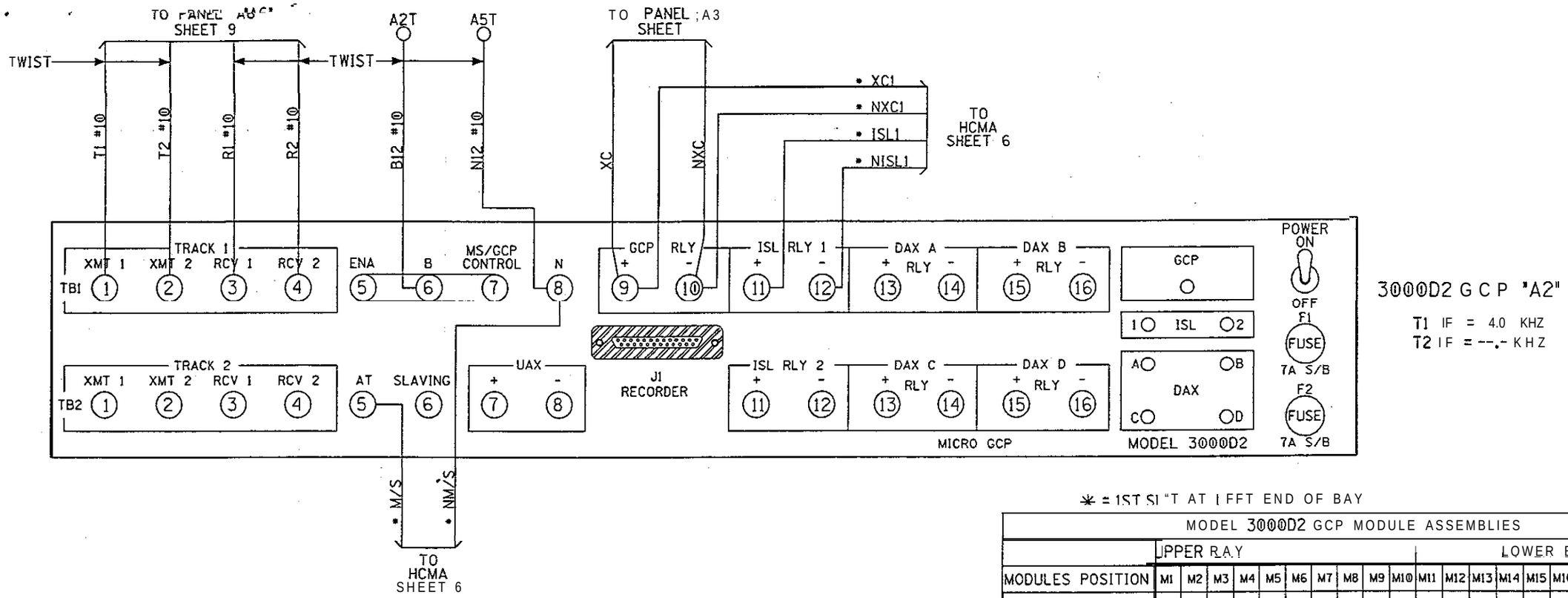

Exhibit B, page 11

* = 1ST SLOT AT LEFT END OF BAY

MODEL 3000D2 GCP MODULE ASSEMBLIES																						
	UPPER BAY										LOWER BAY											
MODULES POSITION	M1	M2	M3	M4	M5	M6	M7	M8	M9	M10	M11	M12	M13	M14	M15	M16	M17	M18	M19	M20	M21
MODULE NUMBERS	80211-f(1)*	80211-f(2)	80012 T/R 1	80012 T/R 2	80013 RLY DRV	80214 PROCS	80015 LOGG	80016 (1) DAX	80016 (2)DAX	80020 +80017	80211-f(1)*	80211-f(2)	80012 T/R 1	80012 T/R 2	80013 RLY DRV	80214 PROCS	80015 LOGG	80016 (1) DAX	80016 (2)DAX	80020 +80017	80028 XFRTMR
MODULES USED	X		X		X	X				X	X		X		X	X				X	X

NOTES:
1 - SEE IPI INSTRUCTION AND INSTALLATION MANUAL FOR 80211 ISLAND CALIBRATION PROCEDURE.

2 - TOGGLE SWITCH ON MOTHER BOARD:
UP = DUAL FREQ.
DOWN = SINGLE FREQ.

3 - ALL WIRING #16AWG UNLESS NOTED OTHERWISE.

* CABLE PROVIDED WITH MONITOR

3000D2 PROGRAMMING	
# OF TKS/TRANSCEIVERS	1
T1 FREQUENCY	348Hz
T2 FREQUENCY	--- Hz
T1 UNI/BIDIRECTIONAL	BI
T2 UNI/BIDIRECTIONAL	---
T1 POWER-MAX/MED	MAX
T2 POWER-MAX/MED	---
T1 PRED/MS	PRED
T2 PRED/MS	----
T1 WARNING TIME	30 Sec
T2 WARNING TIME	-- Sec
T1 APPROACH DIST	2617 Ft
T2 APPROACH DIST	---- Ft
UAX PU DLY (0=OFF)	0 Sec
ENA/UAX PU DLY(0=OFF)	0 Sec
T1 ISL DIST	126 Ft
T2 ISL DIST	---- Ft
# OF DAX'S	0 Ea

DAX A = T1/T2?	TRACK=
DAX A DIST	Ft
DAX A WARN TIME	Sec
DAX B = T1/T2?	TRACK=
DAX B DIST	Ft
DAX B WARN TIME	Sec
DAX C = T1/T2?	TRACK=
DAX C DIST	Ft
DAX C WARN TIME	Sec
DAX D = T1/T2?	TRACK=
DAX D DIST	Ft
DAX D WARN TIME	Sec
MASTER?/SLAVE?	MASTER
PASSWORD NO/YES	NO
RECORDER NO/YES	NO

EXPANDED PROGRAMMING	
T1-SW TO MS AT 10 % OF EZ	
T2-SW TO MS AT -- % OF EZ	
T1-DELAY MS TO GCP	0 Sec
T2-DELAY MS TO GCP	--- Sec
T1 PRIME PRE. OFFSET	0 Ft
T2 PRIME PRE. OFFSET	--- Ft
PRIME PU TIME DELAY	15 Sec
DAX A PU DELAY	Sec
DAX B PU DELAY	Sec
DAX C PU DELAY	Sec
DAX D PU DELAY	Sec
ENHANCED DETECT MODE	OFF
BACK-TO-BACK	OFF
STATION STOP TIMER	10 Sec
T1# OF TRK. WIRES 4/6	4
T2# OF TRK. WIRES 4/6	-
LOW EX ADJUSTMENT	0

PANEL "A2' 3000D2 GCP HOOK-UP

DESIGNED BY: JNS 08-17-99	NORFOLK SOUTHERN		
DRAWN BY: SSC 08-18-99	OFFICE OF ASS'T. VICE PRESIDENT COMM. & SIGNAL, ATLANTA, GA.	M.P.:	D-326.22
CHECKED BY: NT 08-23-99	DECATUR, IL TO PERU, IN SIDNEY, IL FLGS AT CR-2200E		
IN SERVICE:	LAFAYETTE DISTRICT		
	CADD or DWG. No. LFDS32622.05	SHEET No.	5 of 13

PROPERTY
NORFOLK SOUTHERN RA[redacted]

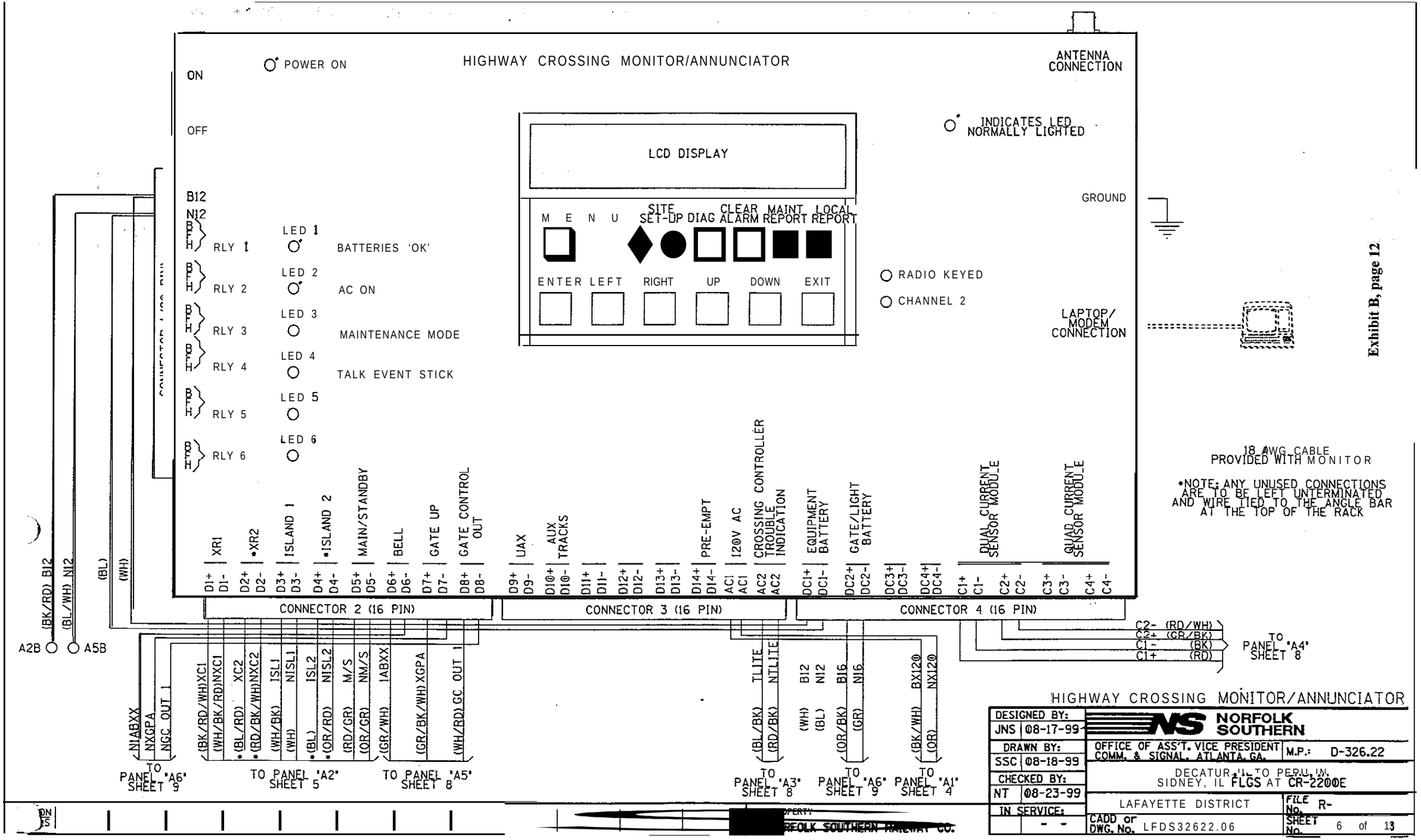

Exhibit B, page 12

SITE SET UP PROCEDURE	
FUNCTION	LED DISPLAY
DATE	- -
TIME	:
DAYLIGHT SAVINGS TIME	
SITE NAME	CR-2200E
DOT NUMBER	479 905B
MILEPOST	D-326.22
HOP ALARMS ?	NO HOP ALARAMS
# OF TRACKS	1

CONTROL SYSTEM CONFIGURATION MENU QUESTIONS	
THE QUESTION	SELECT FROM MENU OPTION
GATES INSTALLED?	GATES INSTALLED
AC/DC POWERED LAMPS?	DC POWERED LAMPS
CROSSING CONTROLLER?	CROSSING CONTROLLER
MAIN/STANDBY GCP?	MASTER/STANDBY
# OF CURRENT SENSOR LOOPS USED?	C1, C2 USED
# OF BATTERY BANKS MONITORED?	TWO BATTERY BANKS
IS THERE A UAX INPUT (IS INPUT 09 WIRE017	NO UAX INSTALLED
ARE ALARMS BROADCAST ON RADIO?	00 NOT TALK ALARMS
ARE AUXILIARY TRACKS MONITORED (IS INPUT D10 WIRED)?	NO AUXILIARY TRACKS
IS THIS UNIT A FRA TESTER?	NO. FRA TESTER
LAMP CONFIGURATION	MAIN=TK1 AND TK2 AUX=AUX
IS BELL DETECTOR INSTALLED?	NO BELL DETECTOR INSTALLED
IS PRE-EMPT CIRCUIT USED?	NO PRE-EMPT CIRCUIT
DOUBLE TRACK ONLY. HOW MANY XR INPUTS?	

SIMPLE/NORMAL

CTG 8-27-99

VERIFY NUMBER OF BULBS	
CURR 1: LAMP SET UP	10 BULBS
CURR 2: LAMP SET UP	10 BULBS
CURR 3: LAMP SET UP	
CURR 4: LAMP SET UP	
SIMPLE OR COMPLEX LAMP CALIBRATION	

VERIFY THE BATTERY SUPPLY VOLTAGES	
BATTERY VOLTAGE AT INPUT DC1	VOLT 1: .
BATTERY VOLTAGE AT INPUT DC2	VOLT 2: .
BATTERY VOLTAGE AT INPUT DC3	VOLT 3: .
BATTERY VOLTAGE AT INPUT DC4	VOLT 4: .

Exhibit B, page 13

HCMA SET UP CHART

DESIGNED BY: JNS 08-17-99	NORFOLK SOUTHERN	
DRAWN BY: SSC 08-18-99	OFFICE OF ASS'T. VICE PRESIDENT COMM. & SIGNAL. ATLANTA, GA.	M.P.: O-326.22
CHECKED BY: 08-23-99	DECATUR, IL TO PERU, IN. SIDNEY. IL FLGS AT CR-2200E	
IN SERVICE: - -	LAFAYETTE DISTRICT	FILE No. R-
	CADD or DWG. No. LFDS32622.07	SHEET No. 7 of 13

PROPERTY NORFOLK SOUTHERN RAILWAY CO.