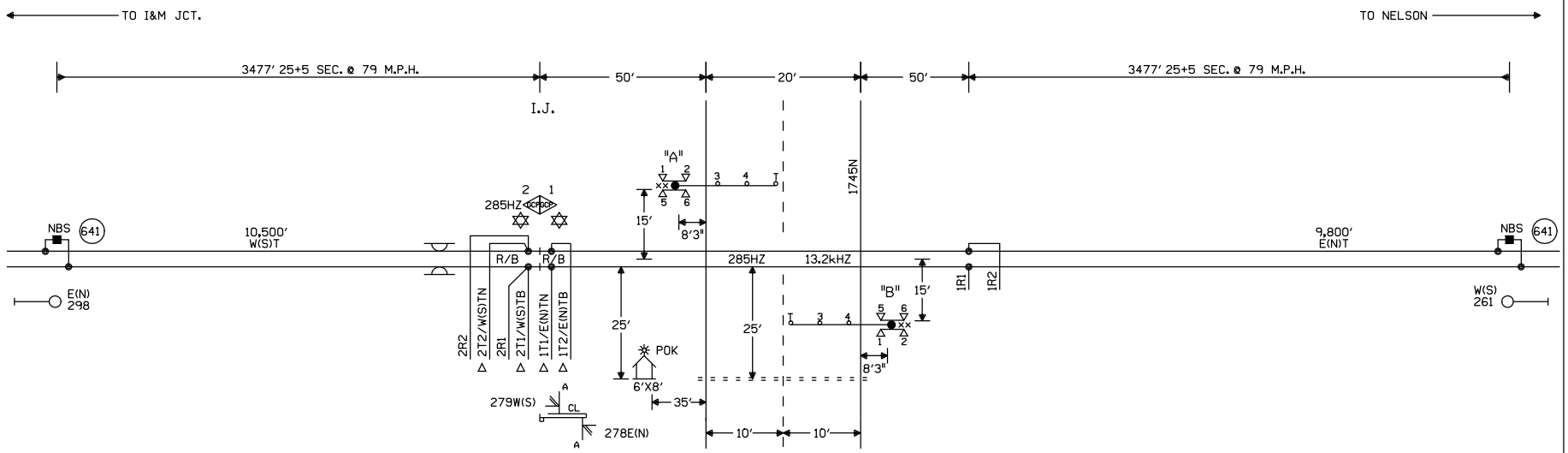

CONNECTS TO M.P. 29.91

CONNECTS TO M.P. 26.05

NOTES:

⊗ = TWISTED WIRES
INSULATED 1 TWIST PER FT.
ALL TRACK WIRES 2C. #6

TRANSMITTER AND RECEIVER LEADS
TO BE SEPARATED BY AT LEAST 12" IN TRENCH,
LENGTHS SHOULD NOT EXCEED MANUFACTURES
RECOMMENDATION.

TOP OF FOUNDATION TO BE AT SAME ELEVATION
AS THE SURFACE OF THE TRAVELED WAY & NO
MORE THAN 4" ABOVE THE SURFACE OF THE GROUND.

ALL BUNGALOW WIRING TO BE #16 AWG FLEX
UNLESS OTHERWISE SPECIFIED EXCEPT ALL GROUND
WIRE TO BE #6 AWG FLEX OR LARGER.

ALL WIRING IN GATE MECHANISM TO BE #10 "AWG FLEX".

REFER TO UP STANDARD DWG FOR BUNGALOW GROUNDING.

PORTABLE GENERATOR EXTENSION CORD
FOR 240V TO 240V IS PROVIDED AS WELL
AS A 120V TO 240V ADAPTER.

ALL LIGHTS TO BE 12" ROUNDELS.

= = = = = = 4" X 40' CONDUIT

LIGHTS: LED LIGHTS

GATE A: 18'
GATE B: 18'

xx = BELL

△ = ENSURE TRACK POLARITY IS TRANSPOSED
ACCROSS ALL INSULATED JOINTS.

W(S) ←—○—→ E(N)

✡ = GCP TO OPERATE IN SEMI-BI
DIRECTIONAL MODE. USE TAB
627 COUPLER.

CONSTRUCTION NOTE:

1. SHOP IS TO WIRE WAYSIDE EQUIPMENT IN CROSSING HOUSE AND CHARGE TO W.O. 83394. FIELD IS NOT TO CUT OVER WAYSIDE EQUIPMENT UNTIL W.O. 83394 IS INSTALLED.

NEW SHEET

					Designed: 12/07/11 INSTALL FLASHERS, GATES AND CWT AT 1745N, M.P.27.90 Rec#: IS: WO#: 12382 /WSD /NST/JTB	MODIFICATION LEVEL Q. A. LAST LEVEL CHECKED DU LAST LEVEL MOD THIS TYPICAL DU LAST LEVEL BY DESIGNER DU CHANGED FROM TYPICAL? Y REV 01.24.11 4K 1TKBG.1	UNION PACIFIC QUALITY PRODUCTIVITY SAFETY SIGNAL DESIGN	Date: 12/07/11 Des: NST Chk: BDF AFE: 12382	UNION PACIFIC RAILROAD MANLIUS, ILLINOIS 1745N PEORIA SUBDIVISION Office of Sr AVP Engineering - Signal/TCO Omaha, Nebraska	Sh.: 1 DOT 175709C MP: 27.90 ID: STL2790.1X

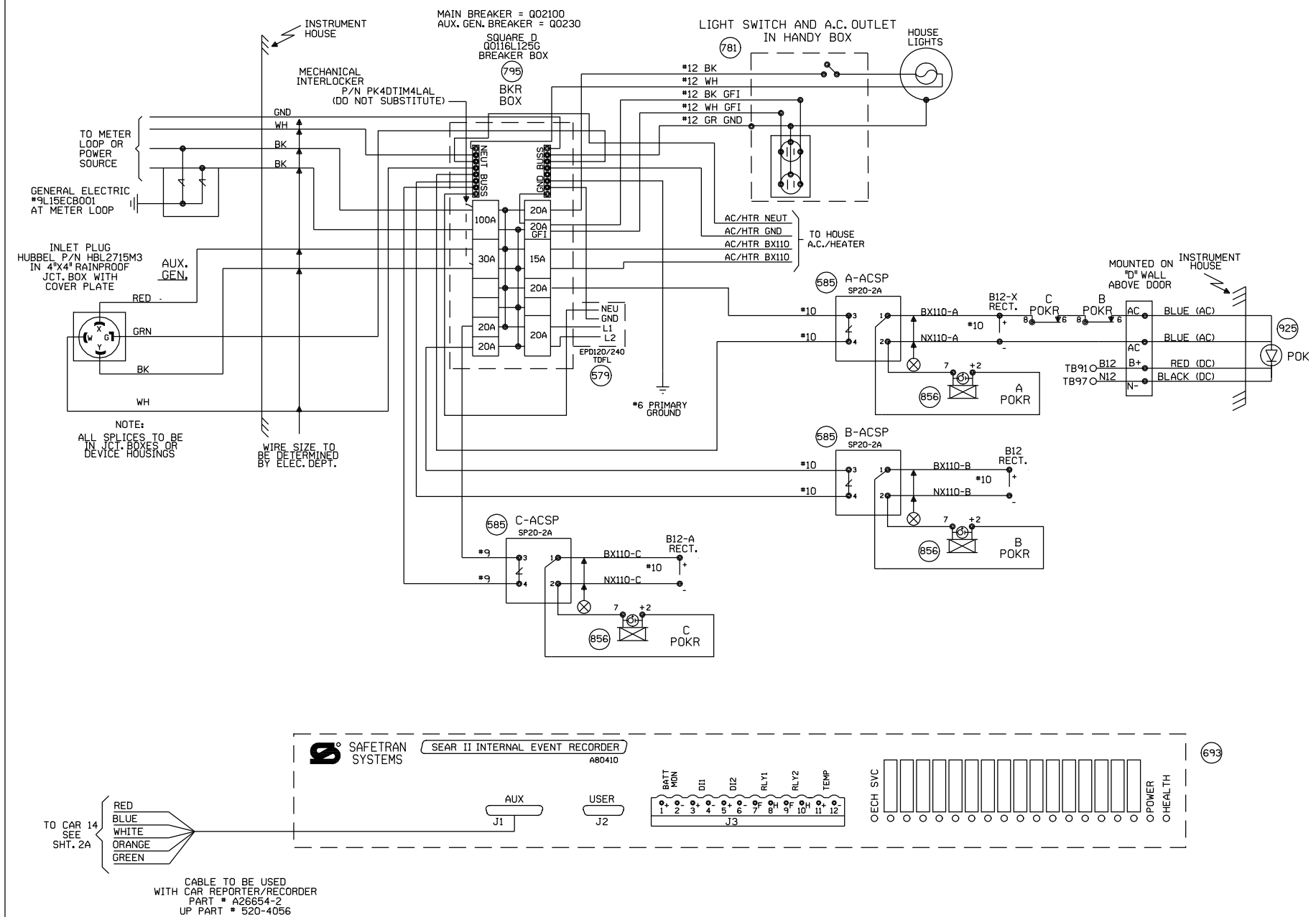

NEW SHEET

					Designed: 12/07/11 INSTALL FLASHERS, GATES AND CWT AT 1745N, M.P.27.90 Rec#: WO#: 12382 IS: /WSD /NST/JTB	MODIFICATION LEVEL		UNION PACIFIC QUALITY PRODUCTIVITY SAFETY SIGNAL DESIGN	Date: 12/07/11 Des: NST Chk: WSD AFE: 12382	UNION PACIFIC RAILROAD MANLIUS, ILLINOIS 1745N PEORIA SUBDIVISION Office of Sr AVP Engineering - Signal/TCO Omaha, Nebraska	Sh.: 2 DOT 175709C MP: 27.90 ID: STL2790.2X
						Q.A. LAST LEVEL CHECKED	DU				
						LAST LEVEL MOD THIS TYPICAL	DU				
						LAST LEVEL BY DESIGNER	DU				
						CHANGED FROM TYPICAL?	Y				
						REV 01.24.11 4K SEARAC.2					

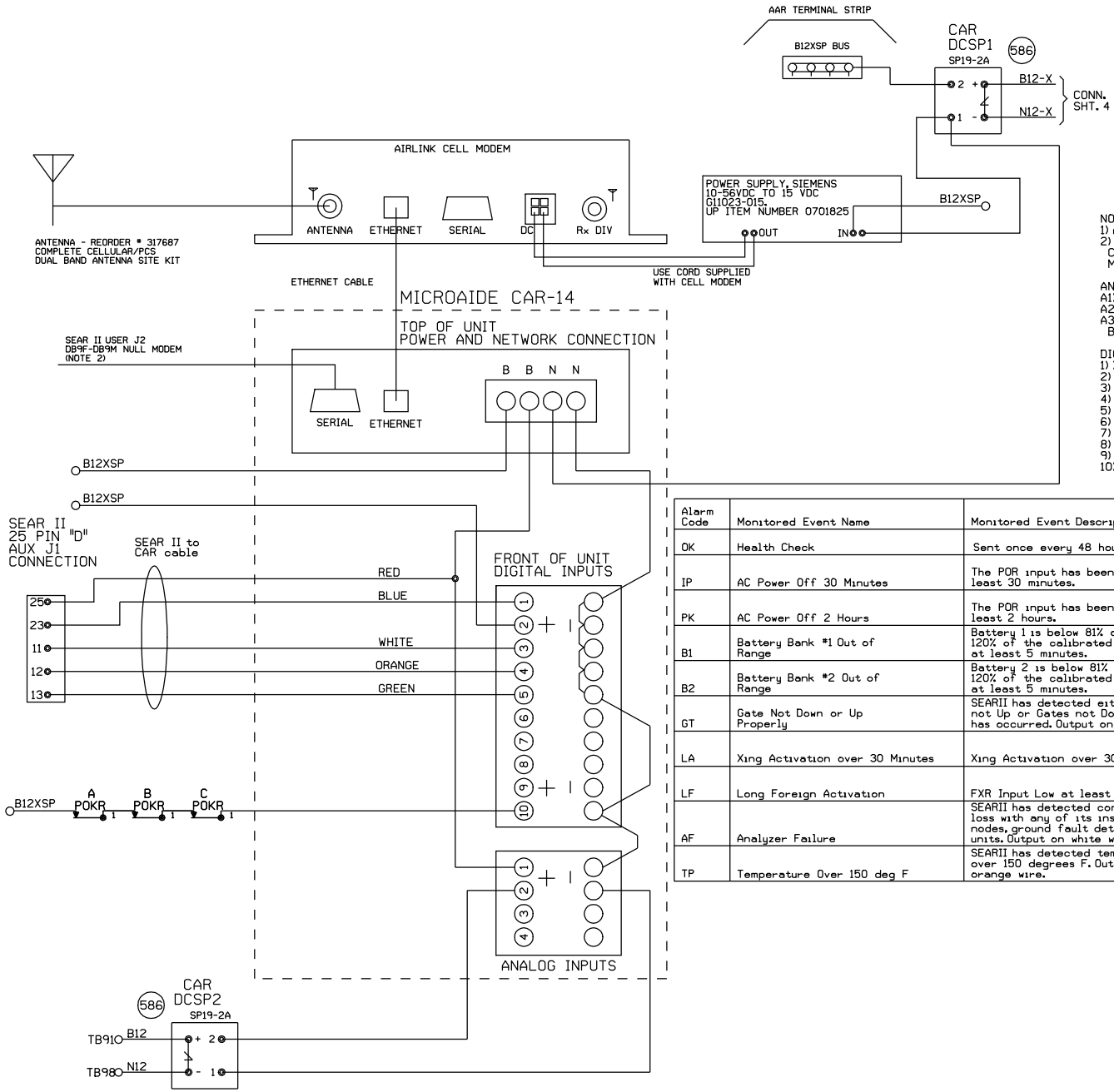

NOTE:
1) AT LOCATIONS WITH NO FOREIGN XR, JUMPER D2 TO B12XSP.
2) THE CAR14 SERIAL PORT IS AVAILABLE TO ADD REMOTE CONNECTIVITY TO THE SEARII. USE A DB9F TO DB9M NULL MODEM SERIAL CABLE.

ANALOG INPUTS:
A1) B12X BATTERY BANK, JUMPERED FROM CAR14 POWER INPUTS
A2) B12 BATTERY BANK
A3) AND A4) ARE AVAILABLE TO MONITOR ADDITIONAL BATTERY BANKS.

DIGITAL INPUTS (LOCATIONS WITH SEARII)
1) XR (BLUE WIRE)
2) FXR (FROM B12XSP THRU FRONT CONTACT)
3) ANALYZER FAILURE (WHITE WIRE)
4) HIGH TEMPERATURE (ORANGE WIRE)
5) GATES NOT UP OR DOWN PROPERLY (GREEN WIRE)
6)
7)
8)
9)
10) POWER OFF INDICATION: POR

Alarm Code	Monitored Event Name	Monitored Event Description	Alarm Cleared
OK	Health Check	Sent once every 48 hours.	
IP	AC Power Off 30 Minutes	The POR input has been down for at least 30 minutes.	The POR input comes back on for at least 5 minutes after an AC Power Off Alarm
PK	AC Power Off 2 Hours	The POR input has been down for at least 2 hours.	The POR input comes back on for at least 5 minutes after an AC Power Off Alarm
B1	Battery Bank #1 Out of Range	Battery 1 is below 81% or above 120% of the calibrated value for at least 5 minutes.	Battery 1 is within acceptable range for at least 5 minutes.
B2	Battery Bank #2 Out of Range	Battery 2 is below 81% or above 120% of the calibrated value for at least 5 minutes.	Battery 2 is within acceptable range for at least 5 minutes.
GT	Gate Not Down or Up Properly	SEARII has detected either a Gates not Up or Gates not Down alarm has occurred. Output on green wire.	The Gate Up or Gates Down indications indicated true after a Gate Not Down or Gate Not Up alarm was triggered.
LA	Xing Activation over 30 Minutes	Xing Activation over 30 Minutes	Crossing has recovered after a Long Activation Alarm had occurred.
LF	Long Foreign Activation	FXR Input Low at least 30 Minutes	FXR Input for 10 Sec.
AF	Analyzer Failure	SEARII has detected communication loss with any of its installed echelon nodes, ground fault detectors, or TSS units. Output on white wire.	Analyzer has recovered after an analyzer failure.
TP	Temperature Over 150 deg F	SEARII has detected temperature over 150 degrees F. Output on orange wire.	Temperature sensor inside SEAR detects temperature is OK after a Hi-Temp alarm.

NEW SHEET

Designed: 12/07/11
INSTALL FLASHERS, GATES AND CWT AT 1745N, M.P.27.90
Rec#: WO#: 12382
IS: /WSD /NST/JTB

MODIFICATION LEVEL	
Q. A. LAST LEVEL CHECKED	DU
LAST LEVEL MOD THIS TYPICAL	DU
LAST LEVEL BY DESIGNER	DU
CHANGED FROM TYPICAL?	Y

REV 01.24.11 4K ACDCCAR14SII.3

UNION PACIFIC
QUALITY PRODUCTIVITY SAFETY
SIGNAL DESIGN

Date: 12/07/11
Des: NST
Chk: WSD
AFE: 12382

UNION PACIFIC RAILROAD
MANLIUS, ILLINOIS
1745N
PEORIA SUBDIVISION
Office of Sr AVP Engineering - Signal/TCO Omaha, Nebraska

Sh.: 2A
DOT 175709C
MP: 27.90
ID: STL2790.2AX

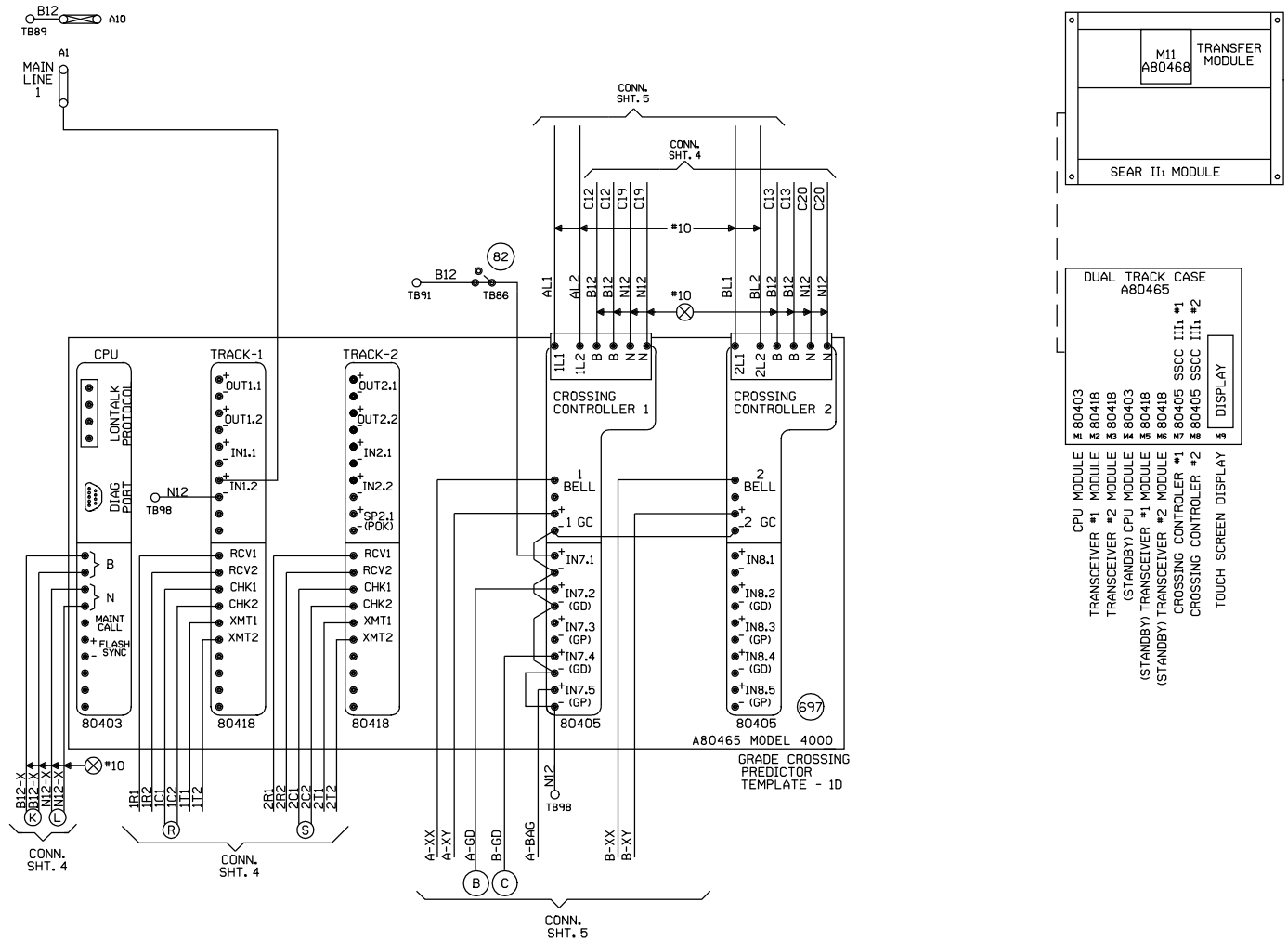

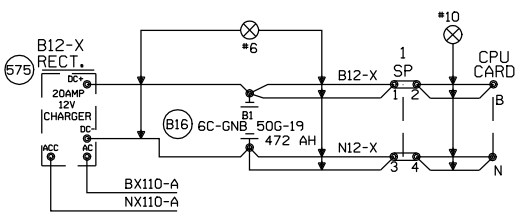

"Mf" FREQUENCY (HZ)	MAXIMUM TRANSMIT WIRE LENGTH (FEET)
86	100
114	125
156	150
211	200
285-970	250

NOTE:
EACH TRANSMITTER TO RAIL WIRE FROM XMT1 AND XMT2 MUST NOT EXCEED THE MAXIMUM LENGTH SPECIFIED IN THE TABLE SHOWN. THE RECEIVER WIRE LENGTH IS NOT CRITICAL. DOES NOT APPLY TO 6 TRACK WIRE APPLICATION.

NEW SHEET

Designed: 12/07/11
INSTALL FLASHERS, GATES AND CWT AT 1745N, M.P.27.90
Rec#: WO#: 12382
IS: /WSD /NST/JTB

MODIFICATION LEVEL	
Q. A. LAST LEVEL CHECKED	DU
LAST LEVEL MOD THIS TYPICAL	DU
LAST LEVEL BY DESIGNER	DU
CHANGED FROM TYPICAL?	Y

REV 01.24.11 4K 2TKGF.3

UNION PACIFIC
QUALITY PRODUCTIVITY SAFETY
SIGNAL DESIGN

Date: 12/07/11
Des: NST
Chk: WSD
AFE: 12382

UNION PACIFIC RAILROAD
MANLIUS, ILLINOIS
1745N
PEORIA SUBDIVISION
Office of Sr AVP Engineering - Signal/TCO Omaha, Nebraska

Sh.: 3
DOT 175709C
MP: 27.90
ID: STL2790.3X

```
Minimum Program Steps Report
----------------------------

Location and SIN
----------------
DOT Number: 175709C
Milepost Number: 27.90
Site Name: MANLIUS, IL

SIN: 762010010016 *

* Parameter is part of office check number calculation.

MCF and Template Selection
--------------------------
MCF Name: GCP-T6X-02-4.mcf
MCF Revision: 24
MCFCRC: 09FC363B

Template = 1D:3 Uni pairs (OCCN) *

* Parameter is part of office check number calculation.

Minimum Program Steps
---------------------
TEMPLATE:  track 1-Uni, Island
Track 1 : GCP Frequency = 285 Hz (Field,TCN)
Track 1 : Approach Distance = 3477 ft (Set in Field,TCN)
Track 1 : Prime Warning Time = 25 sec (OCCN) *
Track 1 : GCP Transmit Level = Medium (Set in Field,TCN)
Track 1 : Uni/Bi/Sim-Bidirnl = Sim. Bidirnl (OCCN) *
Track 1 : Isl Frequency = 13.2 kHz (Set in Field)
Track 1 : Island Distance = 120 ft (Set in Field,TCN)

TEMPLATE:  track 2-Uni,No Island
Track 2 : GCP Frequency = 285 Hz (Field,TCN)
Track 2 : Approach Distance = 3477 ft (Set in Field,TCN)
Track 2 : Prime Warning Time = 25 sec (OCCN) *
Track 2 : GCP Transmit Level = Medium (Set in Field,TCN)
Track 2 : Uni/Bi/Sim-Bidirnl = Sim. Bidirnl (OCCN) *

TEMPLATE:  AND 1 XR
AND 1 Enable Used = Yes (OCCN) *

TEMPLATE:  SSCC
SSCC 1 : Lamp Neutral Test = Off (Set in Field)
SSCC 2 : Lamp Neutral Test = Off (Set in Field)

TEMPLATE:  OOS
OOS Control = OOS IPs (OCCN) *
T2 OOS Control = OOS Input 1 (OCCN) *

TEMPLATE:  IP assignment 1
IN 1.2 = Out Of Service IP 1 (OCCN) *

TEMPLATE:  IP assignment SSCC
IN 7.1 = AND 1 XR Enable (OCCN) *

ADVANCED:  site options
Daylight Savings = On (Set in Field)

* Parameter is part of office check number calculation.

Check Numbers
-------------
Office Check Number: 64C133F1
Config. Check Number: 46E123A6
(Based on MCF Revision 24)

Parameters not part of office check number calculation:

Track 1 : GCP Frequency = 285 Hz
Track 1 : Approach Distance = 3477 ft (Set in Field)
Track 1 : GCP Transmit Level = Medium (Set in Field)
Track 1 : Isl Frequency = 13.2 kHz
Track 1 : Island Distance = 120 ft (Set in Field)
Track 2 : GCP Frequency = 285 Hz
Track 2 : Approach Distance = 3477 ft (Set in Field)
Track 2 : GCP Transmit Level = Medium (Set in Field)
SSCC 1 : Lamp Neutral Test = Off (Set in Field)
SSCC 2 : Lamp Neutral Test = Off (Set in Field)
Daylight Savings = On (Set in Field)

Comments
--------
<none>

Configuration Package File
--------------------------
Filename: STL2790_175709C.pac
```

NEW SHEET

Designed: 12/07/11

INSTALL FLASHERS, GATES AND CWT AT 1745N, M.P.27.90

Rec#: ISs: WO#: 12382 /WSD /NST/JTB

NOTE: Actual OFFSET and ISLAND distances must be verified by field personnel.

UNION PACIFIC SIGNAL DESIGN

Date:	12/07/11
Des:	NST
Chk:	WSD
AFE:	12382

UNION PACIFIC RAILROAD

MANLIUS, ILLINOIS
1745N
PEORIA SUBDIVISION

Office of Sr AVP Engineering - Signal/TCO Omaha, Nebraska

Sh.:	3A
DOT	175709C
MP:	27.90
ID:	STL2790.3AX

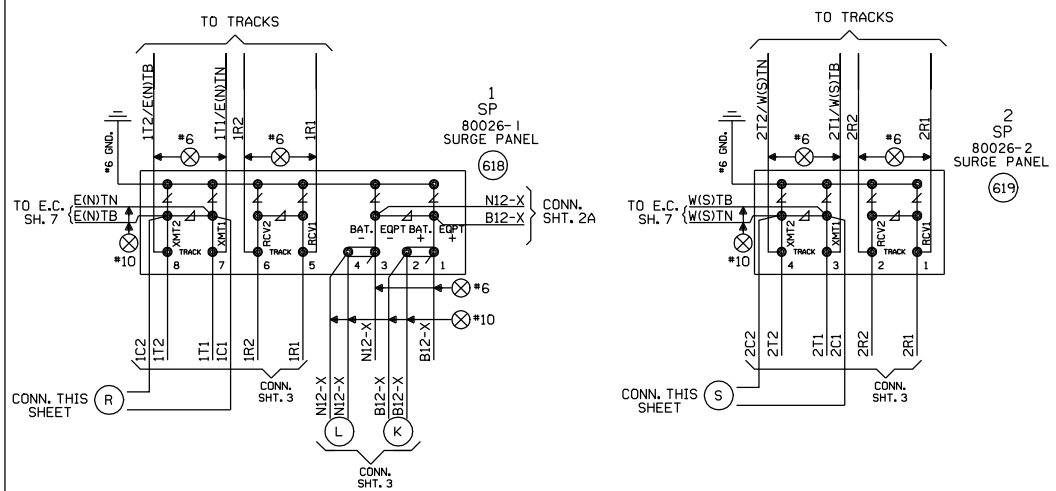

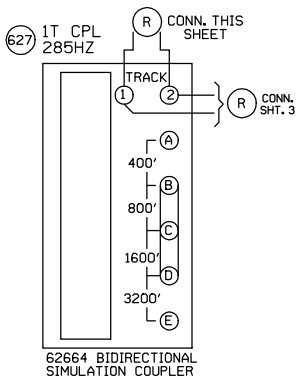

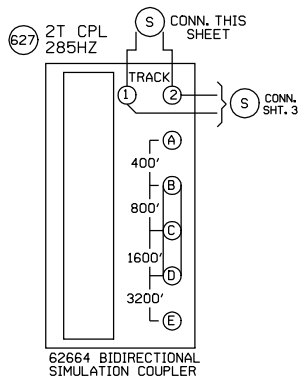

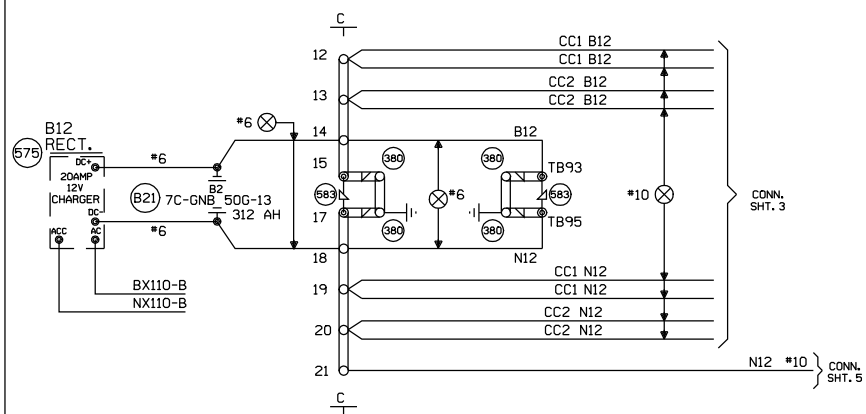

NEW SHEET

				Designed: 12/07/11 INSTALL FLASHERS, GATES AND CWT AT 1745N, M.P.27.90 Rec#: WO#: 12382 ISs: /WSD /NST/JTB	MODIFICATION LEVEL		UNION PACIFIC SAFETY QUALITY PRODUCTIVITY SIGNAL DESIGN	Date: 12/07/11 Des: NST Chk: WSD AFE: 12382	UNION PACIFIC RAILROAD MANLIUS, ILLINOIS 1745N PEORIA SUBDIVISION Office of Sr AVP Engineering - Signal/TCO Omaha, Nebraska	Sh.: 4 DOT 175709C MP: 27.90 ID: STL2790.4X
					Q. A. LAST LEVEL CHECKED	DU			
					LAST LEVEL MOD THIS TYPICAL	DU			
					LAST LEVEL BY DESIGNER	DU			
					CHANGED FROM TYPICAL?	Y			
					rev 01.24.11 4K 4TKSPGFC.4				

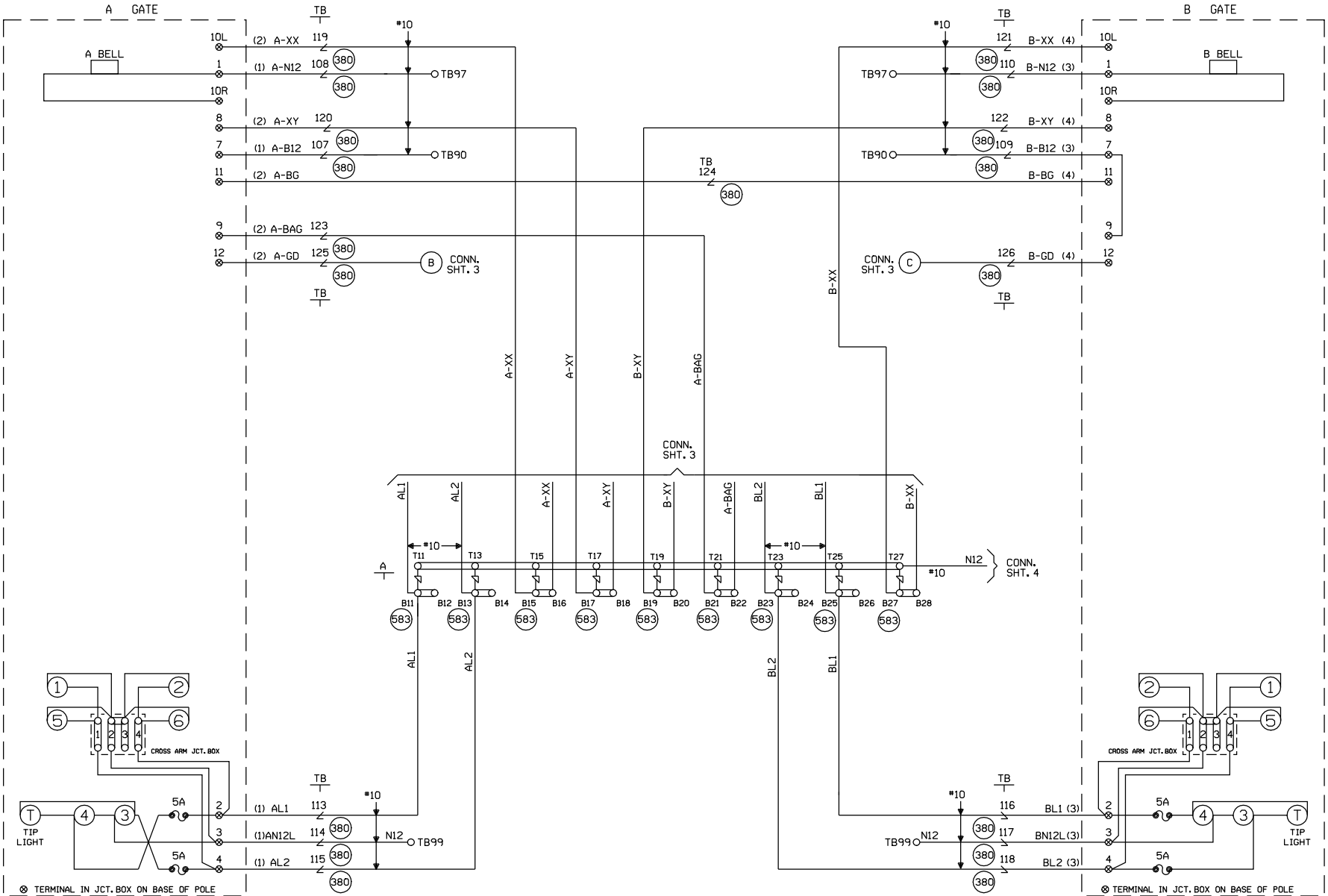

CABLE TABULATION

CABLE NO. 1 5C. NO.6 U.G.B.T. TO GATE A
CABLE NO. 2 7C. NO.14 U.G.B.T. TO GATE A
CABLE NO. 3 5C. NO.6 U.G.B.T. TO GATE B
CABLE NO. 4 7C. NO.14 U.G.B.T. TO GATE B

NEW SHEET

Designed: 12/07/11
INSTALL FLASHERS, GATES AND CWT AT 1745N, M.P.27.90
Rec#: WO#: 12382
IS: /WSD
/ /NST/JTB

MODIFICATION LEVEL	
Q. A. LAST LEVEL CHECKED	DU
LAST LEVEL MOD THIS TYPICAL	DU
LAST LEVEL BY DESIGNER	DU
CHANGED FROM TYPICAL?	Y

REV 01.24.11 4K GFCTYP.5

UNION PACIFIC
QUALITY PRODUCTIVITY SAFETY
SIGNAL DESIGN

Date: 12/07/11
Des: NST
Chk: WSD
AFE: 12382

UNION PACIFIC RAILROAD

MANLIUS, ILLINOIS
1745N
PEORIA SUBDIVISION

Office of Sr AVP Engineering - Signal/TCO Omaha, Nebraska

Sh.: 5
DOT 175709C
MP: 27.90
ID: STL2790.5X

WCH 3593-E

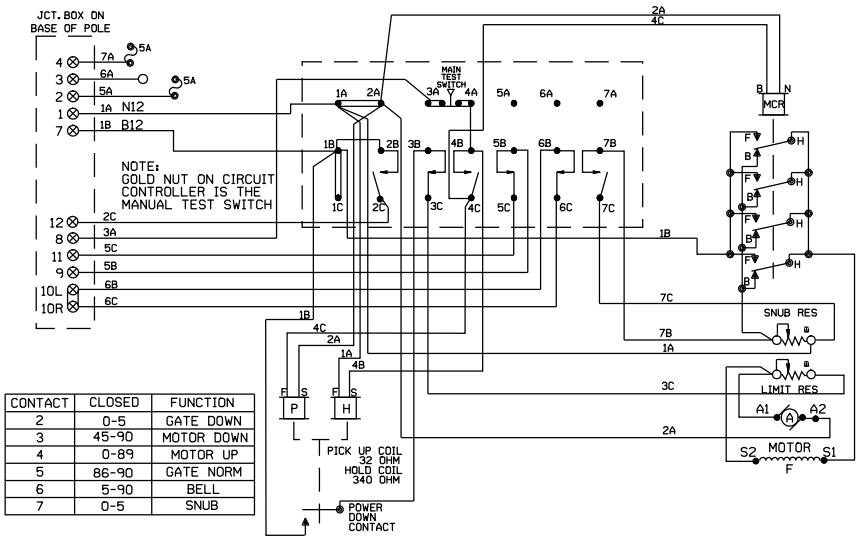

CONTACT	CLOSED	FUNCTION
2	0-5	GATE DOWN
3	45-90	MOTOR DOWN
4	0-89	MOTOR UP
5	86-90	GATE NORM
6	5-90	BELL
7	0-5	SNUB

WCH 3597-E

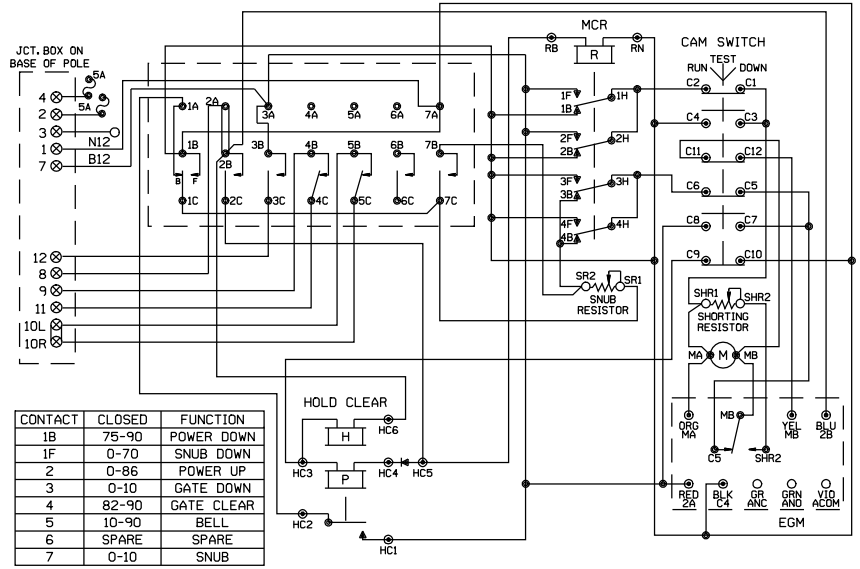

CONTACT	CLOSED	FUNCTION
1B	75-90	POWER DOWN
1F	0-70	SNUB DOWN
2	0-86	POWER UP
3	0-10	GATE DOWN
4	82-90	GATE CLEAR
5	10-90	BELL
6	SPARE	SPARE
7	0-10	SNUB

WCH 3597-RB

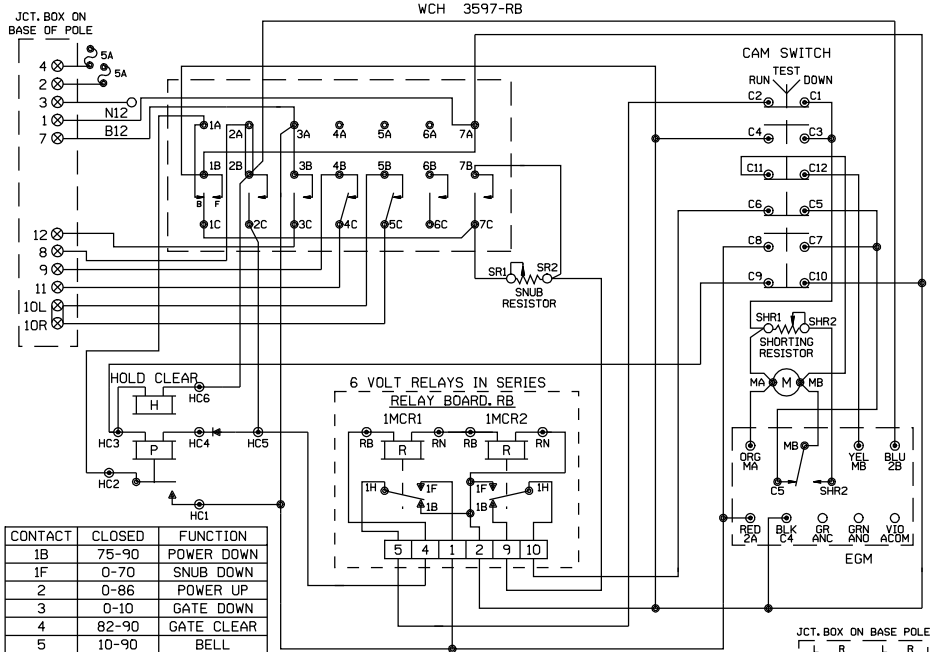

CONTACT	CLOSED	FUNCTION
1B	75-90	POWER DOWN
1F	0-70	SNUB DOWN
2	0-86	POWER UP
3	0-10	GATE DOWN
4	82-90	GATE CLEAR
5	10-90	BELL
6	SPARE	SPARE
7	0-10	SNUB

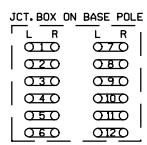

SHOW TYPE MECH. INSTALLED

ALL MECHANISMS SHOWN IN THE CLEAR POSITION

SAFETRAN S-60

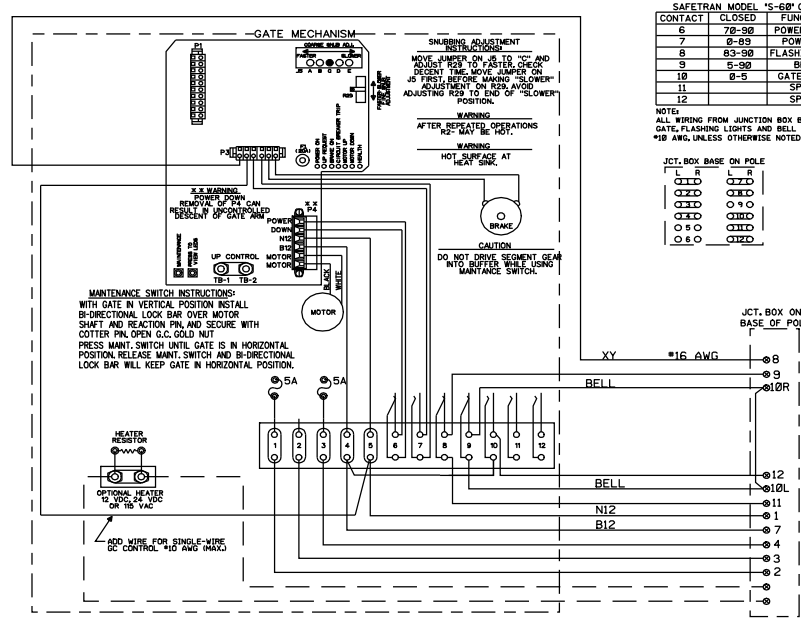

SAFETRAN MODEL 'S-60' GATE

CONTACT	CLOSED	FUNCTION
6	70-90	POWER DOWN
7	0-89	POWER UP
8	83-90	FLASHING LGT.
9	5-90	BELL
10	0-5	GATE DOWN
11		SPARE
12		SPARE

NOTE:
ALL WIRING FROM JUNCTION BOX BASE TO GATE, FLASHING LIGHTS AND BELL IS TO BE #10 AWG, UNLESS OTHERWISE NOTED.

NEW SHEET

Designed: 12/07/11

INSTALL FLASHERS, GATES AND CWT AT 1745N, M.P.27.90

Rec#: IS: WO#: 12382 /WSD /NST/JTB

MODIFICATION LEVEL	
Q.A. LAST LEVEL CHECKED	DU
LAST LEVEL MOD THIS TYPICAL	DU
LAST LEVEL BY DESIGNER	DU
CHANGED FROM TYPICAL?	N

REV 01.24.11 4K GWIRING.7

UNION PACIFIC
QUALITY PRODUCTIVITY SAFETY
SIGNAL DESIGN

Date: 12/07/11
Des: NST
Chk: WSD
AFE: 12382

UNION PACIFIC RAILROAD

MANLIUS, ILLINOIS
1745N
PEORIA SUBDIVISION

Office of Sr AVP Engineering - Signal/TCO Omaha, Nebraska

Sh.: 6
DOT 175709C
MP: 27.90
ID: STL2790.6X

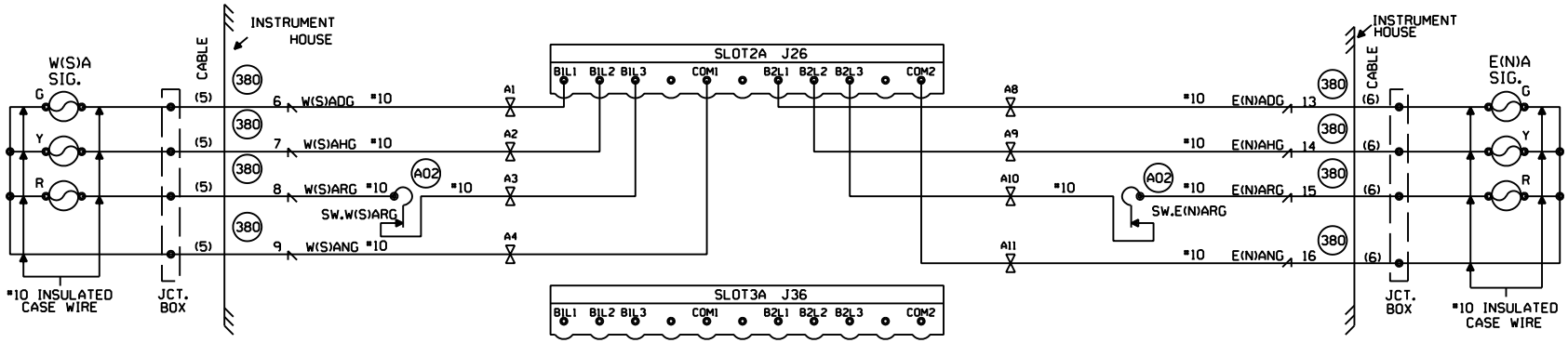

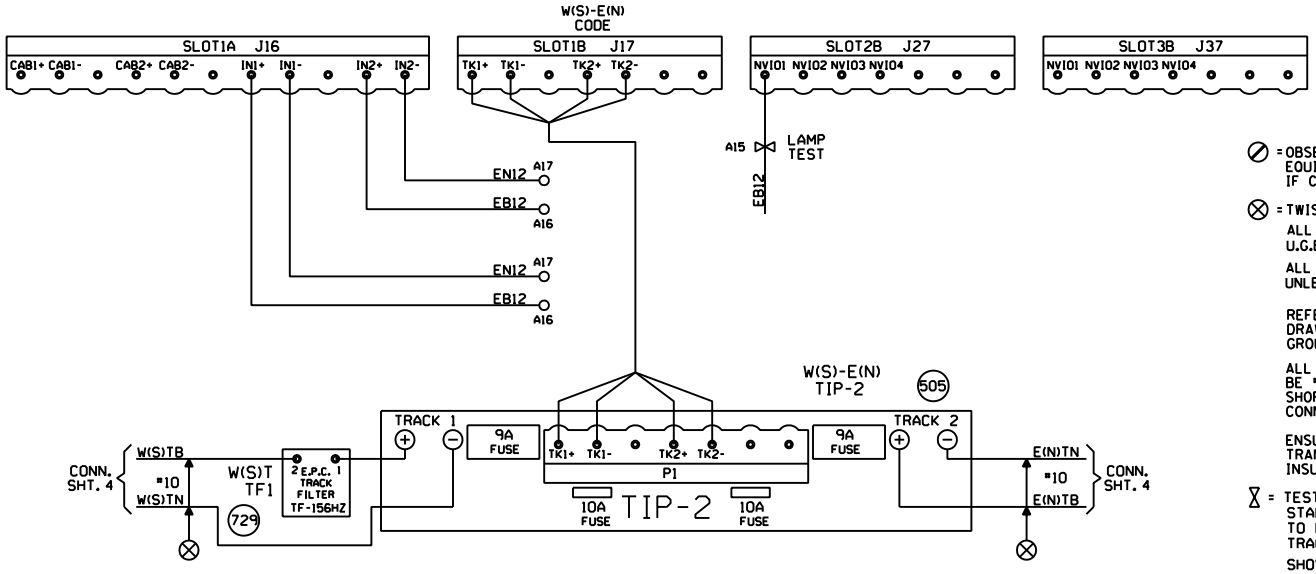

NOTES:

⊘ = OBSERVE CORRECT POLARITY EQUIPMENT WILL BE DAMAGED IF CONNECTIONS ARE REVERSED.

⊗ = TWISTED WIRES.

ALL WIRING TO TRACK 2C.NO.6 U.G.B.T. CABLE

ALL HOUSE WIRING TO BE NO.16 UNLESS OTHERWISE SPECIFIED

REFER TO STANDARDS DRAWING FOR HOUSE GROUNDING SCHEME.

ALL GROUND CONNECTIONS TO BE #6 OR LARGER, SIGNAL WIRING SHOP TO RUN ALL GROUND CONNECTIONS.

ENSURE TRACK POLARITY IS TRANSPOSED ACROSS ALL INSULATED JOINTS.

⧖ = TEST TERMINALS MUST BE INSTALLED ON ALL WIRING CONNECTED TO EXTERNAL CABLES (EXCEPT TRACK AND A.C. POWER WIRES).

SHOW ACTUAL DED INSTALLED LOCATION ON DRAWING.

PORTABLE GENERATOR EXTENSION CORD FOR 240V TO 240V IS PROVIDED AS WELL AS A 120V TO 240V ADAPTER.

CABLE TABULATION

CABLE NO.5-5C.NO.6 HSE. TO SIGNAL 279W(S)A
CABLE NO.6-5C.NO.6 HSE. TO SIGNAL 278E(N)A

NEW SHEET

Designed: 12/07/11
INSTALL FLASHERS, GATES AND CWT AT 1745N, M.P.27.90
Rec#: WO#: 12382
IS: /WSD
/ /NST/JTB

MODIFICATION LEVEL	
Q. A. LAST LEVEL CHECKED	DO
LAST LEVEL MOD THIS TYPICAL	DO
LAST LEVEL BY DESIGNER	DU
CHANGED FROM TYPICAL?	Y

REV 02/01/08 1TE51NTC.1

UNION PACIFIC
QUALITY PRODUCTIVITY SAFETY
SIGNAL DESIGN

Date: 12/07/11
Des: NST
Chk: WSD
AFE: 12382

UNION PACIFIC RAILROAD
MANLIUS, ILLINOIS
1745N
PEORIA SUBDIVISION
Office of Sr AVP Engineering - Signal/TCO Omaha, Nebraska

Sh.: 7
DOT 175709C
MP: 27.90
ID: STL2790.7S

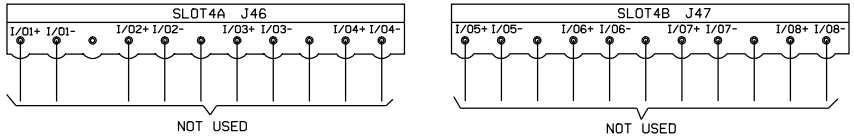

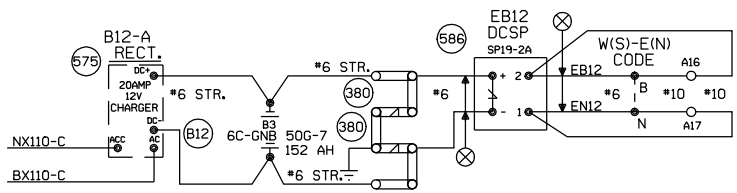

NEW SHEET

					Designed: 12/07/11 INSTALL FLASHERS, GATES AND CWT AT 1745N, M.P.27.90 Rec#: WO#: 12382 IS: /WSD /NST/JTB	MODIFICATION LEVEL		UNION PACIFIC QUALITY PRODUCTIVITY SAFETY SIGNAL DESIGN	Date: 12/07/11 Des: NST Chk: WSD AFE: 12382	UNION PACIFIC RAILROAD MANLIUS, ILLINOIS 1745N PEORIA SUBDIVISION Office of Sr AVP Engineering - Signal/TCO Omaha, Nebraska	Sh.: 8 DOT 175709C MP: 27.90 ID: STL2790.8S
						Q.A. LAST LEVEL CHECKED	DU				
						LAST LEVEL MOD THIS TYPICAL	DU				
						LAST LEVEL BY DESIGNER	DU				
						CHANGED FROM TYPICAL?	Y				
						REV 02/01/08 1TE5INTC.2					

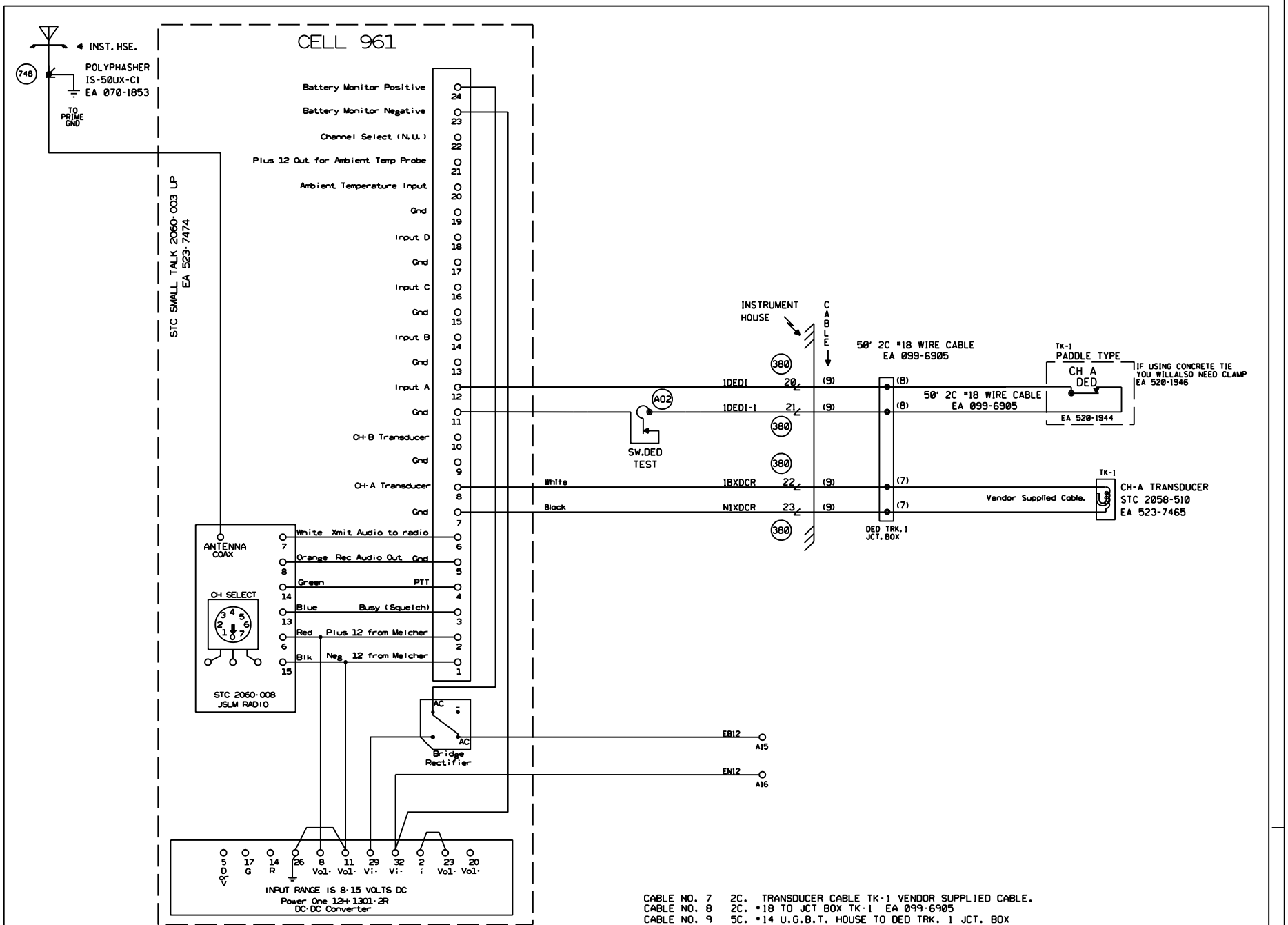

CABLE NO. 7 2C. TRANSDUCER CABLE TK-1 VENDOR SUPPLIED CABLE.
CABLE NO. 8 2C. #18 TO JCT BOX TK-1 EA 099-6905
CABLE NO. 9 5C. #14 U.G.B.T. HOUSE TO DED TRK. 1 JCT. BOX

NEW SHEET

Designed: 12/07/11
INSTALL FLASHERS, GATES AND CWT AT 1745N, M.P.27.90
Rec#: WO#: 12382
IS: /WSD /NST/JTB

MODIFICATION LEVEL	
Q.A. LAST LEVEL CHECKED	DS
LAST LEVEL MOD THIS TYPICAL	DS
LAST LEVEL BY DESIGNER	DU
CHANGED FROM TYPICAL?	Y

Rev 8/20/10 1TEC5INTTLU.5

UNION PACIFIC
QUALITY PRODUCTIVITY SAFETY
SIGNAL DESIGN

Date: 12/07/11
Des: NST
Chk: WSD
AFE: 12382

UNION PACIFIC RAILROAD

MANLIUS, ILLINOIS
1745N
PEORIA SUBDIVISION

Office of Sr AVP Engineering - Signal/TCO Omaha, Nebraska

Sh.: 9
DOT 175709C
MP: 27.90
ID: STL2790.9S

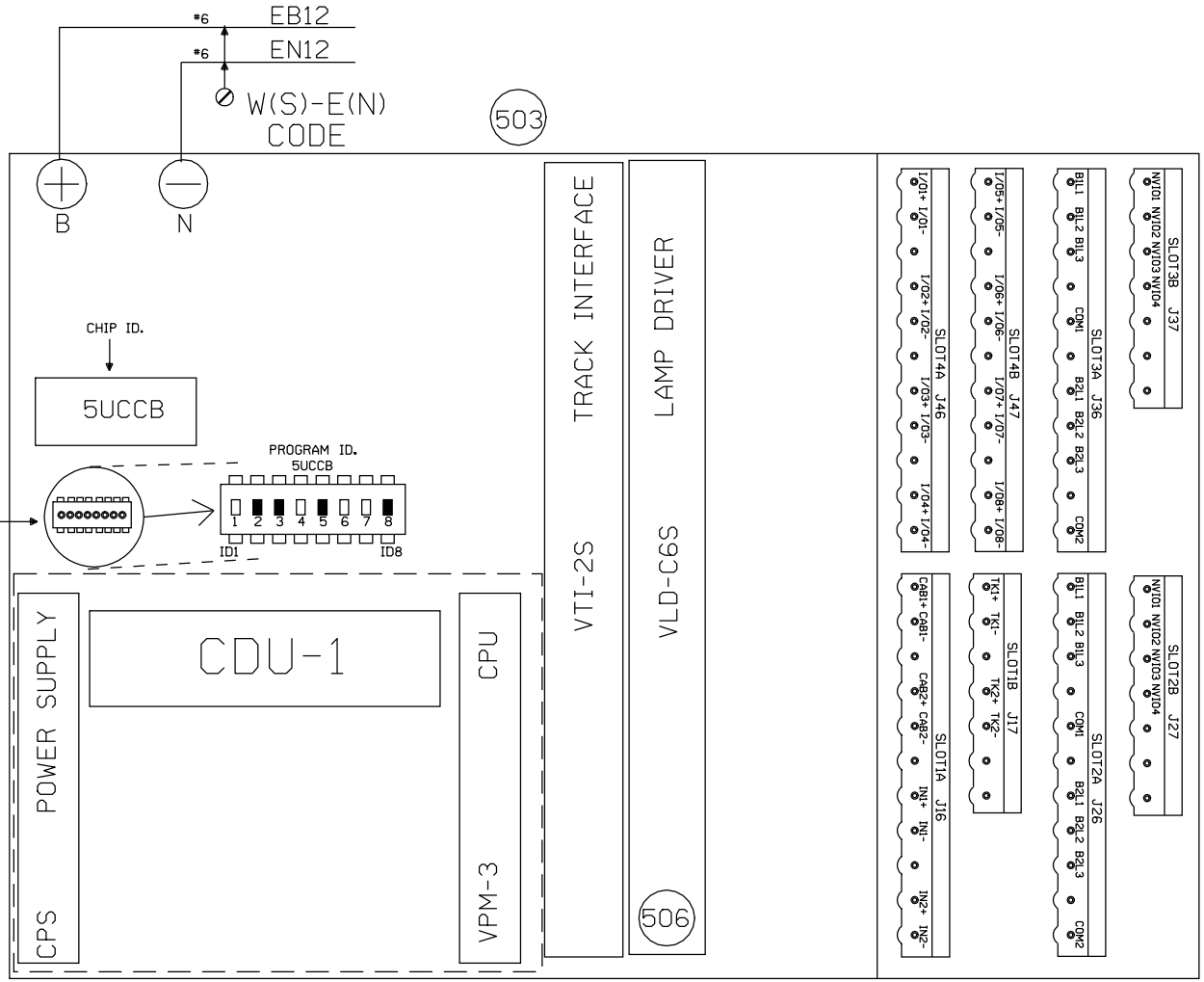

VITAL CONFIGURATION
PROGRAM SETTINGS

UCCB	TRUE
UCCBE	FALSE
UCCBW	FALSE
UCCBEW	FALSE

CODE 5
OPERATION SETTINGS

LC1SW FALSE	L ALT-5 FALSE
LC5SW FALSE	R ALT-5 FALSE
RC1SW TRUE	
RC5SW FALSE	

NEW SHEET

Designed: 12/07/11
INSTALL FLASHERS, GATES AND CWT AT 1745N, M.P.27.90
Rec#: WO#:12382
IS: WSD / /NST/JTB

MODIFICATION LEVEL	
Q. A. LAST LEVEL CHECKED	DQ
LAST LEVEL MOD THIS TYPICAL	DQ
LAST LEVEL BY DESIGNER	DU
CHANGED FROM TYPICAL?	Y

rev 02/01/08 1TE5INTC.3

UNION PACIFIC
QUALITY PRODUCTIVITY SAFETY
SIGNAL DESIGN

Date: 12/07/11
Des: NST
Chk: WSD
AFE: 12382

UNION PACIFIC RAILROAD
MANLIUS, ILLINOIS
1745N
PEORIA SUBDIVISION
Office of Sr AVP Engineering - Signal/TCO Omaha, Nebraska

Sh.: 10
DOT 175709C
MP: 27.90
ID: STL2790.10S

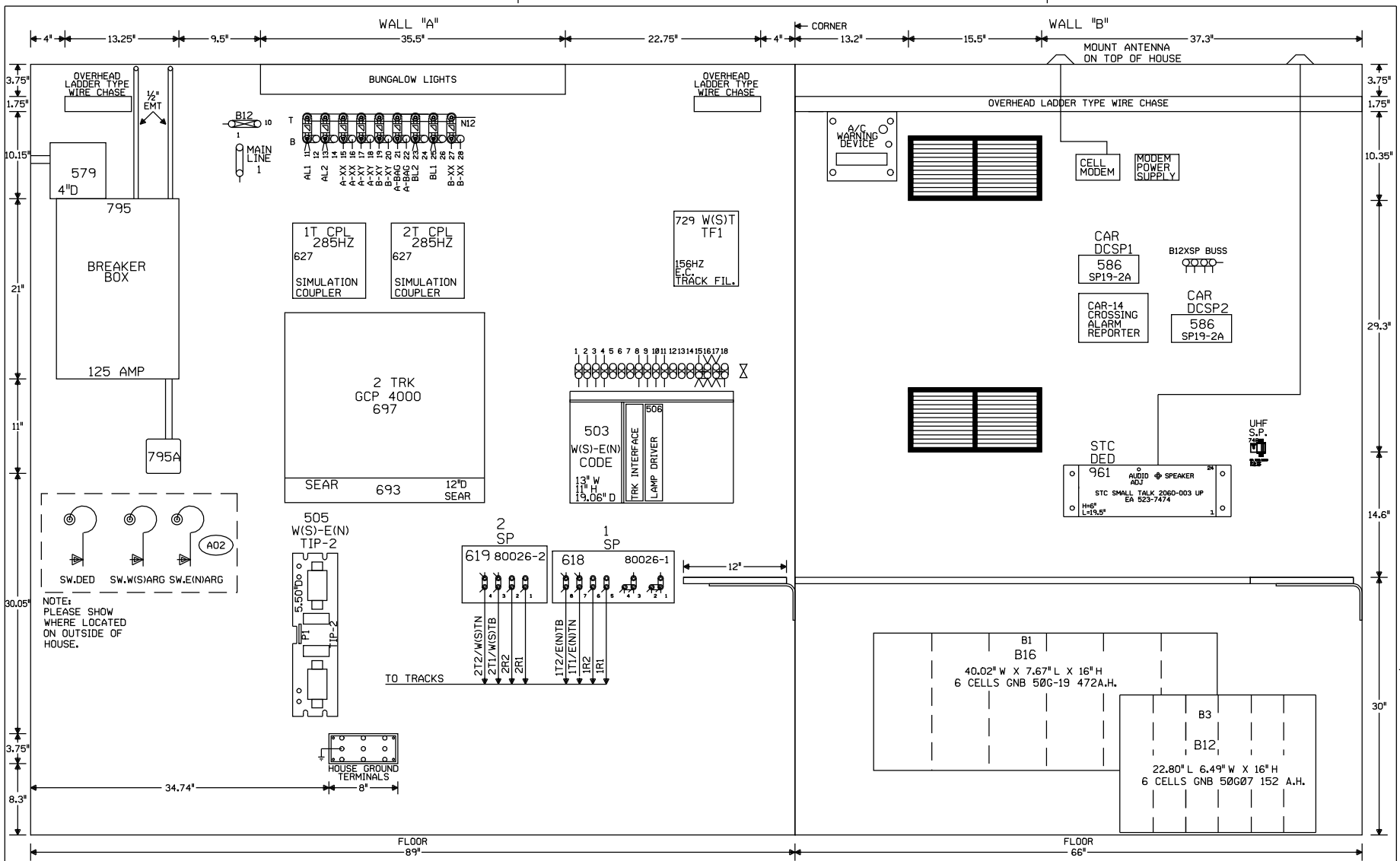

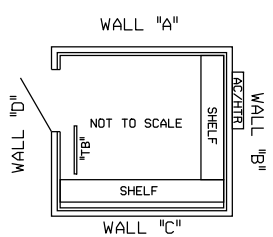

NOTE: ALL DIMENSIONS SHOWN ARE APPROXIMATE.

NEW SHEET

Designed: 12/07/11
INSTALL FLASHERS, GATES AND CWT AT 1745N, M.P.27.90
Rec#: WO#: 12382
IS: /WSD /NST/JTB

UNION PACIFIC
QUALITY PRODUCTIVITY SAFETY
SIGNAL DESIGN

Date:	12/07/11
Des:	NST
Chk:	WSD
AFE:	12382

UNION PACIFIC RAILROAD
MANLIUS, ILLINOIS
1745N
PEORIA SUBDIVISION
Office of Sr AVP Engineering - Signal/TCO Omaha, Nebraska

Sh.:	11
DOT	175709C
MP:	27.90
ID:	STL2790.11X

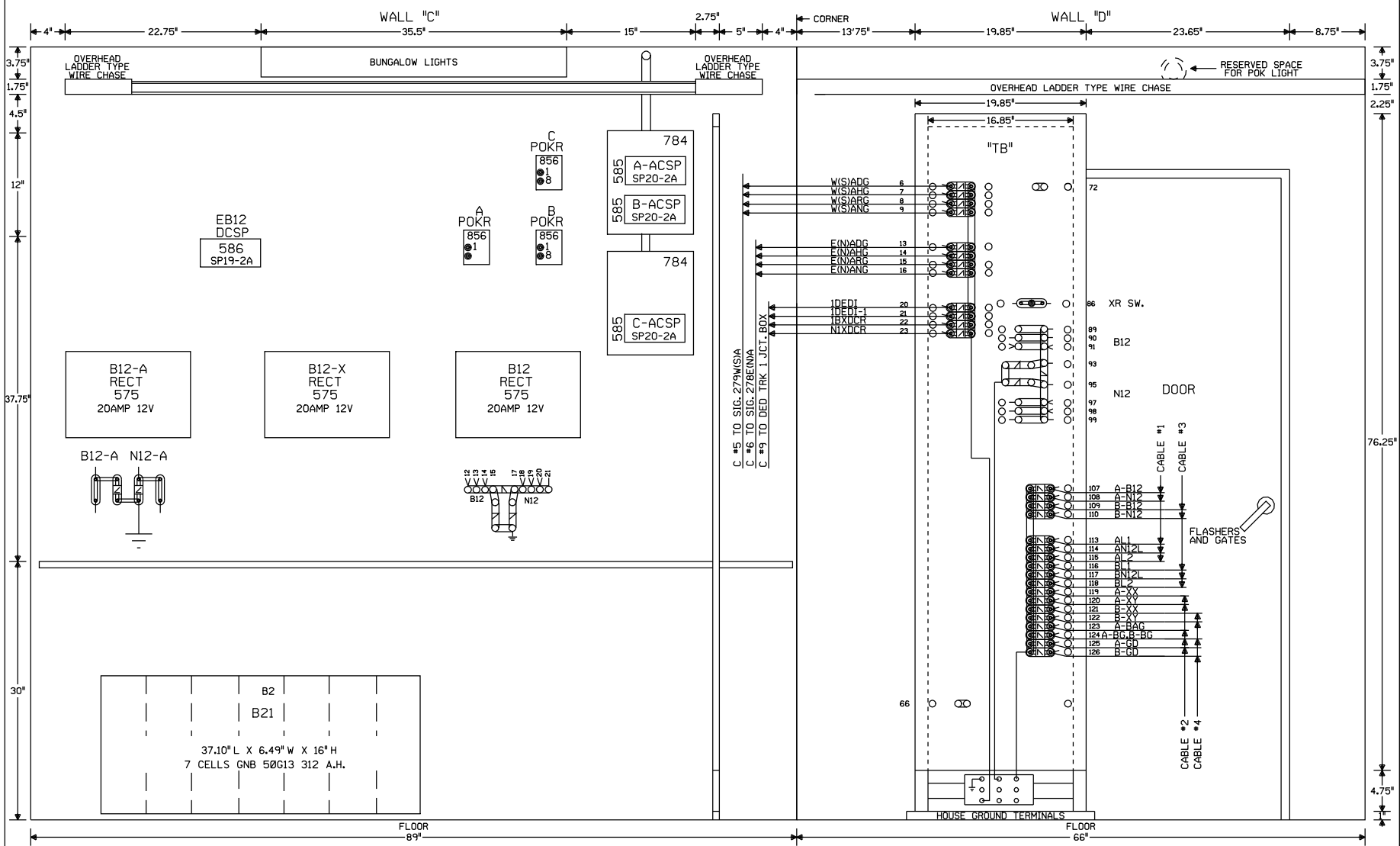

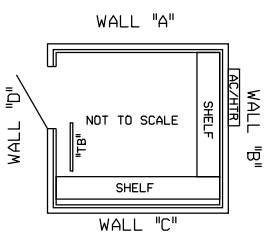

NOTE: ALL DIMENSIONS SHOWN ARE APPROXIMATE.

NEW SHEET

Designed: 12/07/11

INSTALL FLASHERS, GATES AND CWT AT 1745N, M.P.27.90

Req#: ISs: WO#: 12382 /WSD /NST/JTB

UNION PACIFIC

QUALITY PRODUCTIVITY SAFETY

SIGNAL DESIGN

Date:	12/07/11
Dest:	NST
Chk:	WSD
AFE:	12382

UNION PACIFIC RAILROAD

MANLIUS, ILLINOIS
1745N
PEORIA SUBDIVISION

Office of Sr AVP Engineering - Signal/TCO Omaha, Nebraska

Sh.:	12
DOT	175709C
MP:	27.90
ID:	STL2790.12X