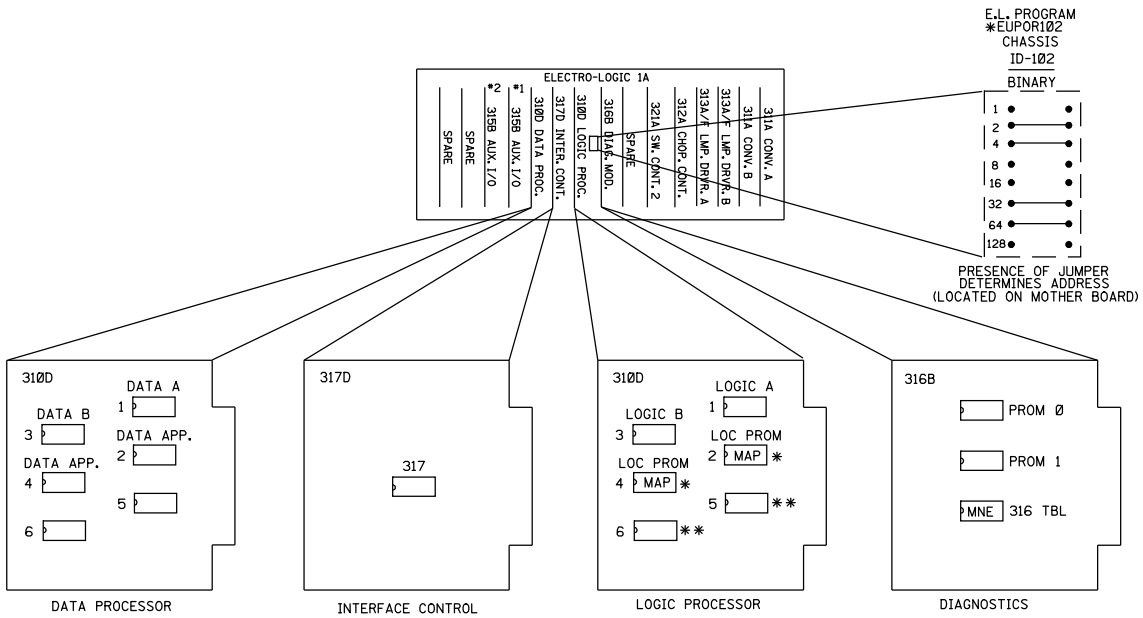

	CHKSUM	CRC	REV LEVEL	
DATA A	0F38	3266	03	
DATA B	D594	B6B1	03	
(2EA) DATA APP	1F32	5B3F	NC	
317	9FC5	C4C8	A	
LOGIC A	EB8B	64FC	02	
LOGIC B	F494	7E2B	02	
* (2EA) LOC PROM	53A9	2B02	E	* EUPOR102.MAP
** (OPTIONAL) (2EA) DATA APP				* .MAP
316 PROM 0	5F0C	98DE	03	
316 PROM 1	6580	49F1	03	
* 316 TBL	8E68	C739	E	* EUPOR102.MNE

NOTE:

1. ALL ELECTRO-LOGIC MODULES ARE INTERCHANGEABLE. THE LOC. PROMS AND THE 316 TBL PROM ARE UNIQUE TO ONE LOCATION ONLY. DO NOT ATTEMPT TO USE AT ANY OTHER LOCATION.
2. ASR TIME= 8'00"

* = PROMS SUPPLIED BY DESIGN OFFICE

PEORIA SUBDIVISION
CP P44
END OF SIDING
SIGNALS E&W (N&S)
M.P. 44.52
8'X10' HOUSE

= IN
= OUT

NEW SHEET

Designed: 11/03/11
INSTALL FLASHERS, GATES AND CWT AT 100N, M.P. 45.53.
Rec#: WO#: 11990
IS: /JTB
/NST/JTB

1 7/20/07
INSTALL ELECTROCODE FROM M.P. 43.00 TO M.P. 61.00
PHASE 1
A.F.E. 83395 DLD/RCB
/ /SSS/RCB

MODIFICATION LEVEL	
Q. A. LAST LEVEL CHECKED	DE
LAST LEVEL MOD THIS TYPICAL	DO
LAST LEVEL BY DESIGNER	DP
CHANGED FROM TYPICAL?	Y

REV 06/22/06 ELOREEOS.14

UNION PACIFIC
QUALITY PRODUCTIVITY SAFETY
SIGNAL DESIGN

DES:	SSS
DIG:	SSS
CHK:	DLD
A.F.E.	83395
ID= STL4452.14S	

UNION PACIFIC RAILROAD
NELSON, ILLINOIS
TO I&M JCT., ILLINOIS
C.T.C. CIRCUITS
Office of AVP Engineering - Design Omaha, Nebraska

DATE 7/20/07
SHEET 14
DWG 44.52
STL

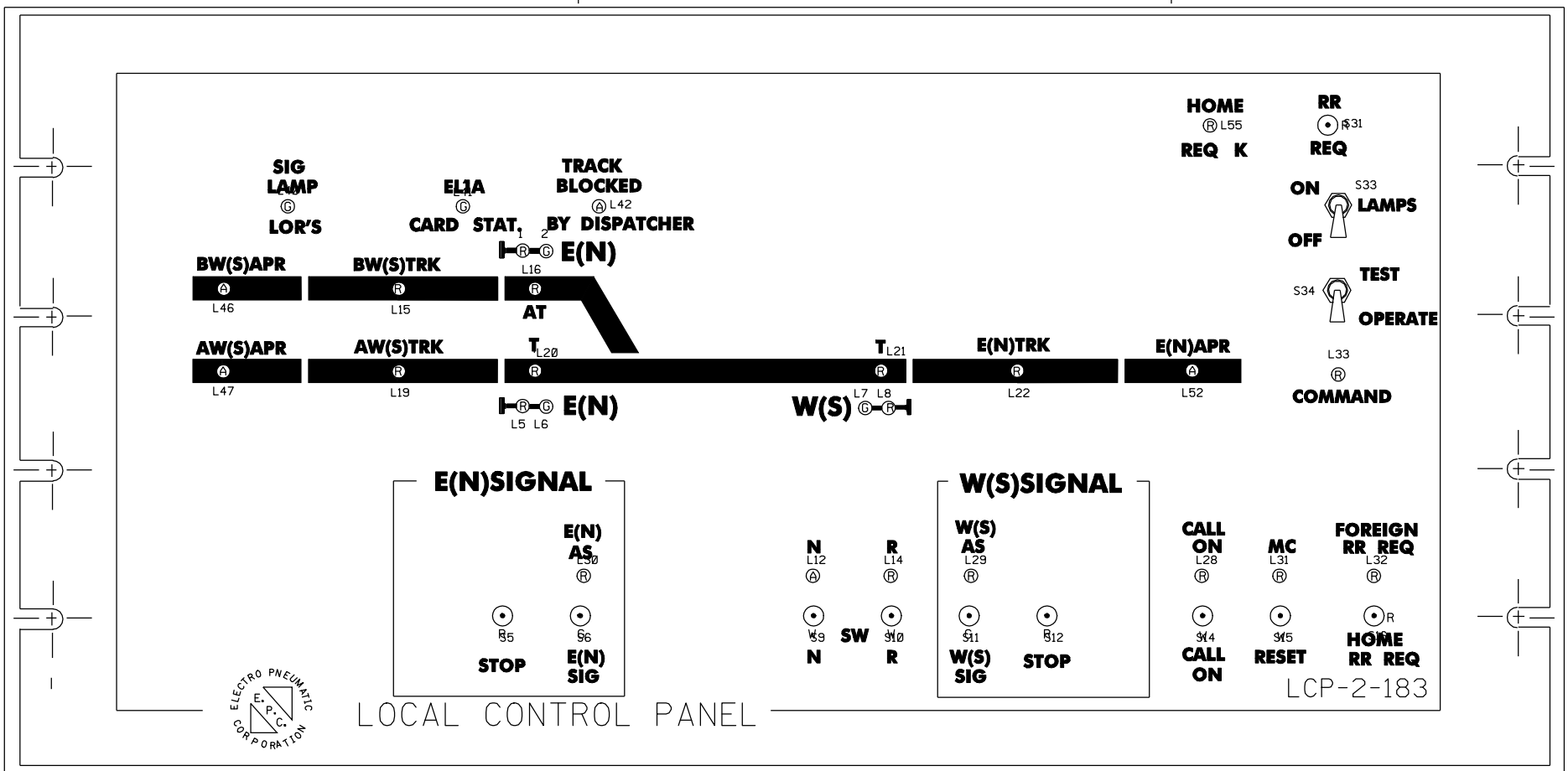

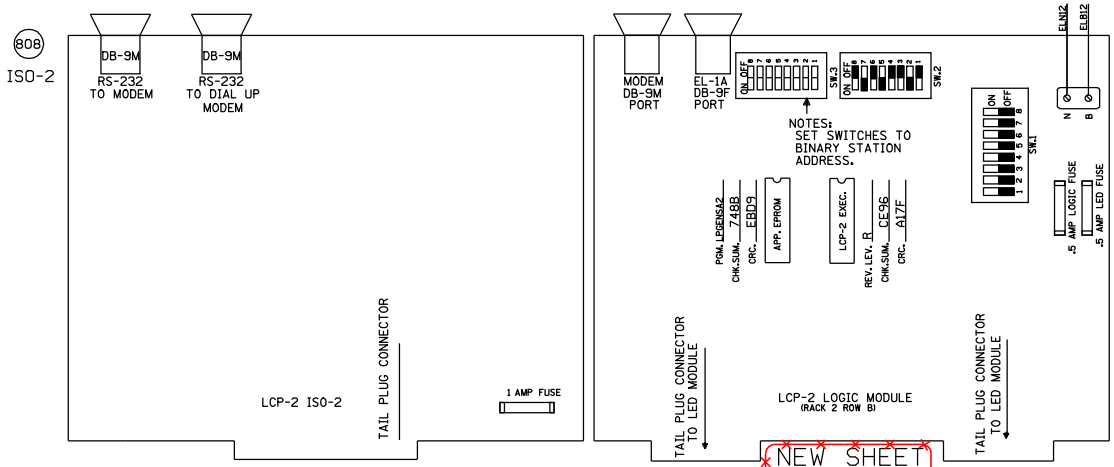

(RACK 2 ROW B)

SW. 2 SETTINGS

MODEM PORT BAUD RATE

	1	2	3	4
75 BAUD	0	0	0	X
150 BAUD	1	0	0	X
300 BAUD	0	1	0	X
600 BAUD	1	1	0	X
1200 BAUD	0	0	1	X
2400 BAUD	1	0	1	X
4800 BAUD	0	1	1	X
9600 BAUD	1	1	1	X
1 STOP BIT	X	X	X	0
2 STOP BIT	X	X	X	1

317 PORT BAUD RATE

	5	6	7	8
75 BAUD	0	0	0	X
150 BAUD	1	0	0	X
300 BAUD	0	1	0	X
600 BAUD	1	1	0	X
1200 BAUD	0	0	1	X
2400 BAUD	1	0	1	X
4800 BAUD	0	1	1	X
9600 BAUD	1	1	1	X
1 STOP BIT	X	X	X	0
2 STOP BIT	X	X	X	1

SW. 1 SETTINGS

NORMAL OPERATION OF ANY SYSTEM REQUIRES ALL POSITIONS ON SWITCH ONE TO BE OFF.

NOTES:

SIG LAMP LOR'S - ON IF NO LIGHT OUTS ON WAYSIDE SIGNALS.

EL1A CARD STAT - ON IF CARDS IN ELECTROLOGIC ARE OPERATIONAL

"AS" INDICATIOR LIGHTS

ON IF NO TIME RUNNING
OFF IF SIGNAL CLEAR
FLASHING IF IN TIME.

APR LIGHTS - CODE 5 INDICATOR LIGHTS

TRK LIGHTS - CODE 1 TRACK LIGHTS.

FLASHING TRACK LIGHTS - TRACK BLOCK BY DISPATCHER

PROMS SUPPLIED BY DESIGN OFFICE

= IN
= OUT

PEORIA SUBDIVISION
CP P44
END OF SIDING
SIGNALS E&W (N&S)
M.P. 44.52
8'X10' HOUSE

Designed: 11/03/11
INSTALL FLASHERS, GATES AND CWT AT 100N, M.P. 45.53.
Rec#: WO#: 11990
IS: /JTB /NST/JTB

1 7/20/07
INSTALL ELECTROCODE FROM M.P. 43.00 TO M.P. 61.00
PHASE 1
A.F.E. 83395 DLD/RCB /SSS/RCB

MODIFICATION LEVEL

Q. A. LAST LEVEL CHECKED	DE
LAST LEVEL MOD THIS TYPICAL	DO
LAST LEVEL BY DESIGNER	DP
CHANGED FROM TYPICAL?	N

REV 06/22/06 ELOREEOS.15

UNION PACIFIC
QUALITY PRODUCTIVITY SAFETY
SIGNAL DESIGN

DES:	SSS
DIG:	SSS
CHK:	DLD
A.F.E.	83395
ID= STL4452.15S	

UNION PACIFIC RAILROAD
NELSON, ILLINOIS
TO I&M JCT., ILLINOIS
C.T.C. CIRCUITS
Office of AVP Engineering - Design Omaha, Nebraska

DATE 7/20/07
SHEET 15
DWG 44.52
STL

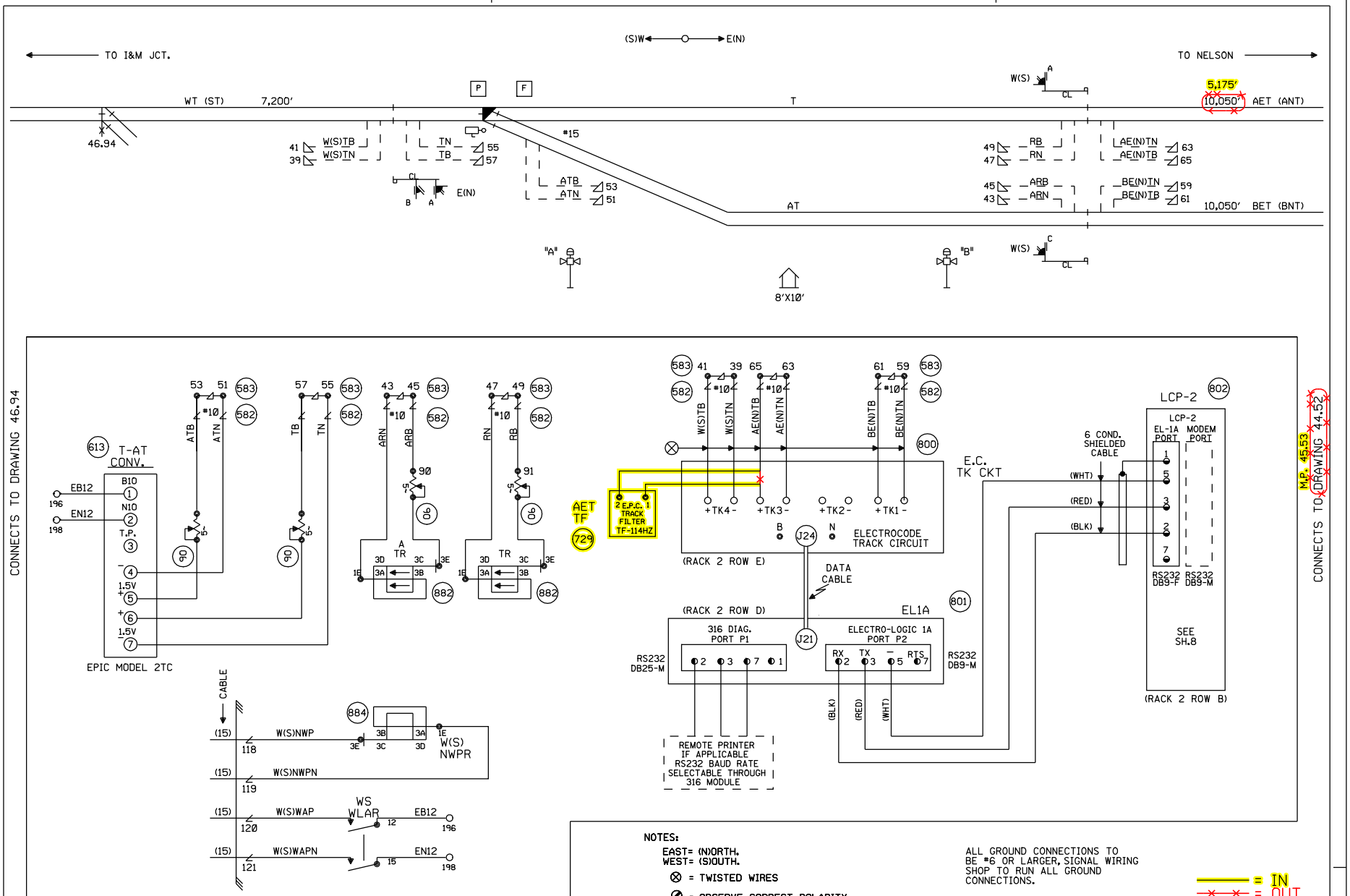

NOTES:

EAST= (N)ORTH.
WEST= (S)OUTH.

⊗ = TWISTED WIRES

⊘ = OBSERVE CORRECT POLARITY. EQUIPMENT WILL BE DAMAGED IF CONNECTIONS ARE REVERSED

ALL WIRING TO TRACK 2C. NO.6 U.G.B.T. CABLE ALL CASE WIRING TO BE NO.16 UNLESS OTHERWISE SPECIFIED.

FOR CABLE TABULATION SEE SH. 3

ALL GROUND CONNECTIONS TO BE #6 OR LARGER, SIGNAL WIRING SHOP TO RUN ALL GROUND CONNECTIONS.

ENSURE TRACK POLARITY IS TRANSPOSED ACROSS ALL INSULATED JOINTS.

⧖ = TEST TERMINALS MUST BE INSTALLED ON ALL WIRING CONNECTED TO EXTERNAL CABLES (EXCEPT TRACK AND A.C. POWER WIRES).

——— = IN
—×—×— = OUT

PEORIA SUBDIVISION
CP P46
END OF SIDING
SIGNALS E&W (N&S)
M.P. 46.57
8'X10' HOUSE

NEW SHEET

Designed: 11/03/11
INSTALL FLASHERS, GATES AND CWT AT 100N, M.P. 45.53.
Rec#: IS: WO#: 11990 /JTB /NST/JTB

1 7/20/07
INSTALL ELECTROCODE FROM M.P. 43.00 TO M.P. 61.00 PHASE 1
A.F.E. 83395 DLD/RCB /SSS/RCB

MODIFICATION LEVEL	
Q. A. LAST LEVEL CHECKED	DE
LAST LEVEL MOD THIS TYPICAL	DO
LAST LEVEL BY DESIGNER	DP
CHANGED FROM TYPICAL?	Y

REV 02/01/06 ELORWEOS.1

UNION PACIFIC
QUALITY PRODUCTIVITY SAFETY
SIGNAL DESIGN

DES:	SSS
DIG:	SSS
CHK:	DLD
A.F.E.	83395
ID= STL4657.1S	

UNION PACIFIC RAILROAD

NELSON, ILLINOIS
TO I&M JCT., ILLINOIS
C.T.C. CIRCUITS

Office of AVP Engineering - Design Omaha, Nebraska

DATE 7/20/07
SHEET 1
DWG 46.57
STL

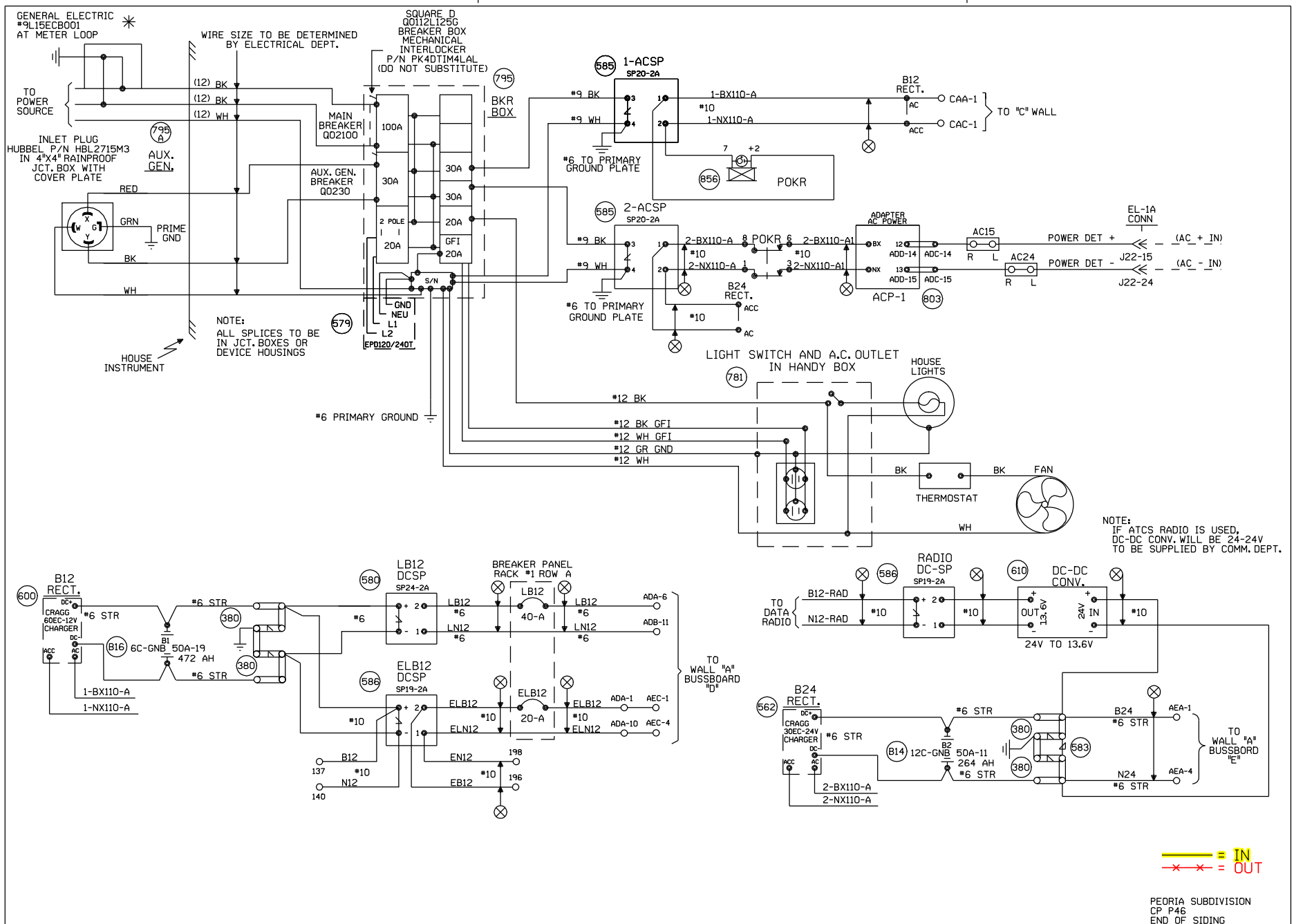

				Designed: 11/03/11 INSTALL FLASHERS, GATES AND CWT AT 100N, M.P. 45.53. Rec#: IS: WO#: 11990 /JTB /NST/JTB	1 7/20/07 INSTALL ELECTROCODE FROM M.P. 43.00 TO M.P. 61.00 PHASE 1 A.F.E. 83395 DLD/RCB / /SSS/RCB	MODIFICATION LEVEL		UNION PACIFIC QUALITY PRODUCTIVITY SAFETY SIGNAL DESIGN	DES: SSS DIG: SSS CHK: DLD A.F.E. 83395 ID: STL4657.2S	UNION PACIFIC RAILROAD NELSON, ILLINOIS TO I&M JCT., ILLINOIS C.T.C. CIRCUITS Office of AVP Engineering - Design Omaha, Nebraska	DATE 7/20/07 SHEET 2 DWG 46.57 STL
						Q. A. LAST LEVEL CHECKED	DE				
						LAST LEVEL MOD THIS TYPICAL	DO				
						LAST LEVEL BY DESIGNER	DP				
						CHANGED FROM TYPICAL? REV 02/01/06 ELORWEOS.2	Y				

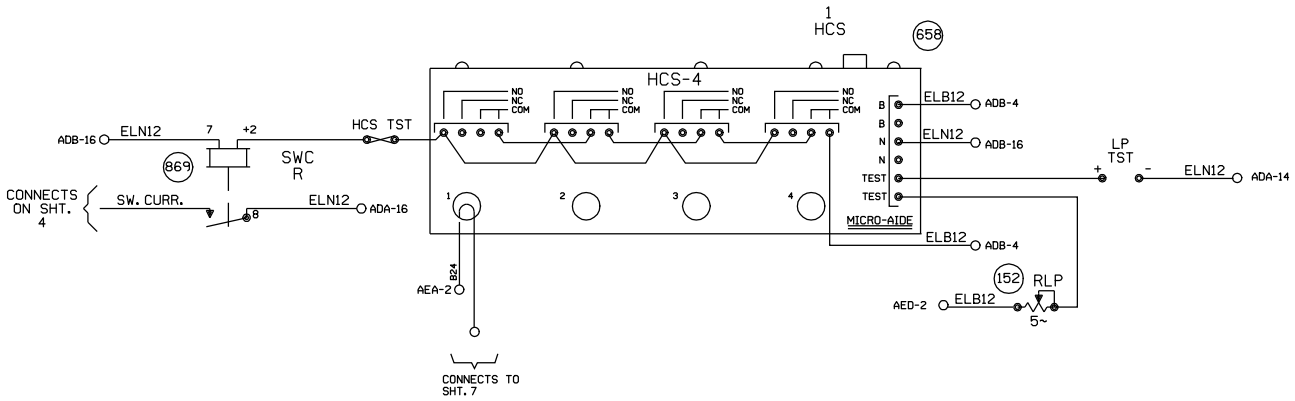

= IN
= OUT

PEORIA SUBDIVISION
CP P46
END OF SIDING
SIGNALS E&W (N&S)
M.P. 46.57
8'X10' HOUSE

NEW SHEET

Designed: 11/03/11
INSTALL FLASHERS, GATES AND CWT AT 100N, M.P. 45.53.
Rec'd: WO#: 11990
IS: /JTB
/ /NST/JTB

1 7/20/07
INSTALL ELECTROCODE
FROM M.P. 43.00
TO M.P. 61.00
PHASE 1
A.F.E. 83395 DLD/RCB
/ /SSS/RCB

MODIFICATION LEVEL	
Q. A. LAST LEVEL CHECKED	DE
LAST LEVEL MOD THIS TYPICAL	DO
LAST LEVEL BY DESIGNER	DP
CHANGED FROM TYPICAL?	N

REV 02/01/86 ELDRWEDS.2A

UNION PACIFIC
QUALITY PRODUCTIVITY SAFETY
SIGNAL DESIGN

DES: SSS
DIG: SSS
CHK: DLD
A.F.E. 83395
ID= STL4657.2AS

UNION PACIFIC RAILROAD

NELSON, ILLINOIS
TO I&M JCT., ILLINOIS
C.T.C. CIRCUITS

Office of AVP Engineering - Design Omaha, Nebraska

DATE 7/20/07
SHEET 2A
DWG 46.57
STL

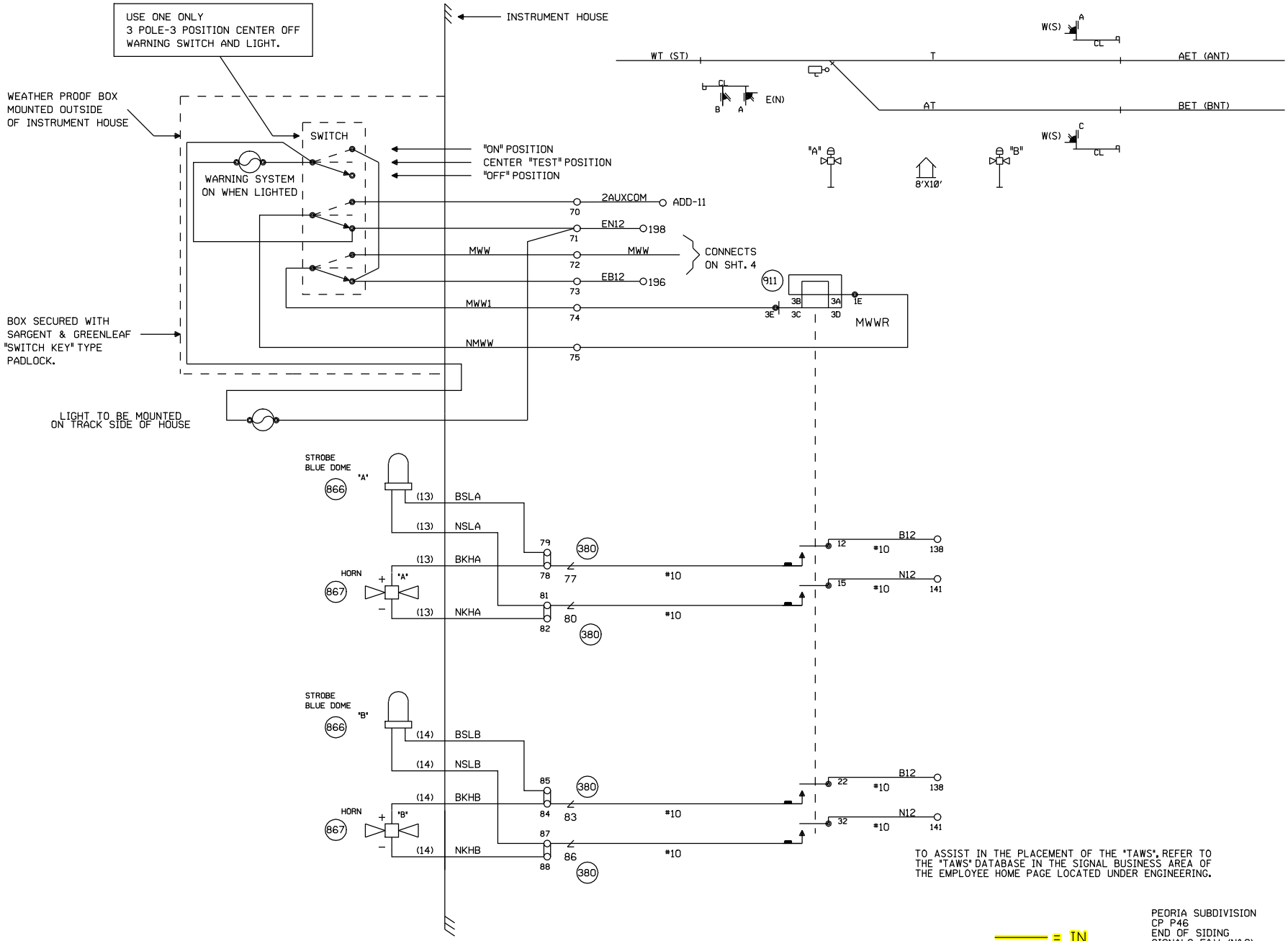

NEW SHEET

Designed: 11/03/11

INSTALL FLASHERS, GATES AND CWT AT 100N, M.P. 45.53.

Rec#: WO#: 11990
IS: /JTB
/ /NST/JTB

L 7/20/07
INSTALL ELECTROCODE
FROM M.P. 43.00
TO M.P. 61.00
PHASE 1
A.F.E. 83395 DLD/RCB
/ /SSS/RCB

MODIFICATION LEVEL	
O. A. LAST LEVEL CHECKED	DE
LAST LEVEL MOD THIS TYPICAL	DO
LAST LEVEL BY DESIGNER	DP
CHANGED FROM TYPICAL?	Y
REV 02/01/86 ELORWEOS.2B	

UNION PACIFIC
QUALITY PRODUCTIVITY SAFETY
SIGNAL DESIGN

DES:	SSS
DIG:	SSS
CHK:	DLD
A.F.E.	83395
ID= STL4657.2BS	

UNION PACIFIC RAILROAD

NELSON, ILLINOIS
TO I&M JCT., ILLINOIS
C.T.C. CIRCUITS

Office of AVP Engineering - Design Omaha, Nebraska

DATE 7/20/07
SHEET 28
DWG 46.57
STL

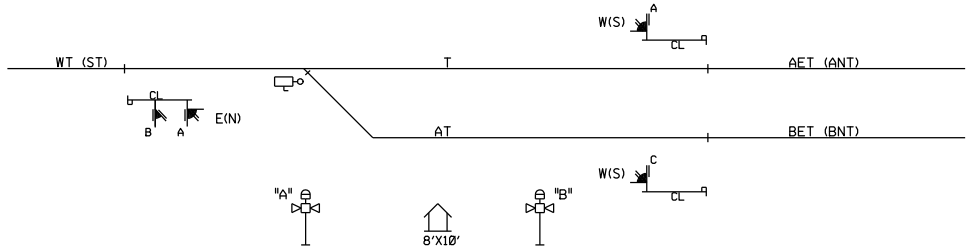

CABLE TABULATION

CABLE NO. 1	5C.NO. 6 U.G.B.T. HOUSE TO SIG. W(S)C
CABLE NO. 2	5C.NO. 6 U.G.B.T. HOUSE TO SIG. E(N)A
CABLE NO. 3	5C.NO. 6 U.G.B.T. HOUSE TO SIG. E(N)B
CABLE NO. 4	5C.NO. 6 U.G.B.T. HOUSE TO SIG. W(S)A
CABLE NO. 5	5C.NO. 6 U.G.B.T. HOUSE TO SW.
CABLE NO. 6	7C.NO.14 U.G.B.T. HOUSE TO SW.
CABLE NO. 7	12C.NO.14 U.G.B.T. HOUSE TO SW. HTR. CONTR.
CABLE NO. 8	3C 2/0 W/GND. CONTR. TO POWER SERVICE.
CABLE NO. 9	7C.NO.14 U.G.B.T. CONTR. TO P JCT. BOX.
CABLE NO.10	5C.NO. 6 U.G.B.T. CONTR. TO P JCT. BOX.
CABLE NO.11	5C.NO. 6 U.G.B.T. CONTR. TO F JCT. BOX.
CABLE NO.12	TO BE DETERMINED BY NATIONAL STANDARD ELECTRICAL CODE
CABLE NO.13	5C.NO. 6 U.G.B.T. HOUSE TO TAWS 'A'
CABLE NO.14	5C.NO. 6 U.G.B.T. HOUSE TO TAWS 'B'
CABLE NO.15	7C.NO. 14 TO M.P. 46.94

= IN
= OUT

PEORIA SUBDIVISION
CP P46
END OF SIDING
SIGNALS E&W (N&S)
M.P. 46.57
8'X10' HOUSE

NEW SHEET

Designed: 11/03/11
INSTALL FLASHERS, GATES AND CWT AT 100N, M.P. 45.53.
Rec'd: WO's 11990
IS: /JTB
/ /NST/JTB

1 7/20/07
INSTALL ELECTROCODE
FROM M.P. 43.00
TO M.P. 61.00
PHASE 1
A.F.E. 83395 DLD/RCB
/ /SSS/RCB

MODIFICATION LEVEL	
Q. A. LAST LEVEL CHECKED	DE
LAST LEVEL MOD THIS TYPICAL	DO
LAST LEVEL BY DESIGNER	DP
CHANGED FROM TYPICAL?	Y
REV 02/01/86 ELORWEOS.3	

UNION PACIFIC
QUALITY PRODUCTIVITY SAFETY
SIGNAL DESIGN

DES:	SSS
DIG:	SSS
CHK:	DLD
A.F.E.	83395
ID= STL4657.3S	

UNION PACIFIC RAILROAD

NELSON, ILLINOIS
TO I&M JCT., ILLINOIS
C.T.C. CIRCUITS

Office of AVP Engineering - Design Omaha, Nebraska

DATE 7/20/07
SHEET 3
DWG 46.57
STL

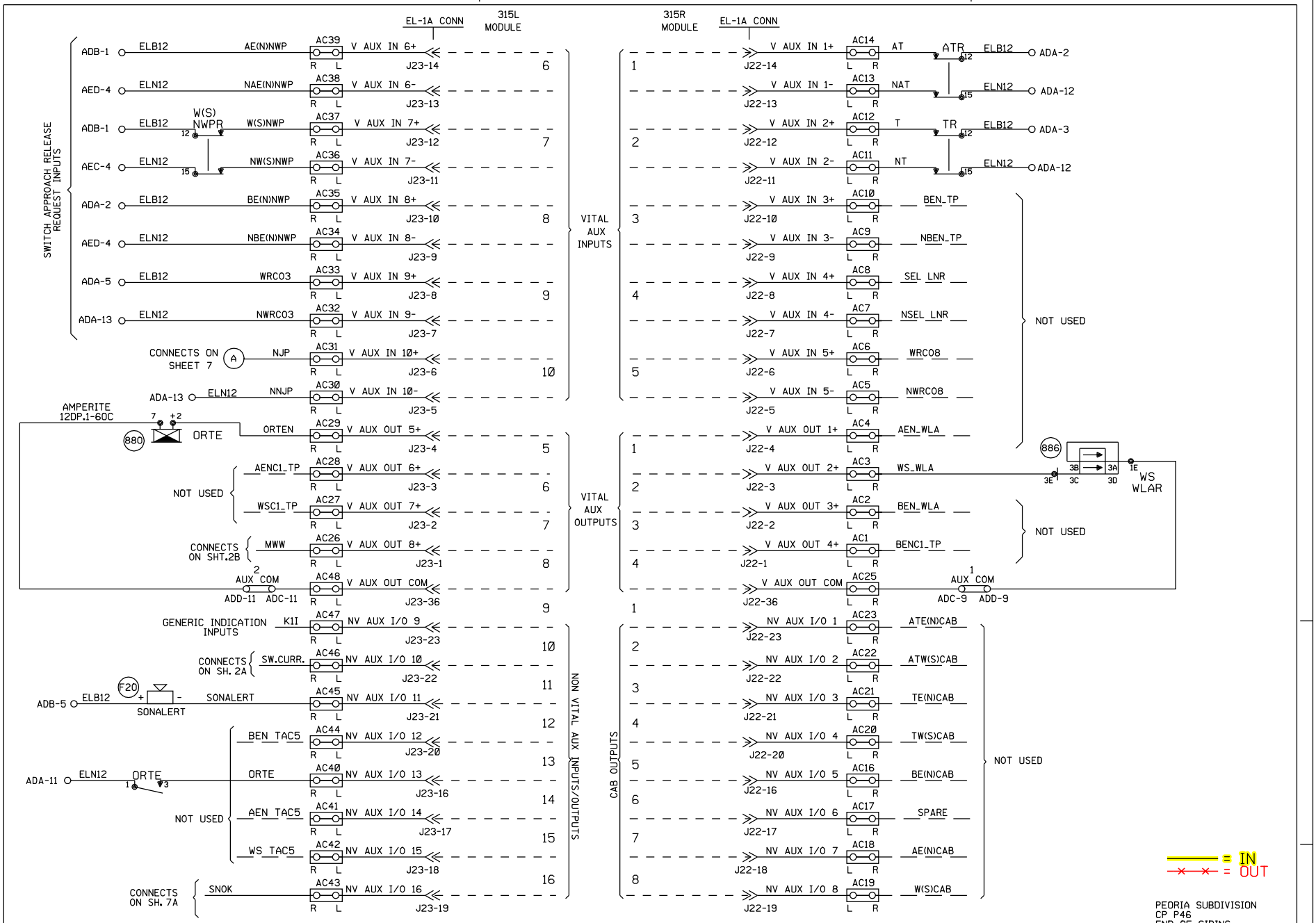

PEORIA SUBDIVISION
CP P46
END OF SIDING
SIGNALS E&W (N&S)
M.P. 46.57
8'X10' HOUSE

NEW SHEET

Designed: 11/03/11
INSTALL FLASHERS, GATES AND CWT AT 100N, M.P. 45.53.
Rec#: WO#: 11990
IS: /JTB /NST/JTB

1 7/20/07
INSTALL ELECTROCODE FROM M.P. 43.00 TO M.P. 61.00 PHASE 1
A.F.E. 83395 DLD/RCB / /SSS/RCB

MODIFICATION LEVEL	
Q. A. LAST LEVEL CHECKED	DE
LAST LEVEL MOD THIS TYPICAL	DO
LAST LEVEL BY DESIGNER	DP
CHANGED FROM TYPICAL?	Y

REV 02/01/06 ELORWEOS.4

UNION PACIFIC
QUALITY PRODUCTIVITY SAFETY
SIGNAL DESIGN

DES:	SSS
DIG:	SSS
CHK:	DLD
A.F.E.	83395
ID:	STL4657.4S

UNION PACIFIC RAILROAD

NELSON, ILLINOIS
TO I&M JCT., ILLINOIS
C.T.C. CIRCUITS

Office of AVP Engineering - Design Omaha, Nebraska

DATE 7/20/07
SHEET 4
DWG 46.57
STL

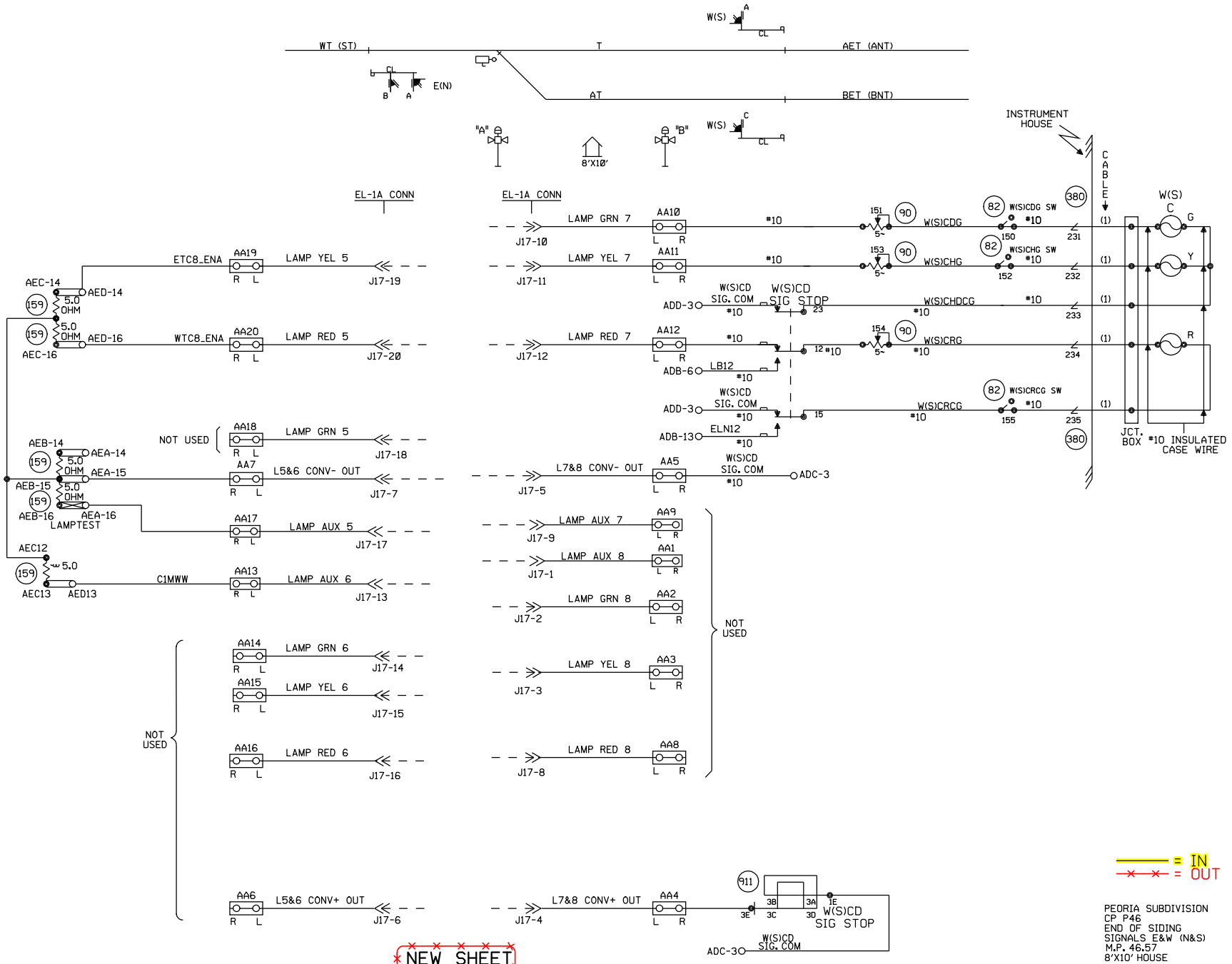

NEW SHEET

PEORIA SUBDIVISION
CP P46
END OF SIDING
SIGNALS E&W (N&S)
M.P. 46.57
8'X10' HOUSE

Designed: 11/03/11
INSTALL FLASHERS, GATES AND CWT AT 100N, M.P. 45.53.
Rec#: WO#: 11990
IS: /JTB /NST/JTB

1 7/20/07
INSTALL ELECTROCODE FROM M.P. 43.00 TO M.P. 61.00 PHASE 1
A.F.E. 83395 DLD/RCB / /SSS/RCB

MODIFICATION LEVEL	
Q. A. LAST LEVEL CHECKED	DE
LAST LEVEL MOD THIS TYPICAL	DO
LAST LEVEL BY DESIGNER	DP
CHANGED FROM TYPICAL?	Y

REV 02/01/06 ELORWEOS.5

UNION PACIFIC
QUALITY PRODUCTIVITY SAFETY
SIGNAL DESIGN

DES:	SSS
DIG:	SSS
CHK:	DLD
A.F.E.	83395
ID= STL4657.5S	

UNION PACIFIC RAILROAD

NELSON, ILLINOIS
TO I&M JCT., ILLINOIS
C.T.C. CIRCUITS

Office of AVP Engineering - Design Omaha, Nebraska

DATE 7/20/07
SHEET 5
DWG 46.57
STL

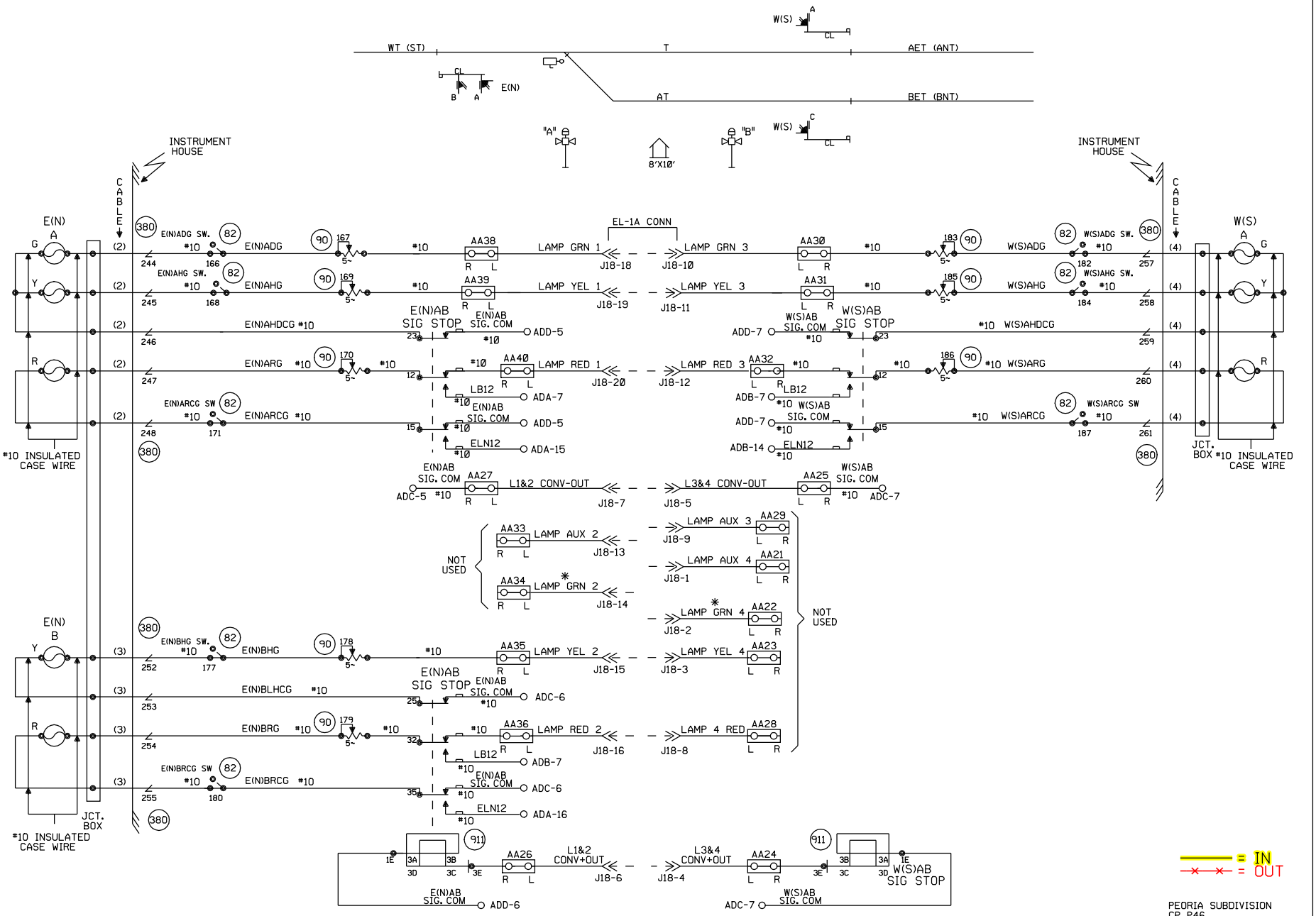

PEORIA SUBDIVISION
CP P46
END OF SIDING
SIGNALS E&W (N&S)
M.P. 46.57
8'X10' HOUSE

NEW SHEET

Designed: 11/03/11 INSTALL FLASHERS, GATES AND CWT AT 100N, M.P. 45.53. Rec#: IS: WO#: 11990 /JTB /NST/JTB	1 7/20/07 INSTALL ELECTROCODE FROM M.P. 43.00 TO M.P. 61.00 PHASE 1 A.F.E. 83395 DLD/RCB / /SSS/RCB	MODIFICATION LEVEL		UNION PACIFIC QUALITY PRODUCTIVITY SAFETY SIGNAL DESIGN	DES: SSS DIG: SSS CHK: DLD A.F.E. 83395 ID= STL4657.6S	UNION PACIFIC RAILROAD NELSON, ILLINOIS TO I&M JCT., ILLINOIS C.T.C. CIRCUITS Office of AVP Engineering - Design Omaha, Nebraska	DATE 7/20/07 SHEET 6 DWG 46.57 STL
		Q.A. LAST LEVEL CHECKED	DE				
		LAST LEVEL MOD THIS TYPICAL	DO				
		LAST LEVEL BY DESIGNER	DP				
		CHANGED FROM TYPICAL? REV 02/01/06 ELORWEOS.6	Y				

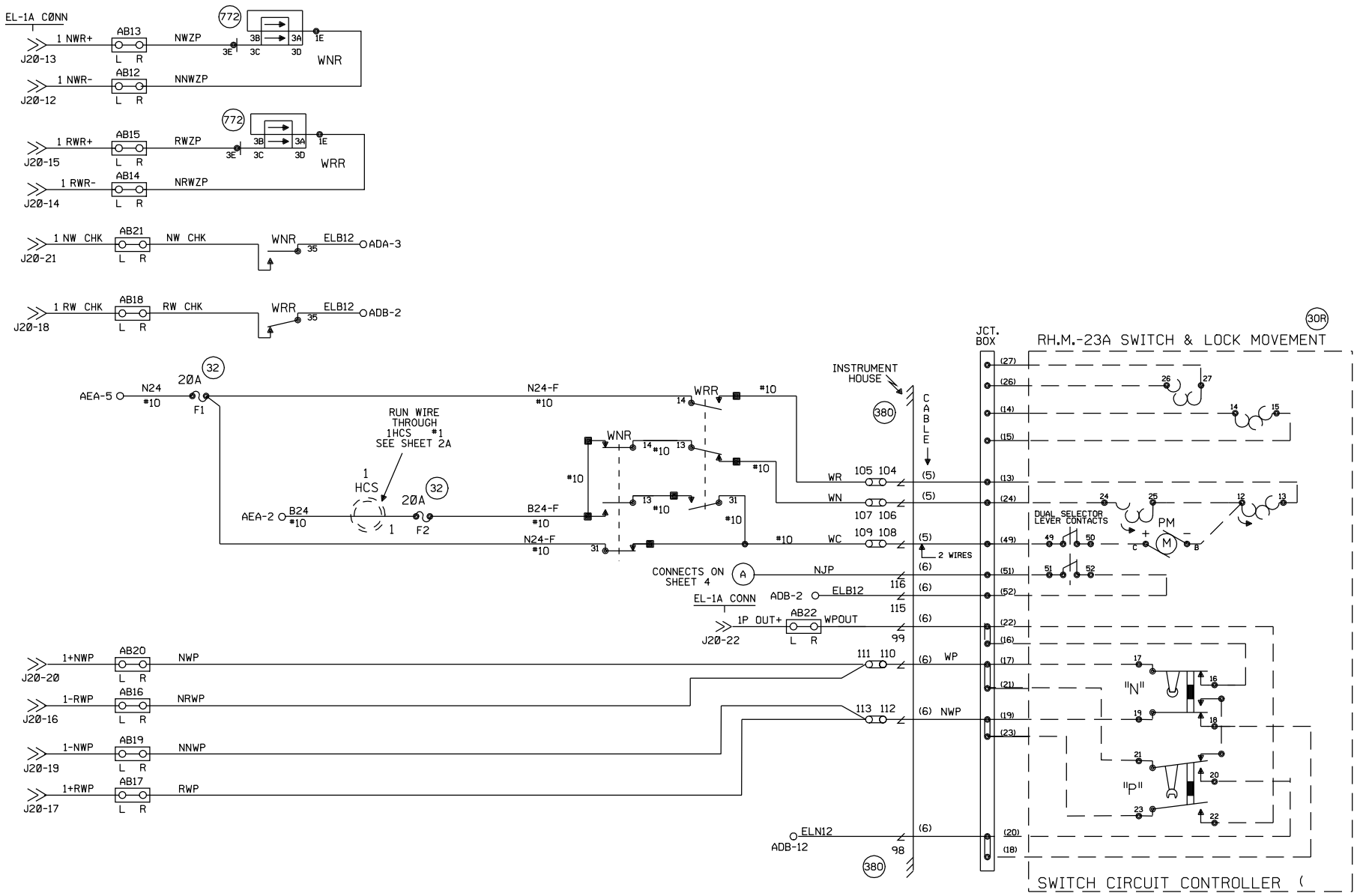

ALL WIRING #16 UNLESS OTHERWISE NOTED

PEORIA SUBDIVISION
CP P46
END OF SIDING
SIGNALS E&W (N&S)
M.P. 46.57
8'X10' HOUSE

NEW SHEET

Designed: 11/03/11
INSTALL FLASHERS, GATES AND CWT AT 100N, M.P. 45.53.
Rec#: WO#: 11990
IS: /JTB
/NST/JTB

1 7/20/07
INSTALL ELECTROCODE FROM M.P. 43.00 TO M.P. 61.00 PHASE 1
A.F.E. 83395 DLD/RCB
/ /SSS/RCB

MODIFICATION LEVEL	
Q.A. LAST LEVEL CHECKED	DE
LAST LEVEL MOD THIS TYPICAL	DO
LAST LEVEL BY DESIGNER	DP
CHANGED FROM TYPICAL?	Y

REV 02/01/06 ELORWEOS.7

UNION PACIFIC
QUALITY PRODUCTIVITY SAFETY
SIGNAL DESIGN

DES:	SSS
DIG:	SSS
CHK:	DLD
A.F.E.	83395
ID:	STL4657.7S

UNION PACIFIC RAILROAD

NELSON, ILLINOIS
TO I&M JCT., ILLINOIS
C.T.C. CIRCUITS

Office of AVP Engineering - Design Omaha, Nebraska

DATE 7/20/07
SHEET 7
DWG 46.57
STL

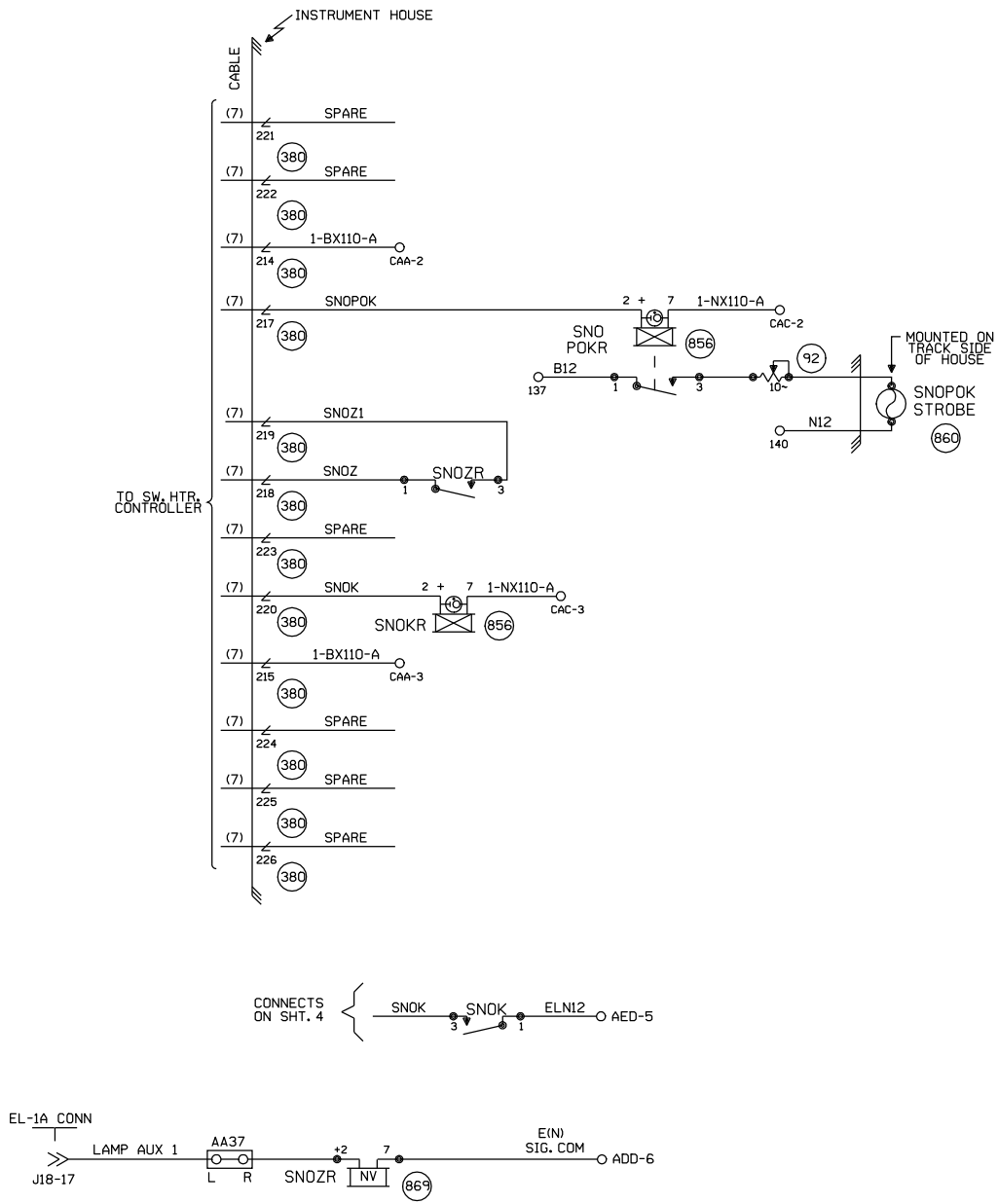

= IN
= OUT

PEORIA SUBDIVISION
CP P46
END OF SIDING
SIGNALS E&W (N&S)
M.P. 46.57
8'X10' HOUSE

NEW SHEET

Designed: 11/03/11
INSTALL FLASHERS, GATES AND CWT AT 100N, M.P. 45.53.
Rec#: WO#: 11990
IS: /JTB /NST/JTB

1 7/20/07
INSTALL ELECTROCODE FROM M.P. 43.00 TO M.P. 61.00 PHASE 1
A.F.E. 83395 DLD/RCB / /SSS/RCB

MODIFICATION LEVEL	
Q. A. LAST LEVEL CHECKED	DE
LAST LEVEL MOD THIS TYPICAL	DO
LAST LEVEL BY DESIGNER	DP
CHANGED FROM TYPICAL?	Y

REV 02/01/06 ELORWEOS.7A

UNION PACIFIC
QUALITY PRODUCTIVITY SAFETY
SIGNAL DESIGN

DES:	SSS
DIG:	SSS
CHK:	DLD
A.F.E.	83395
ID= STL4657.7AS	

UNION PACIFIC RAILROAD
NELSON, ILLINOIS
TO I&M JCT., ILLINOIS
C.T.C. CIRCUITS
Office of AVP Engineering - Design Omaha, Nebraska

DATE 7/20/07
SHEET 7A
DWG 46.57
STL

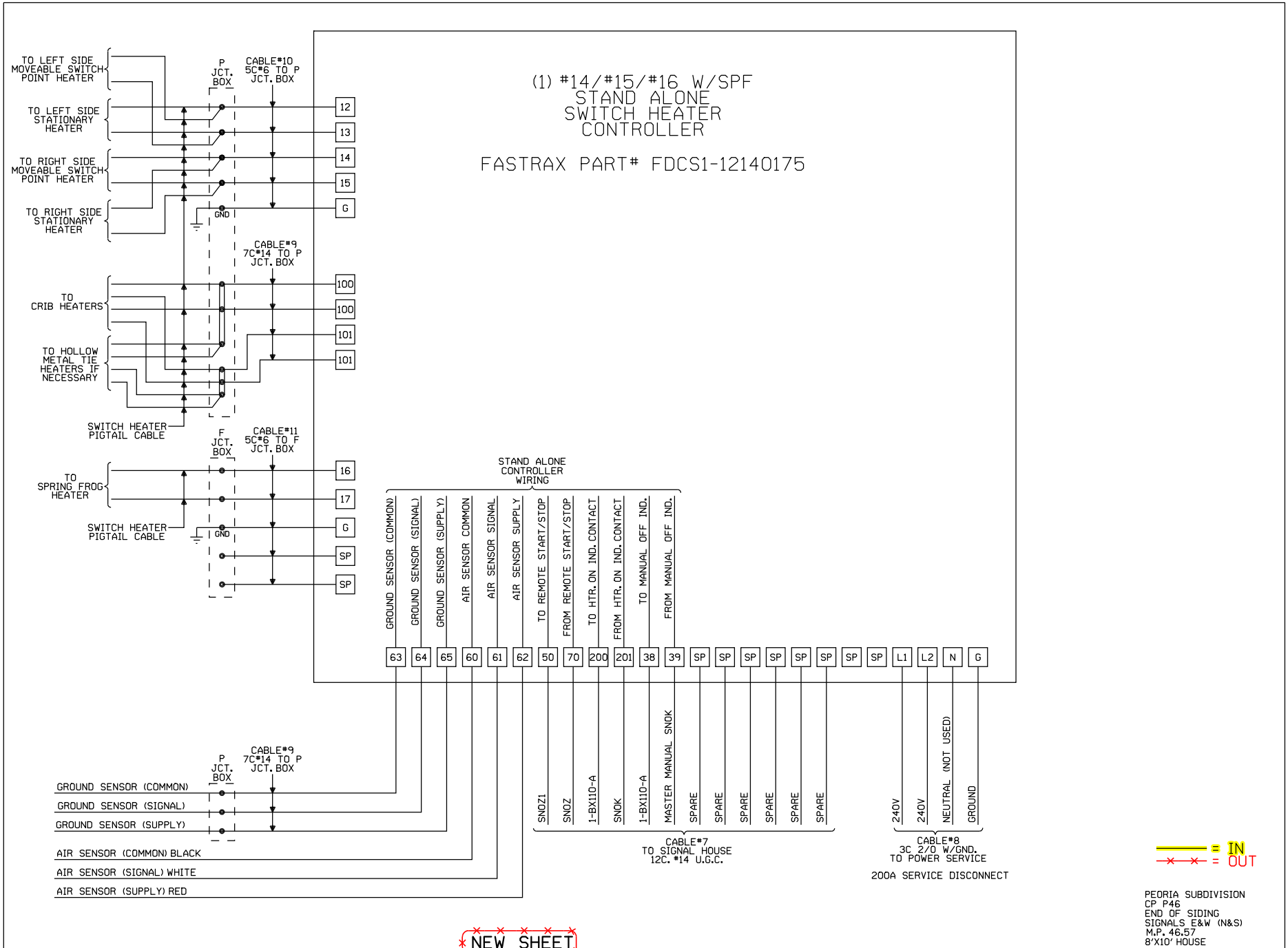

(1) #14/#15/#16 W/SPF
STAND ALONE
SWITCH HEATER
CONTROLLER
FASTRAX PART# FDCS1-12140175
TO LEFT SIDE MOVEABLE SWITCH POINT HEATER
TO LEFT SIDE STATIONARY HEATER
TO RIGHT SIDE MOVEABLE SWITCH POINT HEATER
TO RIGHT SIDE STATIONARY HEATER
P JCT. BOX
CABLE#10 5C#6 TO P JCT. BOX
GND
CABLE#9 7C#14 TO P JCT. BOX
TO CRIB HEATERS
TO HOLLOW METAL TIE HEATERS IF NECESSARY
SWITCH HEATER PIGTAIL CABLE
F JCT. BOX
CABLE#11 5C#6 TO F JCT. BOX
TO SPRING FROG HEATER
SWITCH HEATER PIGTAIL CABLE
12
13
14
15
G
100
100
101
101
16
17
G
SP
SP
STAND ALONE CONTROLLER WIRING
GROUND SENSOR (COMMON)
GROUND SENSOR (SIGNAL)
GROUND SENSOR (SUPPLY)
AIR SENSOR COMMON
AIR SENSOR SIGNAL
AIR SENSOR SUPPLY
TO REMOTE START/STOP
FROM REMOTE START/STOP
TO HTR. ON IND. CONTACT
FROM HTR. ON IND. CONTACT
TO MANUAL OFF IND.
FROM MANUAL OFF IND.
63 64 65 60 61 62 50 70 200 201 38 39 SP SP SP SP SP SP SP SP L1 L2 N G
GROUND SENSOR (COMMON)
GROUND SENSOR (SIGNAL)
GROUND SENSOR (SUPPLY)
AIR SENSOR (COMMON) BLACK
AIR SENSOR (SIGNAL) WHITE
AIR SENSOR (SUPPLY) RED
SNOZ1
SNOZ
1-BX110-A
SNOK
1-BX110-A
MASTER MANUAL SNOK
SPARE
SPARE
SPARE
SPARE
SPARE
SPARE
CABLE#7 TO SIGNAL HOUSE 12C. #14 U.G.C.
240V
240V
NEUTRAL (NOT USED)
GROUND
CABLE#8 3C 2/0 W/GND. TO POWER SERVICE
200A SERVICE DISCONNECT
= IN
= OUT
PEORIA SUBDIVISION
CP P46
END OF SIDING
SIGNALS E&W (N&S)
M.P. 46.57
8'X10' HOUSE
NEW SHEET
Designed: 11/03/11
INSTALL FLASHERS, GATES AND CWT AT 100N, M.P. 45.53.
Rec#: WO#: 11990
IS: /JTB /NST/JTB
1 7/20/07
INSTALL ELECTROCODE FROM M.P. 43.00 TO M.P. 61.00 PHASE 1
A.F.E. 83395 DLD/RCB /SSS/RCB
MODIFICATION LEVEL
Q. A. LAST LEVEL CHECKED DE
LAST LEVEL MOD THIS TYPICAL DO
LAST LEVEL BY DESIGNER DP
CHANGED FROM TYPICAL? Y
REV 02/01/06 ELORWEOS.7C
UNION PACIFIC
QUALITY PRODUCTIVITY SAFETY
SIGNAL DESIGN
DES: SSS
DIG: SSS
CHK: DLD
A.F.E. 83395
ID= STL4657.7BS
UNION PACIFIC RAILROAD
NELSON, ILLINOIS
TO I&M JCT., ILLINOIS
C.T.C. CIRCUITS
Office of AVP Engineering - Design Omaha, Nebraska
DATE 7/20/07
SHEET 7B
DWG 46.57
STL

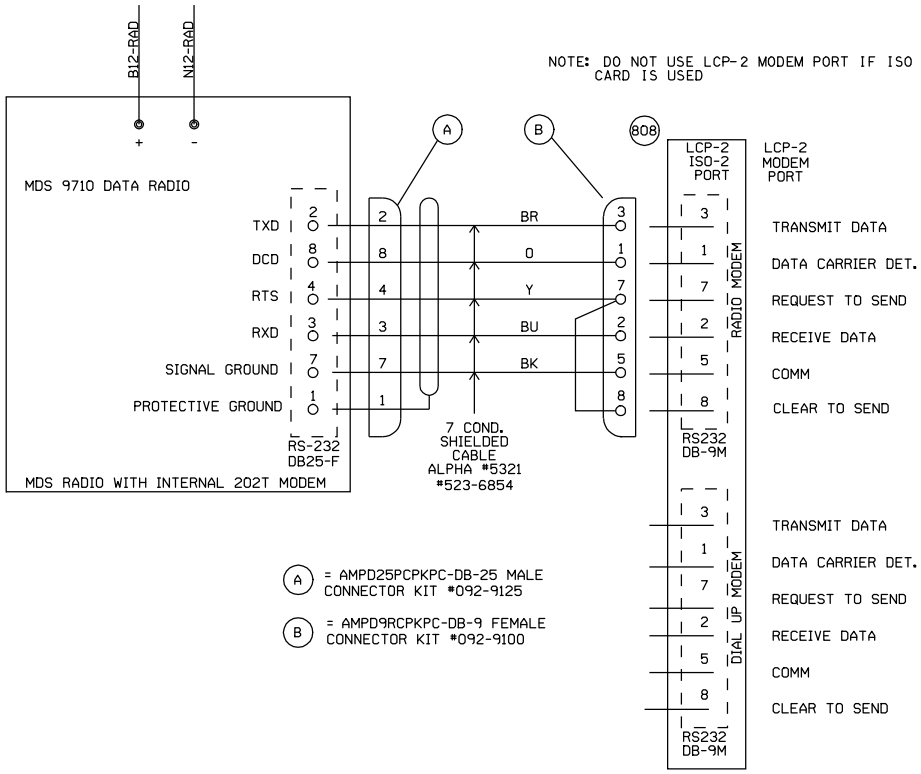

NOTE: DO NOT USE LCP-2 MODEM PORT IF ISO CARD IS USED

A = AMPD25PCPKPC-DB-25 MALE CONNECTOR KIT #092-9125

B = AMPD9RCPKPC-DB-9 FEMALE CONNECTOR KIT #092-9100

	BYTE NOS.		BIT ASSIGNMENT															
			EVEN BYTE								ODD BYTE							
			0	1	2	3	4	5	6	7	8	9	10	11	12	13	14	15
CTRL	0	1	1 NWZ	1 RWZ	AE(N) BLZ	AW(S) BLZ	BE(N) BLZ		E(N) GZ	W(S) GZ	CO GZ			DISP RELZ	DISP REQZ	SNOZ	MCZ	TEST LOOP
IND	0	1	1 NWK	1 RWK	AE(N) BLZK	AW(S) BLZK	BE(N) BLZK		E(N) GK	W(S) GK	1 TK	AE(N) TK	AW(S) TK	BE(N) TK		AE(N) AK	AW(S) AK	BE(N) AK
IND	2	3					DISP RELK	FRGN REQK	E SFK	W SFK	DISP REQK	K1 1K	LOPK	CARD STAT	(K21K) SW CURR	SNOK	POK	TEST

⊗ = #22 WIRE TWISTED PAIR

CP-
ADDRESS=

NEW SHEET

= IN
= OUT

PEORIA SUBDIVISION
CP P46
END OF SIDING
SIGNALS E&W (N&S)
M.P. 46.57
8'X10' HOUSE

Designed: 11/03/11
INSTALL FLASHERS, GATES AND CWT AT 100N, M.P. 45.53.
Rec#: WO#: 11990
IS: /JTB
/NST/JTB

1 7/20/07
INSTALL ELECTROCODE FROM M.P. 43.00 TO M.P. 61.00
PHASE 1
A.F.E. 83395 DLD/RCB
/ /SSS/RCB

MODIFICATION LEVEL	
Q. A. LAST LEVEL CHECKED	DE
LAST LEVEL MOD THIS TYPICAL	DO
LAST LEVEL BY DESIGNER	DP
CHANGED FROM TYPICAL?	Y

REV 02/01/06 ELORWEOS.8SP

UNION PACIFIC
QUALITY PRODUCTIVITY SAFETY
SIGNAL DESIGN

DES: SSS
DIG: SSS
CHK: DLD
A.F.E. 83395
ID= STL4657.8S

UNION PACIFIC RAILROAD
NELSON, ILLINOIS
TO I&M JCT., ILLINOIS
C.T.C. CIRCUITS
Office of AVP Engineering - Design Omaha, Nebraska

DATE 7/20/07
SHEET 8
DWG 46.57
STL

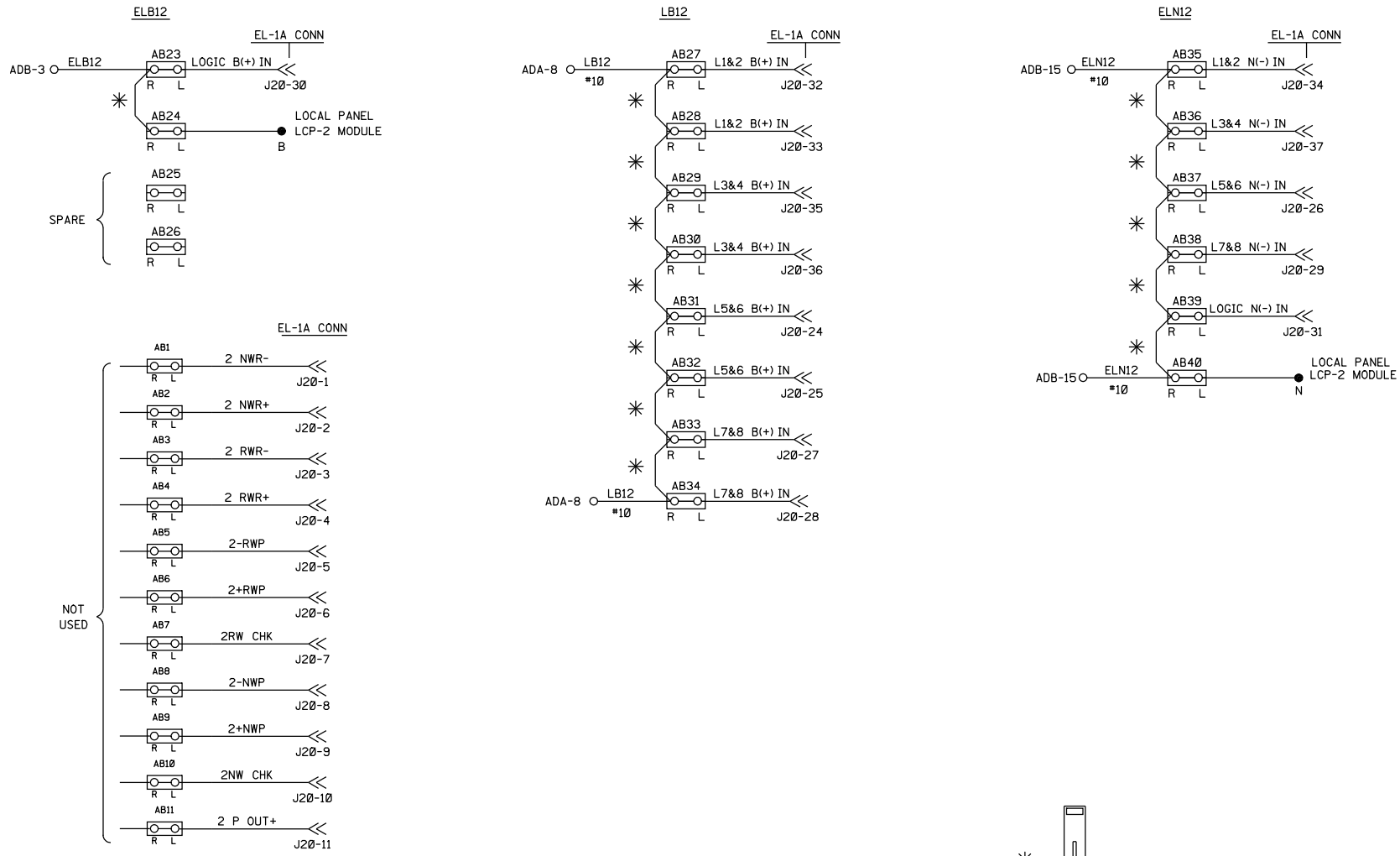

PEORIA SUBDIVISION
CP P46
END OF SIDING
SIGNALS E&W (N&S)
M.P. 46.57
8'X10' HOUSE

NEW SHEET

Designed: 11/03/11
INSTALL FLASHERS, GATES AND CWT AT 100N, M.P. 45.53.
Rec#: WO#: 11990
IS: /JTB /NST/JTB

1 7/20/07
INSTALL ELECTROCODE FROM M.P. 43.00 TO M.P. 61.00 PHASE 1
A.F.E. 83395 DLD/RCB / /SSS/RCB

MODIFICATION LEVEL	
Q. A. LAST LEVEL CHECKED	DE
LAST LEVEL MOD THIS TYPICAL	DO
LAST LEVEL BY DESIGNER	DP
CHANGED FROM TYPICAL?	N

REV 02/01/06 ELORWEOS.9

UNION PACIFIC
QUALITY PRODUCTIVITY SAFETY
SIGNAL DESIGN

DES:	SSS
DIG:	SSS
CHK:	DLD
A.F.E.	83395
ID= STL4657.9S	

UNION PACIFIC RAILROAD
NELSON, ILLINOIS
TO I&M JCT., ILLINOIS
C.T.C. CIRCUITS
Office of AVP Engineering - Design Omaha, Nebraska

DATE 7/20/07
SHEET 9
DWG 46.57
STL

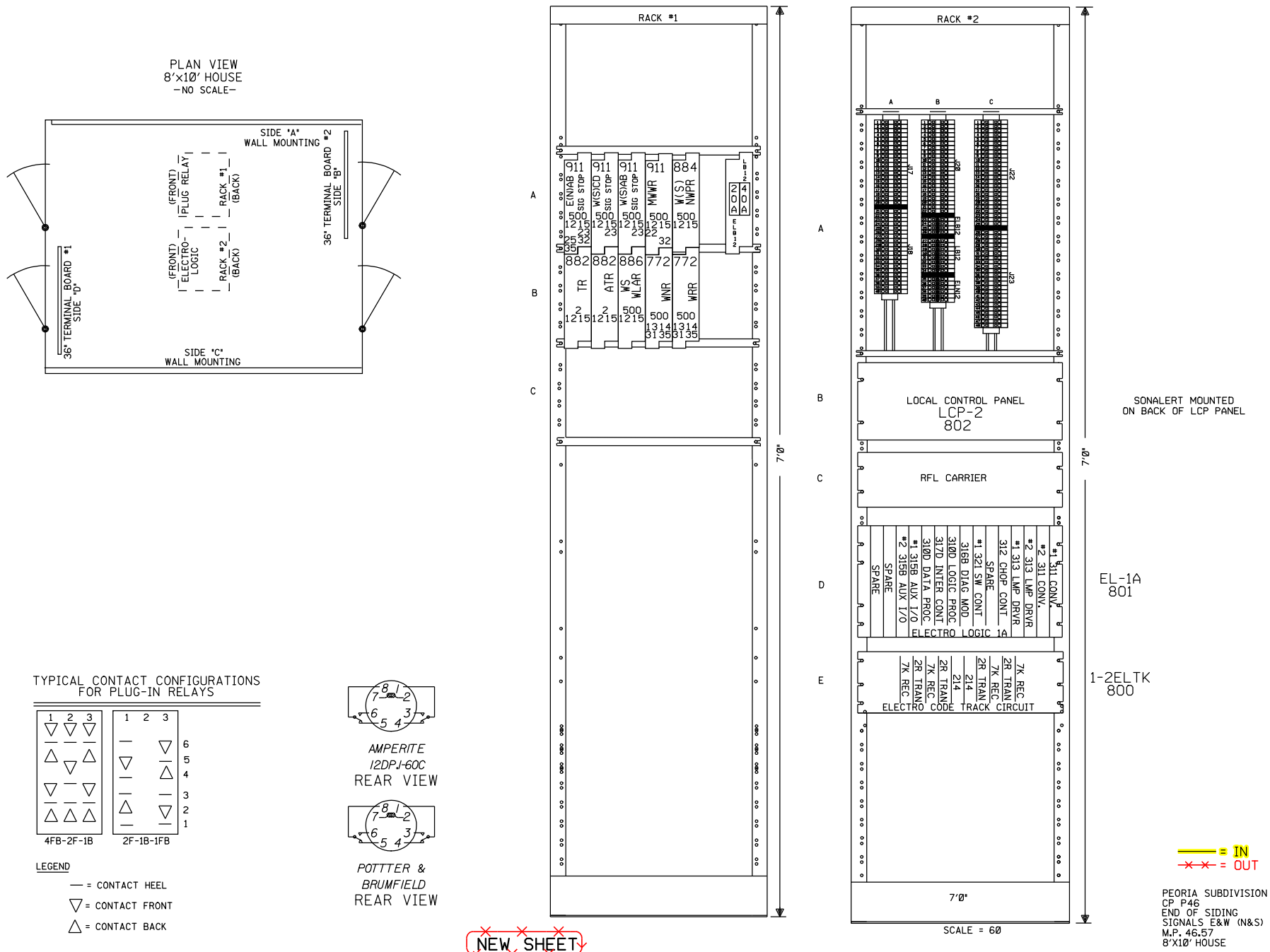

NEW SHEET

				Designed: 11/03/11 INSTALL FLASHERS, GATES AND CWT AT 100N, M.P. 45.53. Rec#: WO#: 11990 IS: /JTB /NST/JTB	1 7/20/07 INSTALL ELECTROCODE FROM M.P. 43.00 TO M.P. 61.00 PHASE 1 A.F.E. 83395 / DLD/RCB /SSS/RCB	MODIFICATION LEVEL Q. A. LAST LEVEL CHECKED DE LAST LEVEL MOD THIS TYPICAL DO LAST LEVEL BY DESIGNER DP CHANGED FROM TYPICAL? Y REV 02/01/06 ELORWEOS.10	UNION PACIFIC QUALITY PRODUCTIVITY SAFETY SIGNAL DESIGN	DES: SSS DIG: SSS CHK: DLD A.F.E. 83395 ID= STL4657.10S	UNION PACIFIC RAILROAD NELSON, ILLINOIS TO I&M JCT., ILLINOIS C.T.C. CIRCUITS Office of AVP Engineering - Design Omaha, Nebraska	DATE 7/20/07 SHEET 10 DWG 46.57 STL

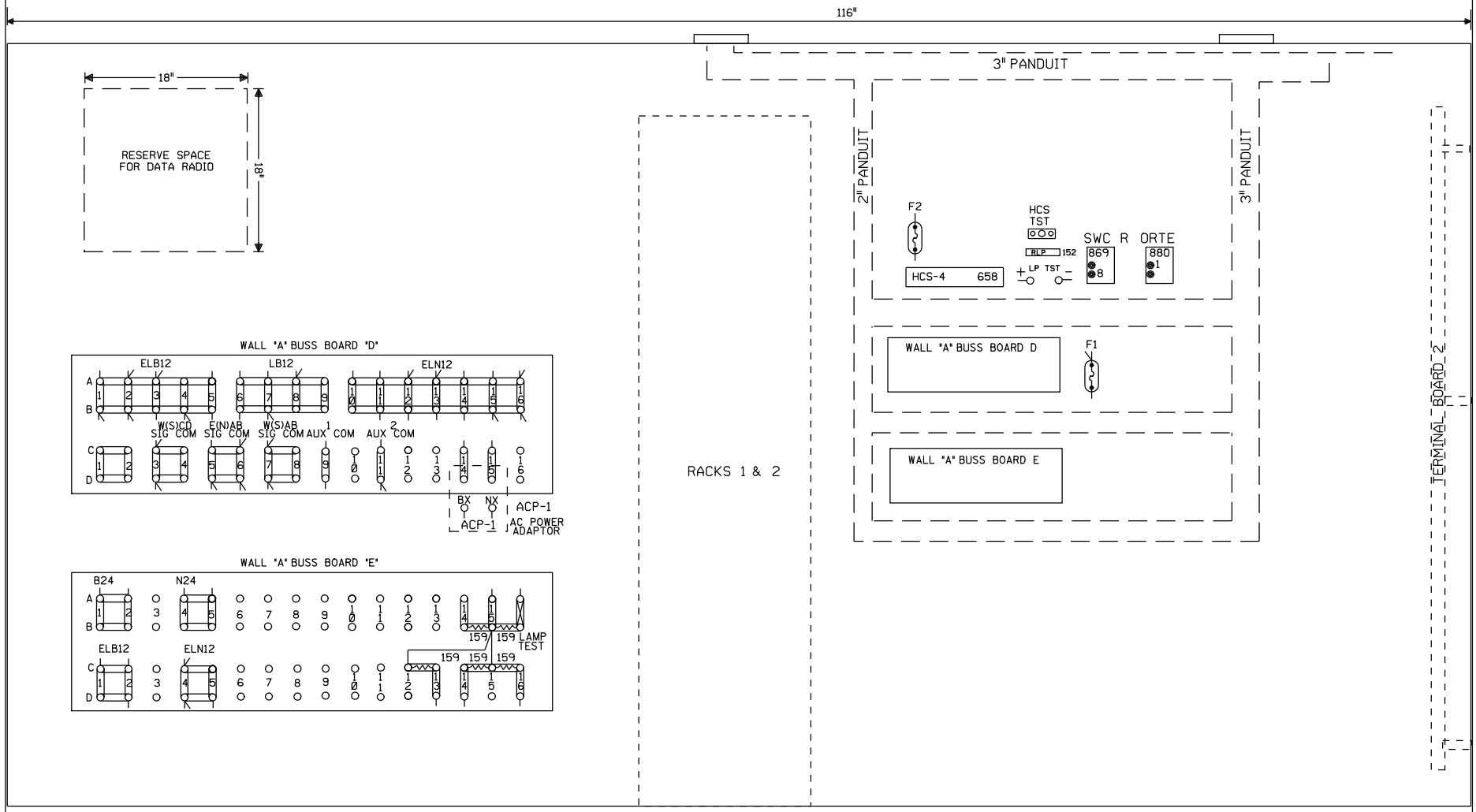

= IN
= OUT

PEORIA SUBDIVISION
CP P46
END OF SIDING
SIGNALS E&W (N&S)
M.P. 46.57
8'X10' HOUSE

NEW SHEET

Designed: 11/03/11
INSTALL FLASHERS, GATES AND CWT AT 100N, M.P. 45.53.
Rec#: WO#: 11990
IS: /JTB
/NST/JTB

1 7/20/07
INSTALL ELECTROCODE FROM M.P. 43.00 TO M.P. 61.00 PHASE 1
A.F.E. 83395
DLD/RCB
/SSS/RCB

MODIFICATION LEVEL	
Q.A. LAST LEVEL CHECKED	DE
LAST LEVEL MOD THIS TYPICAL	DO
LAST LEVEL BY DESIGNER	DP
CHANGED FROM TYPICAL?	Y

REV 02/01/06 ELORWEOS.11

UNION PACIFIC
QUALITY PRODUCTIVITY SAFETY
SIGNAL DESIGN

DES:	SSS
DIG:	SSS
CHK:	DLD
A.F.E.	83395
ID= STL4657.11S	

UNION PACIFIC RAILROAD
NELSON, ILLINOIS
TO I&M JCT., ILLINOIS
C.T.C. CIRCUITS
Office of AVP Engineering - Design Omaha, Nebraska

DATE 7/20/07
SHEET 11
DWG 46.57
STL

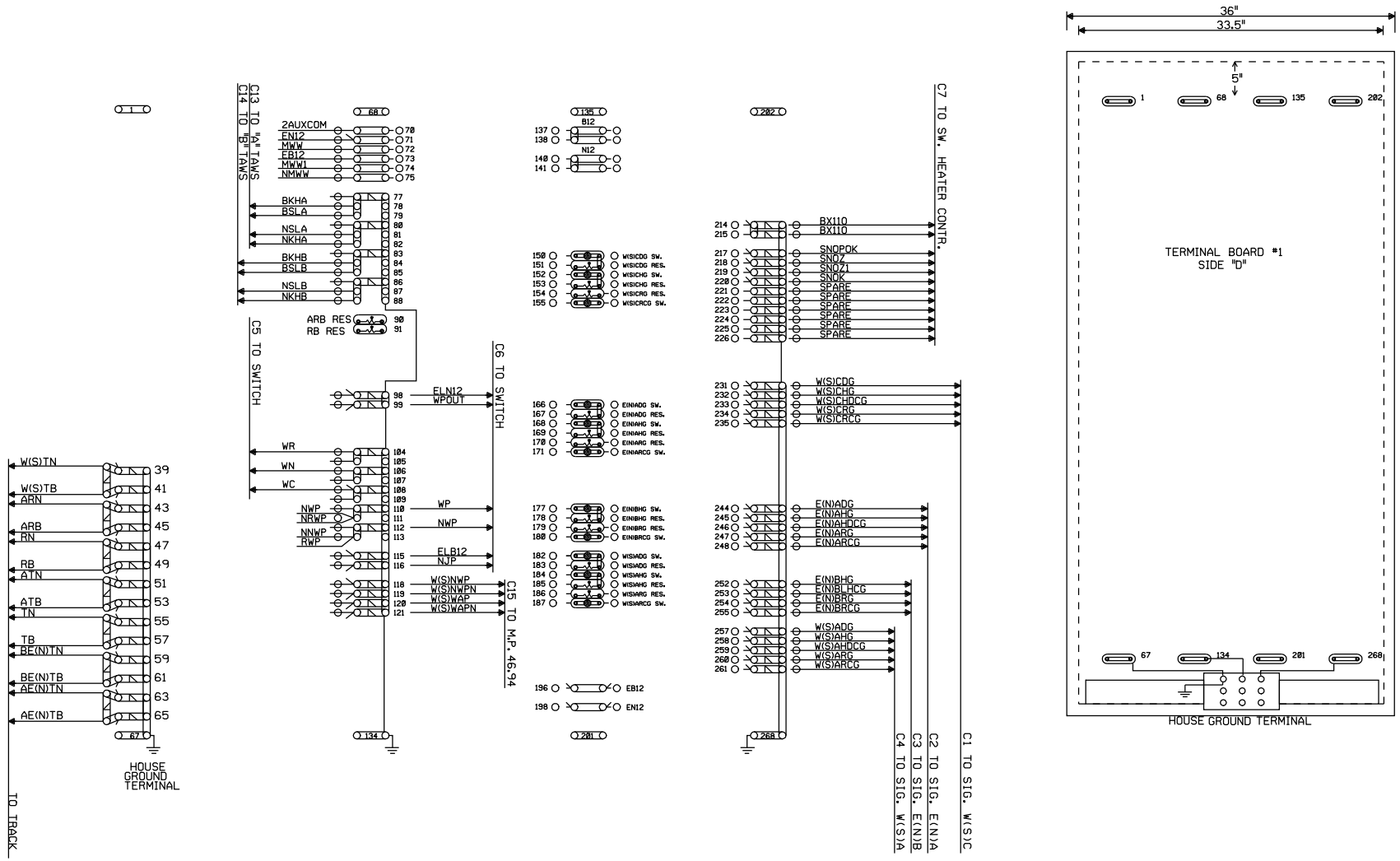

SEE SIGNAL STANDARD
DRAWING SD45A.2 FOR
HOUSE GROUNDING SCHEME

= IN
= OUT

PEORIA SUBDIVISION
CP P46
END OF SIDING
SIGNALS E&W (N&S)
M.P. 46.57
8'X10' HOUSE

NEW SHEET

Designed: 11/03/11
INSTALL FLASHERS, GATES AND CWT AT 100N, M.P. 45.53.
Req#: 15: /
WO#: 11990 /JTB /NST/JTB

1 7/20/07
INSTALL ELECTROCODE FROM M.P. 43.00 TO M.P. 61.00 PHASE 1
A.F.E. 83395
DLD/RCB / /SSS/RCB

MODIFICATION LEVEL	
Q. A. LAST LEVEL CHECKED	DE
LAST LEVEL MOD THIS TYPICAL	DO
LAST LEVEL BY DESIGNER	DP
CHANGED FROM TYPICAL?	Y
Rev 02/01/06 ELORWEOS.12	

UNION PACIFIC
QUALITY PRODUCTIVITY SAFETY
SIGNAL DESIGN

DES:	SSS
DIG:	SSS
CHK:	DLD
A.F.E.	83395
ID= STL4657.12S	

UNION PACIFIC RAILROAD

NELSON, ILLINOIS
TO I&M JCT., ILLINOIS
C.T.C. CIRCUITS

Office of AVP Engineering - Design Omaha, Nebraska

DATE 7/20/07
SHEET 12
DWG 46.57
STL

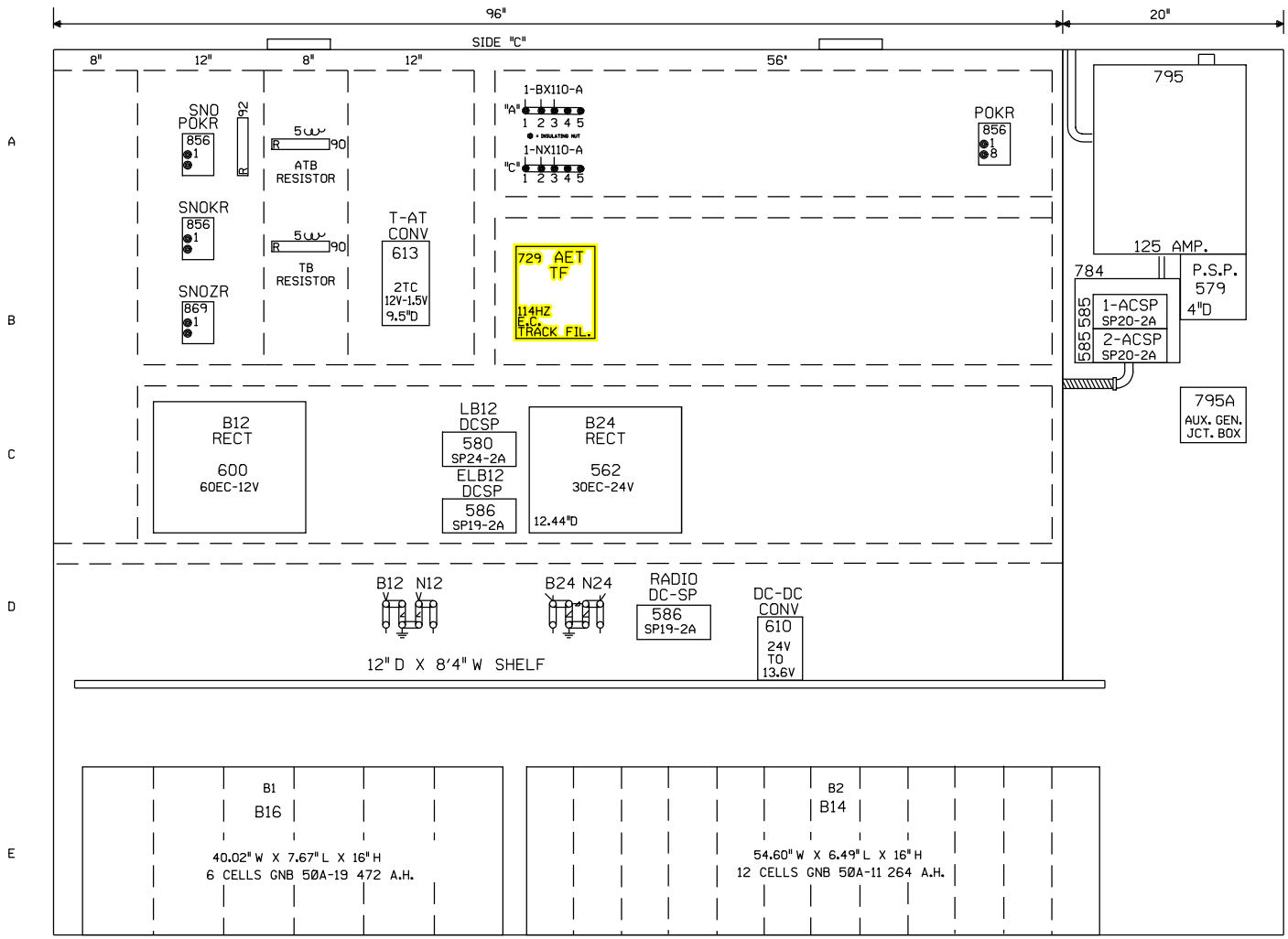

= IN
= OUT

PEORIA SUBDIVISION
CP P46
END OF SIDING
SIGNALS E&W (N&S)
M.P. 46.57
8'X10' HOUSE

NEW SHEET

Designed: 11/03/11
INSTALL FLASHERS, GATES AND CWT AT 100N, M.P. 45.53.
Rec#: IS: / WO#: 11990 /JTB /NST/JTB

1 7/20/07
INSTALL ELECTROCODE FROM M.P. 43.00 TO M.P. 61.00 PHASE 1
A.F.E. 83395
/ DLD/RCB /SSS/RCB

MODIFICATION LEVEL	
Q. A. LAST LEVEL CHECKED	DE
LAST LEVEL MOD THIS TYPICAL	DO
LAST LEVEL BY DESIGNER	DP
CHANGED FROM TYPICAL?	Y

REV 02/01/06 ELORWEOS.13

UNION PACIFIC
QUALITY PRODUCTIVITY SAFETY
SIGNAL DESIGN

DES:	SSS
DIG:	SSS
CHK:	DLD
A.F.E.	83395
ID= STL4657.13S	

UNION PACIFIC RAILROAD

NELSON, ILLINOIS
TO I&M JCT., ILLINOIS
C.T.C. CIRCUITS

Office of AVP Engineering - Design Omaha, Nebraska

DATE 7/20/07
SHEET 13
DWG 46.57
STL

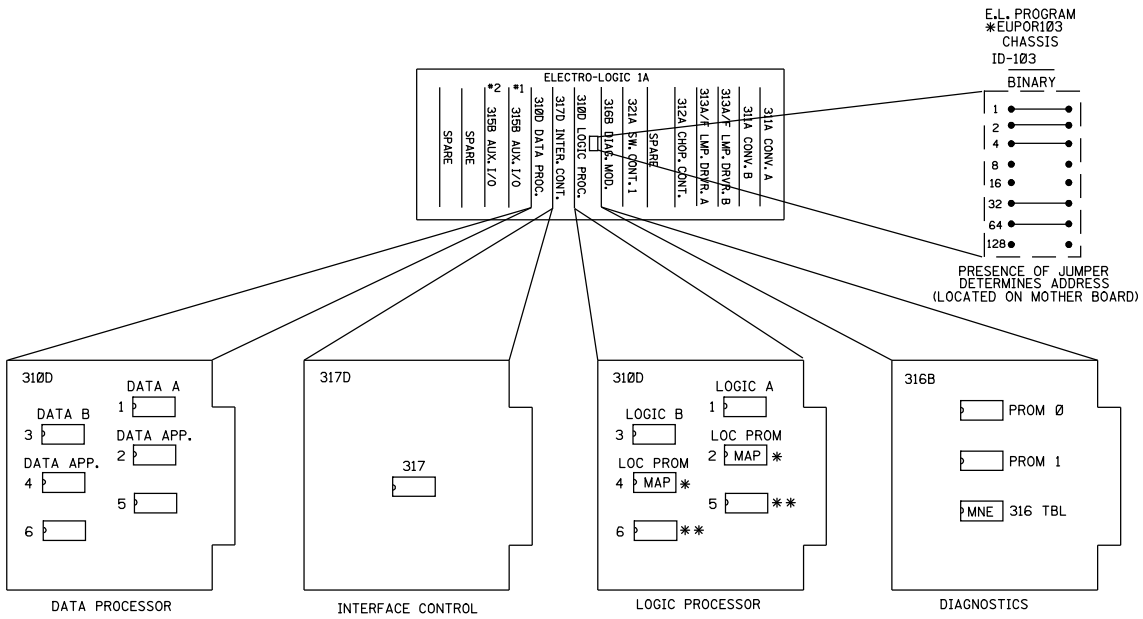

	CHKSUM	CRC	REV LEVEL	
DATA A	0F38	3266	03	
DATA B	D594	B6B1	03	
(2EA) DATA APP	1F32	5B3F	NC	
317	9FC5	C4C8	A	
LOGIC A	EB8B	64FC	02	
LOGIC B	F494	7E2B	02	
* (2EA) LOC PROM	56C0	EBB8	C	* EUPOR103.MAP
** (OPTIONAL) (2EA) DATA APP			C	* EL .MAP
316 PROM 0	5F0C	98DE	03	
316 PROM 1	6580	49F1	03	
* 316 TBL	AD64	DA7B	C	* EUPOR103.MNE

NOTE:

1. ALL ELECTRO-LOGIC MODULES ARE INTERCHANGEABLE. THE LOC. PROMS AND THE 316 TBL PROM ARE UNIQUE TO ONE LOCATION ONLY. DO NOT ATTEMPT TO USE AT ANY OTHER LOCATION.
2. ASR TIME= 8'00"

* = PROMS SUPPLIED BY DESIGN OFFICE

= IN
= OUT

PEORIA SUBDIVISION
CP P46
END OF SIDING
SIGNALS E&W (N&S)
M.P. 46.57
8'X10' HOUSE

NEW SHEET

Designed: 11/03/11
INSTALL FLASHERS, GATES AND CWT AT 100N, M.P. 45.53.
Req#: WO#: 11990
IS: /JTB /NST/JTB

1 7/20/07
INSTALL ELECTROCODE FROM M.P. 43.00 TO M.P. 61.00 PHASE 1
A.F.E. 83395 DLD/RCB / /SSS/RCB

MODIFICATION LEVEL	
Q. A. LAST LEVEL CHECKED	DE
LAST LEVEL MOD THIS TYPICAL	DO
LAST LEVEL BY DESIGNER	DP
CHANGED FROM TYPICAL?	N

REV 02/01/06 ELORWEOS.14

UNION PACIFIC
QUALITY PRODUCTIVITY SAFETY
SIGNAL DESIGN

DES: SSS
DIG: SSS
CHK: DLD
A.F.E. 83395
ID= STL4657.14S

UNION PACIFIC RAILROAD
NELSON, ILLINOIS
TO I&M JCT., ILLINOIS
C.T.C. CIRCUITS
Office of AVP Engineering - Design Omaha, Nebraska

DATE 7/20/07
SHEET 14
DWG 46.57
STL

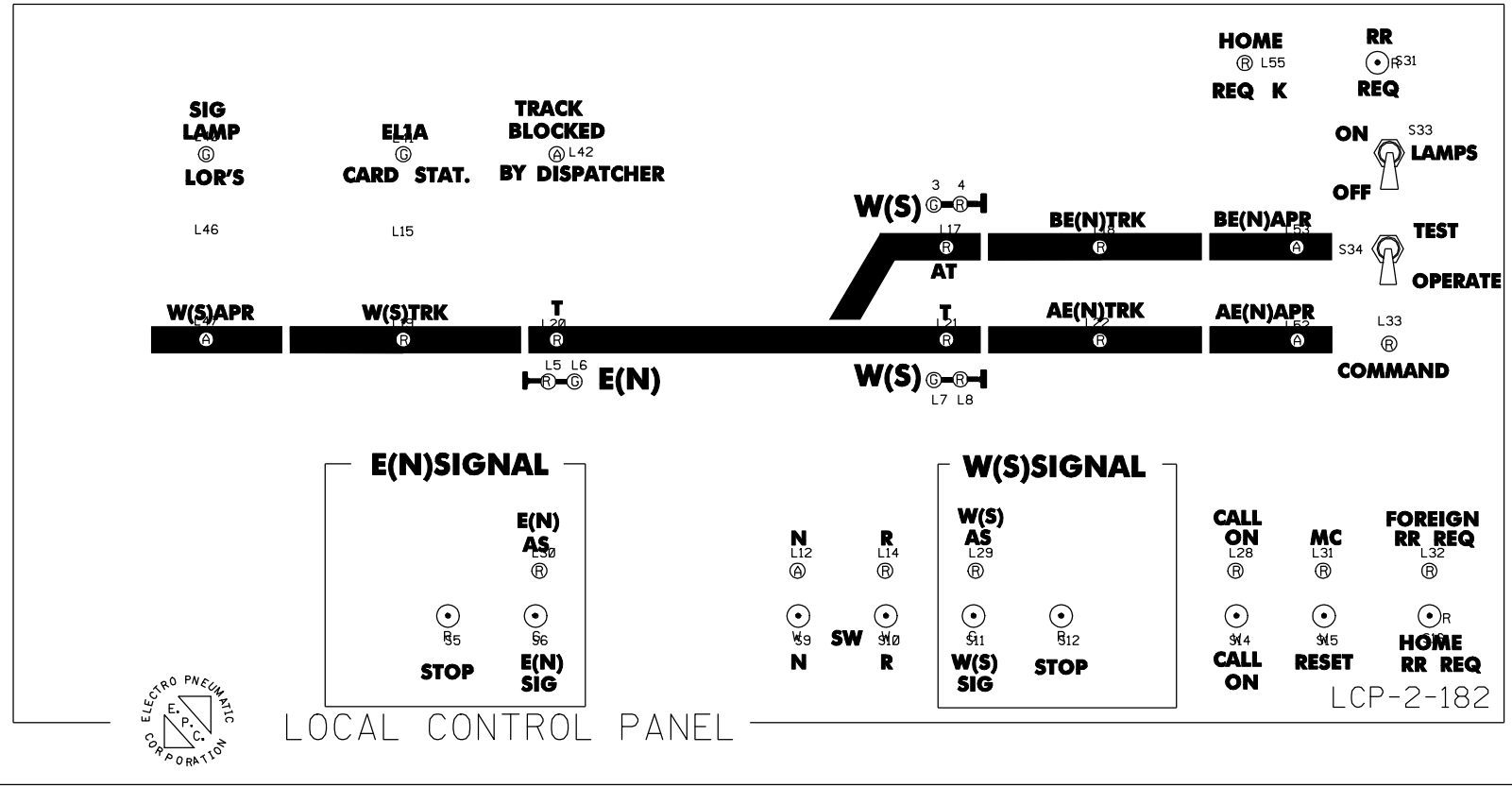

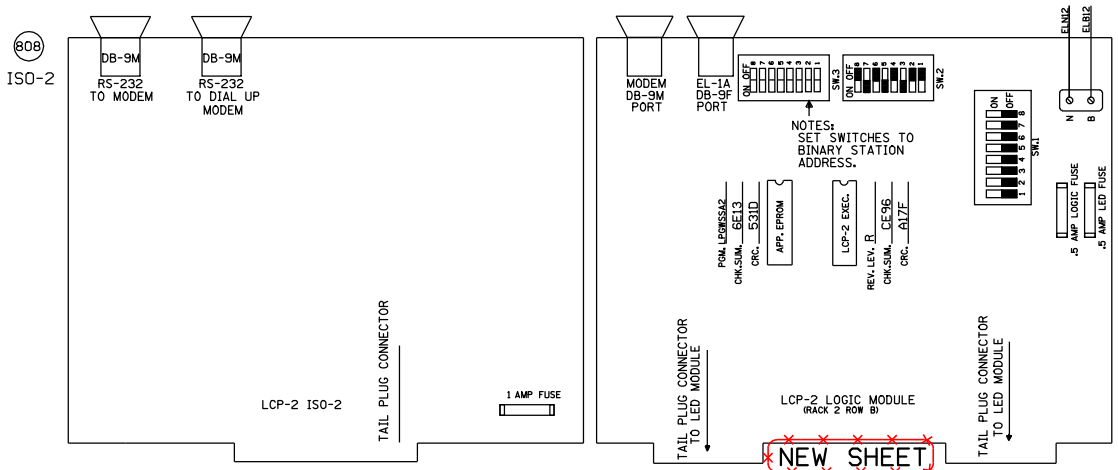

(RACK 2 ROW B)

SW. 2 SETTINGS

MODEM PORT BAUD RATE

	1	2	3	4
75 BAUD	0	0	0	X
150 BAUD	1	0	0	X
300 BAUD	0	1	0	X
600 BAUD	1	1	0	X
1200 BAUD	0	0	1	X
2400 BAUD	1	0	1	X
4800 BAUD	0	1	1	X
9600 BAUD	1	1	1	X
1 STOP BIT	X	X	X	0
2 STOP BIT	X	X	X	1

317 PORT BAUD RATE

	5	6	7	8
75 BAUD	0	0	0	X
150 BAUD	1	0	0	X
300 BAUD	0	1	0	X
600 BAUD	1	1	0	X
1200 BAUD	0	0	1	X
2400 BAUD	1	0	1	X
4800 BAUD	0	1	1	X
9600 BAUD	1	1	1	X
1 STOP BIT	X	X	X	0
2 STOP BIT	X	X	X	1

SW. 1 SETTINGS

NORMAL OPERATION OF ANY SYSTEM REQUIRES ALL POSITIONS ON SWITCH ONE TO BE OFF.

NOTES:

SIG LAMP LOR'S - ON IF NO LIGHT OUTS ON WAYSIDE SIGNALS.

EL1A CARD STAT - ON IF CARDS IN ELECTROLOGIC ARE OPERATIONAL

"AS" INDICATIOR LIGHTS

ON IF NO TIME RUNNING
OFF IF SIGNAL CLEAR
FLASHING IF IN TIME.

APR LIGHTS - CODE 5 INDICATOR LIGHTS

TRK LIGHTS - CODE 1 TRACK LIGHTS.

FLASHING TRACK LIGHTS - TRACK BLOCK BY DISPATCHER

PROMS SUPPLIED BY DESIGN OFFICE

= IN
= OUT

PEORIA SUBDIVISION
CP P46
END OF SIDING
SIGNALS E&W (N&S)
M.P. 46.57
8'X10' HOUSE

Designed: 11/03/11

INSTALL FLASHERS, GATES AND CWT AT 100N, M.P. 45.53.

Rec'd: IS: WO#: 11990 /JTB /NST/JTB

1 7/20/07
INSTALL ELECTROCODE FROM M.P. 43.00 TO M.P. 61.00
PHASE 1
A.F.E. 83395 DLD/RCB / /SSS/RCB

MODIFICATION LEVEL	
Q. A. LAST LEVEL CHECKED	DE
LAST LEVEL MOD THIS TYPICAL	DO
LAST LEVEL BY DESIGNER	DP
CHANGED FROM TYPICAL?	N

REV 02/01/86 ELORWEOS.15

UNION PACIFIC
QUALITY PRODUCTIVITY SAFETY
SIGNAL DESIGN

DES:	SSS
DIG:	SSS
CHK:	DLD
A.F.E.	83395
ID= STL4657.15S	

UNION PACIFIC RAILROAD
NELSON, ILLINOIS
TO I&M JCT., ILLINOIS
C.T.C. CIRCUITS
Office of AVP Engineering - Design Omaha, Nebraska

DATE 7/20/07
SHEET 15
DWG 46.57
STL