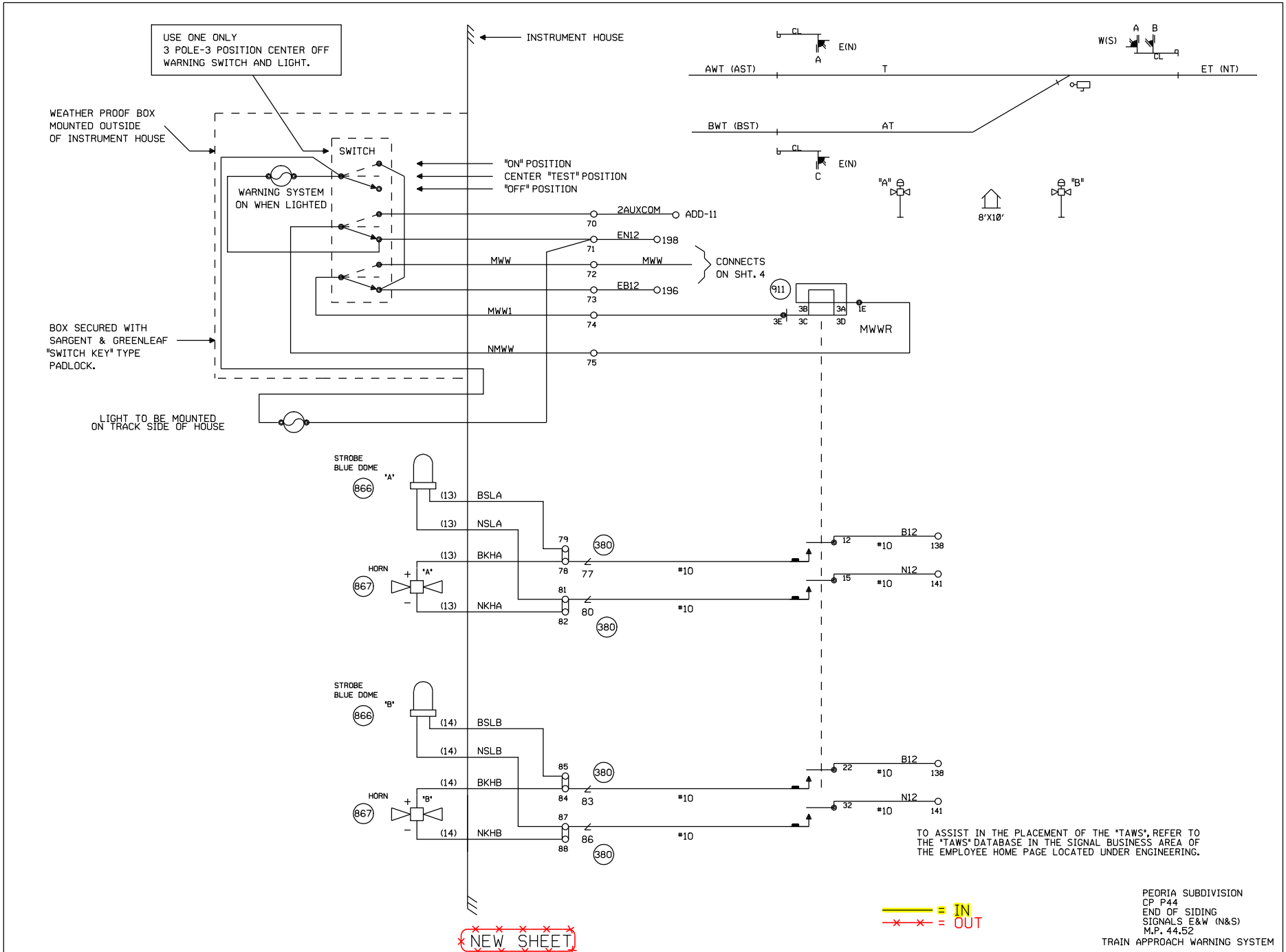

PEORIA SUBDIVISION
CP P44
END OF SIDING
SIGNALS E&W (N&S)
M.P. 44.52
TRAIN APPROACH WARNING SYSTEM

Designed: 11/03/11
INSTALL FLASHERS, GATES AND CWT AT 100N, M.P. 45.53.
Rec#: WO#: 11990
IS: /JTB /NST/JTB

1 7/20/07
INSTALL ELECTROCODE
FROM M.P. 43.00
TO M.P. 61.00
PHASE 1
A.F.E. 83395 DLD/RCB
/ /SSS/RCB

MODIFICATION LEVEL	
Q. A. LAST LEVEL CHECKED	DE
LAST LEVEL MOD THIS TYPICAL	DO
LAST LEVEL BY DESIGNER	DP
CHANGED FROM TYPICAL?	Y

REV 06/22/06 ELOREEOS. 2B

UNION PACIFIC
QUALITY PRODUCTIVITY SAFETY
SIGNAL DESIGN

DES:	SSS
DIG:	SSS
CHK:	DLD
A.F.E.	83395
ID= STL4452.2BS	

UNION PACIFIC RAILROAD
NELSON, ILLINOIS
TO I&M JCT., ILLINOIS
C.T.C. CIRCUITS
Office of AVP Engineering - Design Omaha, Nebraska

DATE 7/20/07
SHEET 2B
DWG 44.52
STL

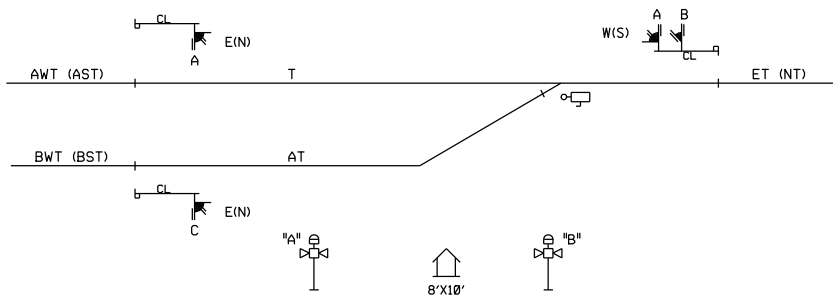

CABLE TABULATION

CABLE NO. 1	5C.NO. 6 U.G.B.T. HOUSE TO SIG. E(N)C
CABLE NO. 2	5C.NO. 6 U.G.B.T. HOUSE TO SIG. E(N)A
CABLE NO. 3	5C.NO. 6 U.G.B.T. HOUSE TO SIG. W(S)A
CABLE NO. 4	5C.NO. 6 U.G.B.T. HOUSE TO SIG. W(S)B
CABLE NO. 5	5C.NO. 6 U.G.B.T. HOUSE TO SW.
CABLE NO. 6	7C.NO.14 U.G.B.T. HOUSE TO SW.
CABLE NO. 7	12C.NO.14 U.G.B.T. HOUSE TO SW. HTR. CONTR.
CABLE NO. 8	3C 2/0 W/GND. CONTR. TO POWER SERVICE.
CABLE NO. 9	7C.NO.14 U.G.B.T. CONTR. TO P JCT. BOX.
CABLE NO.10	5C.NO. 6 U.G.B.T. CONTR. TO P JCT. BOX.
CABLE NO.11	5C.NO. 6 U.G.B.T. CONTR. TO F JCT. BOX.
CABLE NO.12	TO BE DETERMINED BY NATIONAL STANDARD ELECTRICAL CODE
CABLE NO.13	5C.NO. 6 U.G.B.T. HOUSE TO TAWS 'A'
CABLE NO.14	5C.NO. 6 U.G.B.T. HOUSE TO TAWS 'B'

= IN
= OUT

PEORIA SUBDIVISION
CP P44
END OF SIDING
SIGNALS E&W (N&S)
M.P. 44.52
8'X10' HOUSE

NEW SHEET

Designed: 11/03/11
INSTALL FLASHERS, GATES AND CWT AT 100N, M.P. 45.53.
Rec'd: WO's 11990
IS: /JTB
/ /NST/JTB

1 7/20/07
INSTALL ELECTROCODE
FROM M.P. 43.00
TO M.P. 61.00
PHASE 1
A.F.E. 83395 DLD/RCB
/ /SSS/RCB

MODIFICATION LEVEL	
D. A. LAST LEVEL CHECKED	DE
LAST LEVEL MOD THIS TYPICAL	DO
LAST LEVEL BY DESIGNER	DP
CHANGED FROM TYPICAL?	Y
REV 06/22/06 ELDREEDS.3	

UNION PACIFIC
QUALITY PRODUCTIVITY SAFETY
SIGNAL DESIGN

DES:	SSS
DIG:	SSS
CHK:	DLD
A.F.E.	83395
ID= STL4452.3S	

UNION PACIFIC RAILROAD

NELSON, ILLINOIS
TO I&M JCT., ILLINOIS
C.T.C. CIRCUITS

Office of AVP Engineering - Design Omaha, Nebraska

DATE 7/20/07
SHEET 3
DWG 44.52
STL

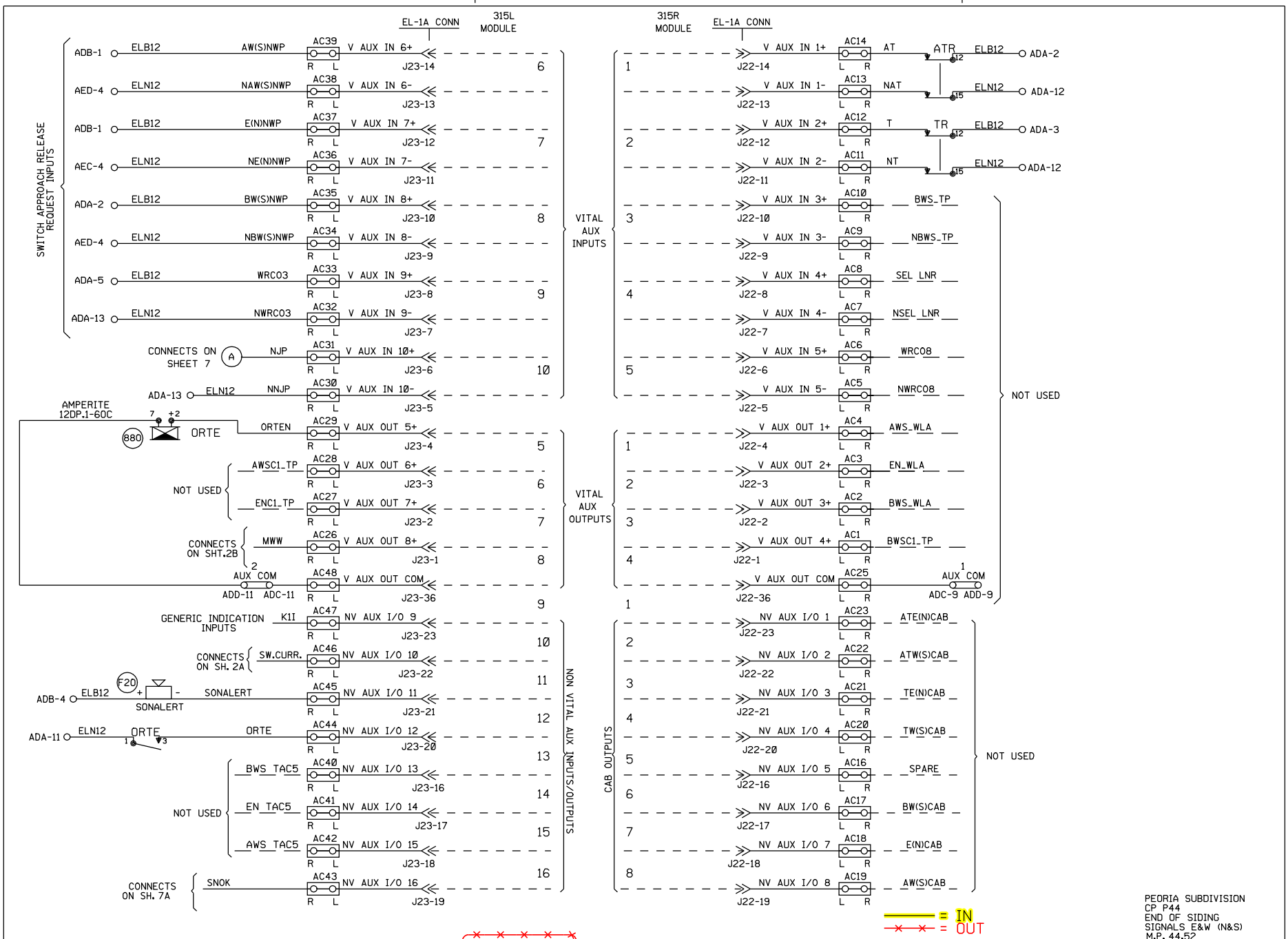

PEORIA SUBDIVISION
CP P44
END OF SIDING
SIGNALS E&W (N&S)
M.P. 44.52
8'X10' HOUSE

NEW SHEET

Designed: 11/03/11
INSTALL FLASHERS, GATES AND CWT AT 100N, M.P. 45.53.
Rec#: WO#: 11990
IS: /JTB /NST/JTB

1 7/20/07
INSTALL ELECTROCODE FROM M.P. 43.00 TO M.P. 61.00
PHASE 1
A.F.E. 83395 DLD/RCB / /SSS/RCB

MODIFICATION LEVEL	
Q. A. LAST LEVEL CHECKED	DE
LAST LEVEL MOD THIS TYPICAL	DO
LAST LEVEL BY DESIGNER	DP
CHANGED FROM TYPICAL?	Y

REV 06/22/06 ELOREEOS.4

UNION PACIFIC
QUALITY PRODUCTIVITY SAFETY
SIGNAL DESIGN

DES: SSS
DIG: SSS
CHK: DLD
A.F.E. 83395
ID: STL4452.4S

UNION PACIFIC RAILROAD

NELSON, ILLINOIS
TO I&M JCT., ILLINOIS
C.T.C. CIRCUITS

Office of AVP Engineering - Design Omaha, Nebraska

DATE 7/20/07
SHEET 4
DWG 44.52
STL

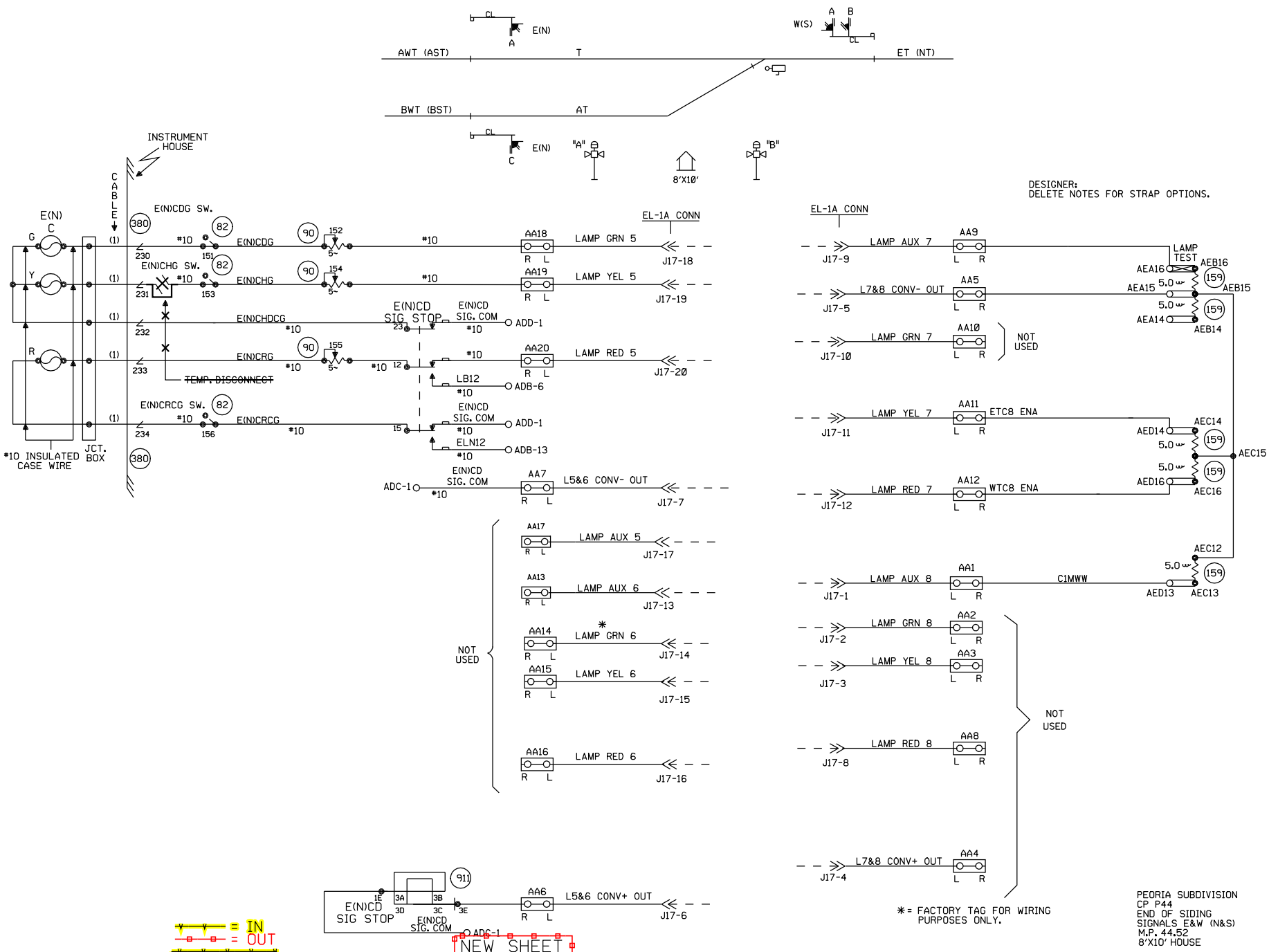

2	2/08/08	INSTALL ELECTROCODE FROM M.P. 20.00 TO M.P. 43.00 PHASE 2 A.F.E. 83394 DLD/RCB / /SSS/RCB
1	7/20/07	INSTALL ELECTROCODE FROM M.P. 43.00 TO M.P. 61.00 PHASE 1 A.F.E. 83395 DLD/RCB / /SSS/RCB

MODIFICATION LEVEL	
D. A. LAST LEVEL CHECKED	DE
LAST LEVEL MOD THIS TYPICAL	DO
LAST LEVEL BY DESIGNER	DP
CHANGED FROM TYPICAL?	Y
REV 06/22/06 ELOREEOS.5	

UNION PACIFIC
SIGNAL DESIGN

DES:	SSS
DIG:	SSS
CHK:	DLD
A.F.E.	83395
ID: STL4452.5S	

UNION PACIFIC RAILROAD

NELSON, ILLINOIS
TO I&M JCT., ILLINOIS
C.T.C. CIRCUITS

Office of AVP Engineering - Design Omaha, Nebraska

DATE 7/20/07
SHEET 5
DWG 44.52
STL

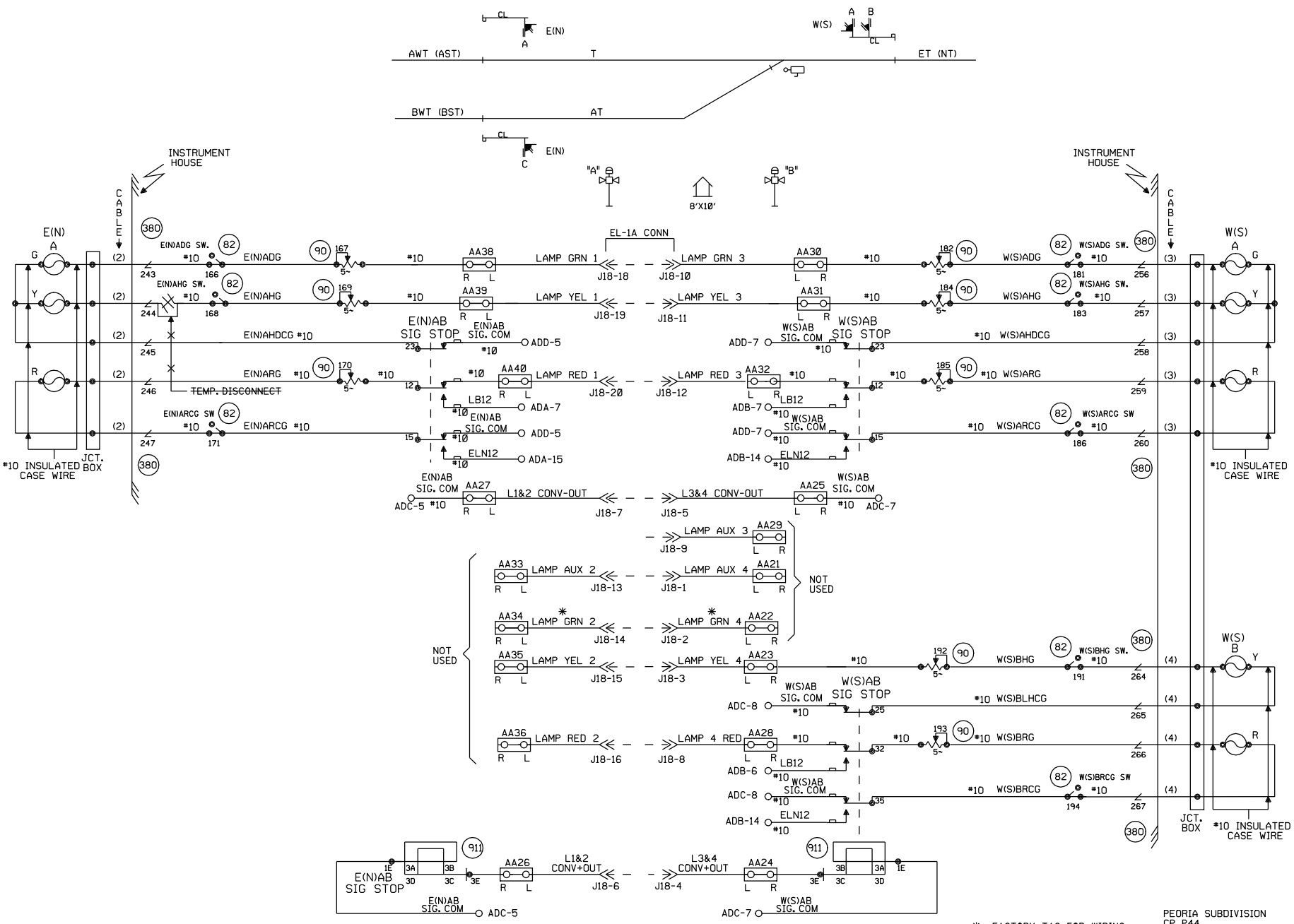

*= FACTORY TAG FOR WIRING PURPOSES ONLY.

PEORIA SUBDIVISION
CP P44
END OF SIDING
SIGNALS E&W (N&S)
M.P. 44.52
8'X10' HOUSE

= IN
= OUT
NEW SHEET

Designed: 11/03/11
INSTALL FLASHERS, GATES AND CWT AT 100N, M.P. 45.53.
Rec#: IS:
WO#: 11990 /JTB /NST/JTB

2	2/08/08	INSTALL ELECTROCODE FROM M.P. 20.00 TO M.P. 43.00 PHASE 2 A.F.E. 83394 DLD/RCB / /SSS/RCB
1	7/20/07	INSTALL ELECTROCODE FROM M.P. 43.00 TO M.P. 61.00 PHASE 1 A.F.E. 83395 DLD/RCB / /SSS/RCB

MODIFICATION LEVEL	
Q.A. LAST LEVEL CHECKED	DE
LAST LEVEL MOD THIS TYPICAL	DO
LAST LEVEL BY DESIGNER	DP
CHANGED FROM TYPICAL?	Y
REV 06/22/06 ELOREEOS.6	

UNION PACIFIC
QUALITY PRODUCTIVITY SAFETY
SIGNAL DESIGN

DES:	SSS
DIG:	SSS
CHK:	DLD
A.F.E.	83395
ID:	STL4452.6S

UNION PACIFIC RAILROAD

NELSON, ILLINOIS
TO I&M JCT., ILLINOIS
C.T.C. CIRCUITS

Office of AVP Engineering - Design Omaha, Nebraska

DATE	7/20/07
SHEET	6
DWG	44.52
	STL

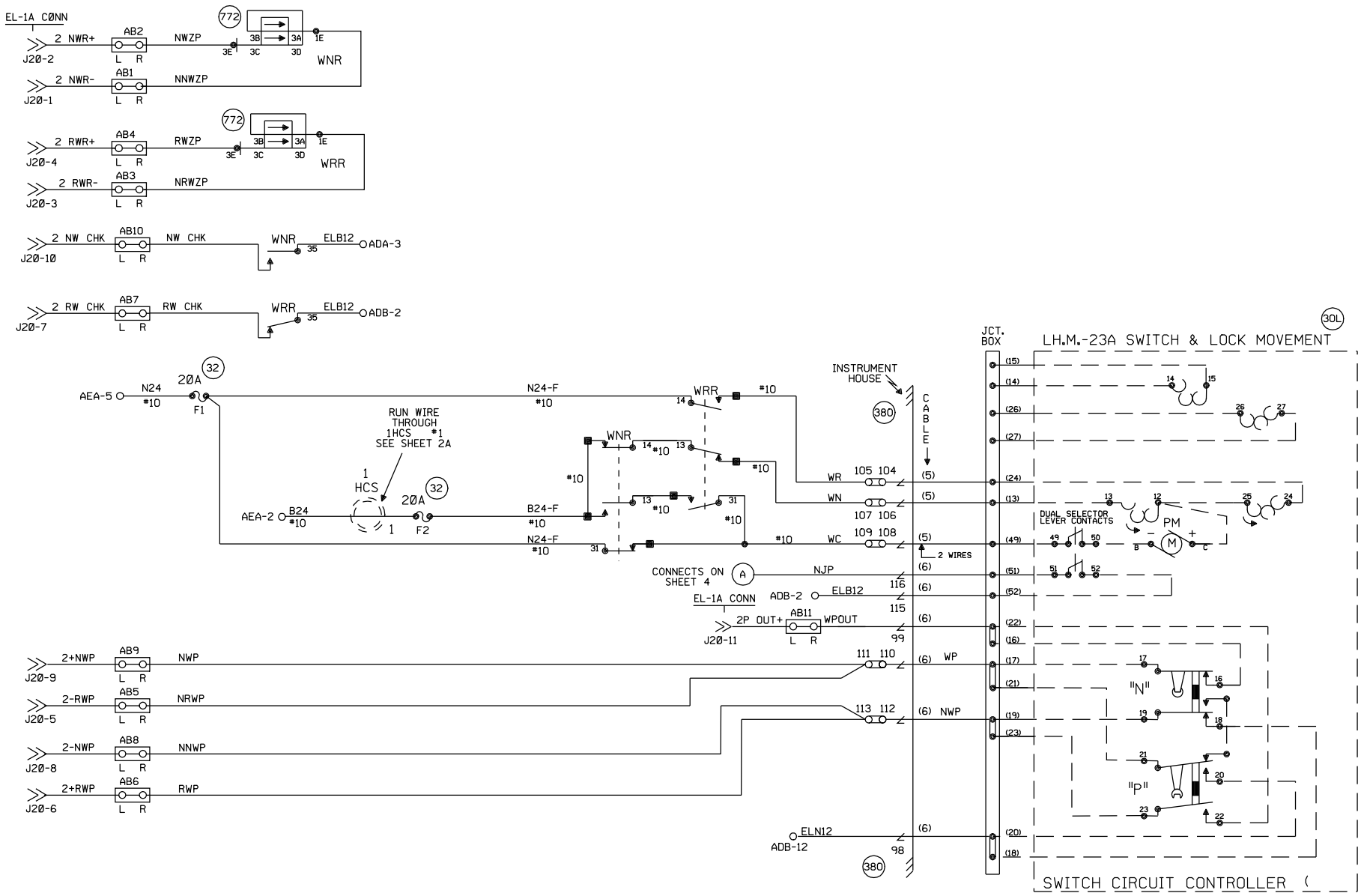

ALL WIRING #16 UNLESS OTHERWISE NOTED

= IN
= OUT

PEORIA SUBDIVISION
CP P44
END OF SIDING
SIGNALS E&W (N&S)
M.P. 44.52
8'X10' HOUSE

NEW SHEET

Designed: 11/03/11
INSTALL FLASHERS, GATES AND CWT AT 100N, M.P. 45.53.
Req#: WO#: 11990
IS: /JTB
/ /NST/JTB

1 7/20/07
INSTALL ELECTROCODE
FROM M.P. 43.00
TO M.P. 61.00
PHASE 1
A.F.E. 83395 DLD/RCB
/ /SSS/RCB

MODIFICATION LEVEL	
Q. A. LAST LEVEL CHECKED	DE
LAST LEVEL MOD THIS TYPICAL	DO
LAST LEVEL BY DESIGNER	DP
CHANGED FROM TYPICAL?	Y
REV 06/22/06 ELOREEOS.7	

UNION PACIFIC
QUALITY PRODUCTIVITY SAFETY
SIGNAL DESIGN

DES: SSS
DIG: SSS
CHK: DLD
A.F.E. 83395
ID: STL4452.7S

UNION PACIFIC RAILROAD

NELSON, ILLINOIS
TO I&M JCT., ILLINOIS
C.T.C. CIRCUITS

Office of AVP Engineering - Design Omaha, Nebraska

DATE 7/20/07
SHEET 7
DWG 44.52
STL

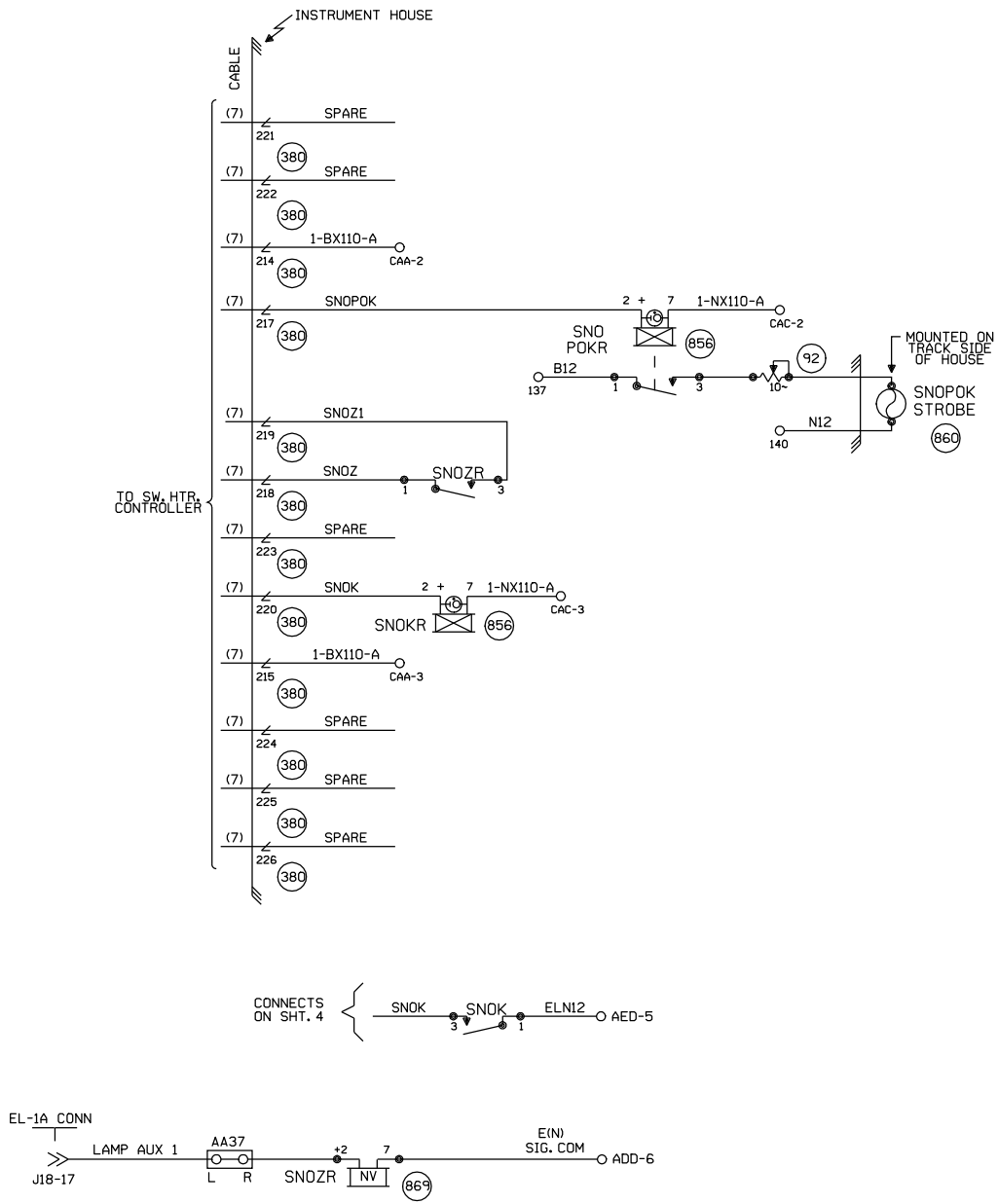

= IN
= OUT

PEORIA SUBDIVISION
CP P44
END OF SIDING
SIGNALS E&W (N&S)
M.P. 44.52
8'X10' HOUSE

NEW SHEET

				Designed: 11/03/11 INSTALL FLASHERS, GATES AND CWT AT 100N, M.P. 45.53. Rec#: WO#: 11990 IS: /JTB /NST/JTB	1 7/20/07 INSTALL ELECTROCODE FROM M.P. 43.00 TO M.P. 61.00 PHASE 1 A.F.E. 83395 DLD/RCB / /SSS/RCB	MODIFICATION LEVEL Q. A. LAST LEVEL CHECKED DE LAST LEVEL MOD THIS TYPICAL DO LAST LEVEL BY DESIGNER DP CHANGED FROM TYPICAL? Y REV 06/22/06 ELOREEDS. 7A	UNION PACIFIC QUALITY PRODUCTIVITY SAFETY SIGNAL DESIGN	DES: SSS DIG: SSS CHK: DLD A.F.E. 83395 ID= STL4452.7AS	UNION PACIFIC RAILROAD NELSON, ILLINOIS TO I&M JCT., ILLINOIS C.T.C. CIRCUITS Office of AVP Engineering - Design Omaha, Nebraska	DATE 7/20/07 SHEET 7A DWG 44.52 STL

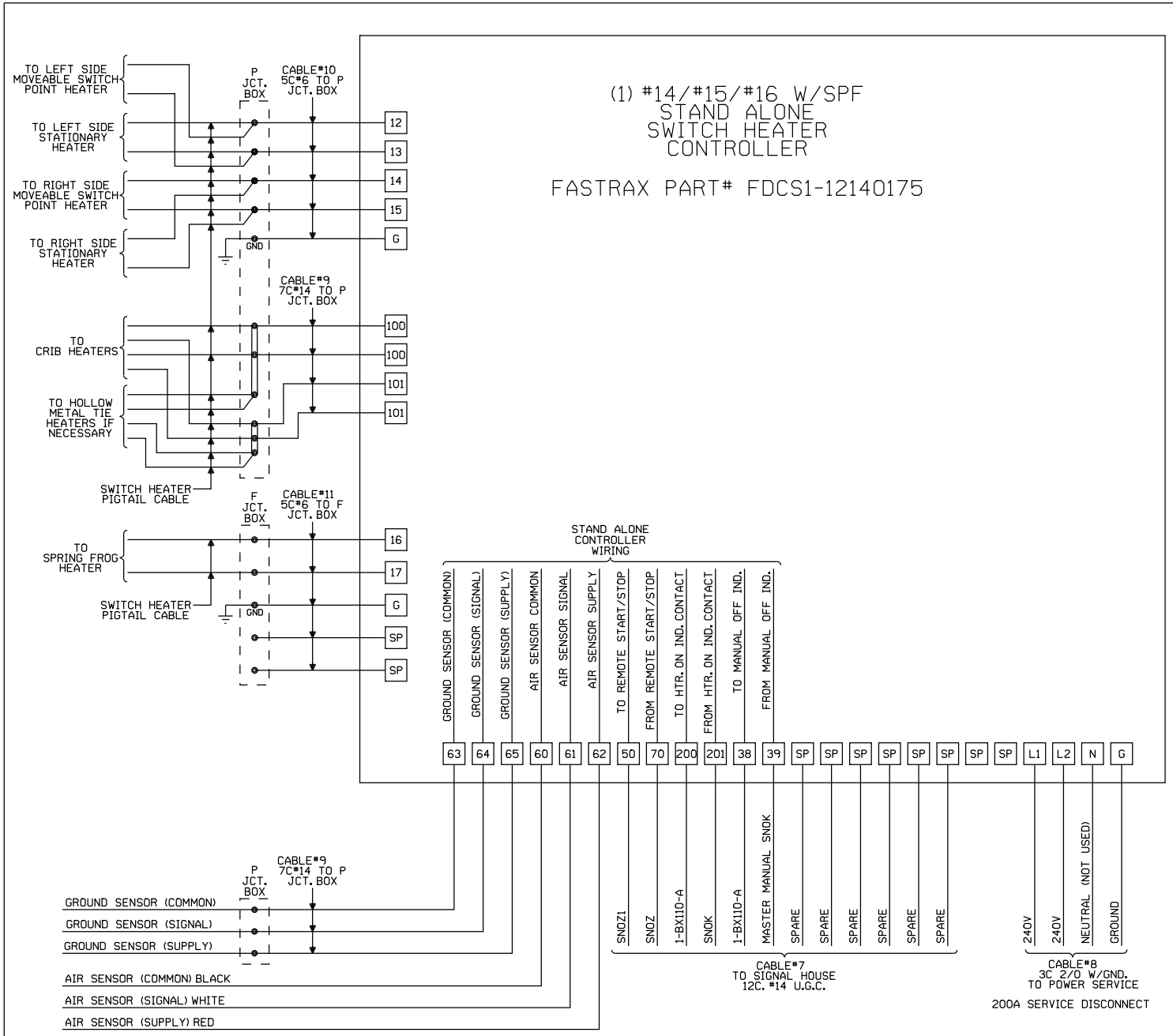

PEORIA SUBDIVISION
CP P44
END OF SIDING
SIGNALS E&W (N&S)
M.P. 44.52
8'X10' HOUSE

NEW SHEET

Designed: 11/03/11
INSTALL FLASHERS, GATES AND CWT AT 100N, M.P. 45.53.
Req#: WO#: 11990
IS: /JTB
/ /NST/JTB

1 7/20/07
INSTALL ELECTROCODE FROM M.P. 43.00 TO M.P. 61.00
PHASE 1
A.F.E. 83395 DLD/RCB
/ /SSS/RCB

MODIFICATION LEVEL	
Q. A. LAST LEVEL CHECKED	DE
LAST LEVEL MOD THIS TYPICAL	DO
LAST LEVEL BY DESIGNER	DP
CHANGED FROM TYPICAL?	Y

REV 06/22/06 ELDREEDS.7C

UNION PACIFIC
SIGNAL DESIGN

DES:	SSS
DIG:	SSS
CHK:	DLD
A.F.E.	83395
ID= STL4452.7BS	

UNION PACIFIC RAILROAD

NELSON, ILLINOIS
TO I&M JCT., ILLINOIS
C.T.C. CIRCUITS

Office of AVP Engineering - Design Omaha, Nebraska

DATE 7/20/07
SHEET 7B
DWG 44.52
STL

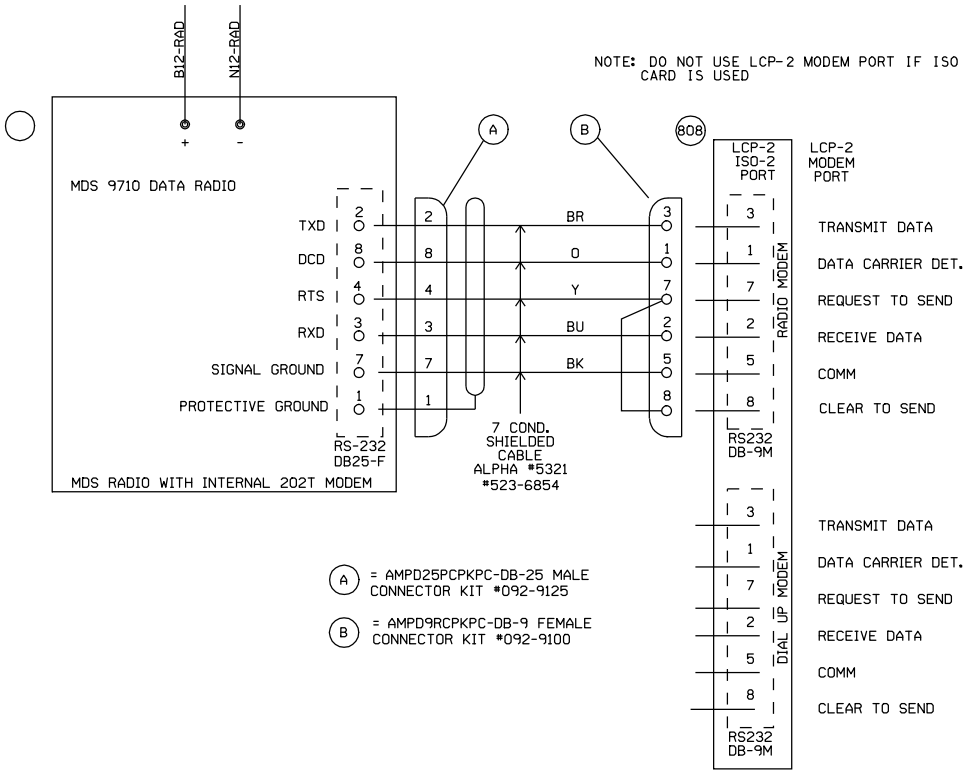

NOTE: DO NOT USE LCP-2 MODEM PORT IF ISO CARD IS USED

	BYTE NOS.		BIT ASSIGNMENT															
			EVEN BYTE								ODD BYTE							
			0	1	2	3	4	5	6	7	8	9	10	11	12	13	14	15
CTRL	0	1	1 NWZ	1 RWZ	AE(N) BLZ	AW(S) BLZ		BW(S) BLZ	E(N) GZ	W(S) GZ	CO GZ			DISP RELZ	DISP REQZ	SNOZ	MCZ	TEST LOOP
IND	0	1	1 NWK	1 RWK	AE(N) BLZK	AW(S) BLZK		BW(S) BLZK	E(N) GK	W(S) GK	1 TK	AE(N) TK	AW(S) TK		BW(S) TK	AE(N) AK	AW(S) AK	
IND	2	3	BW(S) AK				DISP RELK	FRGN REQK	E SFK	W SFK	DISP REQK	K1 1K	LOPK	CARD STAT	(K21K) SW CURR	SNOK	POK	TEST

⊗ = #22 WIRE TWISTED PAIR

CP-
ADDRESS=

NEW SHEET

= IN
= OUT

PEORIA SUBDIVISION
CP P44
END OF SIDING
SIGNALS E&W (N&S)
M.P. 44.52
8'X10' HOUSE

Designed: 11/03/11
INSTALL FLASHERS, GATES AND CWT AT 100N, M.P. 45.53.
Req#: WO#: 11990
IS: /JTB
/ /NST/JTB

1 7/20/07
INSTALL ELECTROCODE
FROM M.P. 43.00
TO M.P. 61.00
PHASE 1
A.F.E. 83395 DLD/RCB
/ /SSS/RCB

MODIFICATION LEVEL	
Q. A. LAST LEVEL CHECKED	DE
LAST LEVEL MOD THIS TYPICAL	DO
LAST LEVEL BY DESIGNER	DP
CHANGED FROM TYPICAL?	Y
REV 06/22/06 ELOREEOS.BSP	

UNION PACIFIC
QUALITY PRODUCTIVITY SAFETY
SIGNAL DESIGN

DES:	SSS
DIG:	SSS
CHK:	DLD
A.F.E.	83395
ID= STL4452.8S	

UNION PACIFIC RAILROAD

NELSON, ILLINOIS
TO I&M JCT., ILLINOIS
C.T.C. CIRCUITS

Office of AVP Engineering - Design Omaha, Nebraska

DATE 7/20/07
SHEET 8
DWG 44.52
STL

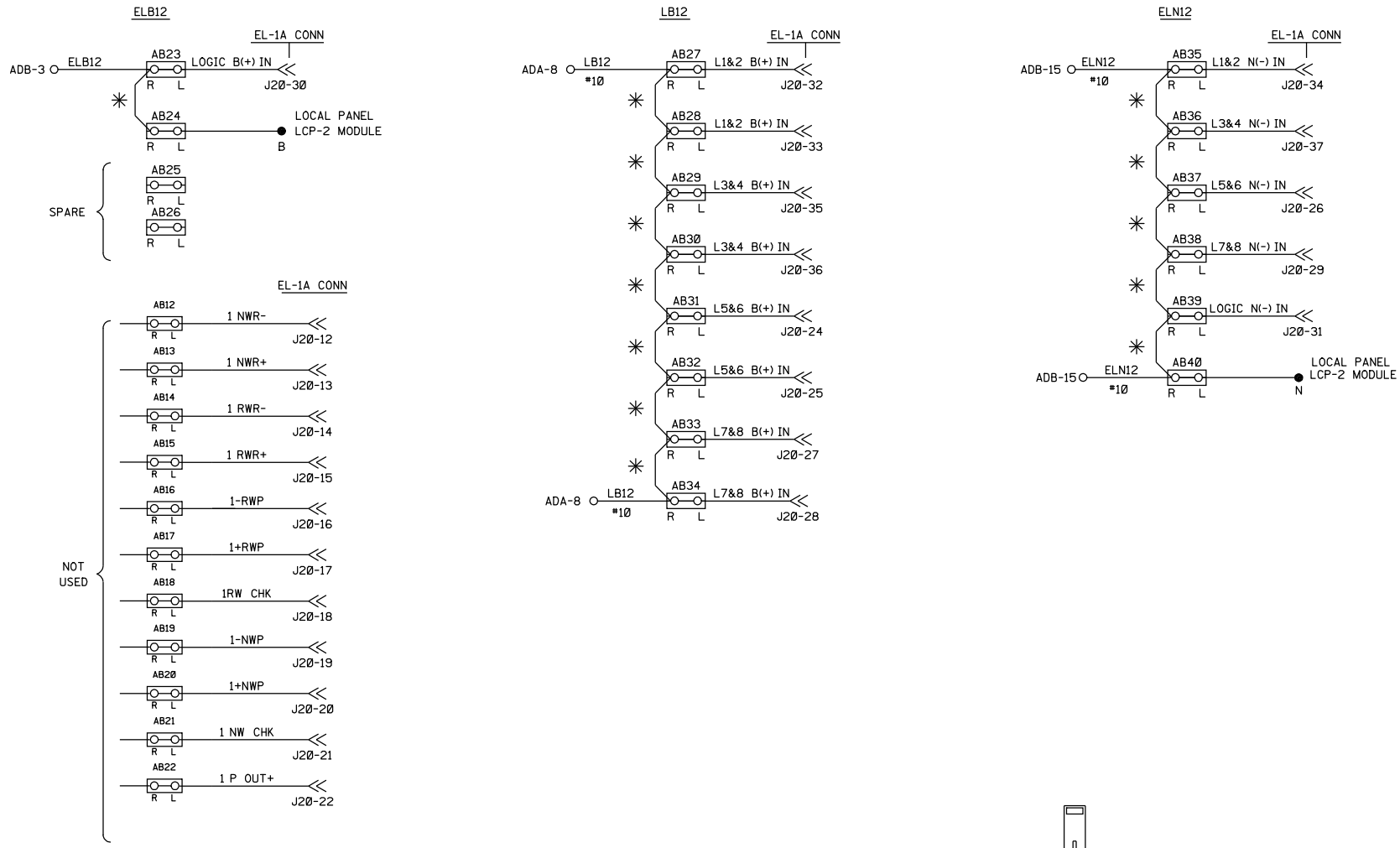

PEORIA SUBDIVISION
CP P44
END OF SIDING
SIGNALS E&W (N&S)
M.P. 44.52
8'X10' HOUSE

NEW SHEET

Designed: 11/03/11
INSTALL FLASHERS, GATES AND CWT AT 100N, M.P. 45.53.
Req#: 11990 /JTB
IS: / /NST/JTB

1 7/20/07
INSTALL ELECTROCODE
FROM M.P. 43.00
TO M.P. 61.00
PHASE 1
A.F.E. 83395 DLD/RCB
/ /SSS/RCB

MODIFICATION LEVEL	
D. A. LAST LEVEL CHECKED	DE
LAST LEVEL MOD THIS TYPICAL	DO
LAST LEVEL BY DESIGNER	DP
CHANGED FROM TYPICAL?	N
REV 06/22/06 ELDREEDS.9	

UNION PACIFIC
QUALITY PRODUCTIVITY SAFETY
SIGNAL DESIGN

DES:	SSS
DIG:	SSS
CHK:	DLD
A.F.E.	83395
ID= STL4452.9S	

UNION PACIFIC RAILROAD

NELSON, ILLINOIS
TO I&M JCT., ILLINOIS
C.T.C. CIRCUITS

Office of AVP Engineering - Design Omaha, Nebraska

DATE 7/20/07
SHEET 9
DWG 44.52
STL

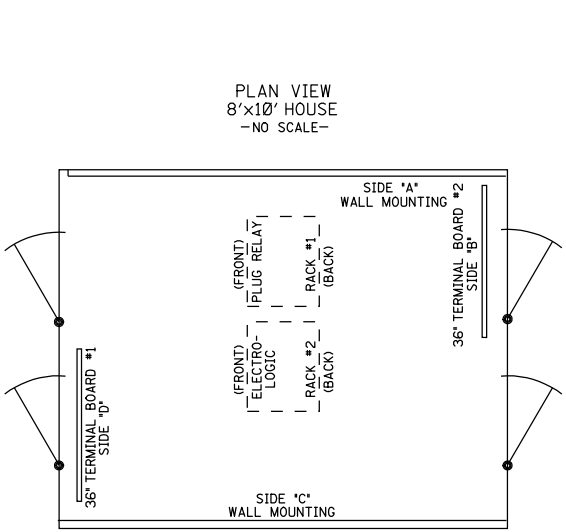

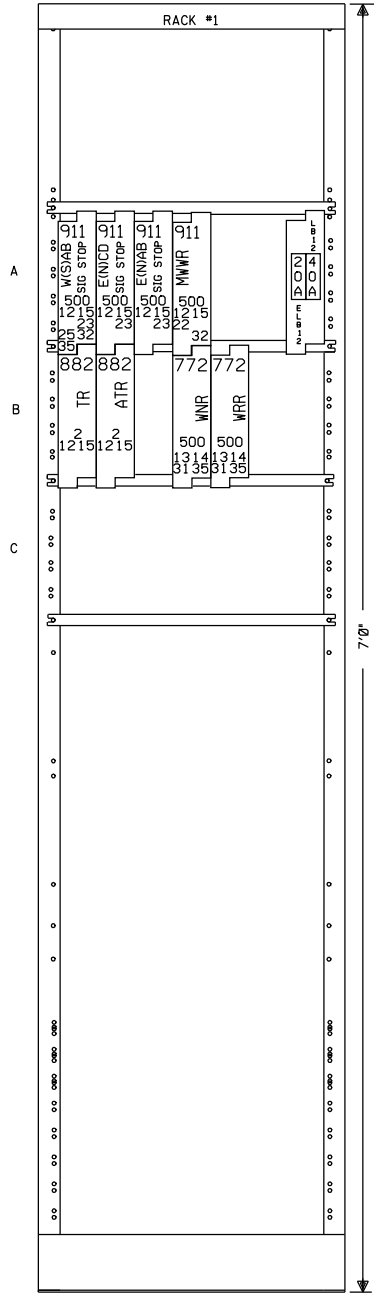

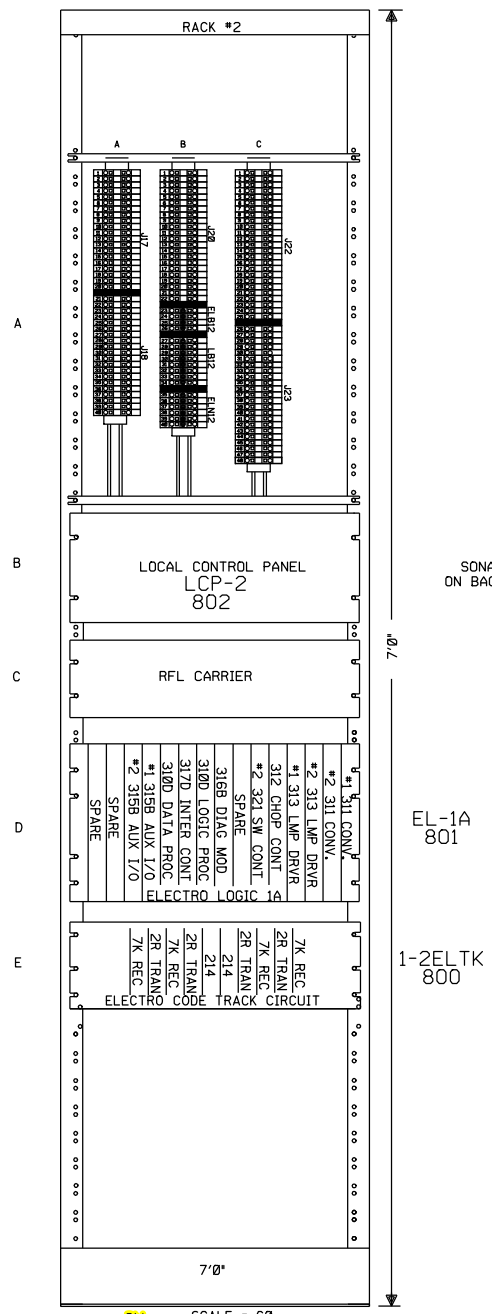

TYPICAL CONTACT CONFIGURATIONS
FOR PLUG-IN RELAYS

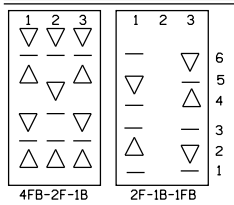

LEGEND

— = CONTACT HEEL

▽ = CONTACT FRONT

△ = CONTACT BACK

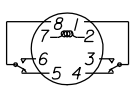

AMPERITE
12DPJ-60C
REAR VIEW

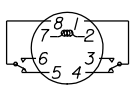

POTTTER &
BRUMFIELD
REAR VIEW

NEW SHEET

— = IN
-x-x- = OUT

PEORIA SUBDIVISION
CP P44
END OF SIDING
SIGNALS E&W (N&S)
M.P. 44.52
8'X10' HOUSE

				Designed: 11/03/11 INSTALL FLASHERS, GATES AND CWT AT 100N, M.P. 45.53. Rec#: WO#: 11990 IS: /JTB /NST/JTB	1 7/20/07 INSTALL ELECTROCODE FROM M.P. 43.00 TO M.P. 61.00 PHASE 1 A.F.E. 83395 DLD/RCB /SSS/RCB	MODIFICATION LEVEL Q. A. LAST LEVEL CHECKED DE LAST LEVEL MOD THIS TYPICAL DO LAST LEVEL BY DESIGNER DP CHANGED FROM TYPICAL? Y REV 06/22/06 ELOREEOS.10	UNION PACIFIC QUALITY PRODUCTIVITY SAFETY SIGNAL DESIGN	DES: SSS DIG: SSS CHK: DLD A.F.E. 83395 ID= STL4452.10S	UNION PACIFIC RAILROAD NELSON, ILLINOIS TO I&M JCT., ILLINOIS C.T.C. CIRCUITS Office of AVP Engineering - Design Omaha, Nebraska	DATE 7/20/07 SHEET 10 DWG 44.52 STL

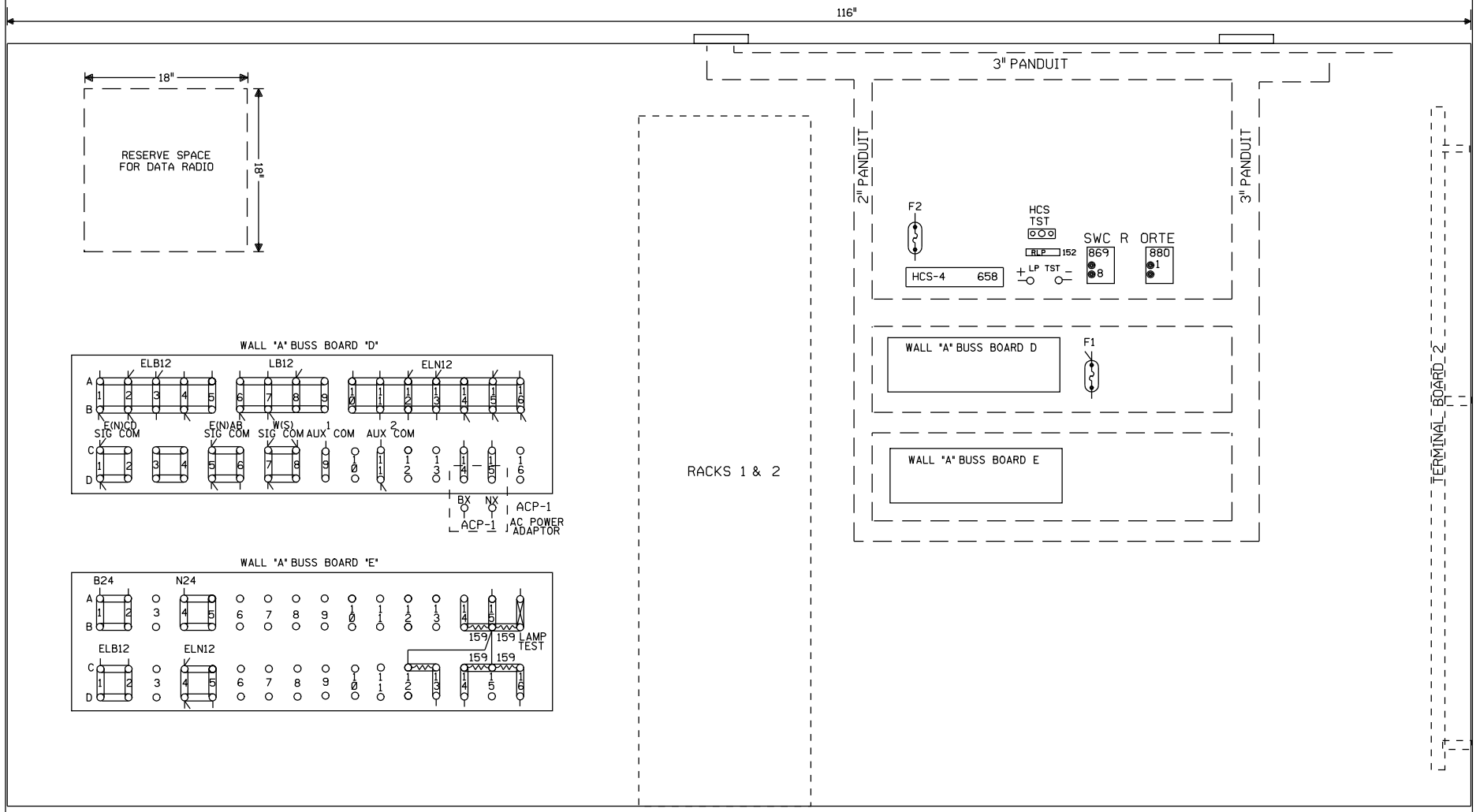
116"
18"
18"
RESERVE SPACE
FOR DATA RADIO
3" PANDUIT
2" PANDUIT
3" PANDUIT
RACKS 1 & 2
F2
HCS
TST
RLP 152
LP TST
SWC R ORTE
869
880
HCS-4 658
WALL "A" BUSS BOARD D
F1
WALL "A" BUSS BOARD E
TERMINAL BOARD 2
WALL "A" BUSS BOARD "D"
ELB12
LB12
ELN12
E(N)CD
E(N)AB
W(S)
SIG COM
SIG COM
SIG COM
AUX COM
AUX COM
BX
NX
ACP-1
ACP-1
AC POWER
ADAPTOR
WALL "A" BUSS BOARD "E"
B24
N24
ELB12
ELN12
159
159 LAMP
TEST
159
159
0
1
2
3
4 FEET
SCALE: 1.5 INCHES = 1 FOOT
NEW SHEET
= IN
= OUT
PEORIA SUBDIVISION
CP P44
END OF SIDING
SIGNALS E&W (N&S)
M.P. 44.52
8'X10' HOUSE
Designed: 11/03/11
INSTALL FLASHERS,
GATES AND CWT AT
100N, M.P. 45.53.
Req'd:
1St
WO#: 11990
/JTB
/ /NS1/JTB
1 7/20/07
INSTALL ELECTROCODE
FROM M.P. 43.00
TO M.P. 61.00
PHASE 1
A.F.E. 83395
DLD/RCB
/ /SSS/RCB
MODIFICATION LEVEL
Q. A. LAST LEVEL CHECKED DE
LAST LEVEL MOD THIS TYPICAL DO
LAST LEVEL BY DESIGNER DP
CHANGED FROM TYPICAL? Y
REV 06/22/06 ELOREEOS.11
UNION PACIFIC
QUALITY PRODUCTIVITY SAFETY
SIGNAL DESIGN
DES: SSS
DIG: SSS
CHK: DLD
A.F.E. 83395
ID= STL4452.11S
UNION PACIFIC RAILROAD
NELSON, ILLINOIS
TO I&M JCT., ILLINOIS
C.T.C. CIRCUITS
Office of AVP Engineering - Design
Omaha, Nebraska
DATE 7/20/07
SHEET 11
DWG 44.52
STL

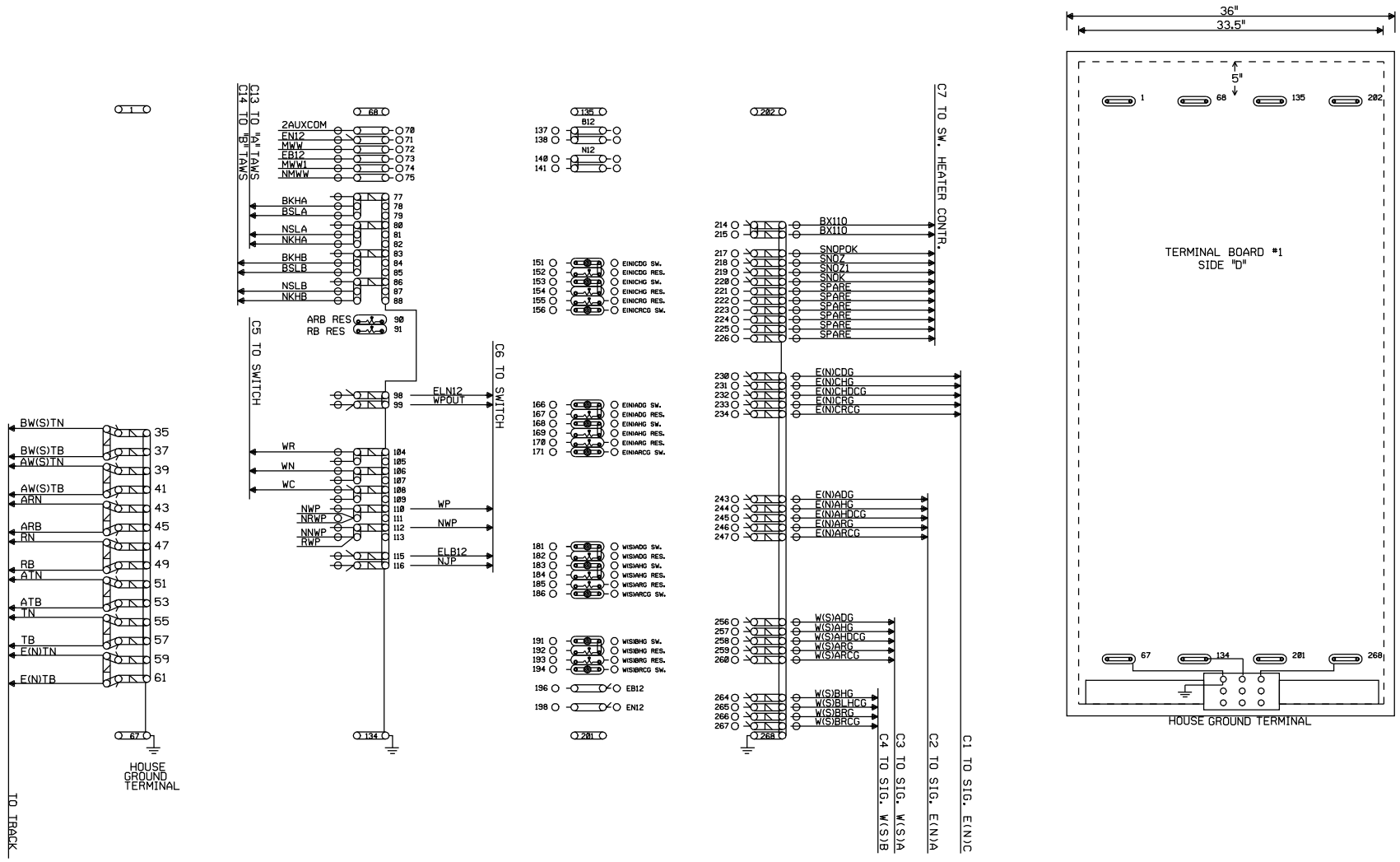

SEE SIGNAL STANDARD
DRAWING SD45A.2 FOR
HOUSE GROUNDING SCHEME

NEW SHEET

= IN
= OUT

PEORIA SUBDIVISION
CP P44
END OF SIDING
SIGNALS E&W (N&S)
M.P. 44.52
8'X10' HOUSE

Designed: 11/03/11
INSTALL FLASHERS, GATES AND CWT AT 100N, M.P. 45.53.
Rec#: WO#: 11990
IS: /JTB
/NST/JTB

1 7/20/07
INSTALL ELECTROCODE
FROM M.P. 43.00
TO M.P. 61.00
PHASE 1
A.F.E. 83395
DLD/RCB
/SSS/RCB

MODIFICATION LEVEL	
Q. A. LAST LEVEL CHECKED	DE
LAST LEVEL MOD THIS TYPICAL	DO
LAST LEVEL BY DESIGNER	DP
CHANGED FROM TYPICAL?	Y

REV 06/22/06 ELOREEDS.12

UNION PACIFIC
QUALITY PRODUCTIVITY SAFETY
SIGNAL DESIGN

DES:	SSS
DIG:	SSS
CHK:	DLD
A.F.E.	83395
ID= STL4452.12S	

UNION PACIFIC RAILROAD
NELSON, ILLINOIS
TO I&M JCT., ILLINOIS
C.T.C. CIRCUITS
Office of AVP Engineering - Design Omaha, Nebraska

DATE 7/20/07
SHEET 12
DWG 44.52
STL

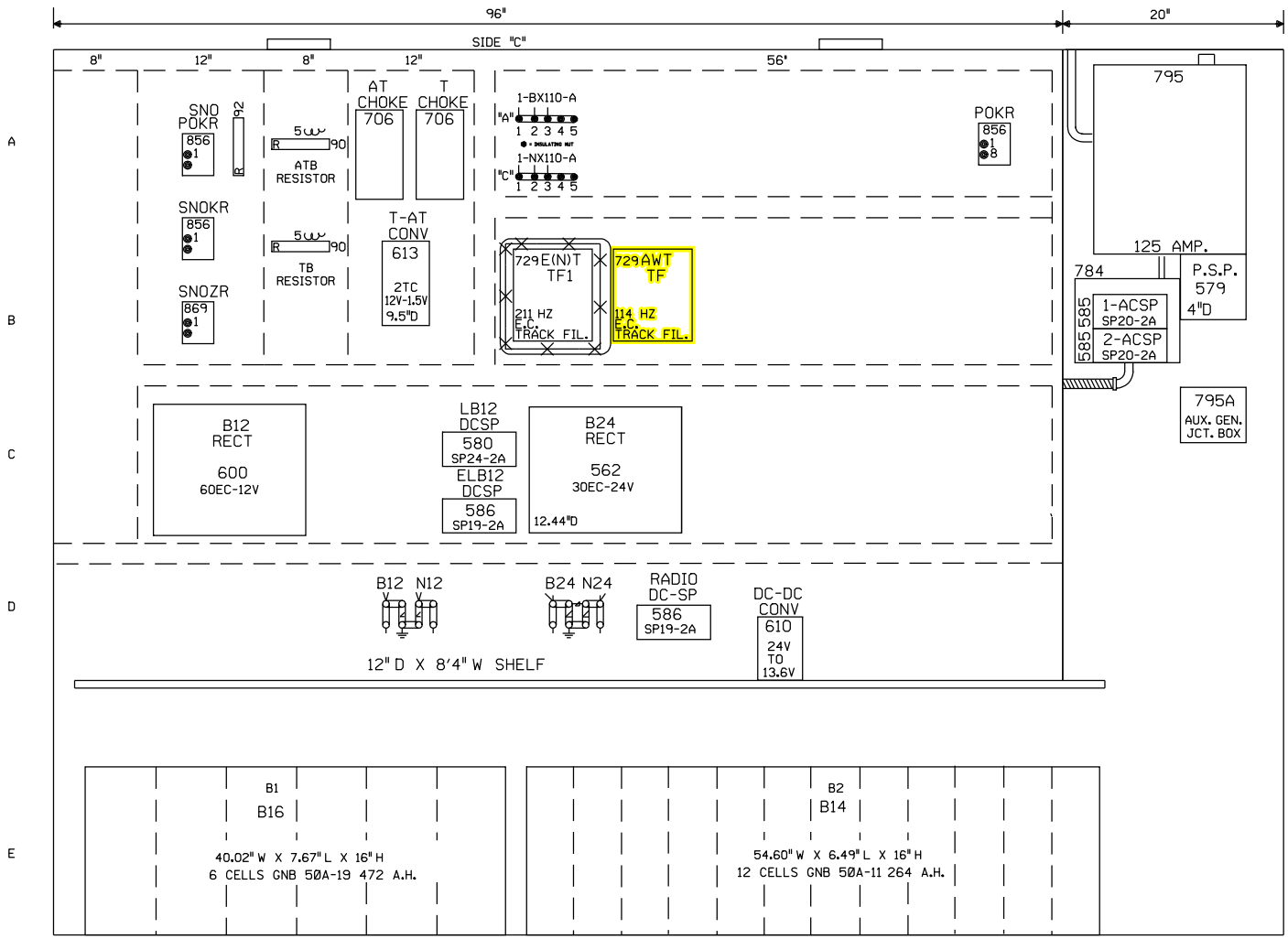

= IN
= OUT

= EXISTING/REVISE ORIGINALS IF A.C.'D

0 1 2 3 4 FEET

SCALE: 1.5 INCHES = 1 FOOT

NEW SHEET

PEORIA SUBDIVISION
CP P44
END OF SIDING
SIGNALS E&W (N&S)
M.P. 44.52
8'X10' HOUSE

Designed: 11/03/11
INSTALL FLASHERS, GATES AND CWT AT 100N, M.P. 45.53.
Rec#: IS: WO#: 11990 /JTB /NST/JTB

1 7/20/07
INSTALL ELECTROCODE FROM M.P. 43.00 TO M.P. 61.00 PHASE 1
A.F.E. 83395
DLD/RCB /SSS/RCB

MODIFICATION LEVEL	
Q. A. LAST LEVEL CHECKED	DE
LAST LEVEL MOD THIS TYPICAL	DO
LAST LEVEL BY DESIGNER	DP
CHANGED FROM TYPICAL?	Y

REV 06/22/06 ELOREEDS.13

UNION PACIFIC
QUALITY PRODUCTIVITY SAFETY
SIGNAL DESIGN

DES:	SSS
DIG:	SSS
CHK:	DLD
A.F.E.	83395
ID= STL4452.13S	

UNION PACIFIC RAILROAD
NELSON, ILLINOIS
TO I&M JCT., ILLINOIS
C.T.C. CIRCUITS
Office of AVP Engineering - Design Omaha, Nebraska

DATE 7/20/07
SHEET 13
DWG 44.52
STL