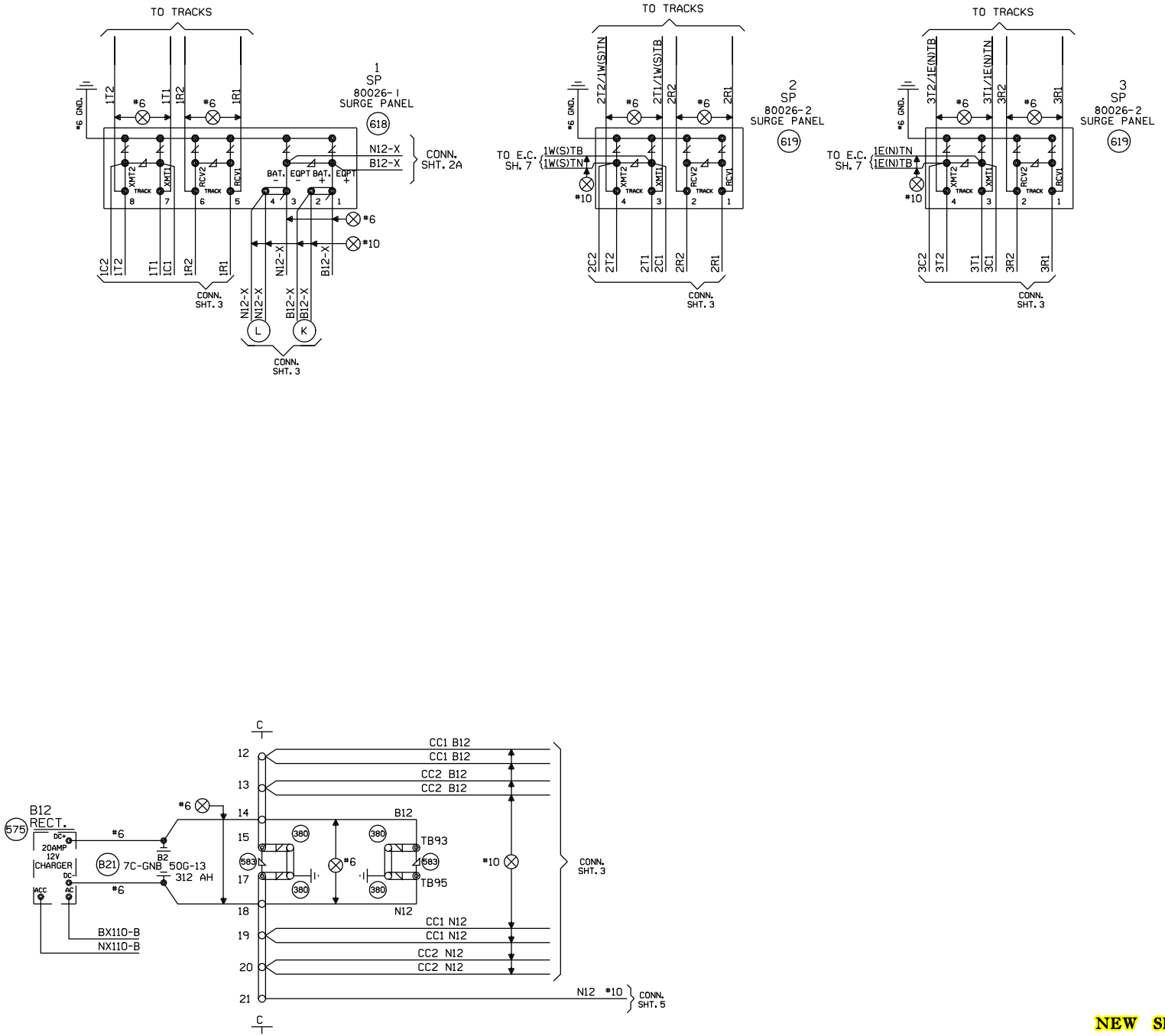

NEW SHEET

Designed: 11/03/11 INSTALL FLASHERS, GATES AND CWT AT 100N, M.P. 45.53. Rec#: WO#: 11990 IS: /JTB /NST/JTB	MODIFICATION LEVEL Q. A. LAST LEVEL CHECKED DU LAST LEVEL MOD THIS TYPICAL DU LAST LEVEL BY DESIGNER DU CHANGED FROM TYPICAL? Y REV 01.24.11 4K 4TKSPGFC.4	UNION PACIFIC QUALITY PRODUCTIVITY SAFETY SIGNAL DESIGN	Date: 11/03/11 Des: NST Chk: JTB AFE: 11990	UNION PACIFIC RAILROAD CAMPGROVE, ILLINOIS 100N PEORIA SUBDIVISION Office of Sr AVP Engineering - Signal/TCO Omaha, Nebraska	Sh.: 4 DOT 175678F MP: 45.53 ID: STL4553.4X			

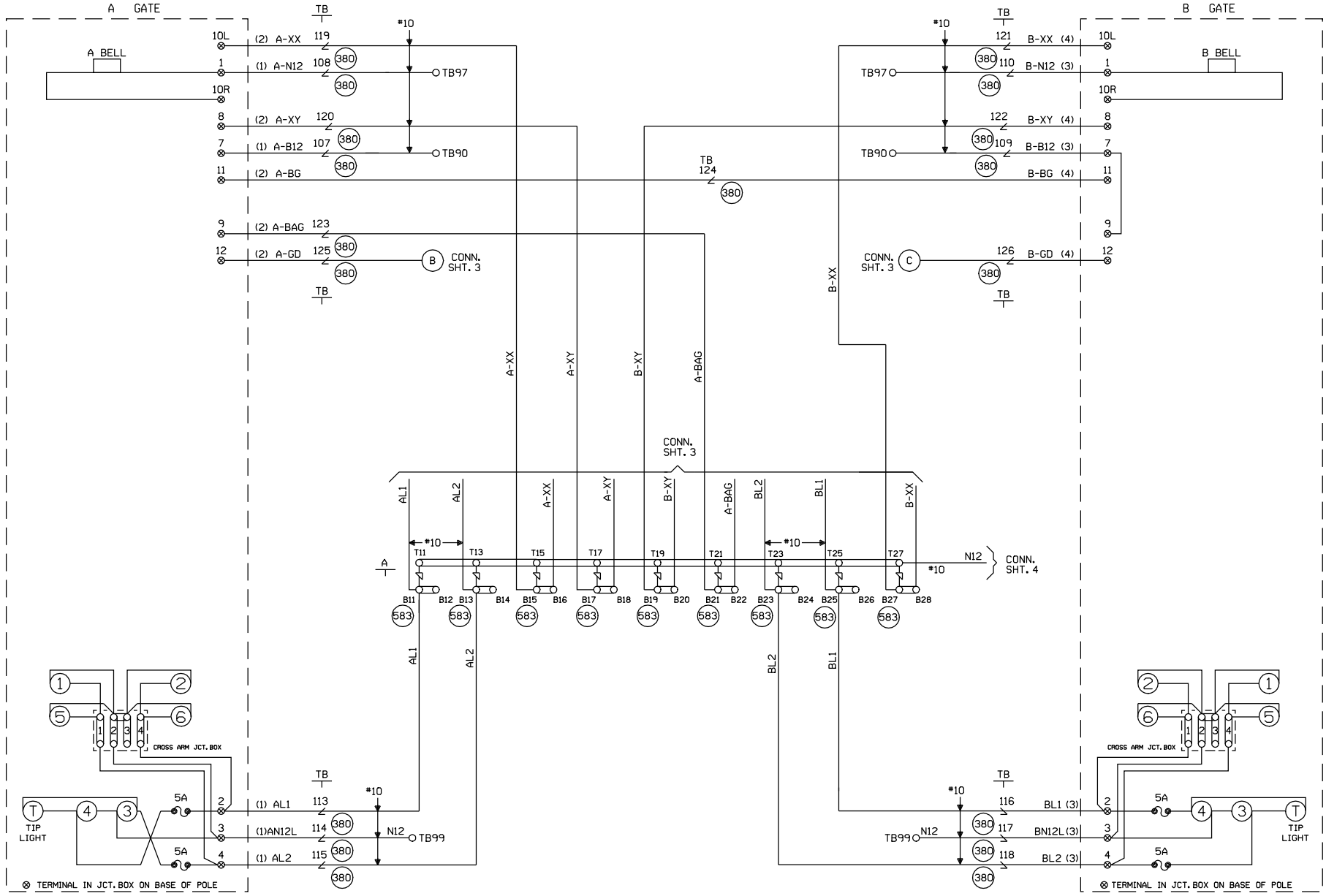

CABLE TABULATION

CABLE NO. 1 5C. NO.6 U.G.B.T. TO GATE A
CABLE NO. 2 7C. NO.14 U.G.B.T. TO GATE A
CABLE NO. 3 5C. NO.6 U.G.B.T. TO GATE B
CABLE NO. 4 7C. NO.14 U.G.B.T. TO GATE B

NEW SHEET

Designed: 11/03/11
INSTALL FLASHERS, GATES AND CWT AT 100N, M.P. 45.53.
Rec#: WO#: 11990
IS: /JTB /NST/JTB

MODIFICATION LEVEL	
Q. A. LAST LEVEL CHECKED	DU
LAST LEVEL MOD THIS TYPICAL	DU
LAST LEVEL BY DESIGNER	DU
CHANGED FROM TYPICAL?	Y

REV 01.24.11 4K GFCTYP.5

UNION PACIFIC
QUALITY PRODUCTIVITY SAFETY
SIGNAL DESIGN

Date:	11/03/11
Des:	NST
Chk:	JTB
AFE:	11990

UNION PACIFIC RAILROAD
CAMPGROVE, ILLINOIS
100N
PEORIA SUBDIVISION
Office of Sr AVP Engineering - Signal/TCO Omaha, Nebraska

Sh.:	5
DOT	175678F
MP:	45.53
ID:	STL4553.5X

WCH 3593-E

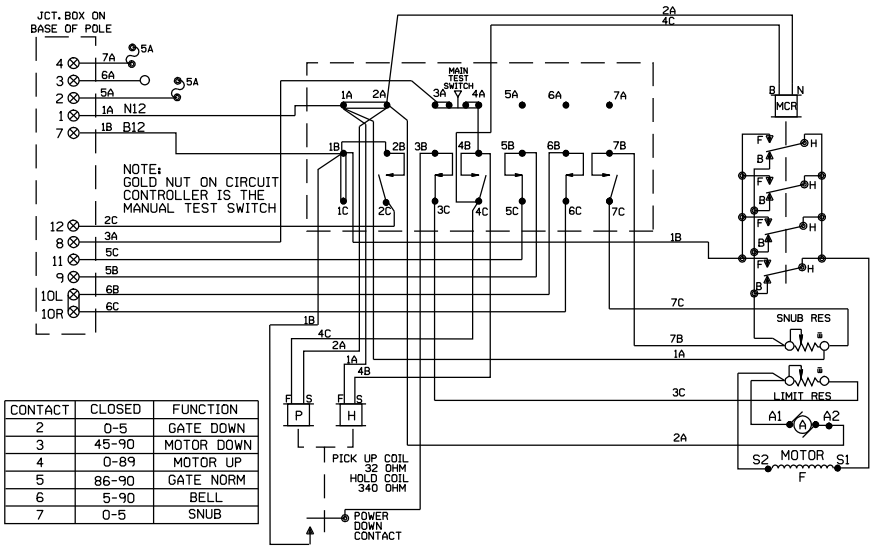

CONTACT	CLOSED	FUNCTION
2	0-5	GATE DOWN
3	45-90	MOTOR DOWN
4	0-89	MOTOR UP
5	86-90	GATE NORM
6	5-90	BELL
7	0-5	SNUB

WCH 3597-E

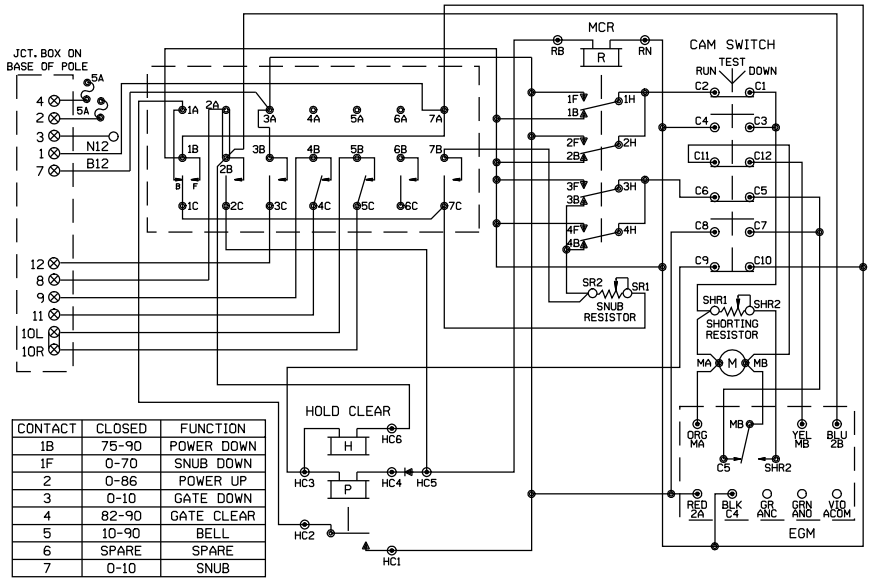

CONTACT	CLOSED	FUNCTION
1B	75-90	POWER DOWN
1F	0-70	SNUB DOWN
2	0-86	POWER UP
3	0-10	GATE DOWN
4	82-90	GATE CLEAR
5	10-90	BELL
6	SPARE	SPARE
7	0-10	SNUB

WCH 3597-RB

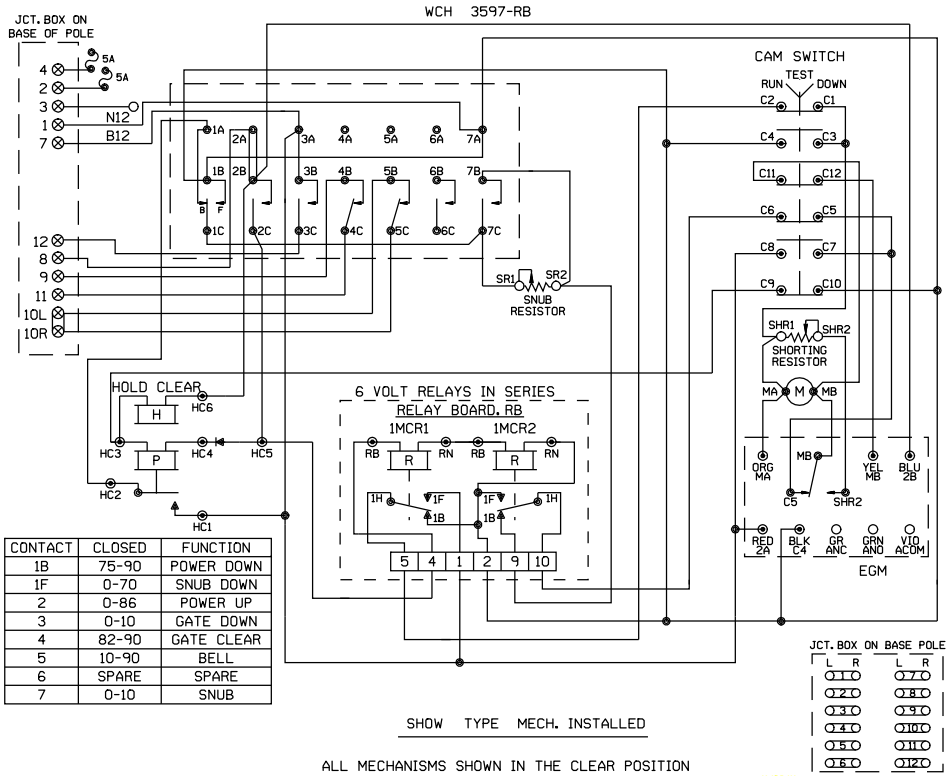

CONTACT	CLOSED	FUNCTION
1B	75-90	POWER DOWN
1F	0-70	SNUB DOWN
2	0-86	POWER UP
3	0-10	GATE DOWN
4	82-90	GATE CLEAR
5	10-90	BELL
6	SPARE	SPARE
7	0-10	SNUB

SHOW TYPE MECH. INSTALLED

ALL MECHANISMS SHOWN IN THE CLEAR POSITION

SAFETRAN S-60

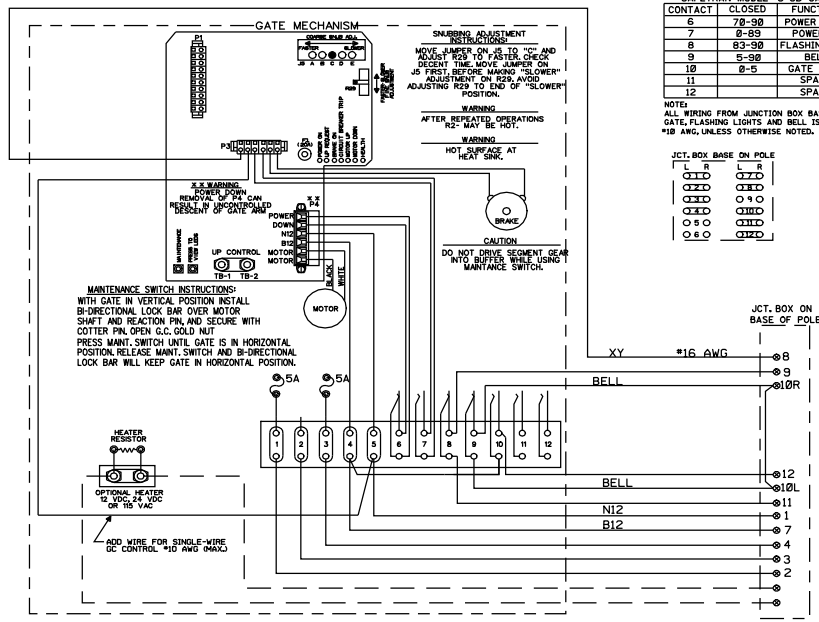

SAFETRAN MODEL "S-60" GATE

CONTACT	CLOSED	FUNCTION
6	70-90	POWER DOWN
7	0-89	POWER UP
8	83-90	FLASHING LGT.
9	5-90	BELL
10	0-5	GATE DOWN
11		SPARE
12		SPARE

NOTE:
ALL WIRING FROM JUNCTION BOX BASE TO GATE, FLASHING LIGHTS AND BELL IS TO BE #10 AWG, UNLESS OTHERWISE NOTED.

JCT. BOX BASE ON POLE

NEW SHEET

Designed: 11/03/11
INSTALL FLASHERS, GATES AND CWT AT 100N, M.P. 45.53.
Rec#: WO#: 11990
IS: /JTB
/NST/JTB

MODIFICATION LEVEL	
Q. A. LAST LEVEL CHECKED	DU
LAST LEVEL MOD THIS TYPICAL	DU
LAST LEVEL BY DESIGNER	DU
CHANGED FROM TYPICAL?	N

REV 01.24.11 4K GWIRING.7

UNION PACIFIC
QUALITY PRODUCTIVITY SAFETY
SIGNAL DESIGN

Date: 11/03/11
Des: NST
Chk: JTB
AFE: 11990

UNION PACIFIC RAILROAD

CAMPGROVE, ILLINOIS
100N
PEORIA SUBDIVISION

Office of Sr AVP Engineering - Signal/TCO Omaha, Nebraska

Sh.: 6
DOT 175678F
MP: 45.53
ID: STL4553.6X

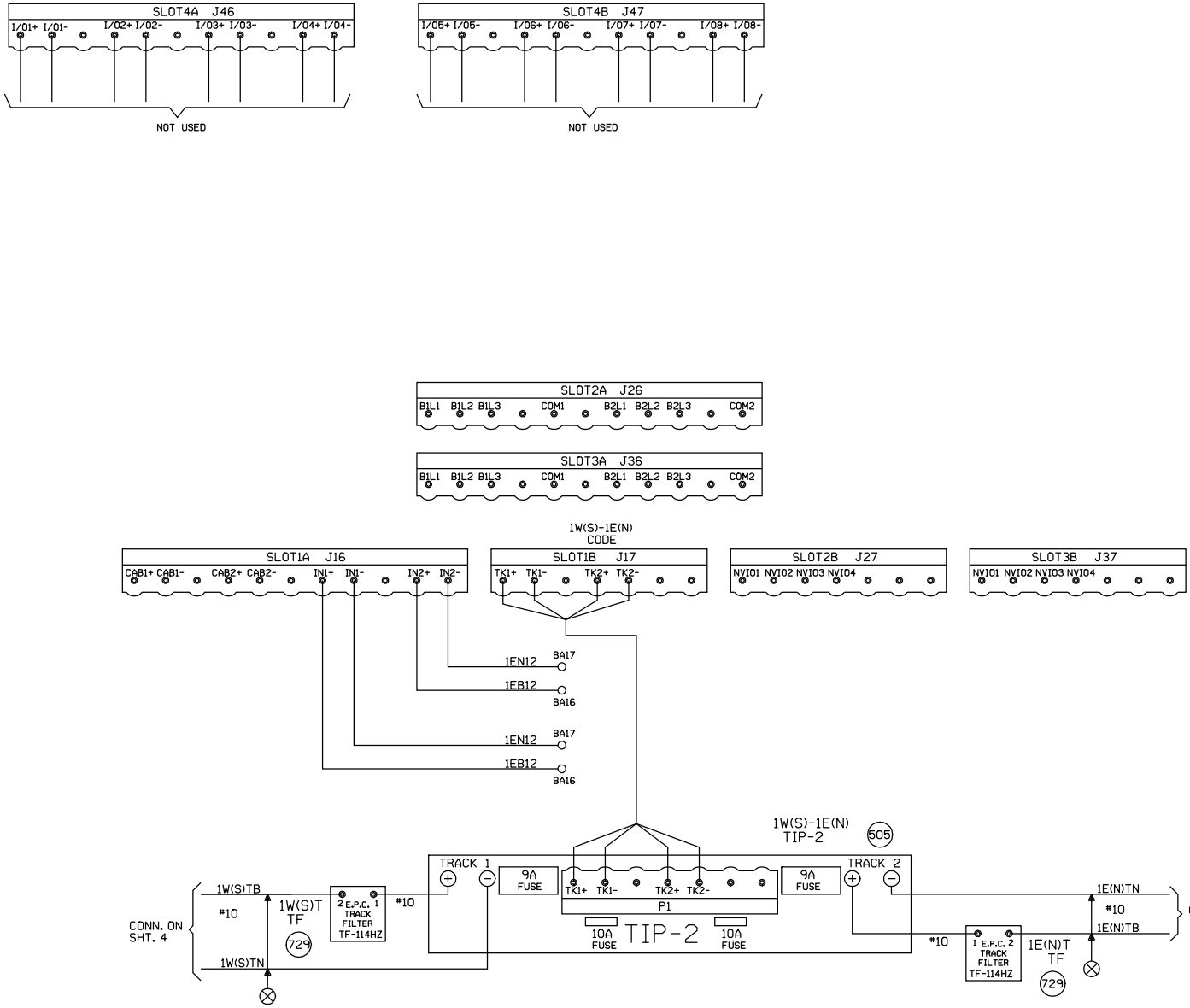

NOTES:

⊘ = OBSERVE CORRECT POLARITY EQUIPMENT WILL BE DAMAGED IF CONNECTIONS ARE REVERSED.

⊗ = TWISTED WIRES.

ALL WIRING TO TRACK 2C.NO.6 U.G.B.T. CABLE

ALL HOUSE WIRING TO BE NO.16 UNLESS OTHERWISE SPECIFIED

REFER TO STANDARDS DRAWING FOR HOUSE GROUNDING SCHEME.

ALL GROUND CONNECTIONS TO BE #6 OR LARGER, SIGNAL WIRING SHOP TO RUN ALL GROUND CONNECTIONS.

ENSURE TRACK POLARITY IS TRANSPOSED ACROSS ALL INSULATED JOINTS.

⧗ = TEST TERMINALS MUST BE INSTALLED ON ALL WIRING CONNECTED TO EXTERNAL CABLES (EXCEPT TRACK AND A.C. POWER WIRES).

SHOW ACTUAL DED INSTALLED LOCATION ON DRAWING.

PORTABLE GENERATOR EXTENSION CORD FOR 240V TO 240V IS PROVIDED AS WELL AS A 120V TO 240V ADAPTER.

NEW SHEET

Designed: 11/03/11
INSTALL FLASHERS, GATES AND CWT AT 100N, M.P. 45.53.
Rec#: IS: WO#: 11990 /JTB /NST/JTB

MODIFICATION LEVEL	
Q. A. LAST LEVEL CHECKED	DQ
LAST LEVEL MOD THIS TYPICAL	DQ
LAST LEVEL BY DESIGNER	DU
CHANGED FROM TYPICAL?	Y

REV 02/01/08 1TE51NTC.1

UNION PACIFIC
QUALITY PRODUCTIVITY SAFETY
SIGNAL DESIGN

Date:	11/03/11
Des:	NST
Chk:	JTB
AFE:	11990

UNION PACIFIC RAILROAD

CAMPGROVE, ILLINOIS
100N
PEORIA SUBDIVISION

Office of Sr AVP Engineering - Signal/TCO Omaha, Nebraska

Sh.:	7
DOT	175678F
MP:	45.53
ID:	STL4553.7S

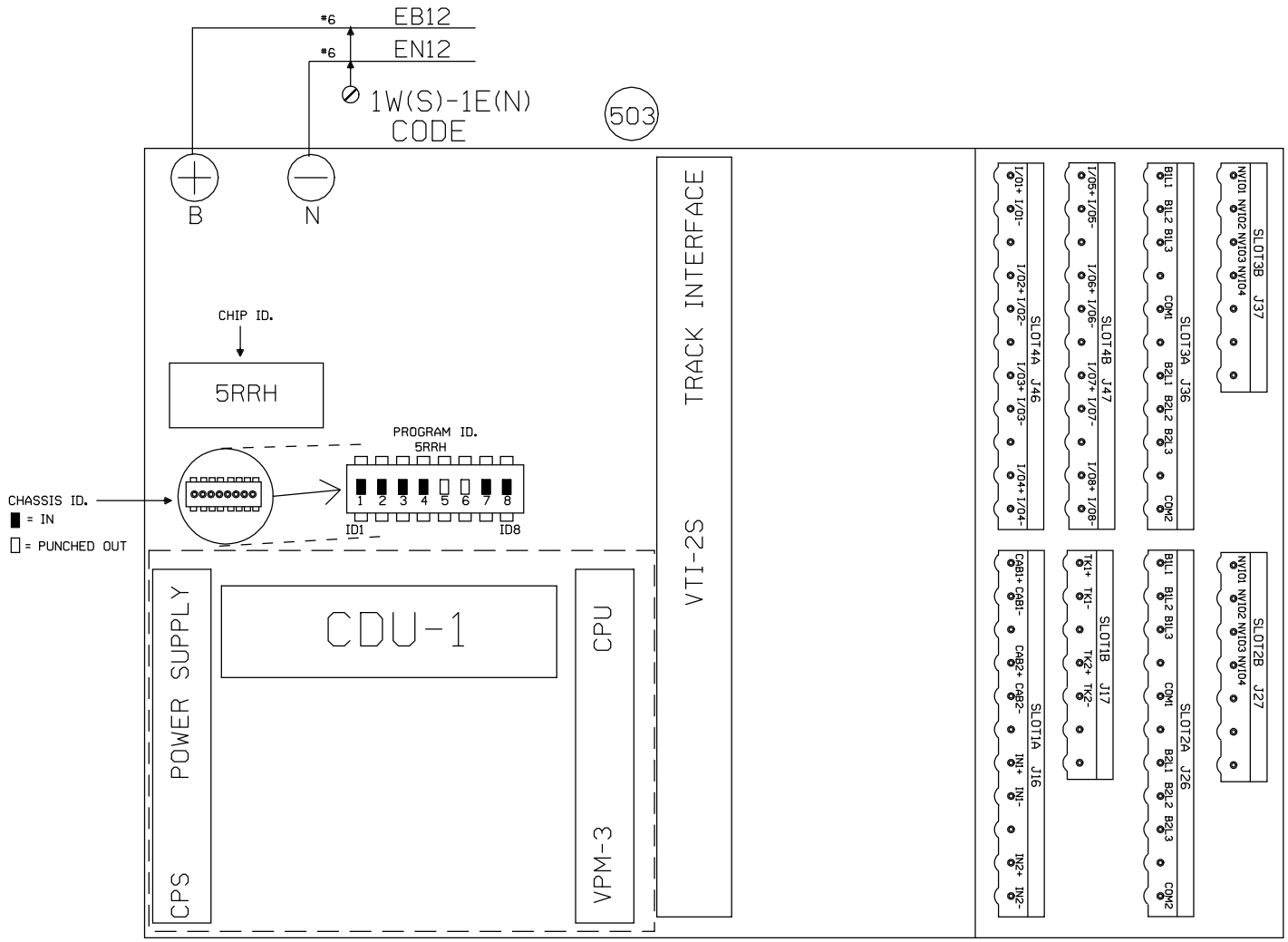

CODE 5
OPERATION SETTINGS

LC1SW FALSE	L ALT-5 FALSE
LC5SW FALSE	R ALT-5 FALSE
RC1SW FALSE	
RC5SW FALSE	

NEW SHEET

Designed: 11/03/11
INSTALL FLASHERS, GATES AND CWT AT 100N, M.P. 45.53.
Rec#: WO#: 11990
IS: /JTB /NST/JTB

MODIFICATION LEVEL	
Q. A. LAST LEVEL CHECKED	DQ
LAST LEVEL MOD THIS TYPICAL	DQ
LAST LEVEL BY DESIGNER	DU
CHANGED FROM TYPICAL?	Y

REV 02/01/08 1TE51NTC.3

UNION PACIFIC
QUALITY PRODUCTIVITY SAFETY
SIGNAL DESIGN

Date: 11/03/11
Des: NST
Chk: JTB
AFE: 11990

UNION PACIFIC RAILROAD
CAMPGROVE, ILLINOIS
100N
PEORIA SUBDIVISION
Office of Sr AVP Engineering - Signal/TCO Omaha, Nebraska

Sh.: 8
DOT 175678F
MP: 45.53
ID: STL4553.8S

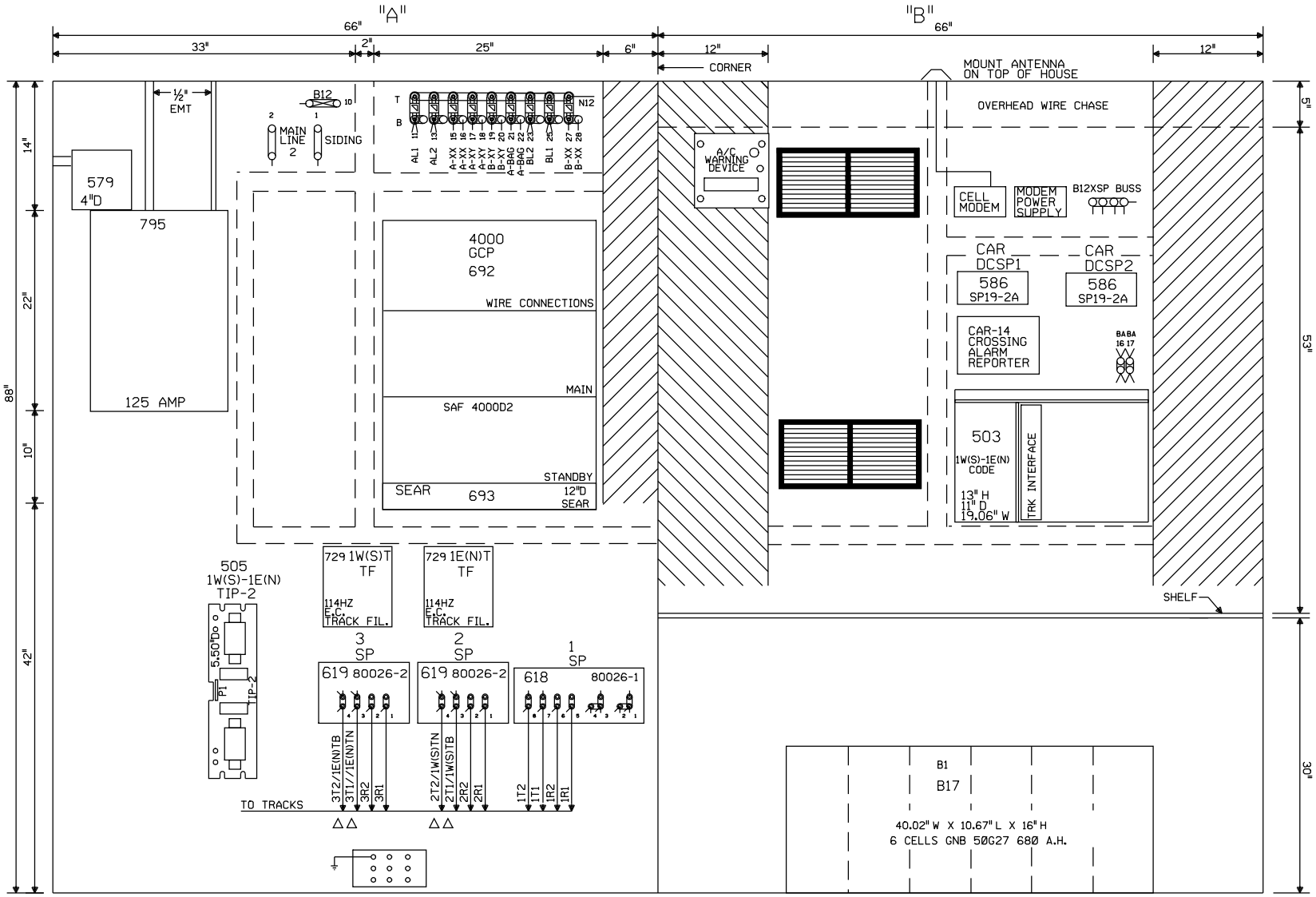

Δ = ENSURE TRACK POLARITY IS TRANSPOSED ACCROSS ALL INSULATED JOINTS.

NOTE: ALL DIMENSIONS SHOWN ARE APPROXIMATE.

NEW SHEET

Designed: 11/03/11 INSTALL FLASHERS, GATES AND CWT AT 100N, M.P. 45.53. Rec#: IS: WO#: 11990 /NST/JTB	MODIFICATION LEVEL		UNION PACIFIC QUALITY PRODUCTIVITY SAFETY SIGNAL DESIGN	Date: 11/03/11 Des: NST Chk: AFE: 11990	UNION PACIFIC RAILROAD CAMPGROVE, ILLINOIS 100N PEORIA SUBDIVISION Office of Sr AVP Engineering - Signal/TCO Omaha, Nebraska	Sh.: 9 DOT 175678F MP: 45.53 ID: STL4553.9X
	Q.A. LAST LEVEL CHECKED	DU				
	LAST LEVEL MOD THIS TYPICAL	DU				
	LAST LEVEL BY DESIGNER	DU				
	CHANGED FROM TYPICAL?	Y				
	REV 01.24.11 4K 4TKGFC.8					

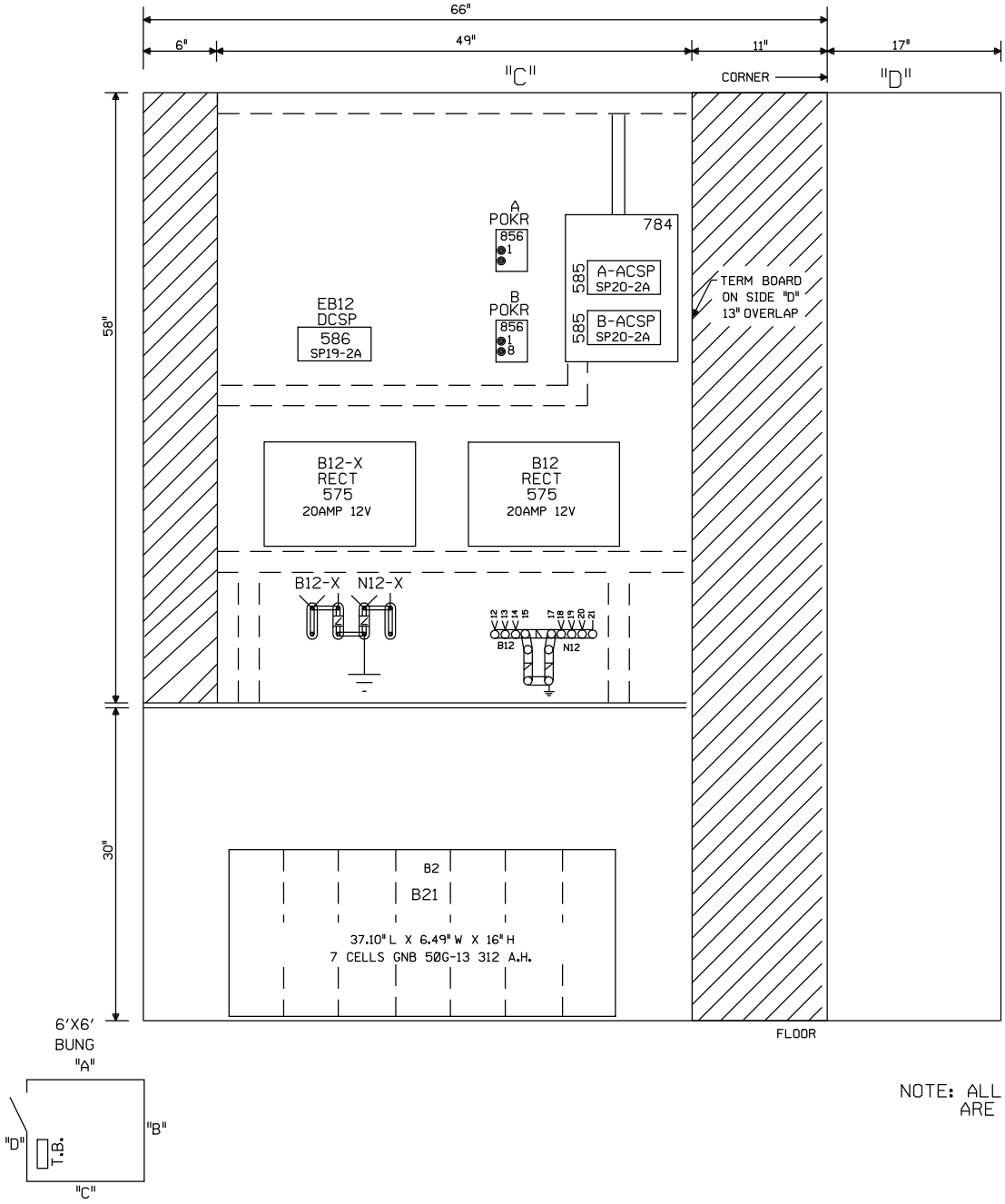

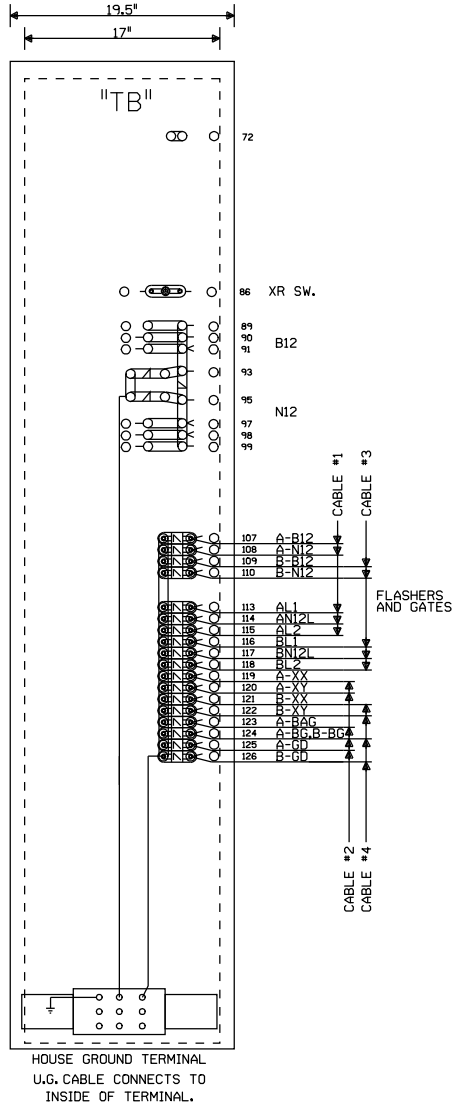

NOTE: ALL DIMENSIONS SHOWN
ARE APPROXIMATE.

NEW SHEET

Designed: 11/03/11
INSTALL FLASHERS, GATES AND CWT AT 100N, M.P. 45.53.
Rec#: WO#: 11990
IS: /JTB
/NST/JTB

MODIFICATION LEVEL	
Q.A. LAST LEVEL CHECKED	DU
LAST LEVEL MOD THIS TYPICAL	DU
LAST LEVEL BY DESIGNER	DU
CHANGED FROM TYPICAL?	Y
REV 01.24.11 4K GFC.9	

UNION PACIFIC
QUALITY PRODUCTIVITY SAFETY
SIGNAL DESIGN

Date:	11/03/11
Des:	NST
Chk:	JTB
AFE:	11990

UNION PACIFIC RAILROAD
CAMPGROVE, ILLINOIS
100N
PEORIA SUBDIVISION
Office of Sr AVP Engineering - Signal/TCO Omaha, Nebraska

Sh.:	10
DOT	175678F
MP:	45.53
ID:	STL4553.10X

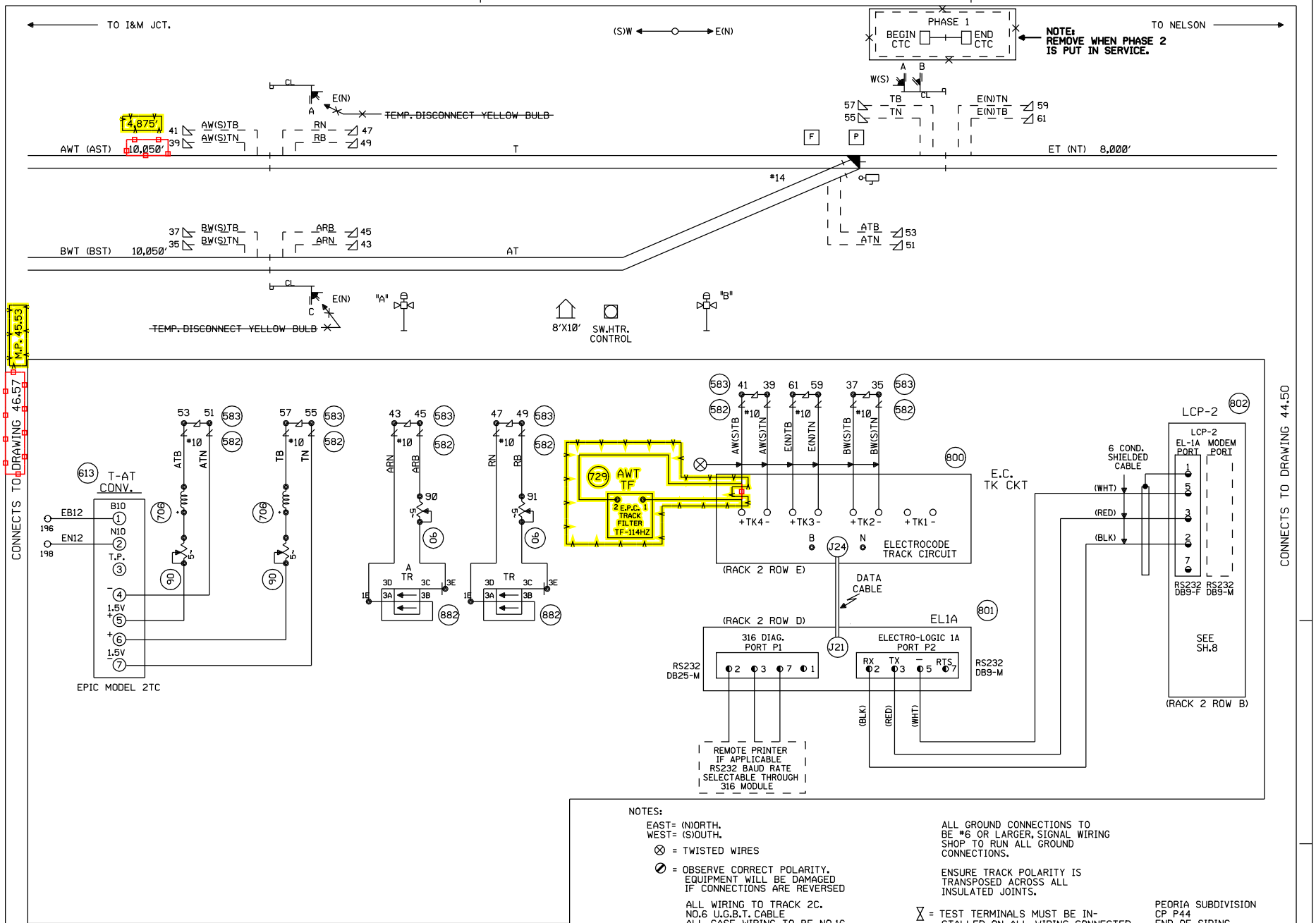

NOTES:

EAST= (N)ORTH.
WEST= (S)OUTH.

⊗ = TWISTED WIRES

⊘ = OBSERVE CORRECT POLARITY. EQUIPMENT WILL BE DAMAGED IF CONNECTIONS ARE REVERSED

ALL WIRING TO TRACK 2C. NO.6 U.G.B.T. CABLE ALL CASE WIRING TO BE NO.16 UNLESS OTHERWISE SPECIFIED.

FOR CABLE TABULATION SEE SH. 3

ALL GROUND CONNECTIONS TO BE #6 OR LARGER, SIGNAL WIRING SHOP TO RUN ALL GROUND CONNECTIONS.

ENSURE TRACK POLARITY IS TRANSPOSED ACROSS ALL INSULATED JOINTS.

⧖ = TEST TERMINALS MUST BE INSTALLED ON ALL WIRING CONNECTED TO EXTERNAL CABLES (EXCEPT TRACK AND A.C. POWER WIRES).

PEORIA SUBDIVISION
CP P44
END OF SIDING
SIGNALS E&W (N&S)
M.P. 44.52
8'X10' HOUSE

= IN
= OUT
= IN
= OUT
NEW SHEET

Designed: 11/03/11
INSTALL FLASHERS, GATES AND CWT AT 100N, M.P. 45.53.
Rec#: WO#: 11990
IS: /JTB /NST/JTB

2	2/08/08	INSTALL ELECTROCODE FROM M.P. 20.00 TO M.P. 43.00 PHASE 2 A.F.E. 83394 DLD/RCB /SSS/RCB
1	7/20/07	INSTALL ELECTROCODE FROM M.P. 43.00 TO M.P. 61.00 PHASE 1 A.F.E. 83395 DLD/RCB /SSS/RCB

MODIFICATION LEVEL	
Q. A. LAST LEVEL CHECKED	DE
LAST LEVEL MOD THIS TYPICAL	DO
LAST LEVEL BY DESIGNER	DP
CHANGED FROM TYPICAL?	Y

REV 06/22/06 ELOREEOS.1

UNION PACIFIC
QUALITY PRODUCTIVITY SAFETY
SIGNAL DESIGN

DES:	SSS
DIG:	SSS
CHK:	DLD
A.F.E.	83395
ID:	STL4452.1S

UNION PACIFIC RAILROAD

NELSON, ILLINOIS
TO I&M JCT., ILLINOIS
C.T.C. CIRCUITS

Office of AVP Engineering - Design Omaha, Nebraska

DATE 7/20/07
SHEET 1
DWG 44.52
STL

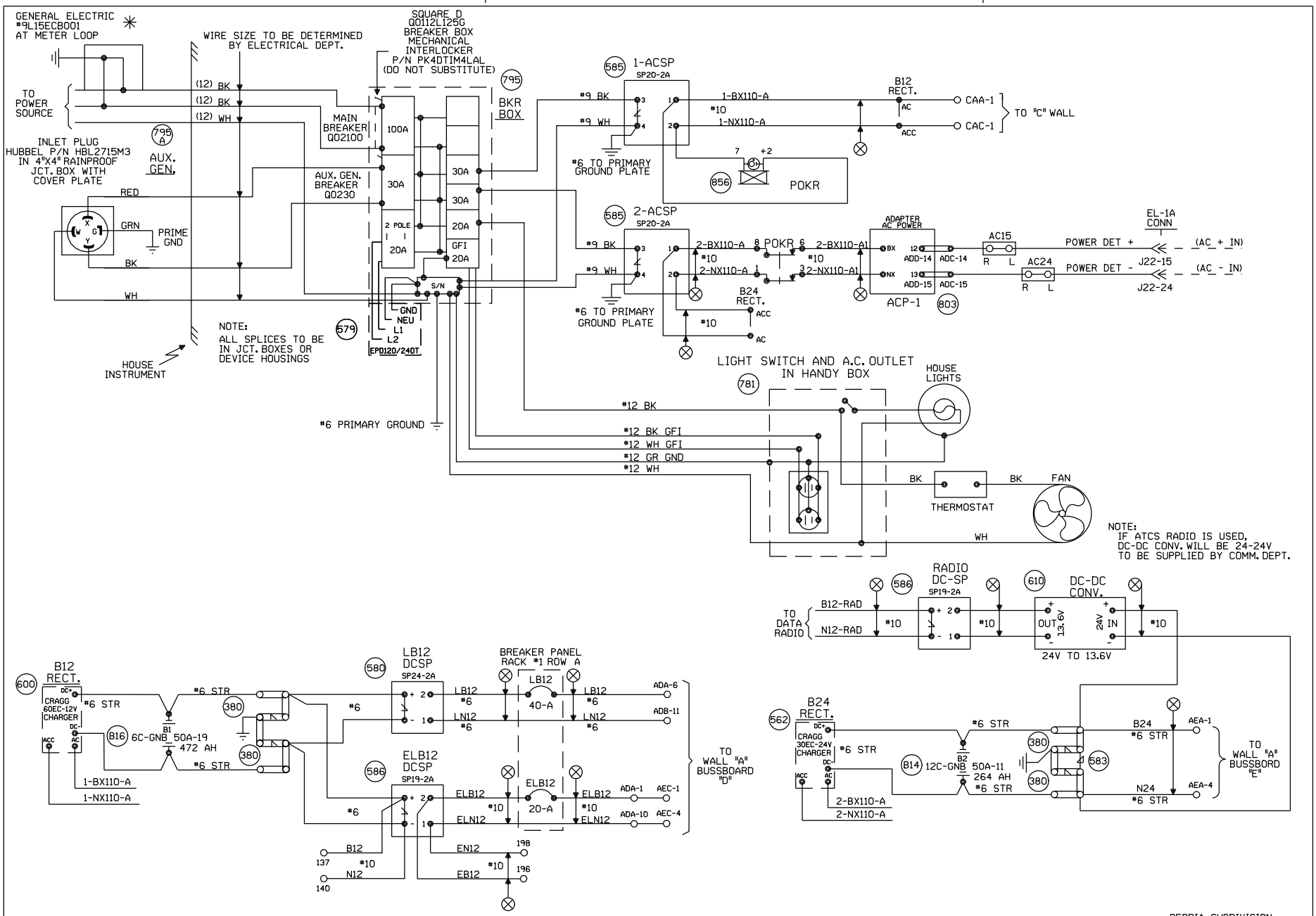
GENERAL ELECTRIC
#9L15ECB001
AT METER LOOP
WIRE SIZE TO BE DETERMINED
BY ELECTRICAL DEPT.
SQUARE D
Q0112L125G
BREAKER BOX
MECHANICAL
INTERLOCKER
P/N PK4DTIM4LAL
(DO NOT SUBSTITUTE)
795
BKR
BOX
TO
POWER
SOURCE
(12) BK
(12) BK
(12) WH
MAIN
BREAKER
Q02100
100A
30A
AUX. GEN.
BREAKER
Q0230
30A
30A
20A
GFI
20A
2 POLE
20A
795
A
AUX.
GEN.
INLET PLUG
HUBBEL P/N HBL2715M3
IN 4"X4" RAINPROOF
JCT. BOX WITH
COVER PLATE
RED
GRN
PRIME
GND
BK
WH
S/N
GND
NEU
L1
L2
EPD120/240T
579
NOTE:
ALL SPLICES TO BE
IN JCT. BOXES OR
DEVICE HOUSINGS
HOUSE
INSTRUMENT
#6 PRIMARY GROUND
585
1-ACSP
SP20-2A
#9 BK
#9 WH
1-BX110-A
#10
1-NX110-A
B12
RECT.
AC
ACC
CAA-1
CAC-1
TO "C" WALL
#6 TO PRIMARY
GROUND PLATE
856
POKR
585
2-ACSP
SP20-2A
#9 BK
#9 WH
2-BX110-A
#10
2-NX110-A
POKR
2-BX110-A1
2-NX110-A1
ADAPTER
AC POWER
BX
NX
ADD-14
ADD-15
ADC-14
ADC-15
ACP-1
803
AC15
AC24
R
L
POWER DET +
POWER DET -
EL-1A
CONN
J22-15
J22-24
(AC + IN)
(AC - IN)
B24
RECT.
ACC
AC
#6 TO PRIMARY
GROUND PLATE
LIGHT SWITCH AND A.C. OUTLET
IN HANDY BOX
781
HOUSE
LIGHTS
#12 BK
#12 BK GFI
#12 WH GFI
#12 GR GND
#12 WH
BK
THERMOSTAT
FAN
WH
NOTE:
IF ATCS RADIO IS USED,
DC-DC CONV. WILL BE 24-24V
TO BE SUPPLIED BY COMM. DEPT.
586
RADIO
DC-SP
SP19-2A
610
DC-DC
CONV.
TO
DATA
RADIO
B12-RAD
N12-RAD
#10
OUT
13.6V
24V
IN
24V TO 13.6V
600
B12
RECT.
CRAGG
60EC-12V
CHARGER
#6 STR
B16
6C-GNB 50A-19
472 AH
B1
380
1-BX110-A
1-NX110-A
580
LB12
DCSP
SP24-2A
BREAKER PANEL
RACK #1 ROW A
LB12
40-A
LB12
LN12
#6
ADA-6
ADB-11
586
ELB12
DCSP
SP19-2A
ELB12
20-A
ELB12
ELN12
#10
ADA-1
ADA-10
AEC-1
AEC-4
TO
WALL "A"
BUSSBOARD
"D"
B12
N12
137
140
EN12
EB12
198
196
562
B24
RECT.
CRAGG
30EC-24V
CHARGER
B14
12C-GNB 50A-11
264 AH
B2
2-BX110-A
2-NX110-A
583
B24
N24
AEA-1
AEA-4
TO
WALL "A"
BUSSBORD
"E"
= IN
= OUT
PEORIA SUBDIVISION
CP P44
END OF SIDING
SIGNALS E&W (N&S)
M.P. 44.52
8'X10' HOUSE
NEW SHEET
Designed: 11/03/11
INSTALL FLASHERS,
GATES AND CWT AT
100N. M.P. 45.53.
Rec'd:
IS:
WO#: 11990
/JTB
/NST/JTB
1
7/20/07
INSTALL ELECTROCODE
FROM M.P. 43.00
TO M.P. 61.00
PHASE 1
A.F.E. 83395
DLD/RCB
/SSS/RCB
MODIFICATION LEVEL
O. A. LAST LEVEL CHECKED DE
LAST LEVEL MOD THIS TYPICAL DO
LAST LEVEL BY DESIGNER DP
CHANGED FROM TYPICAL? Y
REV 06/22/06 ELOREEOS.2
UNION PACIFIC
QUALITY
PRODUCTIVITY
SAFETY
SIGNAL DESIGN
DES: SSS
DIG: SSS
CHK: DLD
A.F.E. 83395
ID= STL4452.2S
UNION PACIFIC RAILROAD
NELSON, ILLINOIS
TO I&M JCT., ILLINOIS
C.T.C. CIRCUITS
Office of AVP Engineering - Design
Omaha, Nebraska
DATE 7/20/07
SHEET 2
DWG 44.52
STL

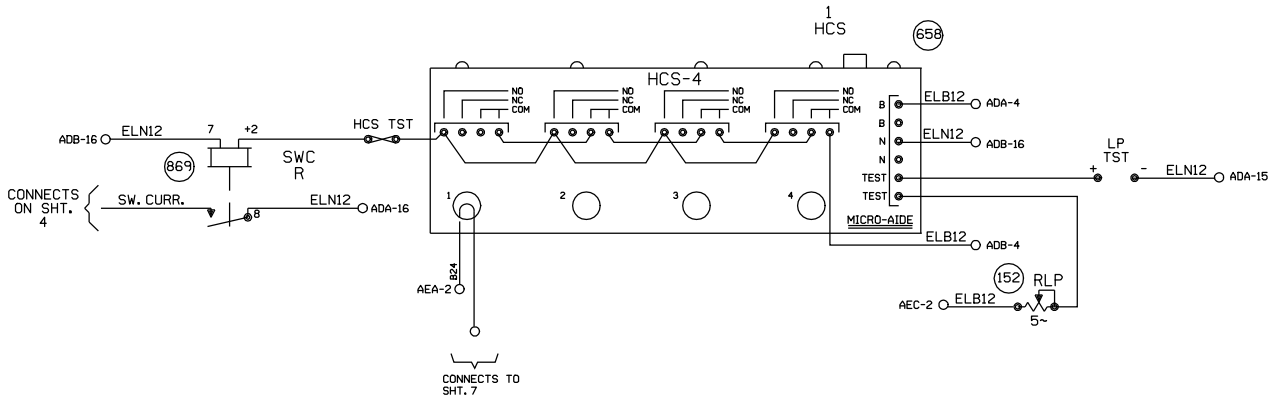

= IN
= OUT

PEORIA SUBDIVISION
CP P44
END OF SIDING
SIGNALS E&W (N&S)
M.P. 44.52
8'X10' HOUSE

NEW SHEET

Designed: 11/03/11
INSTALL FLASHERS, GATES AND CWT AT 100N, M.P. 45.53.
Rec#: WO#: 11990
IS: /JTB
/NST/JTB

1 7/20/07
INSTALL ELECTROCODE FROM M.P. 43.00 TO M.P. 61.00
PHASE 1
A.F.E. 83395 DLD/RCB
/ /SSS/RCB

MODIFICATION LEVEL	
Q. A. LAST LEVEL CHECKED	DE
LAST LEVEL MOD THIS TYPICAL	DO
LAST LEVEL BY DESIGNER	DP
CHANGED FROM TYPICAL?	N

REV 06/22/06 ELDREEDS. 2A

UNION PACIFIC
QUALITY PRODUCTIVITY SAFETY
SIGNAL DESIGN

DES:	SSS
DIG:	SSS
CHK:	DLD
A.F.E.	83395
ID= STL4452.2AS	

UNION PACIFIC RAILROAD
NELSON, ILLINOIS
TO I&M JCT., ILLINOIS
C.T.C. CIRCUITS
Office of AVP Engineering - Design Omaha, Nebraska

DATE 7/20/07
SHEET 2A
DWG 44.52
STL