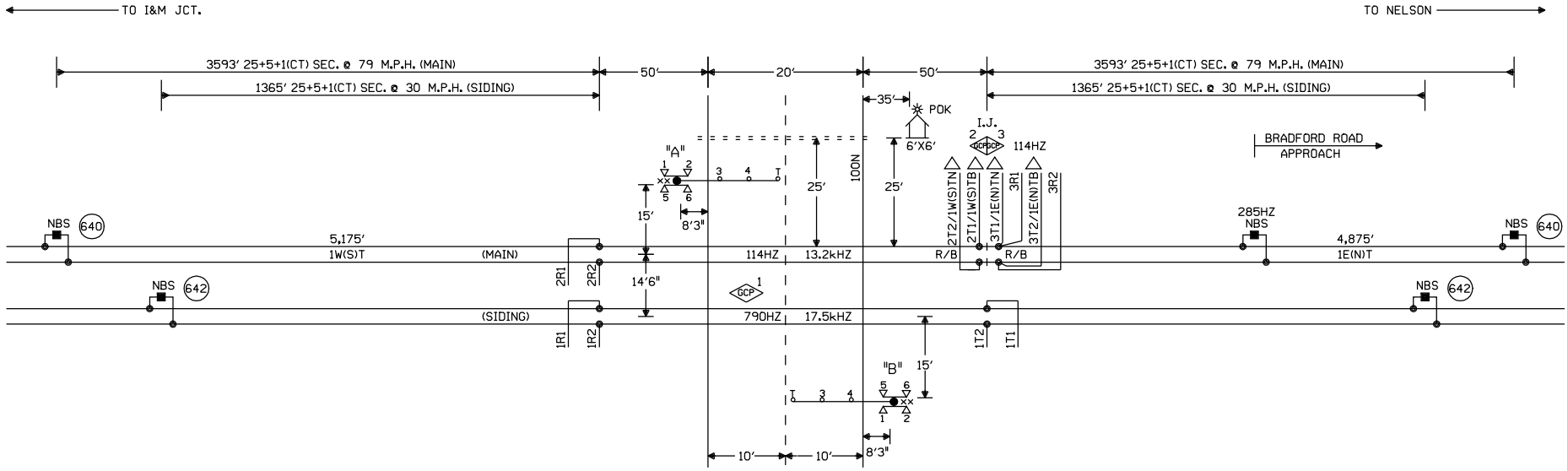

CONNECTS TO M.P. 46.57

CONNECTS TO M.P. 44.52

NOTES:

⊗ = TWISTED WIRES
INSULATED 1 TWIST PER FT.
ALL TRACK WIRES 2C. #6

TRANSMITTER AND RECEIVER LEADS TO BE SEPARATED BY AT LEAST 12" IN TRENCH, LENGTHS SHOULD NOT EXCEED MANUFACTURES RECOMMENDATION.

TOP OF FOUNDATION TO BE AT SAME ELEVATION AS THE SURFACE OF THE TRAVELED WAY & NO MORE THAN 4" ABOVE THE SURFACE OF THE GROUND.

ALL BUNGALOW WIRING TO BE #16 AWG FLEX UNLESS OTHERWISE SPECIFIED EXCEPT ALL GROUND WIRE TO BE #6 AWG FLEX OR LARGER.

ALL WIRING IN GATE MECHANISM TO BE #10 "AWG FLEX".

REFER TO UP STANDARD DWG FOR BUNGALOW GROUNDING.

PORTABLE GENERATOR EXTENSION CORD FOR 240V TO 240V IS PROVIDED AS WELL AS A 120V TO 240V ADAPTER.

ALL LIGHTS TO BE 12" ROUNDELS.

= = = = = = 4" X 40' CONDUIT

LIGHTS: LED LIGHTS

GATE A: 18'
GATE B: 18'

xx = BELL

△ = ENSURE TRACK POLARITY IS TRANSPOSED ACROSS ALL INSULATED JOINTS.

CONSTRUCTION NOTES:

1. INSTALL TRACK FILTERS (TAB 729) TO THE ELECTROCODE UNITS @ THE FOLLOWING LOCATIONS:
   (1) 114 HZ - M.P. 44.52
   (2) 114 HZ - M.P. 45.53
   (1) 114 HZ - M.P. 46.57
2. ELECTROCODE 5 REPEATER IS TO BE PROVIDED UNDER W.O. 83395.
3. GATE PLACEMENT IS BASED ON A 20' ROAD.
4. MAINTAIN A MINIMUM 120' ISLAND.

W(S) ←—○—→ E(N)

NEW SHEET

Designed: 11/03/11
INSTALL FLASHERS, GATES AND CWT AT 100N, M.P. 45.53.
Rec#: IS:
WO#: 11990 /JTB /NST/JTB

MODIFICATION LEVEL	
Q. A. LAST LEVEL CHECKED	DU
LAST LEVEL MOD THIS TYPICAL	DU
LAST LEVEL BY DESIGNER	DU
CHANGED FROM TYPICAL?	Y

REV 01.24.11 4K 2TKUGTYP.1

UNION PACIFIC
QUALITY PRODUCTIVITY SAFETY
SIGNAL DESIGN

Date:	11/03/11
Des:	NST
Chk:	JPW
AFE:	11990

UNION PACIFIC RAILROAD
CAMPGROVE, ILLINOIS
100N
PEORIA SUBDIVISION
Office of Sr AVP Engineering - Signal/TCO Omaha, Nebraska

Sh.:	1
DOT	175678F
MP:	45.53
ID:	STL4553.1X

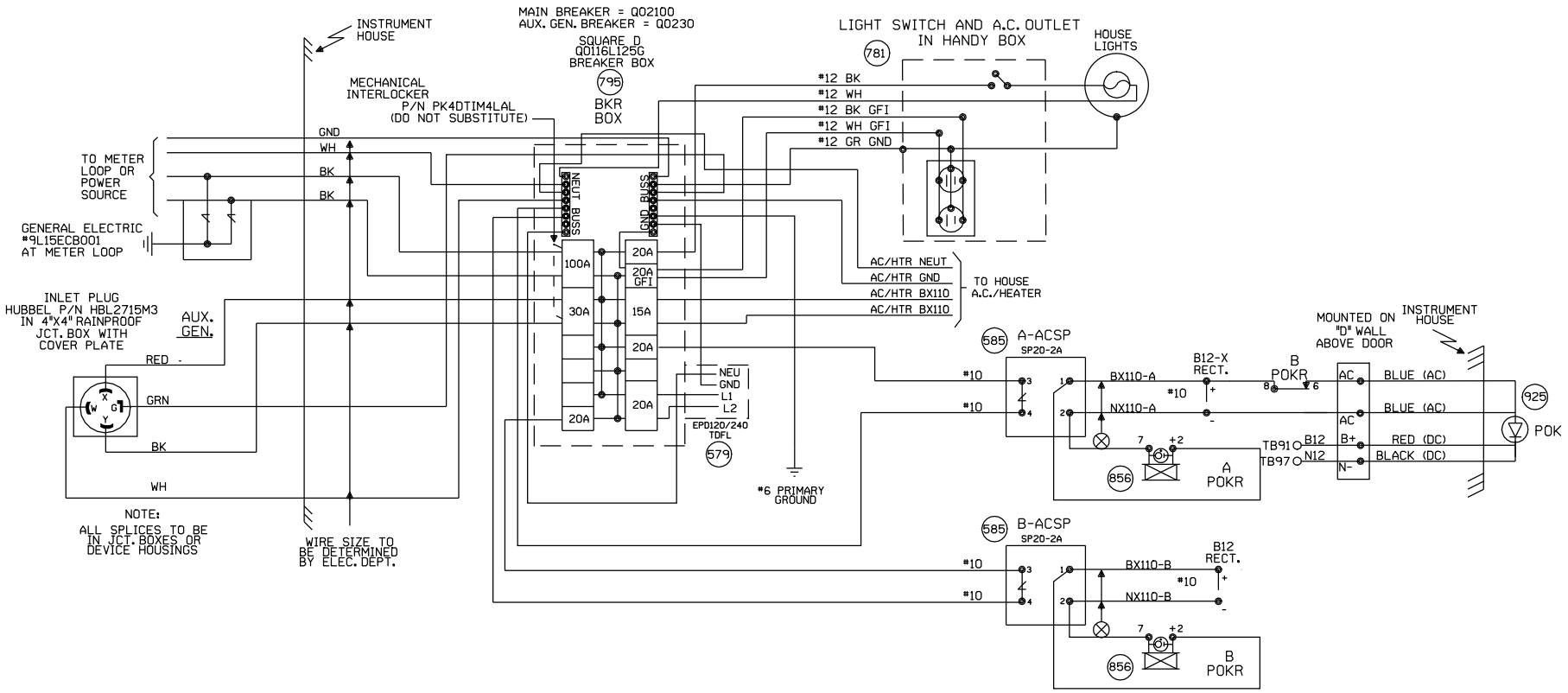

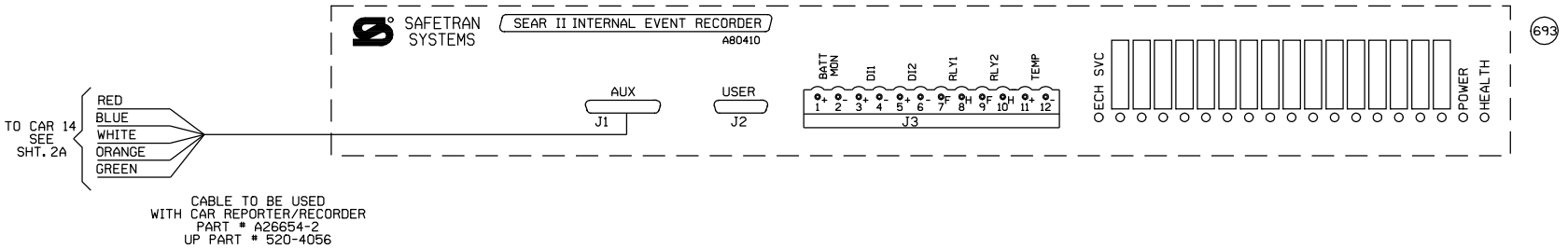

CABLE TO BE USED
WITH CAR REPORTER/RECORDER
PART # A26654-2
UP PART # 520-4056

NEW SHEET

Designed: 11/03/11

INSTALL FLASHERS, GATES AND CWT AT 100N, M.P. 45.53.

Rec'd: WO#: 11990 JTB
IS: / /NST/JTB

MODIFICATION LEVEL	
Q. A. LAST LEVEL CHECKED	DU
LAST LEVEL MOD THIS TYPICAL	DU
LAST LEVEL BY DESIGNER	DU
CHANGED FROM TYPICAL?	Y

REV 01.24.11 4K SEARAC.2

UNION PACIFIC
QUALITY PRODUCTIVITY SAFETY
SIGNAL DESIGN

Date:	11/03/11
Des:	NST
Chk:	JTB
AFE:	11990

UNION PACIFIC RAILROAD

CAMPGROVE, ILLINOIS
100N
PEORIA SUBDIVISION

Office of Sr AVP Engineering - Signal/TCO Omaha, Nebraska

Sh.:	2
DOT	175678F
MP:	45.53
ID:	STL4553.2X

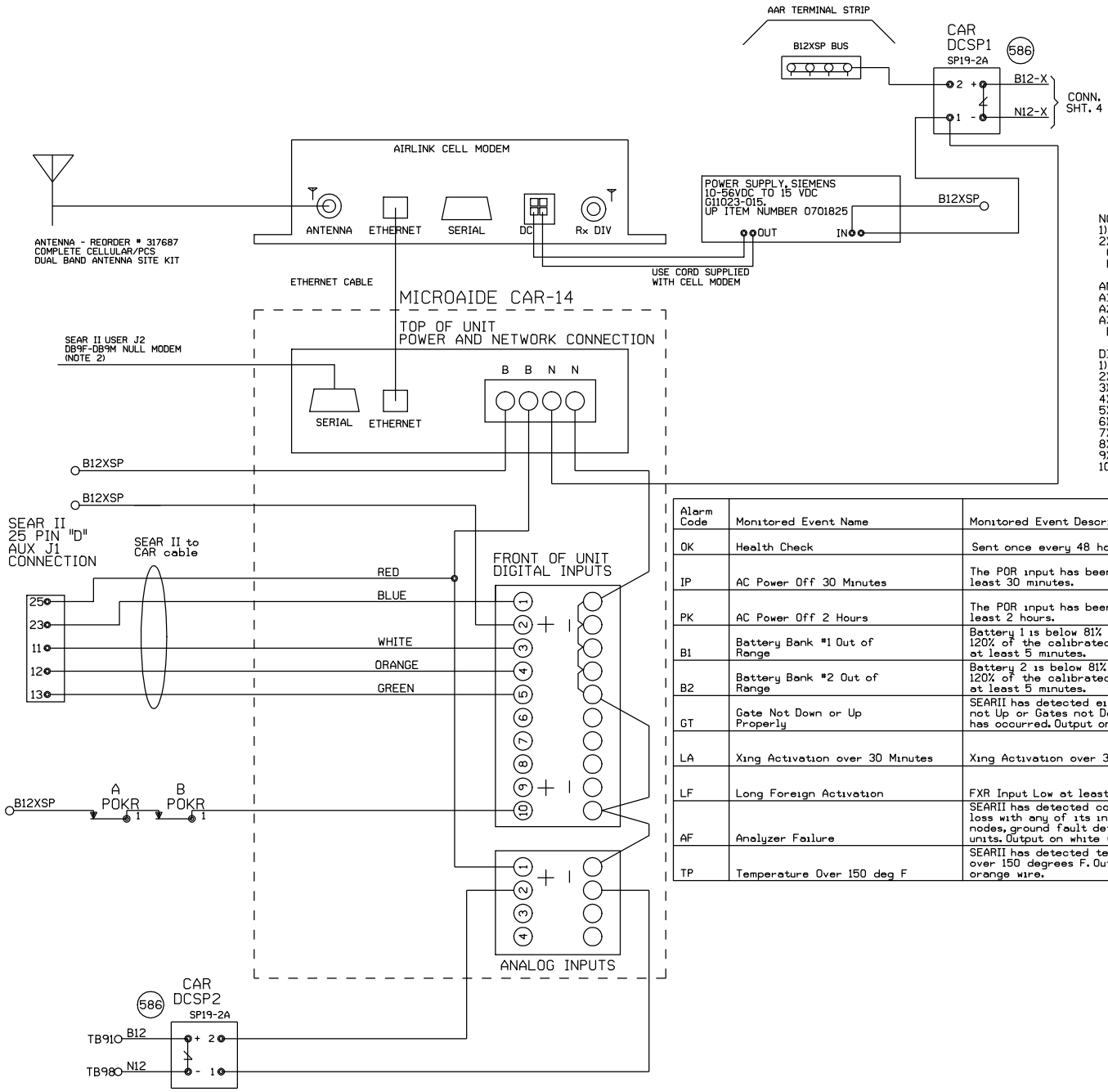

NOTE:
1) AT LOCATIONS WITH NO FOREIGN XR, JUMPER D2 TO B12XSP.
2) THE CAR14 SERIAL PORT IS AVAILABLE TO ADD REMOTE CONNECTIVITY TO THE SEARII. USE A DB9F TO DB9M NULL MODEM SERIAL CABLE.

ANALOG INPUTS:
A1) B12X BATTERY BANK, JUMPERED FROM CAR14 POWER INPUTS
A2) B12 BATTERY BANK
A3) AND A4) ARE AVAILABLE TO MONITOR ADDITIONAL BATTERY BANKS.

DIGITAL INPUTS (LOCATIONS WITH SEARII)
1) XR (BLUE WIRE)
2) FXR (FROM B12XSP THRU FRONT CONTACT)
3) ANALYZER FAILURE (WHITE WIRE)
4) HIGH TEMPERATURE (ORANGE WIRE)
5) GATES NOT UP OR DOWN PROPERLY (GREEN WIRE)
6)
7)
8)
9)
10) POWER OFF INDICATION: POR

Alarm Code	Monitored Event Name	Monitored Event Description	Alarm Cleared
OK	Health Check	Sent once every 48 hours.	
IP	AC Power Off 30 Minutes	The POR input has been down for at least 30 minutes.	The POR input comes back on for at least 5 minutes after an AC Power Off Alarm
PK	AC Power Off 2 Hours	The POR input has been down for at least 2 hours.	The POR input comes back on for at least 5 minutes after an AC Power Off Alarm
B1	Battery Bank #1 Out of Range	Battery 1 is below 81% or above 120% of the calibrated value for at least 5 minutes.	Battery 1 is within acceptable range for at least 5 minutes.
B2	Battery Bank #2 Out of Range	Battery 2 is below 81% or above 120% of the calibrated value for at least 5 minutes.	Battery 2 is within acceptable range for at least 5 minutes.
GT	Gate Not Down or Up Properly	SEARII has detected either a Gates not Up or Gates not Down alarm has occurred. Output on green wire.	The Gate Up or Gates Down indications indicated true after a Gate Not Down or Gate Not Up alarm was triggered.
LA	Xing Activation over 30 Minutes	Xing Activation over 30 Minutes	Crossing has recovered after a Long Activation Alarm had occurred.
LF	Long Foreign Activation	FXR Input Low at least 30 Minutes	FXR Input for 10 Sec.
AF	Analyzer Failure	SEARII has detected communication loss with any of its installed echelon nodes, ground fault detectors, or TSS units. Output on white wire.	Analyzer has recovered after an analyzer failure.
TP	Temperature Over 150 deg F	SEARII has detected temperature over 150 degrees F. Output on orange wire.	Temperature sensor inside SEAR detects temperature is OK after a Hi-Temp alarm.

NEW SHEET

Designed: 11/03/11
INSTALL FLASHERS, GATES AND CWT AT 100N, M.P. 45.53.
Req#: WO#: 11990
IS: /JTB
/NST/JTB
REV 01.24.11 4K ACDCCAR14SII.3

MODIFICATION LEVEL	
Q. A. LAST LEVEL CHECKED	DU
LAST LEVEL MOD THIS TYPICAL	DU
LAST LEVEL BY DESIGNER	DU
CHANGED FROM TYPICAL?	Y

UNION PACIFIC
QUALITY PRODUCTIVITY SAFETY
SIGNAL DESIGN

Date: 11/03/11
Des: NST
Chk: JTB
AFE: 11990

UNION PACIFIC RAILROAD
CAMPGROVE, ILLINOIS
100N
PEORIA SUBDIVISION
Office of Sr AVP Engineering - Signal/TCO Omaha, Nebraska

Sh.: 2A
DOT 175678F
MP: 45.53
ID: STL4553.2AX

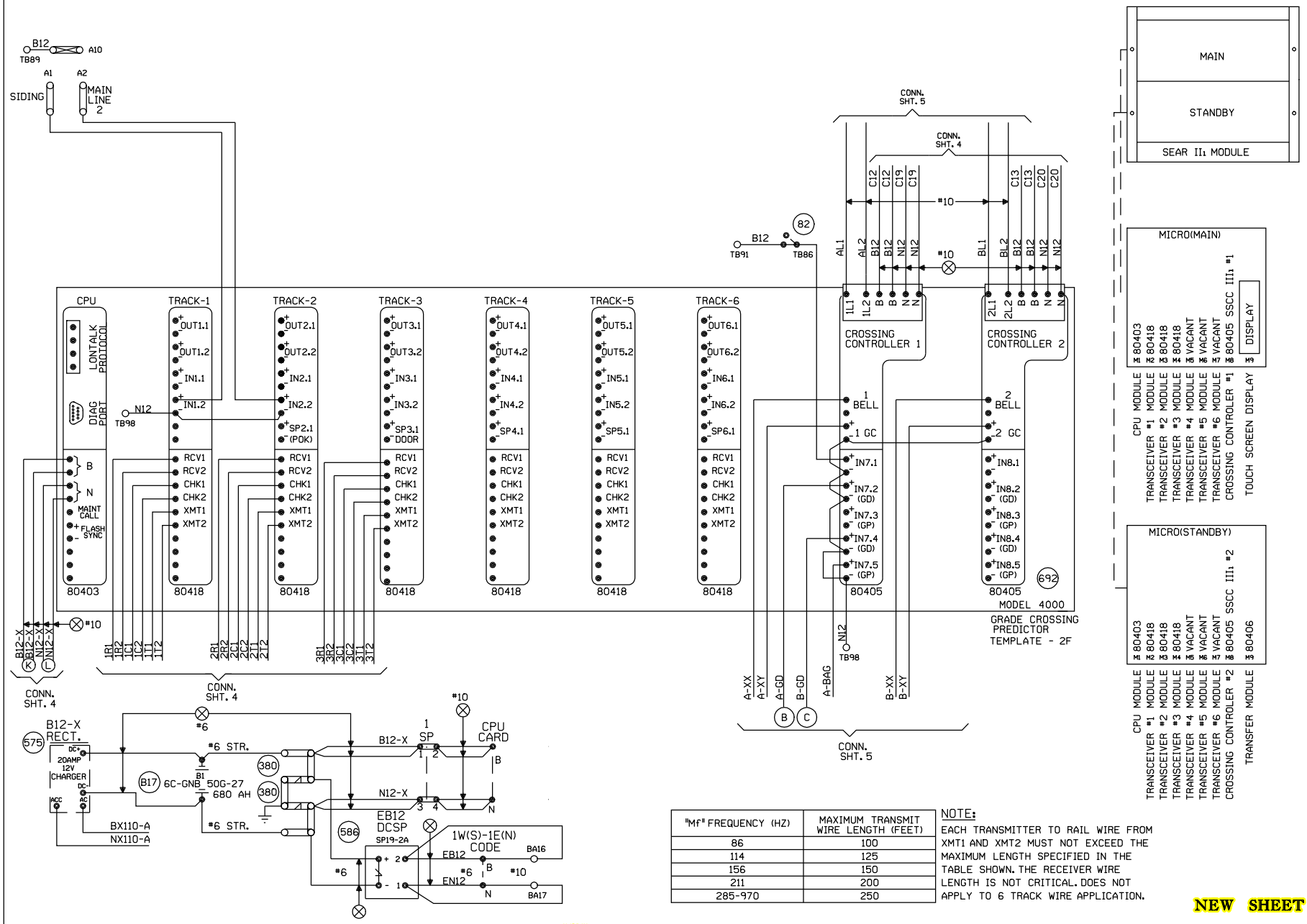

"Mf" FREQUENCY (HZ)	MAXIMUM TRANSMIT WIRE LENGTH (FEET)
86	100
114	125
156	150
211	200
285-970	250

NOTE:
EACH TRANSMITTER TO RAIL WIRE FROM XMT1 AND XMT2 MUST NOT EXCEED THE MAXIMUM LENGTH SPECIFIED IN THE TABLE SHOWN. THE RECEIVER WIRE LENGTH IS NOT CRITICAL. DOES NOT APPLY TO 6 TRACK WIRE APPLICATION.

NEW SHEET

Designed: 11/03/11
INSTALL FLASHERS, GATES AND CWT AT 100N, M.P. 45.53.
Rec#: WO#: 11990
IS: /JTB /NST/JTB

MODIFICATION LEVEL	
Q. A. LAST LEVEL CHECKED	DU
LAST LEVEL MOD THIS TYPICAL	DU
LAST LEVEL BY DESIGNER	DU
CHANGED FROM TYPICAL?	Y

REV 01.24.11 4K 4TKB4GF.3

UNION PACIFIC
QUALITY PRODUCTIVITY SAFETY
SIGNAL DESIGN

Date: 11/03/11
Des: NST
Chk: JTB
AFE: 11990

UNION PACIFIC RAILROAD

CAMPGROVE, ILLINOIS
100N
PEORIA SUBDIVISION
Office of Sr AVP Engineering - Signal/TCO Omaha, Nebraska

Sh.: 3
DOT 175678F
MP: 45.53
ID: STL4553.3X

Minimum Program Steps Report

Location and SIN

DOT Number: 175678F
Milepost Number: 45.53
Site Name: CAMPGROVE, IL

SIN: 762010010016 *

* Parameter is part of office check number calculation.

MCF and Template Selection

MCF Name: GCP-T6X-02-4.mcf
MCF Revision: 24
MCFCRC: 09FC363B

Template = 2F:2 Bi,2 Uni, 2 Rem (OCCN) *

* Parameter is part of office check number calculation.

Minimum Program Steps

TEMPLATE: module configuration
Track 4/PSO 3 Slot = Not Used (OCCN) *

TEMPLATE: track 1-Bi, Island
Track 1 : GCP Frequency = 790 Hz (Field,TCN)
Track 1 : Approach Distance = 1365 ft (Set in Field,TCN)
Track 1 : Prime Warning Time = 26 sec (OCCN) *
Track 1 : GCP Transmit Level = Medium (Set in Field,TCN)
Track 1 : Isl Frequency = 17.5 kHz (Set in Field)

TEMPLATE: track 2-Uni, Island
Track 2 : GCP Frequency = 114 Hz (Field,TCN)
Track 2 : Approach Distance = 3593 ft (Set in Field,TCN)
Track 2 : Prime Warning Time = 26 sec (OCCN) *
Track 2 : GCP Transmit Level = Medium (Set in Field,TCN)
Track 2 : Isl Frequency = 13.2 kHz (Set in Field)
Track 2 : Island Distance = 120 ft (Set in Field,TCN)

TEMPLATE: track 3-Uni,No Island
Track 3 : GCP Frequency = 114 Hz (Field,TCN)
Track 3 : Approach Distance = 3593 ft (Set in Field,TCN)
Track 3 : Prime Warning Time = 26 sec (OCCN) *
Track 3 : GCP Transmit Level = Medium (Set in Field,TCN)

TEMPLATE: AND 1 XR
AND 1 Enable Used = Yes (OCCN) *

TEMPLATE: SSCC
SSCC 1 : Lamp Neutral Test = Off (Set in Field)
SSCC 2 : Lamp Neutral Test = Off (Set in Field)

TEMPLATE: OOS
OOS Control = OOS IPs (OCCN) *
T3 OOS Control = OOS Input 2 (OCCN) *

TEMPLATE: IP assignment 1
IN 1.2 = Out Of Service IP 1 (OCCN) *
IN 2.2 = Out Of Service IP 2 (OCCN) *

TEMPLATE: IP assignment SSCC
IN 7.1 = AND 1 XR Enable (OCCN) *

GCP: track 1
Track 1 : Island Distance = 120 ft (Set in Field,TCN)

ADVANCED: site options
Daylight Savings = On (Set in Field)

* Parameter is part of office check number calculation.

Check Numbers

Office Check Number: 358C5956
Config. Check Number: 0FDF7E7D
(Based on MCF Revision 24)

Parameters not part of office check number calculation:

Track 1 : GCP Frequency = 790 Hz
Track 1 : Approach Distance = 1365 ft (Set in Field)
Track 1 : GCP Transmit Level = Medium (Set in Field)
Track 1 : Isl Frequency = 17.5 kHz
Track 2 : GCP Frequency = 114 Hz
Track 2 : Approach Distance = 3593 ft (Set in Field)
Track 2 : GCP Transmit Level = Medium (Set in Field)
Track 2 : Isl Frequency = 13.2 kHz
Track 2 : Island Distance = 120 ft (Set in Field)
Track 3 : GCP Frequency = 114 Hz
Track 3 : Approach Distance = 3593 ft (Set in Field)
Track 3 : GCP Transmit Level = Medium (Set in Field)
SSCC 1 : Lamp Neutral Test = Off (Set in Field)
SSCC 2 : Lamp Neutral Test = Off (Set in Field)
Track 1 : Island Distance = 120 ft (Set in Field)
Daylight Savings = On (Set in Field)

Comments

<none>

Configuration Package File

Filename: STL4553_175678F.pac
Path: H:\UP\XINGS\PROJECTS\21-310-0 (100N)\PAC Files\
Date/Time: 2/13/2012 11:08:10

NEW SHEET

							Designed: 11/03/11 INSTALL FLASHERS, GATES AND CWT AT 100N, M.P. 45.53. Rec#: WO#: 11990 IS: /JTB /NST/JTB	UNION PACIFIC QUALITY PRODUCTIVITY SAFETY SIGNAL DESIGN	Date: 11/03/11 Des: NST Chk: JTB AFE: 11990	UNION PACIFIC RAILROAD CAMPGROVE, ILLINOIS 100N PEORIA SUBDIVISION Office of Sr AVP Engineering - Signal/TCO Omaha, Nebraska	Sh.: 3A DOT 175678F MP: 45.53 ID: STL4553.3AX