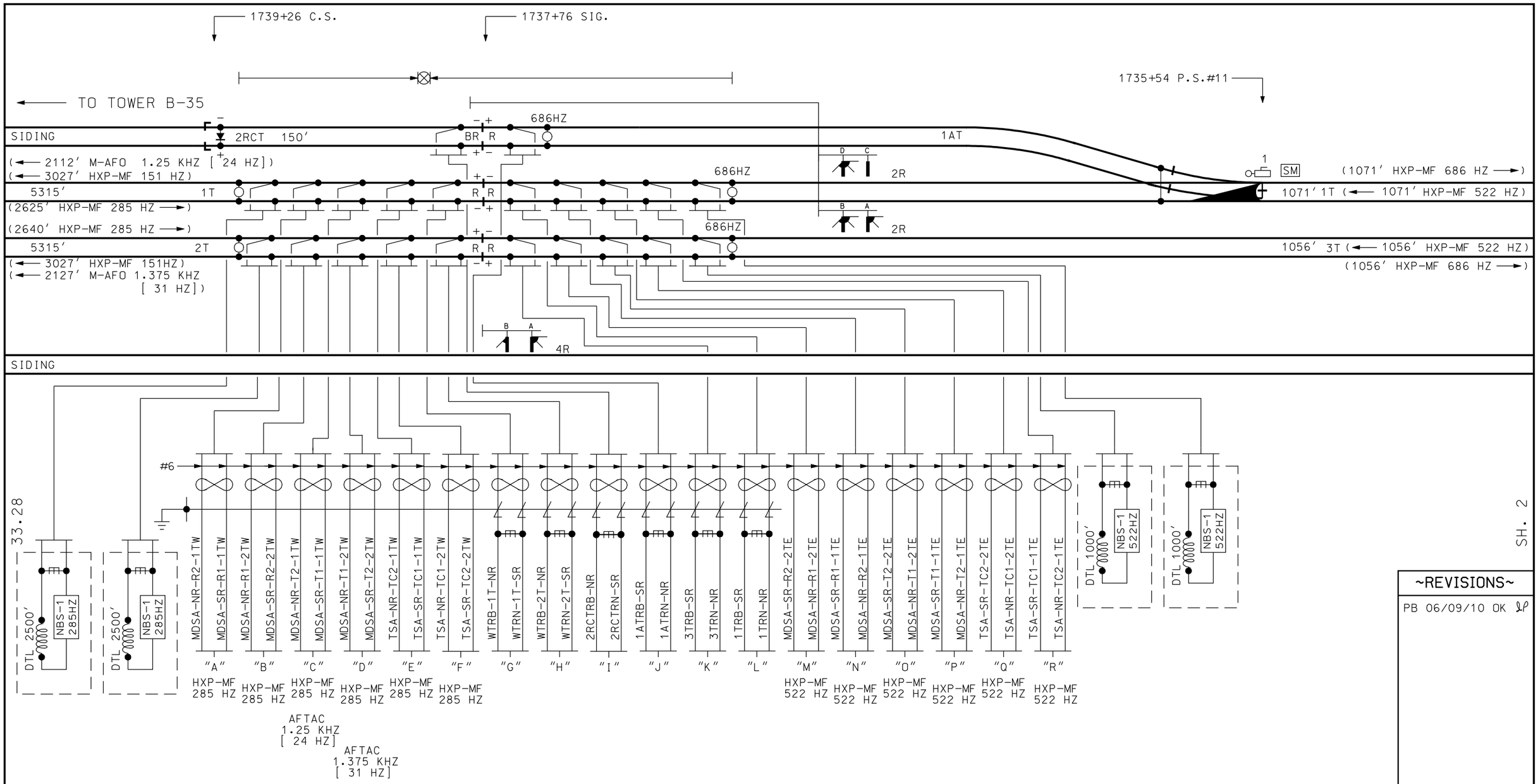

SH. 2

NOTES:

PRIME GROUND

INDICATES LEADS TWISTED IN PAIRS

022585-1X HEAVY DUTY SAFETRAN CLEARVIEW LIGHTNING ARRESTERS

022700-1X HEAVY DUTY SAFETRAN EQUALIZER

INDICATES LEADS TO BE WELDED ON RAIL AS CLOSE TOGETHER AS POSSIBLE.

NARROW BAND SHUNT

(← 3027' HXP-MF 151 HZ)

- FREQUENCY
- LENGTH OF CIRCUIT
- DIRECTION TO TRANSMITTER

~REVISIONS~

PB 06/09/10 OK

Metra SIGNAL ENGINEERING CHICAGO, ILLINOIS

CHICAGO TO ELGIN
SPAULDING INTERLOCKING
PLAN VIEW

REFERENCE: 32.78 SH.1 THRU SH.73			DATE: 08/28/08
DESIGNED	DRAWN	CHECKED	APPROVED
PB	PB		
DISTRICT	PRINT NUMBER		
MW/W	32.78 SH.1		

17-FEB-2012 09:48

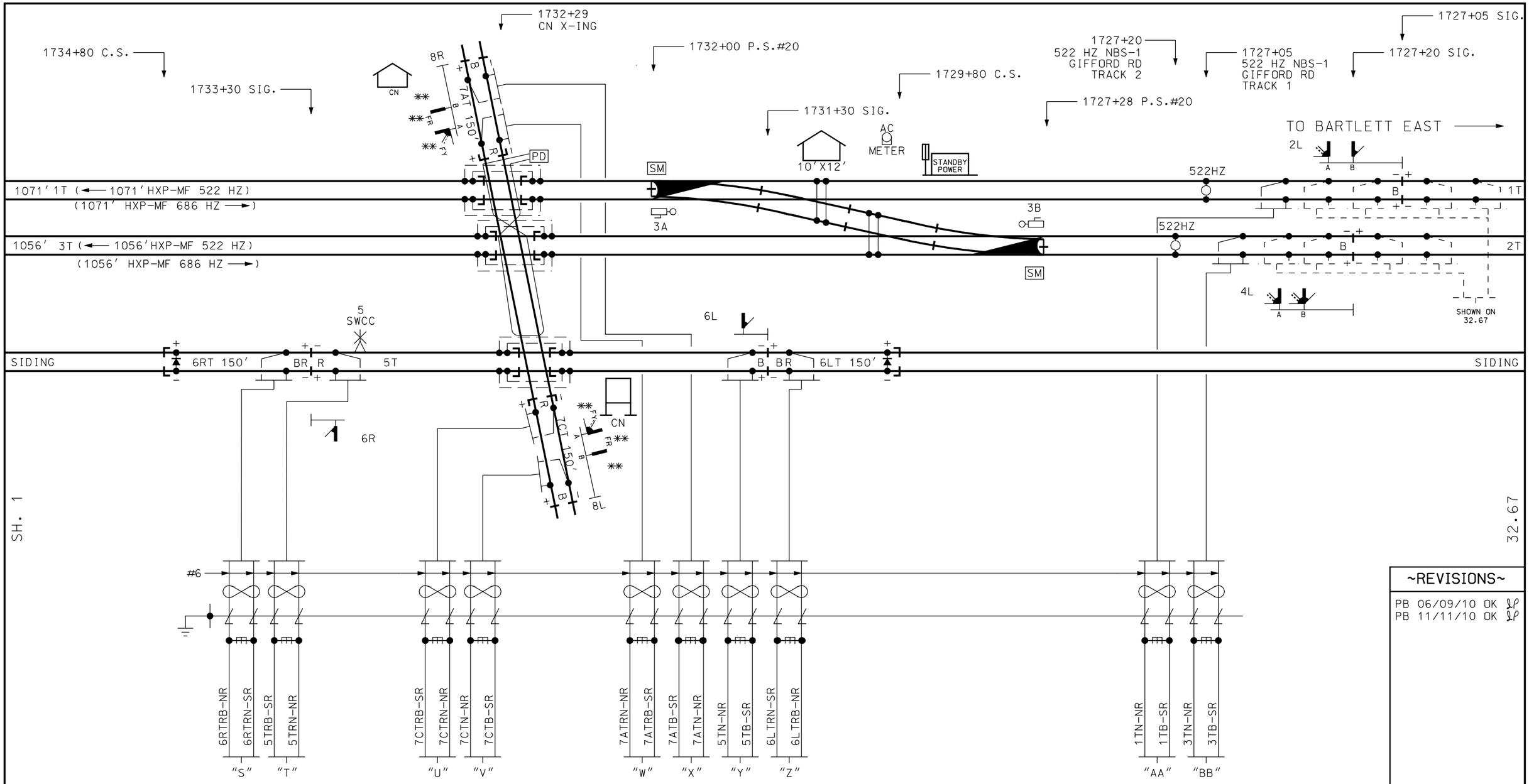

NOTES:

PRIME GROUND

INDICATES LEADS TWISTED IN PAIRS

NARROW BAND SHUNT

(← 464 ' HXP-MF 522 HZ)

FREQUENCY

LENGTH OF CIRCUIT

DIRECTION TO TRANSMITTER

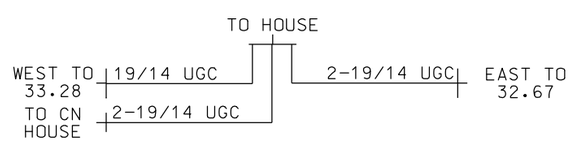

** = DRAFTING CHANGE TO REFLECT FIELD CONDITIONS

~REVISIONS~

PB 06/09/10 OK
PB 11/11/10 OK

Metra

SIGNAL ENGINEERING
CHICAGO, ILLINOIS

CHICAGO TO ELGIN
SPAULDING INTERLOCKING
PLAN VIEW

REFERENCE:			DATE:
32.78 SH.1 THRU SH.73			08/28/08
DESIGNED	DRAWN	CHECKED	APPROVED
PB	PB		
DISTRICT	PRINT NUMBER		
MW/W	32.78 SH.2		

17-FEB-2012 09:48

TK.1 = TK. 1TW
TK.2 = TK. 1TE

ADJUST SEL
APPROACH LENGTH:
TK.1 - 2625'
TK.2 - 1071'

WARNING TIME:
TK.1 - 31 SEC.
TK.2 - 29 SEC.

MD RESTART:
TK.1 - 0
TK.2 - 0

OPTIONS
1. TK-ENA:
TK.1 - UP
TK.2 - UP

2. TK FO
TK.1 - STRAP
TK.2 - STRAP

3. CW/MD
TK.1 - C
TK.2 - C

4. UNI-BI
TK.1 - b
TK.2 - b

6. CWEWT
TK.1 - 80
TK.2 - 80

7. LOS
TK.1 - 16
TK.2 - 16

8. IJ-LOS
TK.1 - 5
TK.2 - 5

11. AX 1
TK-ASN - 1T
OF-TK - 1071'
WT - 31
MD-RST -
CW/MD - C
CJ-LOS - 0
PJ-DET - 15
POS-ST - dn

12. AX 2
TK-ASN - 2T
OF-TK - 3027'
WT - 31
MD-RST -
CW/MD - C
CJ-LOS - 0
PJ-DET - 15
POS-ST - dn

13. AX 3
TK-ASN -
OF-TK -
WT -
MD-RST -
CW/MD -
CJ-LOS -
PJ-DET -
POS-ST -

17. MDR-AX - n

18. MD-TMR
TK.1 - 10
TK.2 - 10

19. MIN-WT - 0

20. FS-DET - 0

48. PF-ENA - UP

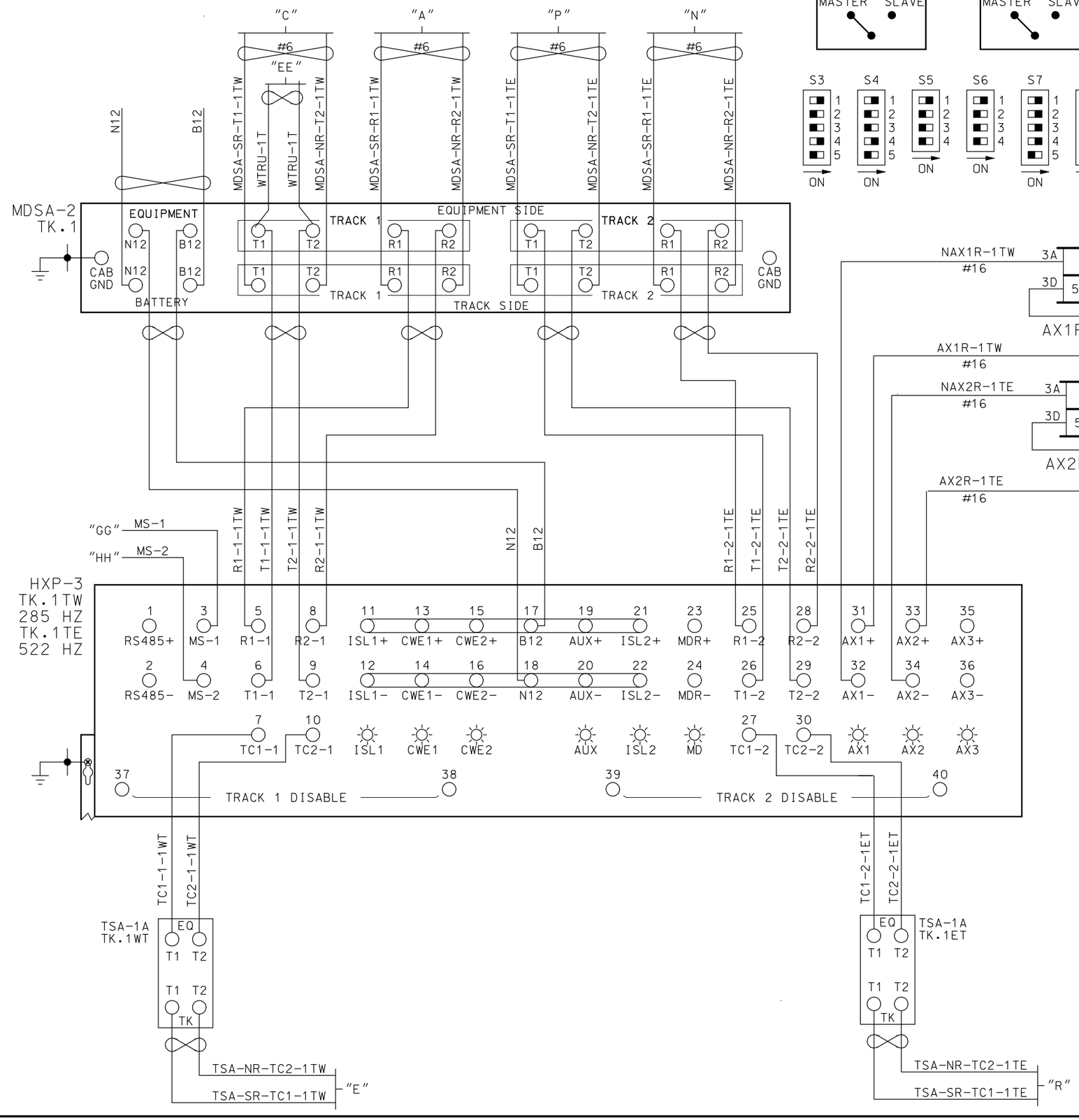

HXP-3 MODULE SETUP

RMM MODULE	
SIM MODULE	
	TRM MODULE
	EMPTY SLOT
	RYD MODULE
	TRM MODULE
	EMPTY SLOT
	CPU MODULE
	AXD MODULE

~REVISIONS~

PB 06/09/10 OK

ALL WIRING ON THIS SHEET
#10 AWG UNLESS NOTED

Metra
SIGNAL ENGINEERING
CHICAGO, ILLINOIS

CHICAGO TO ELGIN
SPAULDING INTERLOCKING
HXP-3 TRACK 1

REFERENCE:			DATE:
32.78 SH.1 THR SH.73			08/28/08
DESIGNED	DRAWN	CHECKED	APPROVED
PB	PB		
DISTRICT	PRINT NUMBER		
MW/W	32.78 SH.14		

17-FEB-2012 09:48

TK.1 = TK. 2TW
TK.2 = TK. 2TE

ADJUST SEL
- APPROACH LENGTH:
  - TK.1 - 2640'
  - TK.2 - 1056'
- WARNING TIME:
  - TK.1 - 31 SEC.
  - TK.2 - 29 SEC.
- MD RESTART:
  - TK.1 - 0
  - TK.2 - 0

OPTIONS
1. TK-ENA:
   - TK.1 - UP
   - TK.2 - UP
2. TK FO
   - TK.1 - STRAP
   - TK.2 - STRAP
3. CW/MD
   - TK.1 - C
   - TK.2 - C
4. UNI-BI
   - TK.1 - b
   - TK.2 - b
6. CWEWT
   - TK.1 - 80
   - TK.2 - 80
7. LOS
   - TK.1 - 16
   - TK.2 - 16
8. IJ-LOS
   - TK.1 - 5
   - TK.2 - 5
11. AX 1
    - TK-ASN - 1T
    - OF-TK - 1056'
    - WT - 31
    - MD-RST -
    - CW/MD - C
    - CJ-LOS - 0
    - PJ-DET - 15
    - POS-ST - dn
12. AX 2
    - TK-ASN - 2T
    - OF-TK - 3027'
    - WT - 31
    - MD-RST -
    - CW/MD - C
    - CJ-LOS - 0
    - PJ-DET - 15
    - POS-ST - dn
13. AX 3
    - TK-ASN -
    - OF-TK -
    - WT -
    - MD-RST -
    - CW/MD -
    - CJ-LOS -
    - PJ-DET -
    - POS-ST -
17. MDR-AX - n
18. MD-TMR
    - TK.1 - 10
    - TK.2 - 10
19. MIN-WT - 0
20. FS-DET - 0
48. PF-ENA - UP

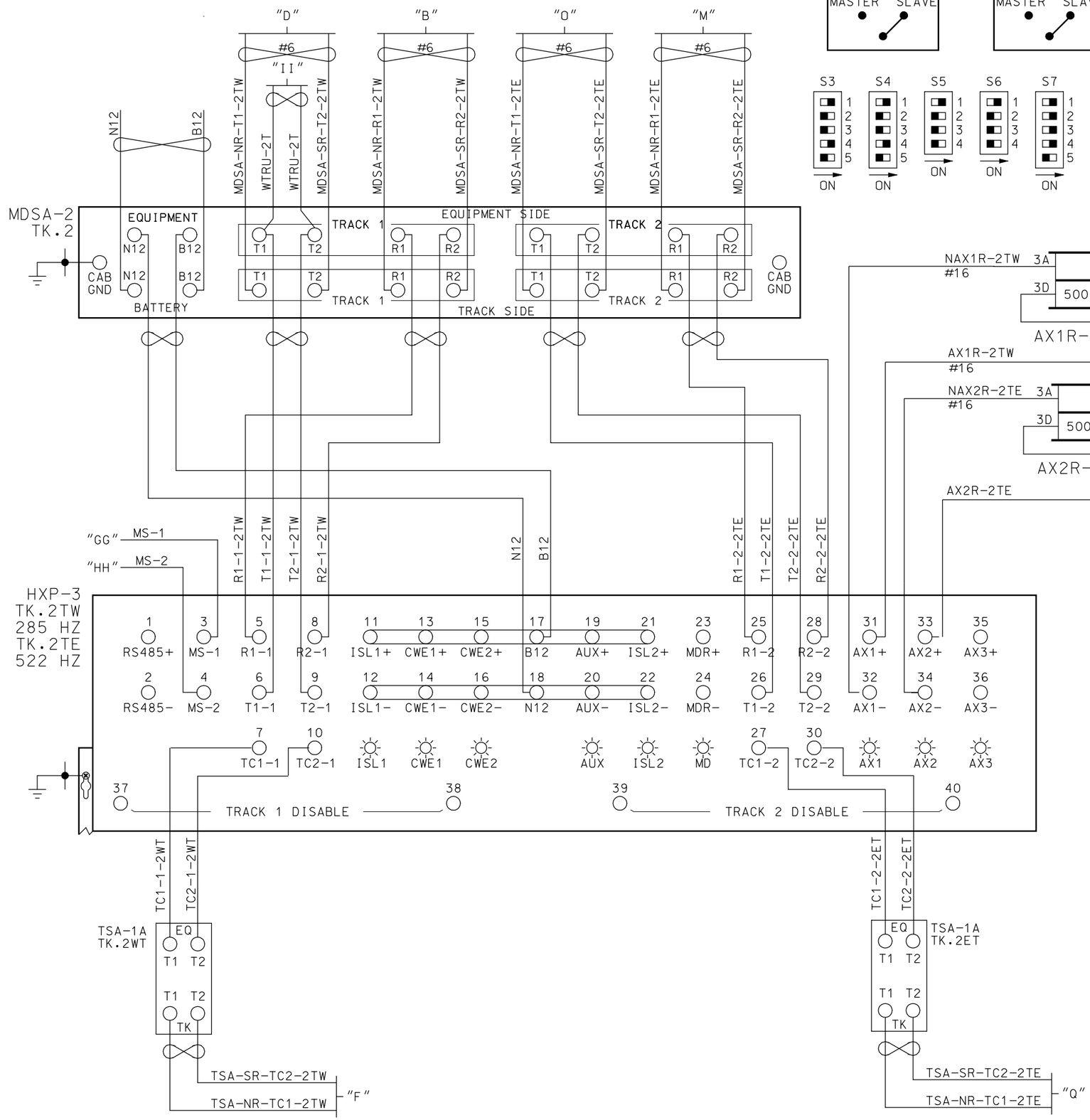

HXP-3 MODULE SETUP

RMM MODULE	
SIM MODULE	
	TRM MODULE
	EMPTY SLOT
	RYD MODULE
	TRM MODULE
	EMPTY SLOT
	CPU MODULE
	AXD MODULE

~REVISIONS~

PB 06/09/10 OK

ALL WIRING ON THIS SHEET
#10 AWG UNLESS NOTED

Metra SIGNAL ENGINEERING
CHICAGO, ILLINOIS

CHICAGO TO ELGIN
SPAULDING INTERLOCKING
HXP-3 TRACK 2

REFERENCE:			DATE:
32.78 SH.1 THRU SH.73			08/28/08
DESIGNED	DRAWN	CHECKED	APPROVED
PB	PB		
DISTRICT	PRINT NUMBER		
MW/W	32.78 SH.15		

17-FEB-2012 09:48

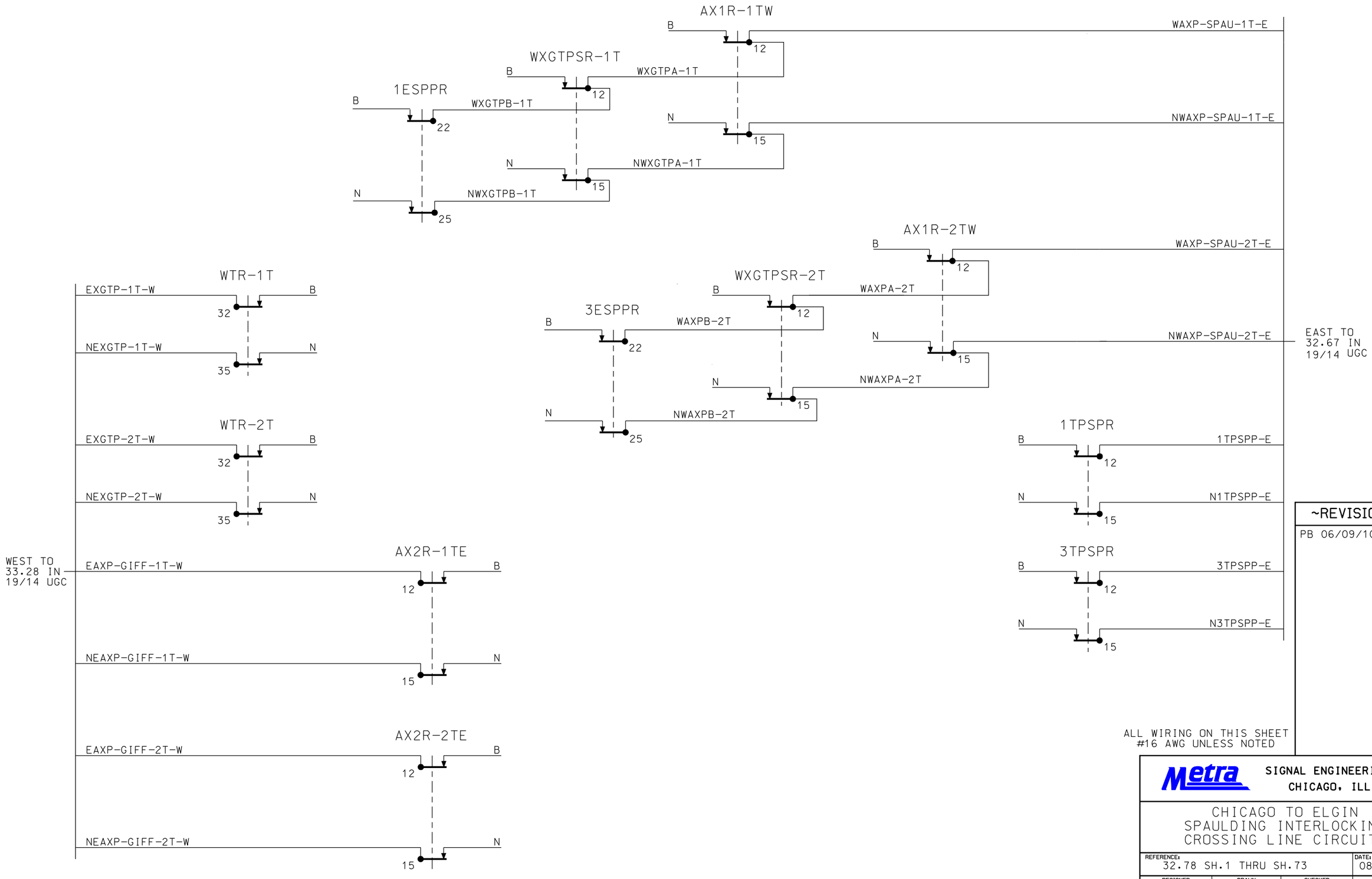

ALL WIRING ON THIS SHEET
#16 AWG UNLESS NOTED

~REVISIONS~

PB 06/09/10 OK

Metra SIGNAL ENGINEERING
CHICAGO, ILLINOIS

CHICAGO TO ELGIN
SPAULDING INTERLOCKING
CROSSING LINE CIRCUITS

REFERENCE: 32.78 SH.1 THRU SH.73			DATE: 08/28/08
DESIGNED	DRAWN	CHECKED	APPROVED
PB	PB		
DISTRICT	PRINT NUMBER		
MW/W	32.78 SH.16		

17-FEB-2012 09:48

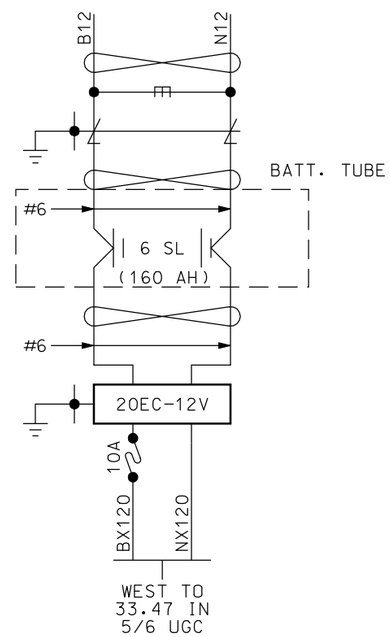

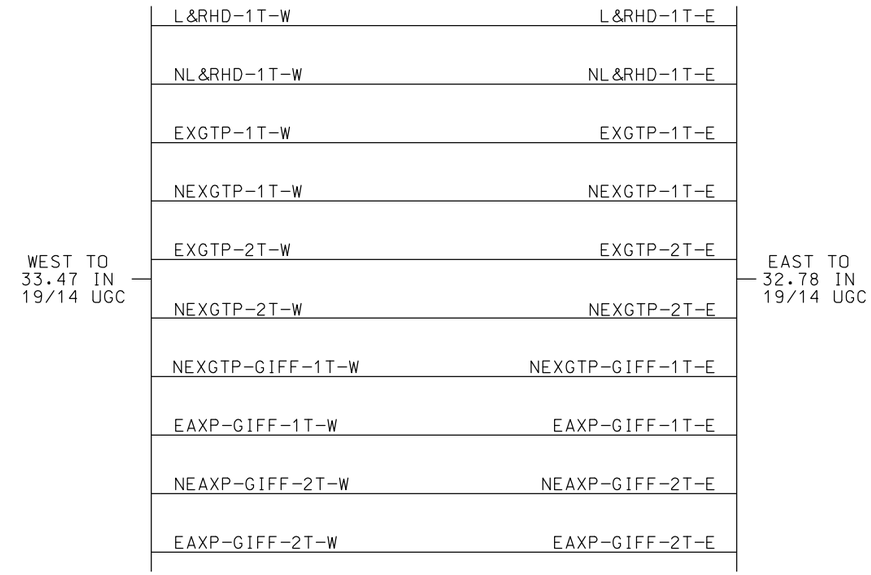

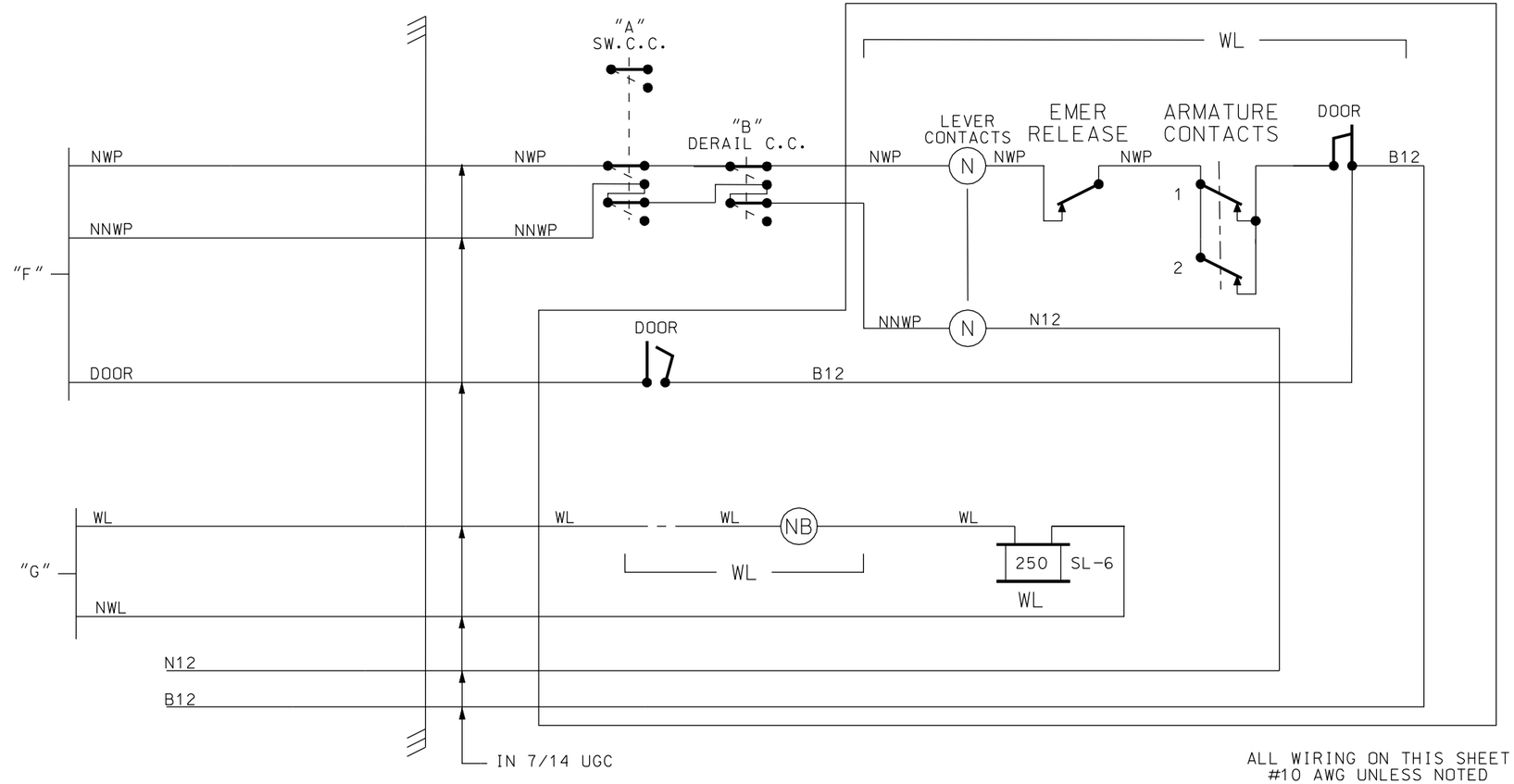

ALL WIRING ON THIS SHEET
#10 AWG UNLESS NOTED

~REVISIONS~

Metra SIGNAL ENGINEERING
CHICAGO, ILLINOIS

CHICAGO TO ELGIN
ELECTRIC LOCK
SWITCH AND POWER CIRCUITS

REFERENCE:			DATE:
33.28 SH.1 THRU SH.4			11/11/10
DESIGNED	DRAWN	CHECKED	APPROVED
PB	PB		
DISTRICT	PRINT NUMBER		
MW/W	33.28 SH.4		

17-FEB-2012 09:49

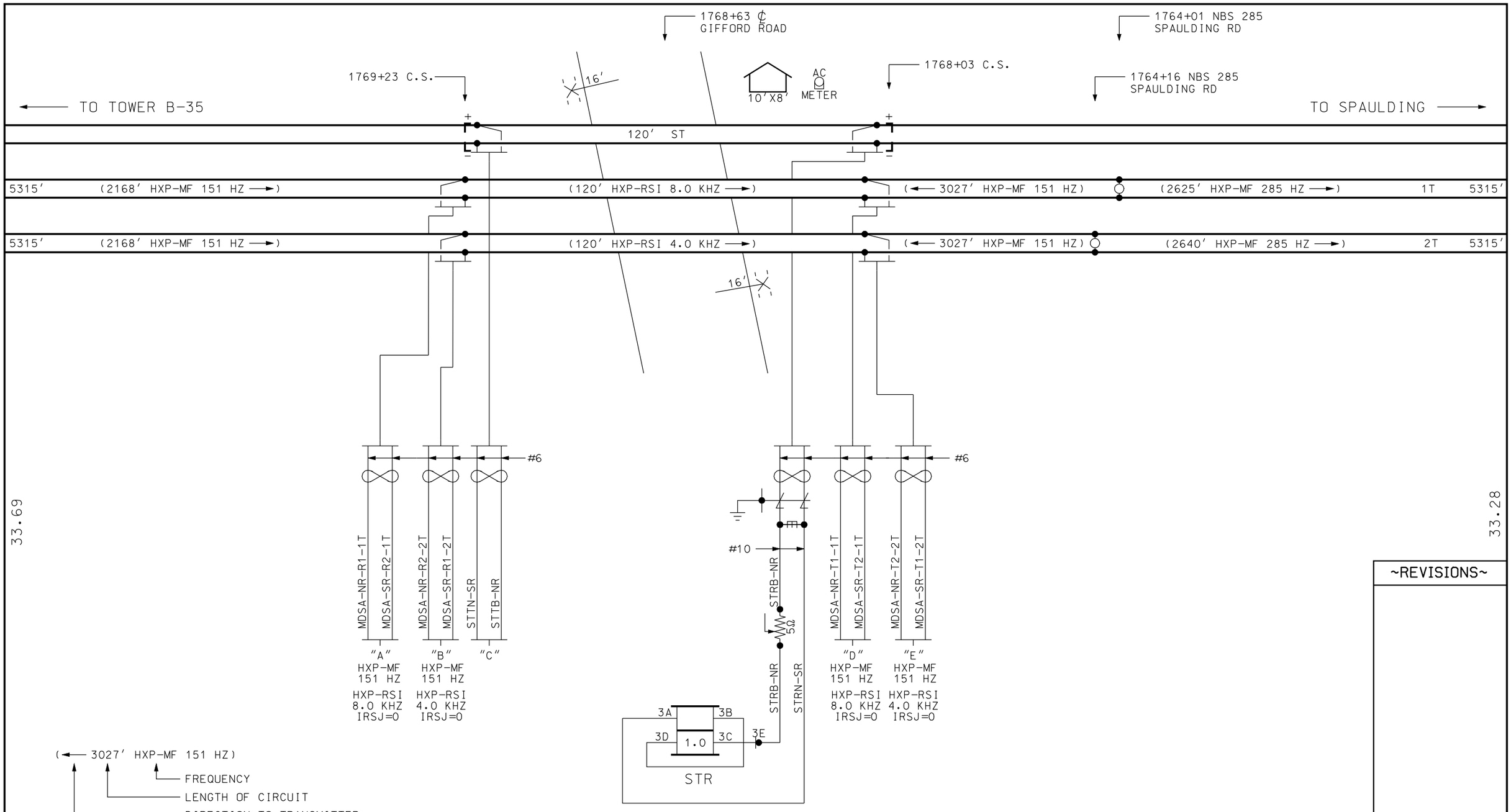

(← 3027' HXP-MF 151 HZ)

- FREQUENCY
- LENGTH OF CIRCUIT
- DIRECTION TO TRANSMITTER

INDICATES AUTOMATIC GATE PER FHWA MUTCD WITH PEDESTRIAN BELL ON BOTH SIGNAL.

INDICATES NARROW BAND SHUNT

PRIME GROUND

EW & WW APPROACH - 1T & 2T AT 70 MPH		
MIN. WARNING TIME	=	20 SEC
WIDE XING TIME	=	4 SEC
REACTION TIME	=	5 SEC
RESPONSE TIME	=	5 SEC
APPROACH LENGTH	=	3491 FT.

ALL WIRING ON THIS SHEET
#10 AWG UNLESS NOTED

~REVISIONS~

Metra SIGNAL ENGINEERING
CHICAGO, ILLINOIS

CHICAGO TO ELGIN
GIFFORD ROAD, ELGIN
PLAN VIEW

REFERENCE:			DATE:
33.47 SH. 1 THRU SH. 11			11/11/10
DESIGNED	DRAWN	CHECKED	APPROVED
PB	PB		
DISTRICT	PRINT NUMBER		
MW/W	33.47 SH.1		

17-FEB-2012 09:49

TK.1 = TK. 1
TK.2 = DISABLED

ADJUST SEL
APPROACH LENGTH:
TK.1 - 3027'
TK.2 -

WARNING TIME:
TK.1 - 29 SEC.
TK.2 - SEC.

MD RESTART:
TK.1 - 0
TK.2 - 0

OPTIONS
1. TK-ENA:
TK.1 - UP
TK.2 -

2. TK FO
TK.1 - STRAP
TK.2 -

3. CW/MD
TK.1 - C
TK.2 -

4. UNI-BI
TK.1 - b
TK.2 -

6. CWEWT
TK.1 - 80
TK.2 -

7. LOS
TK.1 - 16
TK.2 -

8. IJ-LOS
TK.1 - 5
TK.2 -

11. AX 1
TK-ASN -
OF-TK -
WT -
MD-RST -
CW/MD -
CJ-LOS -
PJ-DET -
POS-ST -

12. AX 2
TK-ASN -
OF-TK -
WT -
MD-RST -
CW/MD -
CJ-LOS -
PJ-DET -
POS-ST -

13. AX 3
TK-ASN -
OF-TK -
WT -
MD-RST -
CW/MD -
CJ-LOS -
PJ-DET -
POS-ST -

17. MDR-AX - n

18. MD-TMR
TK.1 - 10
TK.2 -

19. MIN-WT - 0

20. FS-DET - 0

48. PF-ENA - UP

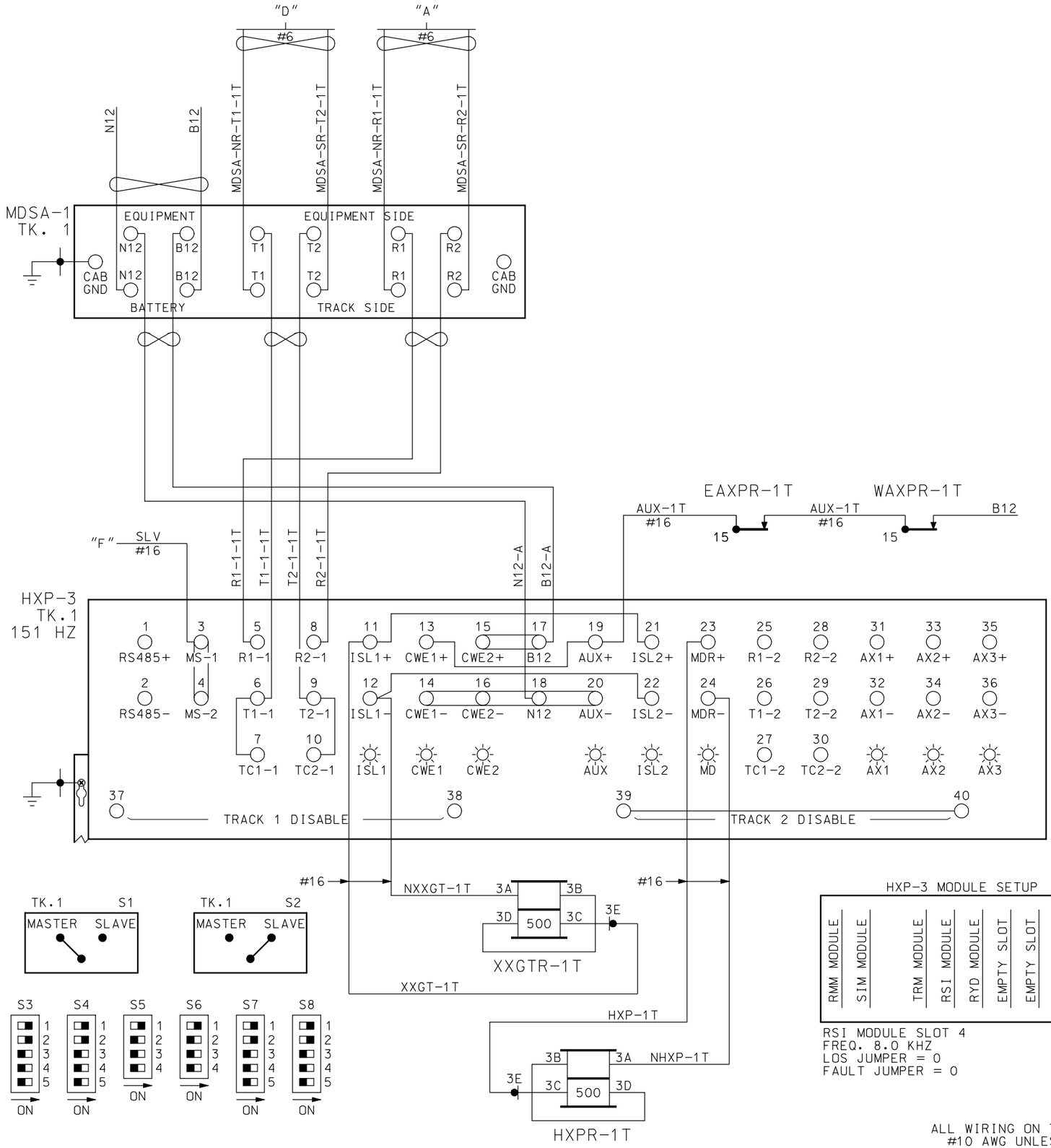

HXP-3 MODULE SETUP

RMM MODULE	SIM MODULE		TRM MODULE	RSI MODULE	RYD MODULE	EMPTY SLOT	EMPTY SLOT	CPU MODULE	EMPTY SLOT

RSI MODULE SLOT 4
FREQ. 8.0 KHZ
LOS JUMPER = 0
FAULT JUMPER = 0

ALL WIRING ON THIS SHEET
#10 AWG UNLESS NOTED

~REVISIONS~

Metra SIGNAL ENGINEERING
CHICAGO, ILLINOIS

CHICAGO TO ELGIN
GIFFORD ROAD, ELGIN
HXP-3 - TK.1

REFERENCE:			DATE:
33.47 SH. 1 THRU SH. 11			11/11/10
DESIGNED	DRAWN	CHECKED	APPROVED
PB	PB		
DISTRICT	PRINT NUMBER		
MW/W	33.47 SH. 2		

17-FEB-2012 09:49

TK.1 = TK. 2
TK.2 = DISABLE

ADJUST SEL
- APPROACH LENGTH:
  - TK.1 - 3027'
  - TK.2 -
- WARNING TIME:
  - TK.1 - 29 SEC.
  - TK.2 - SEC.
- MD RESTART:
  - TK.1 - 0
  - TK.2 -

OPTIONS
1. TK-ENA:
   - TK.1 - UP
   - TK.2 -
2. TK FO
   - TK.1 - STRAP
   - TK.2 -
3. CW/MD
   - TK.1 - C
   - TK.2 -
4. UNI-BI
   - TK.1 - b
   - TK.2 -
6. CWEWT
   - TK.1 - 80
   - TK.2 -
7. LOS
   - TK.1 - 16
   - TK.2 -
8. IJ-LOS
   - TK.1 - 5
   - TK.2 -
11. AX 1
   - TK-ASN -
   - OF-TK -
   - WT -
   - MD-RST -
   - CW/MD -
   - CJ-LOS -
   - PJ-DET -
   - POS-ST -
12. AX 2
   - TK-ASN -
   - OF-TK -
   - WT -
   - MD-RST -
   - CW/MD -
   - CJ-LOS -
   - PJ-DET -
   - POS-ST -
13. AX 3
   - TK-ASN -
   - OF-TK -
   - WT -
   - MD-RST -
   - CW/MD -
   - CJ-LOS -
   - PJ-DET -
   - POS-ST -
17. MDR-AX - n
18. MD-TMR
   - TK.1 - 10
   - TK.2 -
19. MIN-WT - 0
20. FS-DET - 0
48. PF-ENA - UP

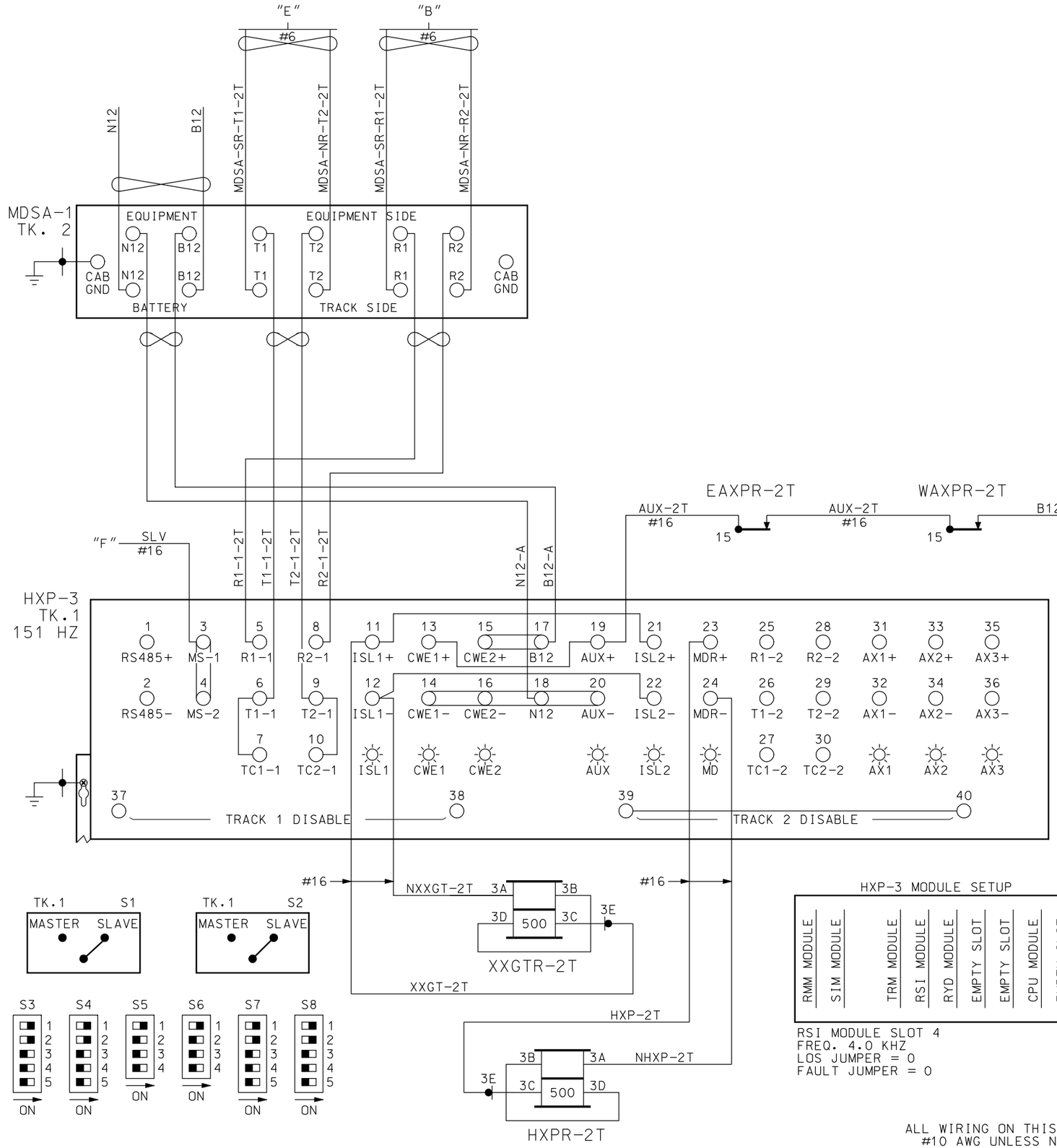

HXP-3 MODULE SETUP

RMM MODULE	SIM MODULE	TRM MODULE	RSI MODULE	RYD MODULE	EMPTY SLOT	EMPTY SLOT	CPU MODULE	EMPTY SLOT

RSI MODULE SLOT 4
FREQ. 4.0 KHZ
LOS JUMPER = 0
FAULT JUMPER = 0

ALL WIRING ON THIS SHEET
#10 AWG UNLESS NOTED

~REVISIONS~

Metra SIGNAL ENGINEERING
CHICAGO, ILLINOIS

CHICAGO TO ELGIN
GIFFORD ROAD, ELGIN
HXP-3 - TK.2

REFERENCE:			DATE:
33.47 SH. 1 THRU SH. 11			11/11/10
DESIGNED	DRAWN	CHECKED	APPROVED
PB	PB	GG	WK
DISTRICT	PRINT NUMBER		
MW/W	33.47 SH. 3		

17-FEB-2012 09:49

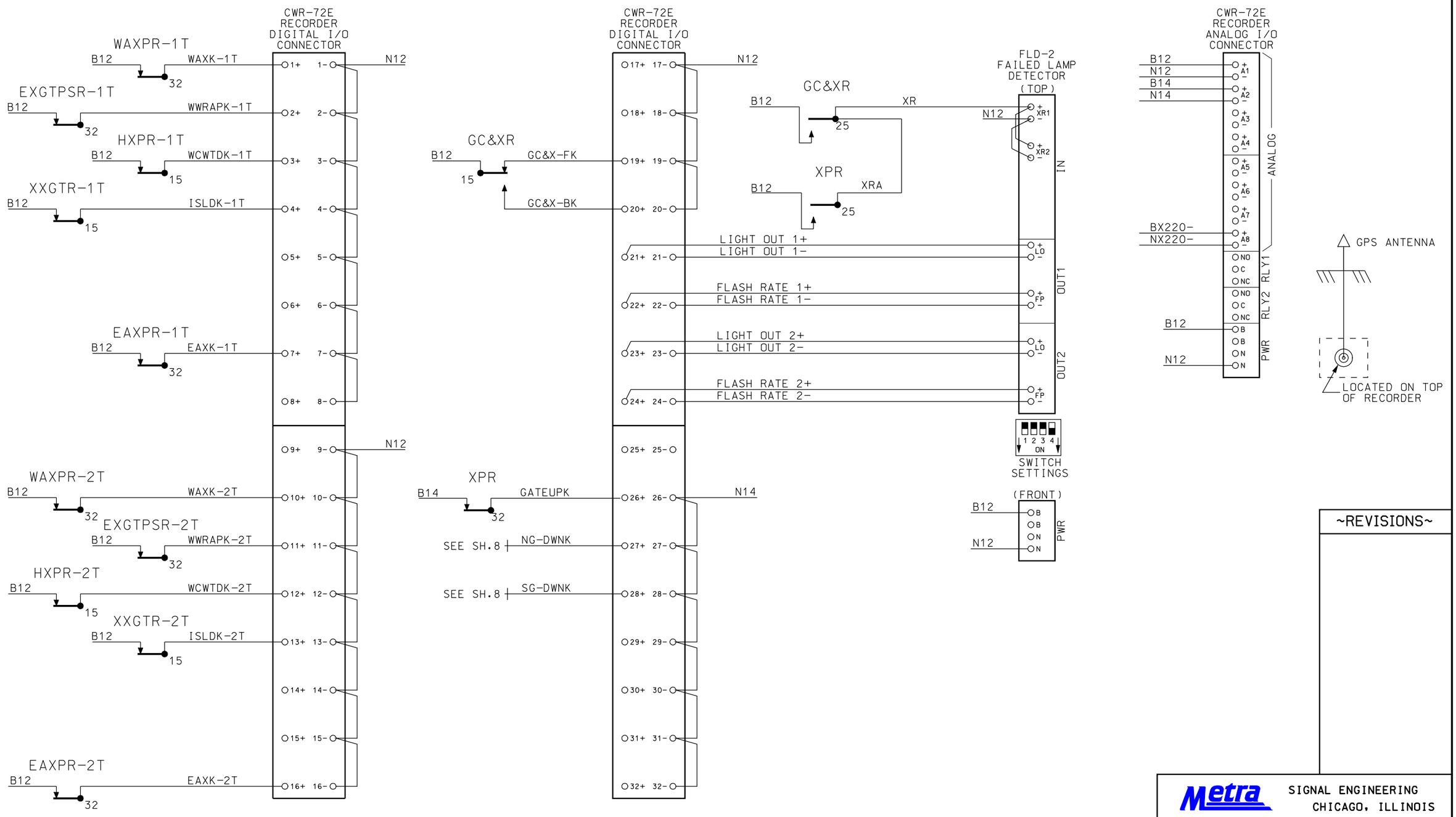

~REVISIONS~

Metra SIGNAL ENGINEERING
CHICAGO, ILLINOIS

CHICAGO TO ELGIN
GIFFORD ROAD, ELGIN
DATA RECORDER

REFERENCE:			DATE:
33.47 SH. 1 THRU SH. 11			11/11/10
DESIGNED	DRAWN	CHECKED	APPROVED
PB	PB		
DISTRICT	PRINT NUMBER		
MW/W	33.47 SH. 4		

17-FEB-2012 09:49

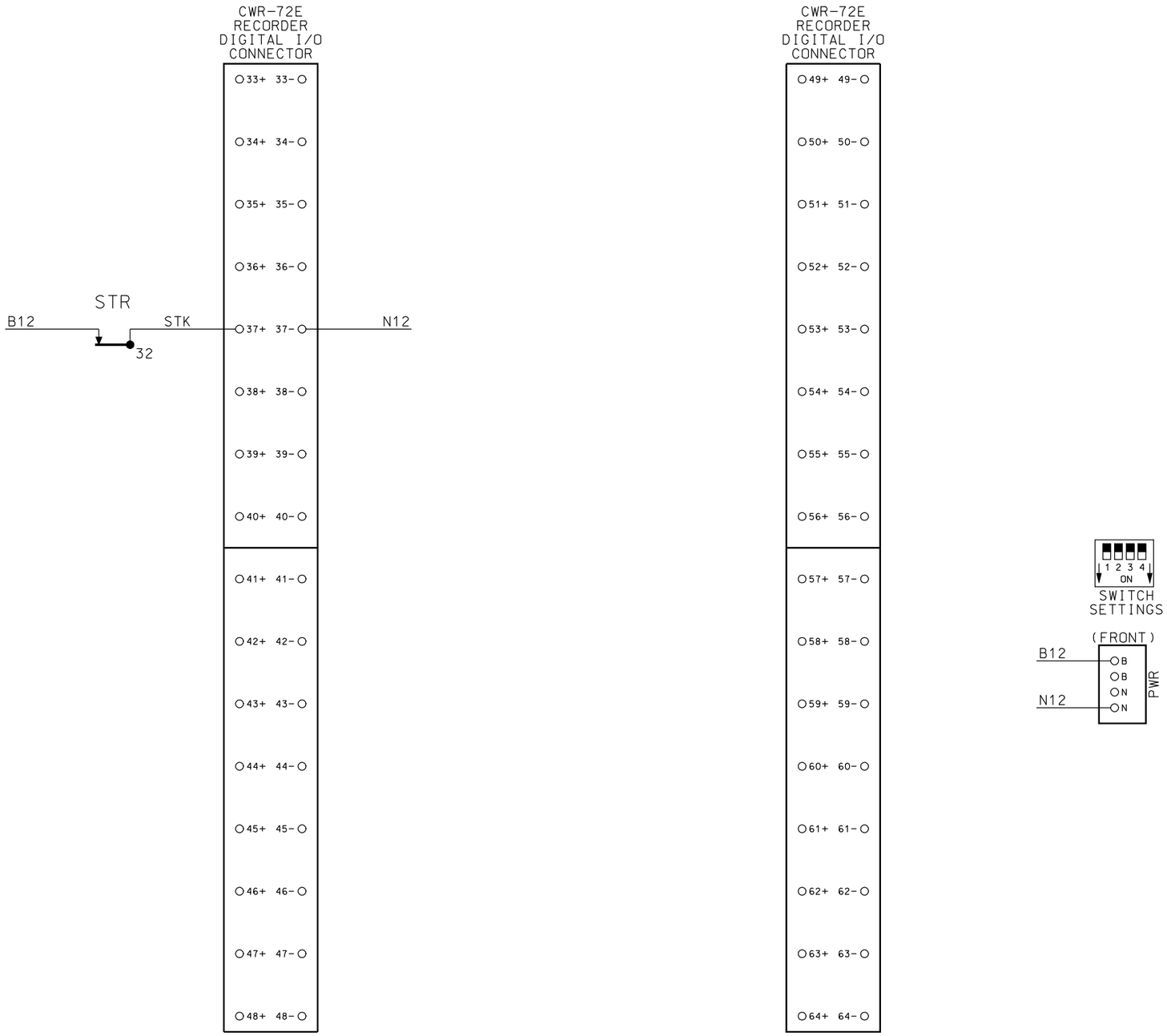

~REVISIONS~

#16 AWG UNLESS NOTED

Metra SIGNAL ENGINEERING
CHICAGO, ILLINOIS

CHICAGO TO ELGIN
GIFFORD ROAD, ELGIN
DATA RECORDER

REFERENCE:			DATE:
33.47 SH. 1 THRU SH. 11			11/11/10
DESIGNED	DRAWN	CHECKED	APPROVED
PB	PB		
DISTRICT	PRINT NUMBER		
MW/W	33.47 SH. 5		

17-FEB-2012 09:49

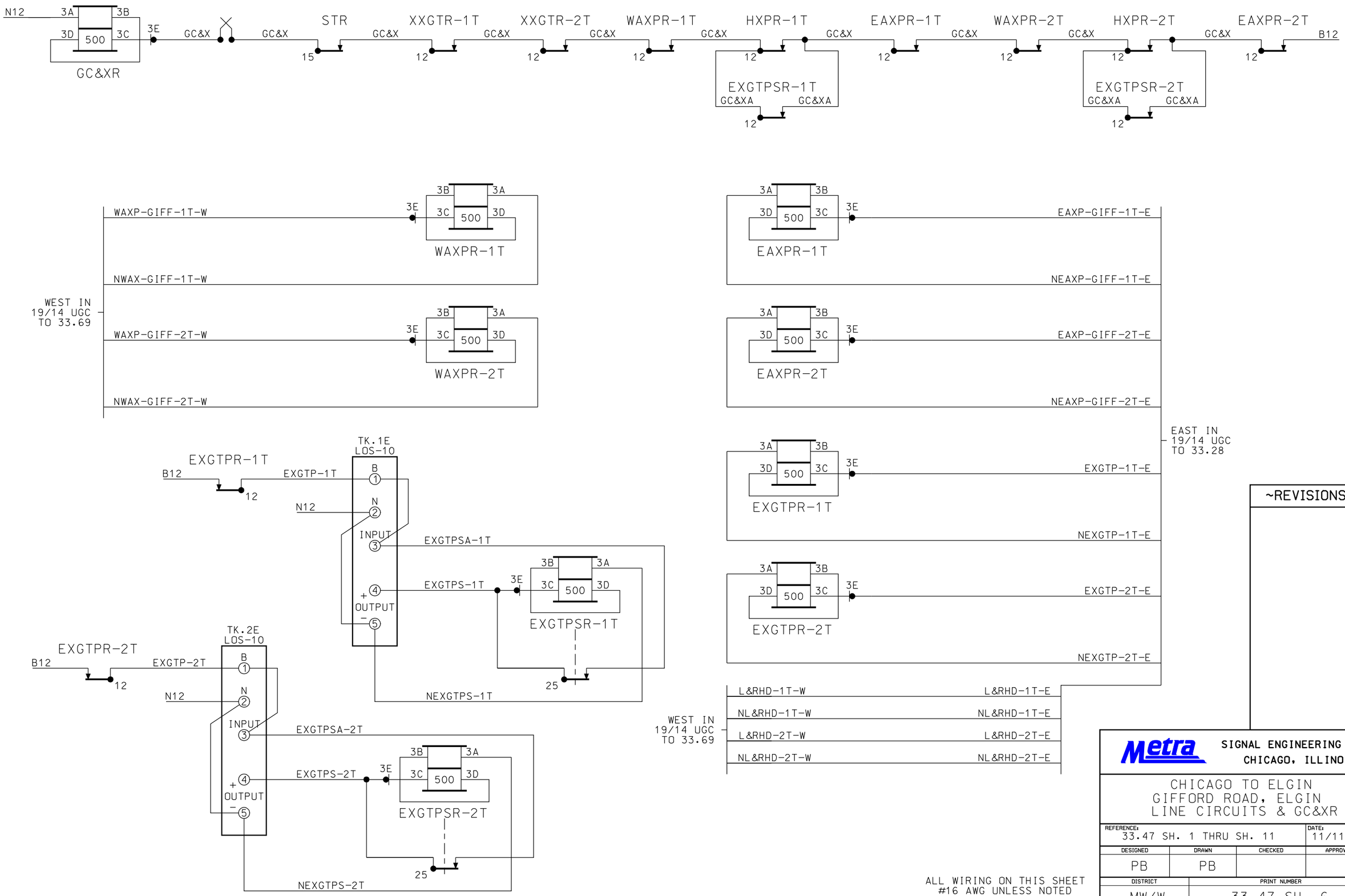

17-FEB-2012 09:49

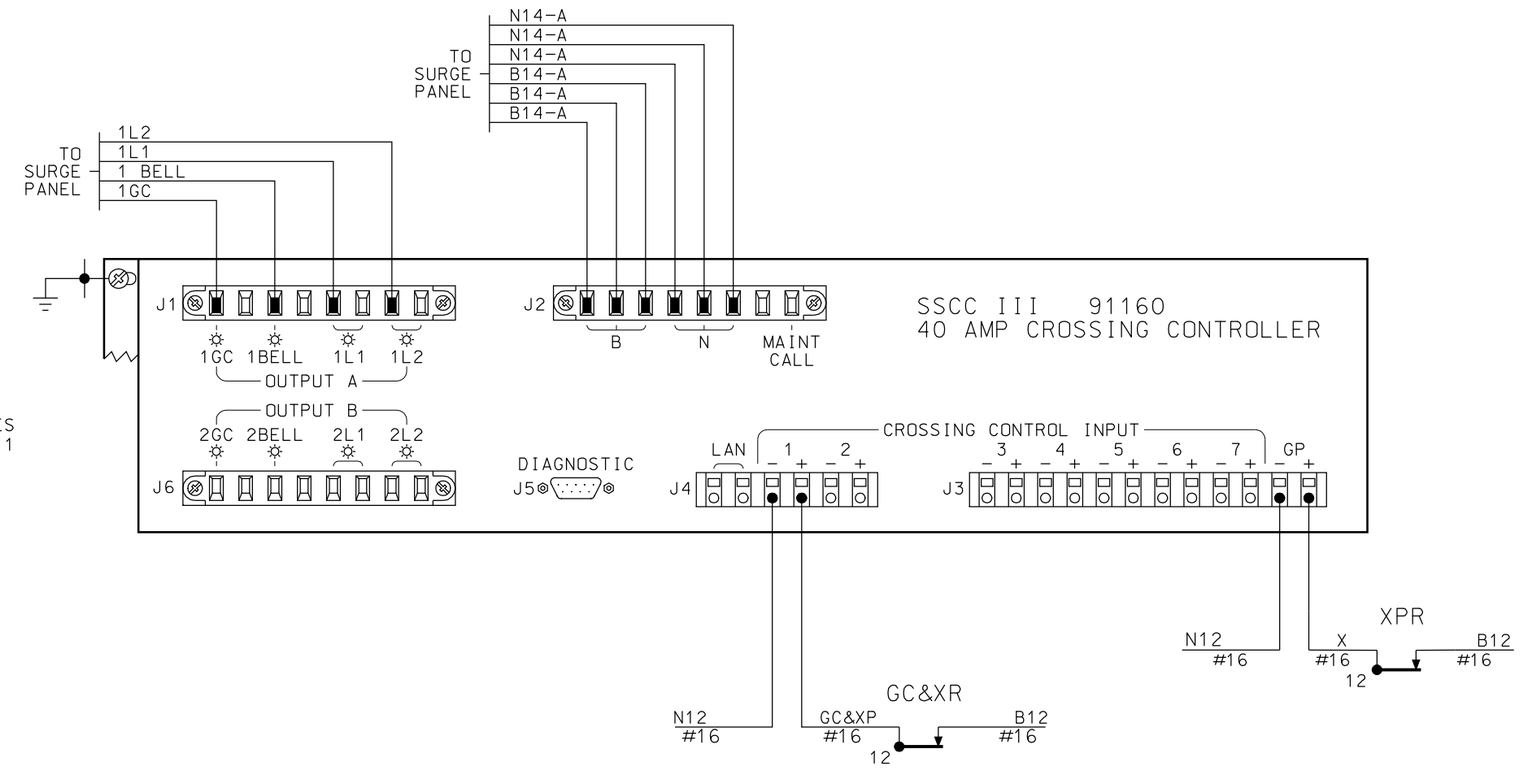

PROGRAM FLASH RATE: 55 PER MIN
PROGRAM 1GC DELAY: 3 SEC
PROGRAM 2GC DELAY: 3 SEC
PROGRAM BELL-ON GATE RISING: YES
PROGRAM ENABLED INPUTS: 1 THRU 1
PROGRAM ENABLED OUTPUTS: A
PROGRAM LOW BATTERY: DISABLED

~REVISIONS~

ALL WIRING ON THIS SHEET
#10 AWG UNLESS NOTED

Metra SIGNAL ENGINEERING
CHICAGO, ILLINOIS

CHICAGO TO ELGIN
GIFFORD ROAD, ELGIN
CROSSING CONTROLLER

REFERENCE:			DATE:
33.47 SH. 1 THRU SH. 11			11/11/10
DESIGNED	DRAWN	CHECKED	APPROVED
PB	PB		
DISTRICT	PRINT NUMBER		
MW/W	33.47 SH. 7		

17-FEB-2012 09:49

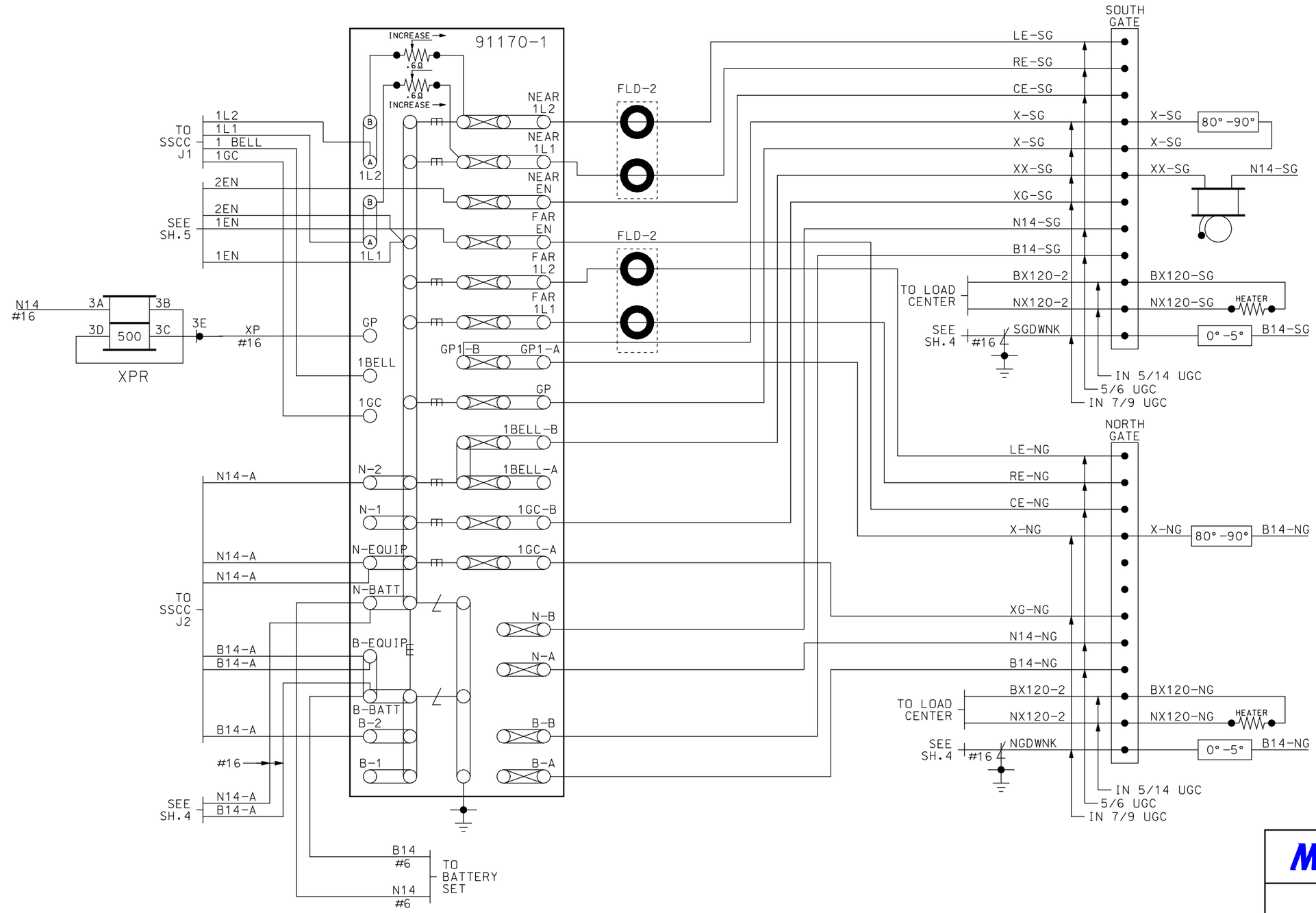

~REVISIONS~

ALL WIRING ON THIS SHEET
#10 AWG UNLESS NOTED

Metra SIGNAL ENGINEERING
CHICAGO, ILLINOIS

CHICAGO TO ELGIN
GIFFORD ROAD, ELGIN
LIGHTING/SURGE PANEL

REFERENCE:			DATE:
33.47 SH. 1 THRU SH. 11			11/11/10
DESIGNED	DRAWN	CHECKED	APPROVED
PB	PB		
DISTRICT	PRINT NUMBER		
MW/W	33.47 SH. 8		

17-FEB-2012 09:49

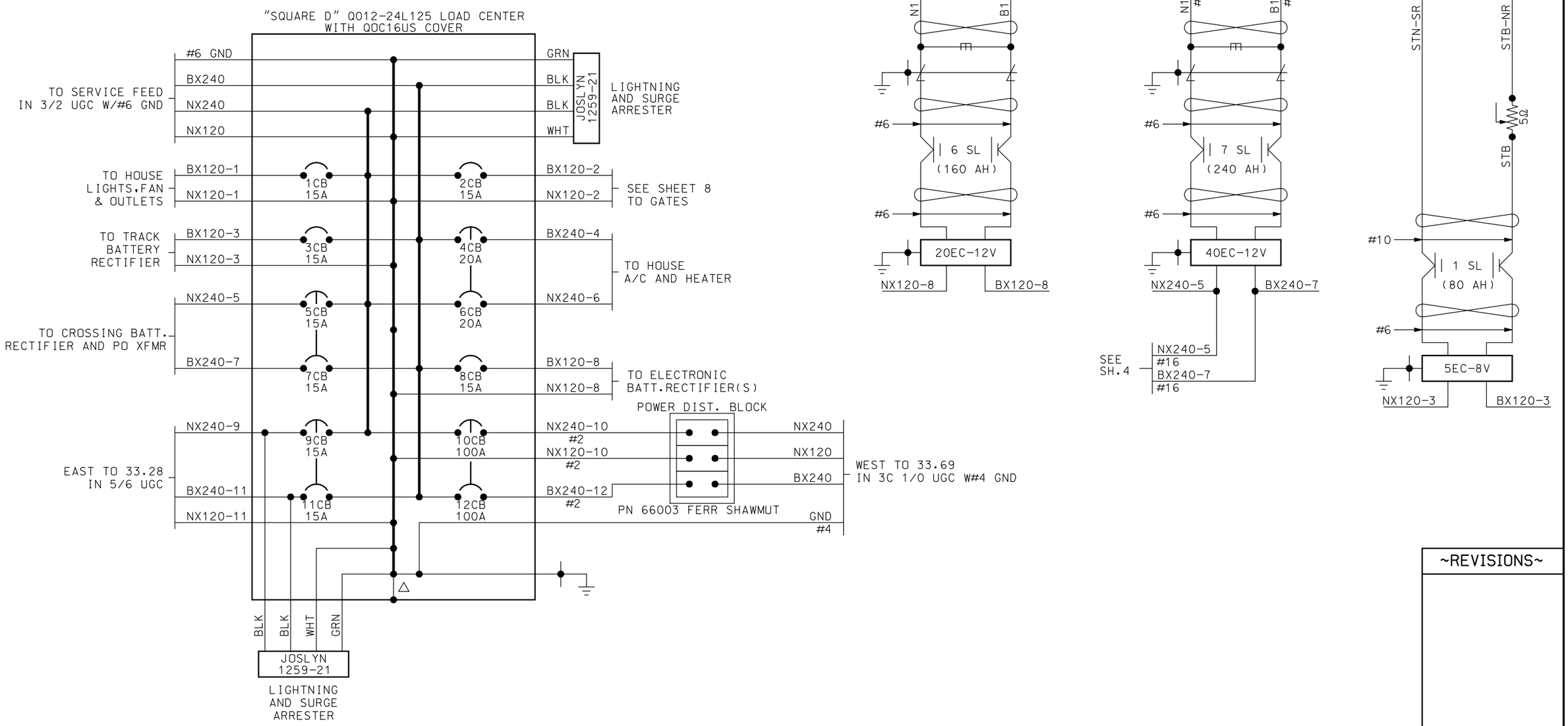

NOTES:

ALL AC POWERED EQUIPMENT SHALL BE GROUNDED WITH GREEN 6 AWG ETFE TO PRIME GROUND.

△ METAL LOAD CENTER HOUSING TO BE GROUNDED TO NEUTRAL BUS USING LONG SCREW PROVIDED.

ONE WIRE TO EACH CB. A MAXIMUM OF TWO MAY BE USED IF NECESSARY.

RUN ALL LOAD CENTER WIRES THROUGH INSULATED GROMMETS.

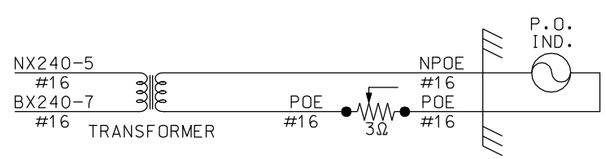

ALL WIRING ON THIS SHEET
#10 AWG UNLESS NOTED

~REVISIONS~

Metra SIGNAL ENGINEERING
CHICAGO, ILLINOIS

CHICAGO TO ELGIN
GIFFORD ROAD, ELGIN
POWER DISTRIBUTION

REFERENCE:			DATE:
33.47 SH. 1 THRU SH. 11			11/11/10
DESIGNED	DRAWN	CHECKED	APPROVED
PB	PB	SG	WK
DISTRICT	PRINT NUMBER		
MW/W	33.47 SH. 9		

17-FEB-2012 09:49

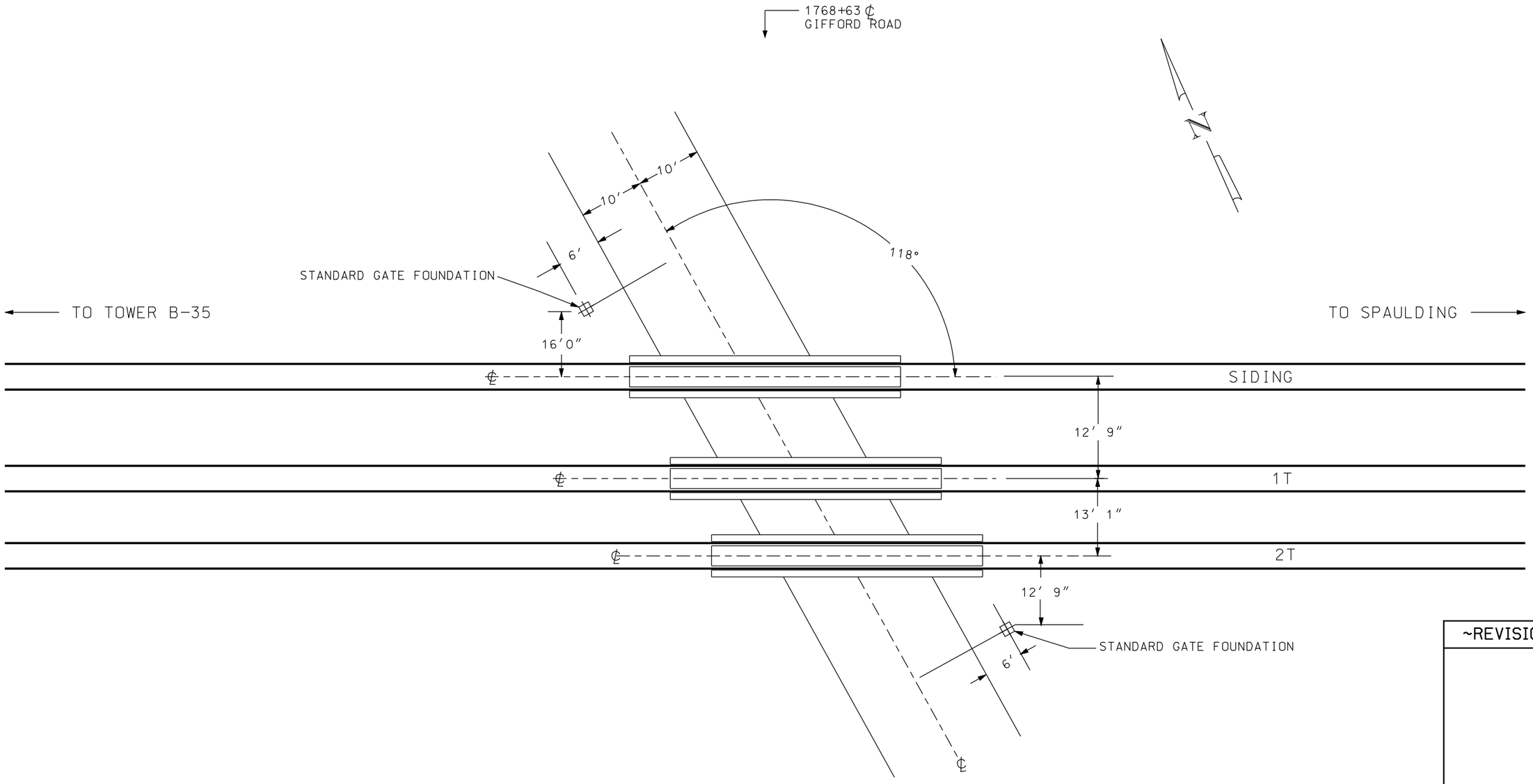

ENLARGED VIEW OF CROSSING
SHOWING LOCATION OF SIGNAL FOUNDATIONS

~ NOT TO SCALE ~

RELAY HOUSE TO BE LOCATED A MINIMUM OF
30 FEET FROM THE EDGE OF THE NEAREST TRAFFIC LANE
AND AN ADEQUATE DISTANCE FROM TRACK IN ORDER TO
REDUCE OBSTRUCTION TO MOTORIST'S SIGHT DISTANCE.

~REVISIONS~

DOT # 372 214T

Metra

SIGNAL ENGINEERING
CHICAGO, ILLINOIS

CHICAGO TO ELGIN
GIFFORD ROAD, ELGIN
ENLARGED VIEW

REFERENCE:			DATE:
33.47 SH. 1 THRU SH. 11			11/11/10
DESIGNED	DRAWN	CHECKED	APPROVED
PB	PB		
DISTRICT	PRINT NUMBER		
MW/W	33.47 SH.10		

17-FEB-2012 09:49

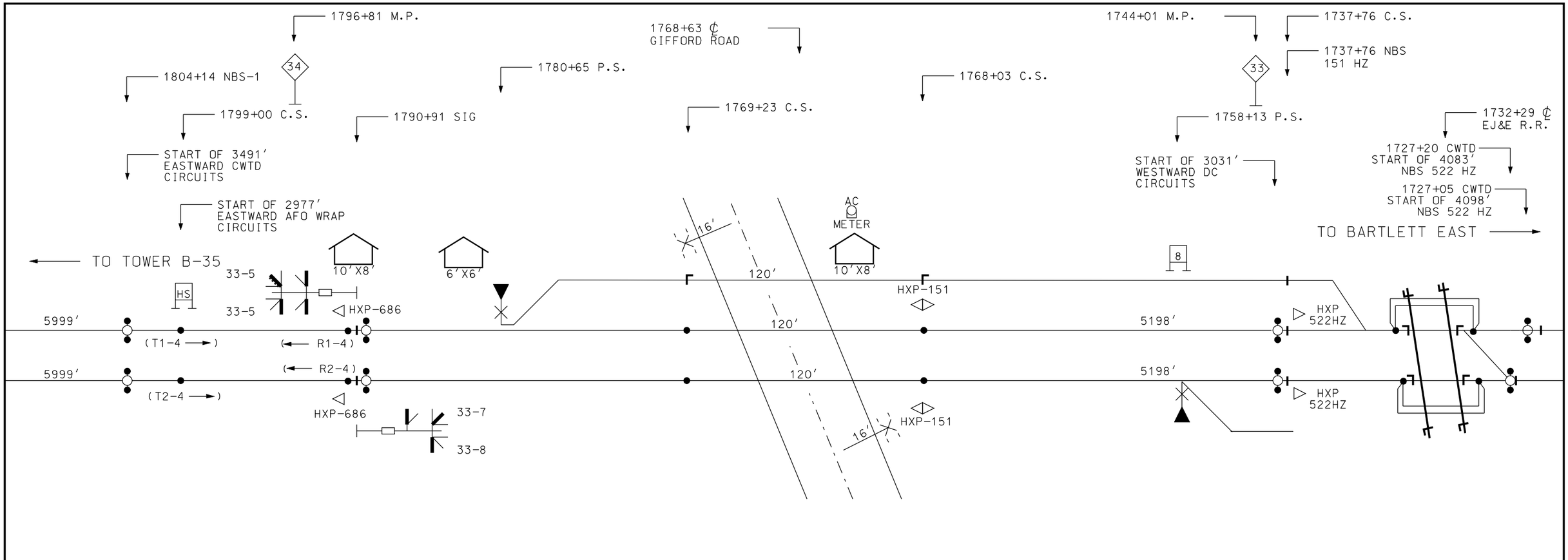

NOTES:

●○●	NARROW BAND SHUNT
◇	BIDIRECTIONAL APPLICATION
▷	BI-DIRECTIONAL APPLICATION IN SINGLE DIRECTION
HXP	HARMON CROSSING PROCESSOR
*** HZ	OPERATION FREQUENCY
CWTD	CONSTANT WARNING TIME DEVICE
AFO	AUDIO FREQUENCY OVERLAY
(T)	AFTAC TRANSMITTER
(R)	AFTAC RECEIVER

EW & WW APPROACH - 1T & 2T AT 70 MPH		
MIN. WARNING TIME	=	20 SEC
WIDE XING TIME	=	4 SEC
REACTION TIME	=	5 SEC
RESPONSE TIME	=	5 SEC
APPROACH LENGTH	=	3491 FT.

~REVISIONS~

DOT # 372 214T

Metra SIGNAL ENGINEERING CHICAGO, ILLINOIS

CHICAGO TO ELGIN
GIFFORD ROAD, ELGIN
EXHIBIT

REFERENCE:			DATE:
33.47 SH. 1 THRU SH. 11			11/11/10
DESIGNED	DRAWN	CHECKED	APPROVED
PB	PB		
DISTRICT	PRINT NUMBER		
MW/W	33.47 SH.11		

17-FEB-2012 09:49

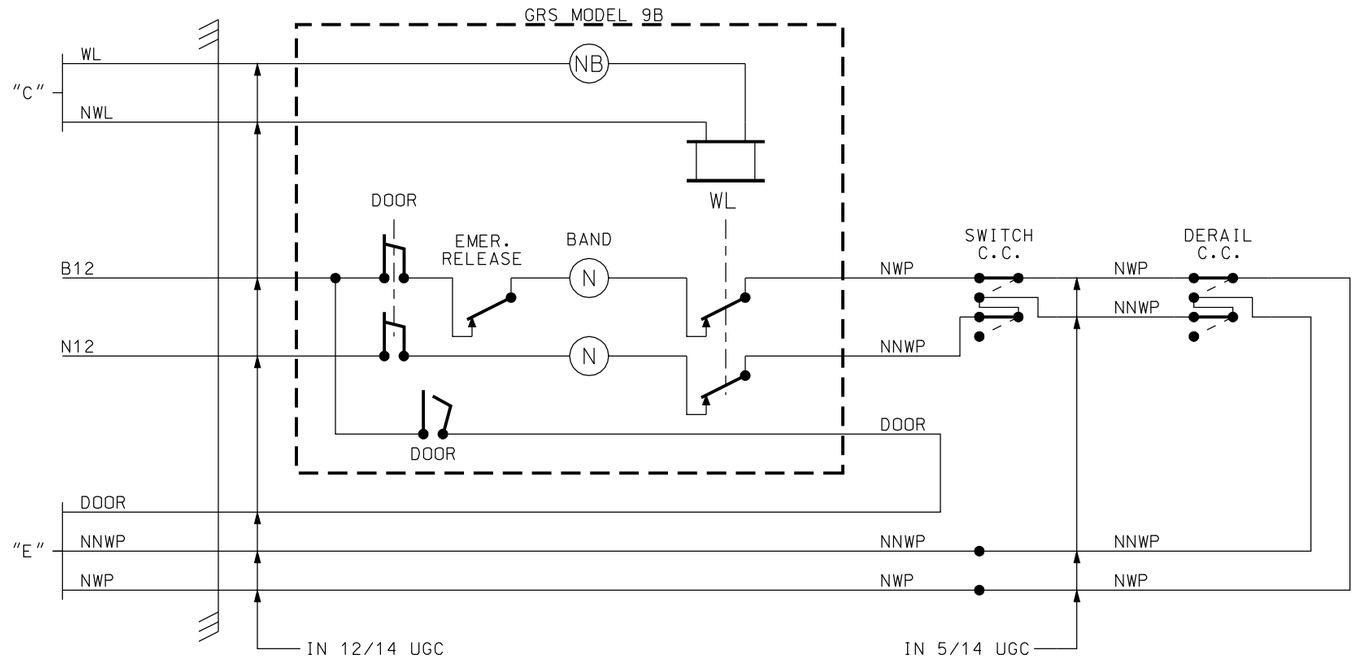

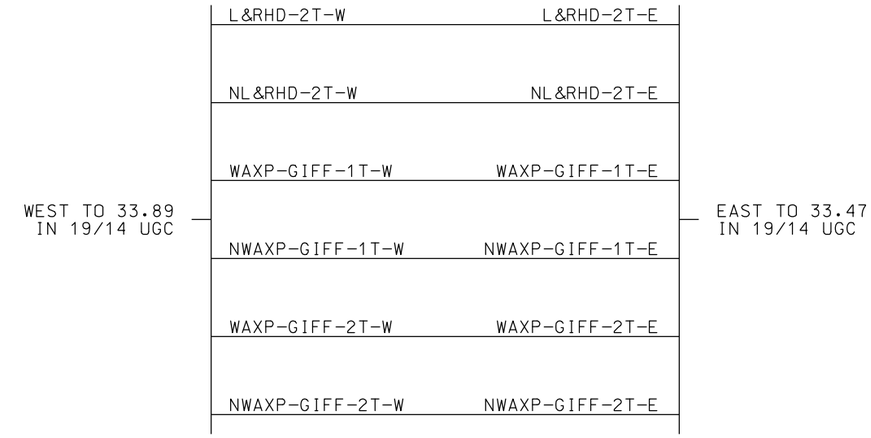

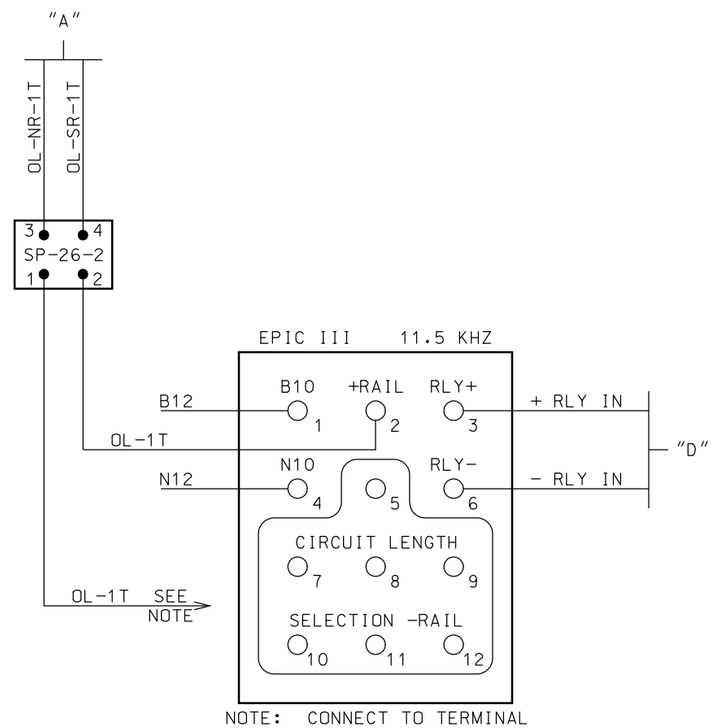

NOTE: CONNECT TO TERMINAL 5, 7, 8, 9, 10, 11, OR 12 TO SET LENGTH OF SHUNT ZONE.

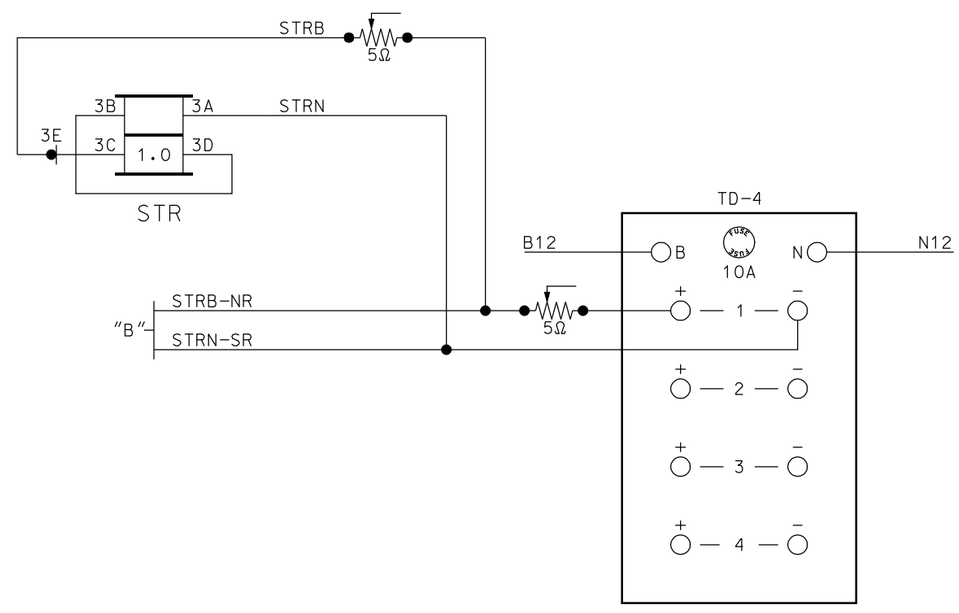

~REVISIONS~

Metra SIGNAL ENGINEERING CHICAGO, ILLINOIS

CHICAGO TO ELGIN
ELECTRIC LOCK
SWITCH LOCK CIRCUITS

REFERENCE:			DATE:
33.69 SH.1 THRU SH. 4			11/11/10
DESIGNED	DRAWN	CHECKED	APPROVED
PB	PB		
DISTRICT	PRINT NUMBER		
MW/W	33.69 SH.3		

17-FEB-2012 09:40

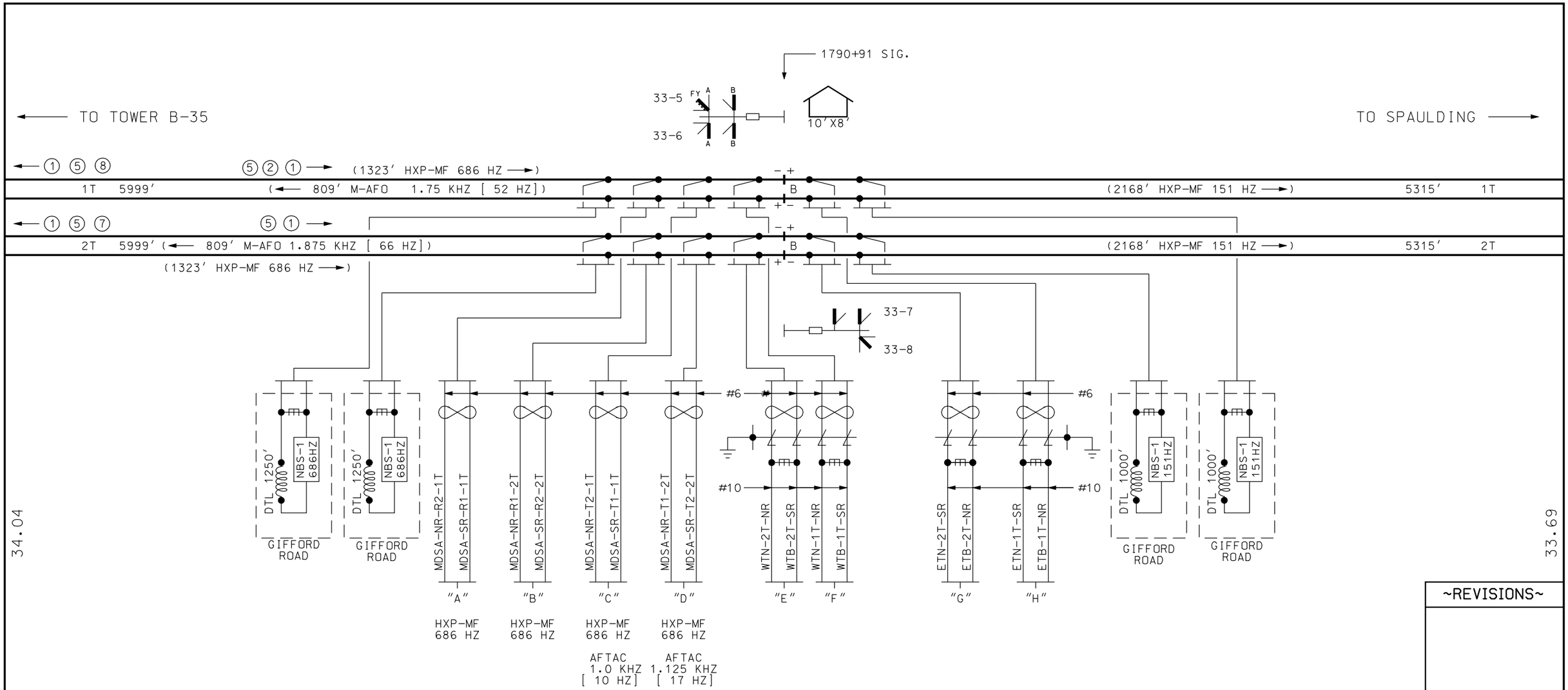

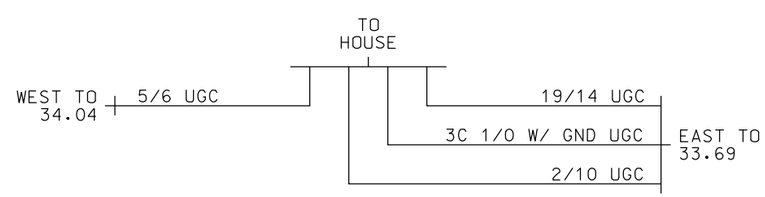

NOTES:

ELECTRO CODE ASPECTS

1 - TRACK
2 - YELLOW
3 - YELLOW/YELLOW
4 - FLASHING YELLOW
5 - BLOCK(ANNUNCIATOR)
6 - TUMBLE DOWN
7 - GREEN
8 - TRAFFIC

PRIME GROUND

~REVISIONS~

Metra SIGNAL ENGINEERING CHICAGO, ILLINOIS

CHICAGO TO ELGIN
335-338 SIGNAL LOCATION
PLAN VIEW

REFERENCE:			DATE:
33.89 SH. 1 THRU SH. 7			11/11/10
DESIGNED	DRAWN	CHECKED	APPROVED
PB	PB		
DISTRICT	PRINT NUMBER		
MW/W	33.89 SH.1		

17-FEB-2012 09:50

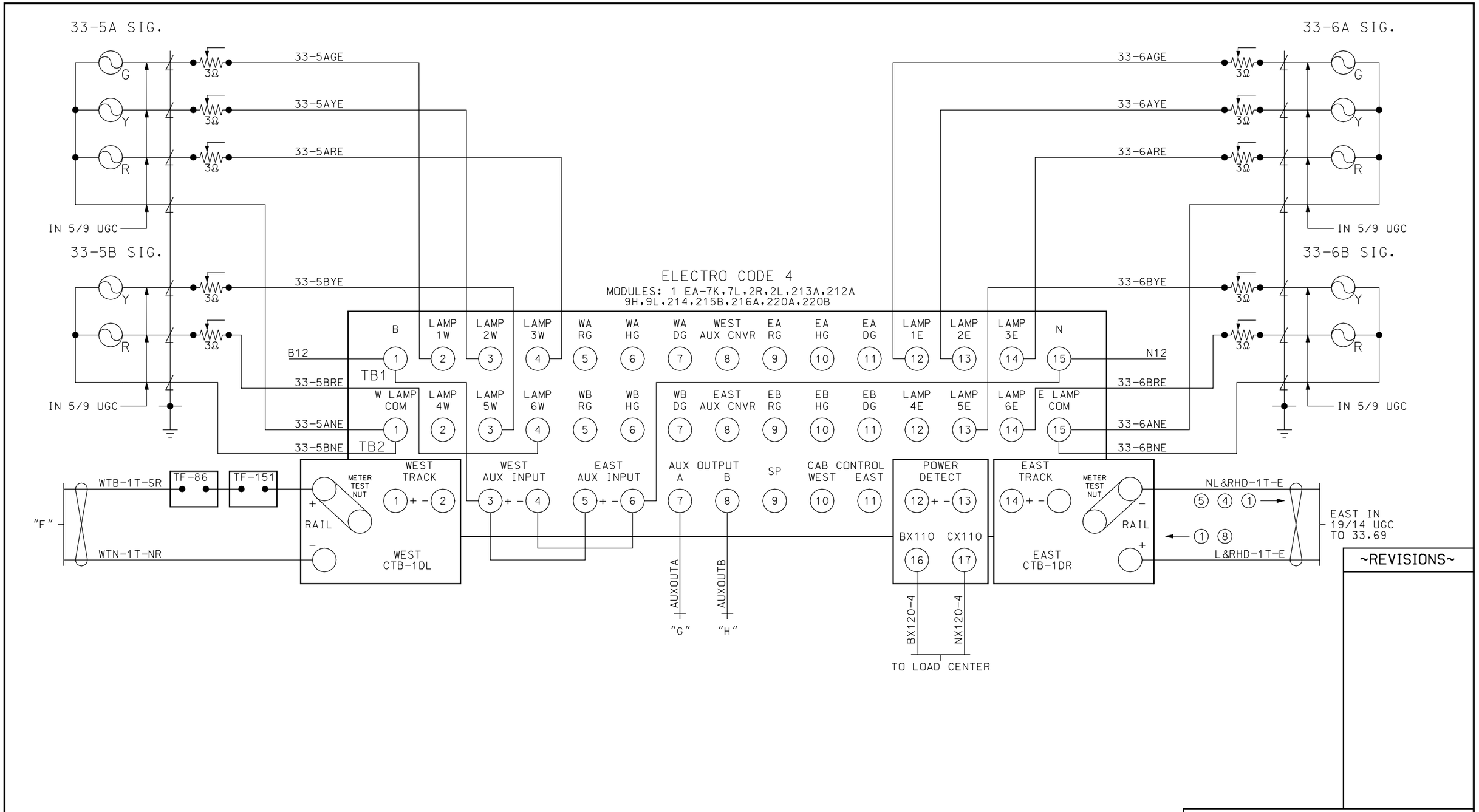

~REVISIONS~

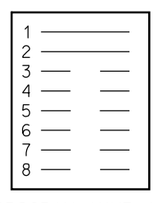

PROGRAM AHWF-A5
STRAPS 3,4,5,6,7,8, ARE CUT

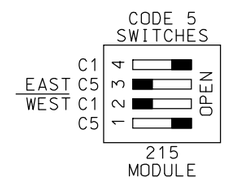

ALL WIRING ON THIS SHEET
#10 AWG UNLESS NOTED

Metra SIGNAL ENGINEERING
CHICAGO, ILLINOIS

CHICAGO TO ELGIN
335-338 SIGNAL LOCATION
ELECTROCODE 4 TK.1

REFERENCE: 33.89 SH.1 THRU SH.7			DATE: 11/11/10
DESIGNED	DRAWN	CHECKED	APPROVED
PB	PB		
DISTRICT	PRINT NUMBER		
MW/W	33.89 SH.2		

17-FEB-2012 09:50

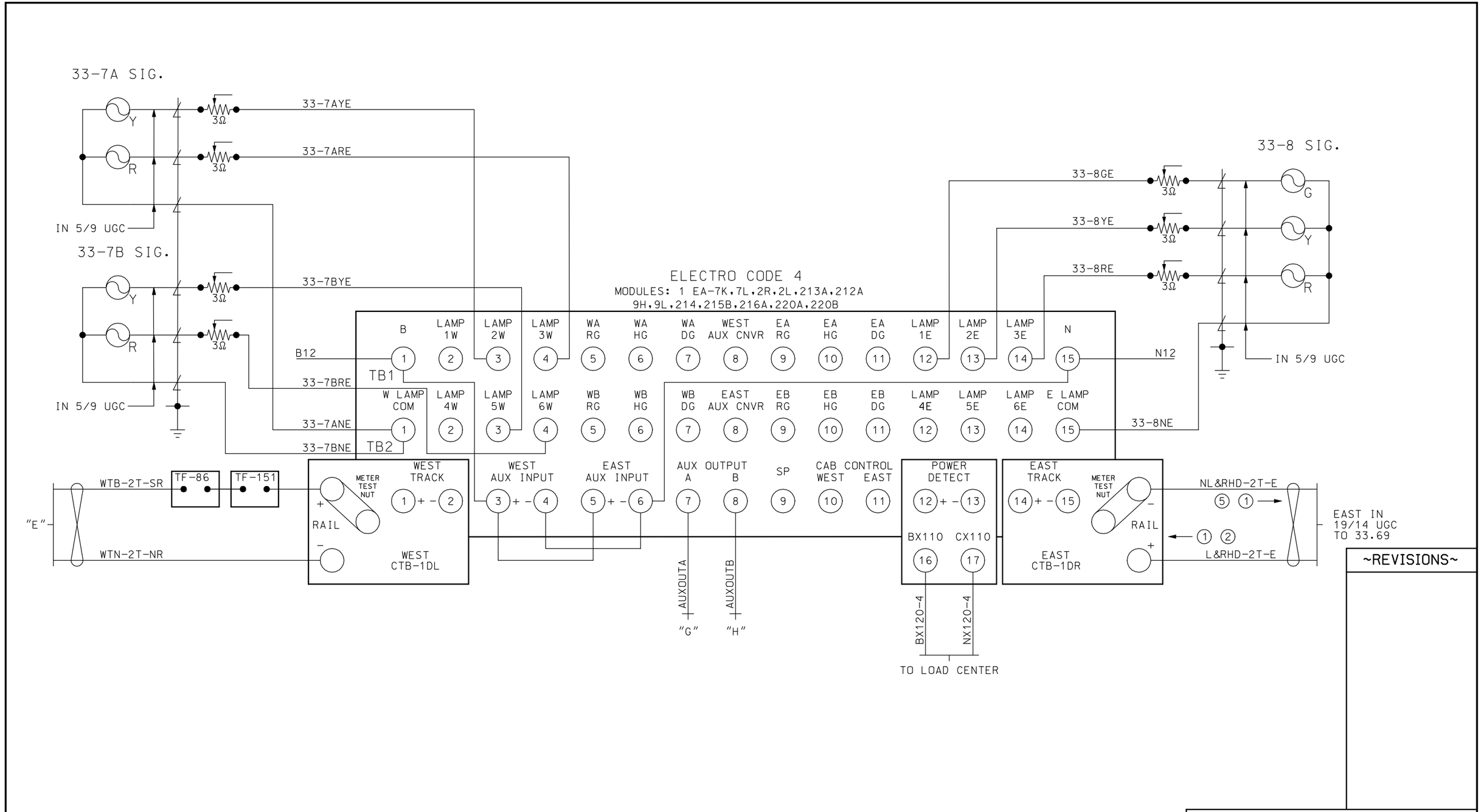

~REVISIONS~

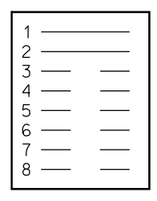

PROGRAM AHWF-A5
STRAPS 3,4,5,6,7,8, ARE CUT

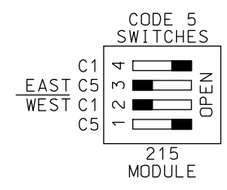

ALL WIRING ON THIS SHEET
#10 AWG UNLESS NOTED

Metra SIGNAL ENGINEERING
CHICAGO, ILLINOIS

CHICAGO TO ELGIN
335-338 SIGNAL LOCATION
ELECTROCODE 4 TK.2

REFERENCE: 33.89 SH.1 THRU SH.7			DATE: 11/11/10
DESIGNED	DRAWN	CHECKED	APPROVED
PB	PB		
DISTRICT	PRINT NUMBER		
MW/W	33.89 SH.3		

17-FEB-2012 09:50

TK.1 = TK.1 WEST
TK.2 = DISABLED

ADJUST SEL
APPROACH LENGTH:
TK.1 - 1323'

WARNING TIME:
TK.1 - 29 SEC.

MD RESTART:
TK.1 - 0

OPTIONS
1. TK-ENA:
TK.1 - UP
TK.2 - dn

2. TK FO
TK.1 - STRAP

3. CW/MD
TK.1 - C

4. UNI-BI
TK.1 - b

6. CWEWT
TK.1 - 80

7. LOS
TK.1 - 16

8. IJ-LOS
TK.1 - 5

11. AX 1
TK-ASN - 1
OF-TK1 - 2168'
WT -
MD-RST - 0
CW/MD - C
CJ-LOS - 15
PJ-DET - 15
POS-ST - dn

12. AX 2
TK-ASN -
OF-TK1 -
WT -
MD-RST -
CW/MD -
CJ-LOS -
PJ-DET -
POS-ST -

13. AX 3
TK-ASN -
OF-TK1 -
WT -
MD-RST -
CW/MD -
CJ-LOS -
PJ-DET -
POS-ST -

17. MDR-AX -

18. MD-TMR
TK.1 - 10

19. MIN-WT - 0

20. FS-DET - 0

48. PF-ENA - UP

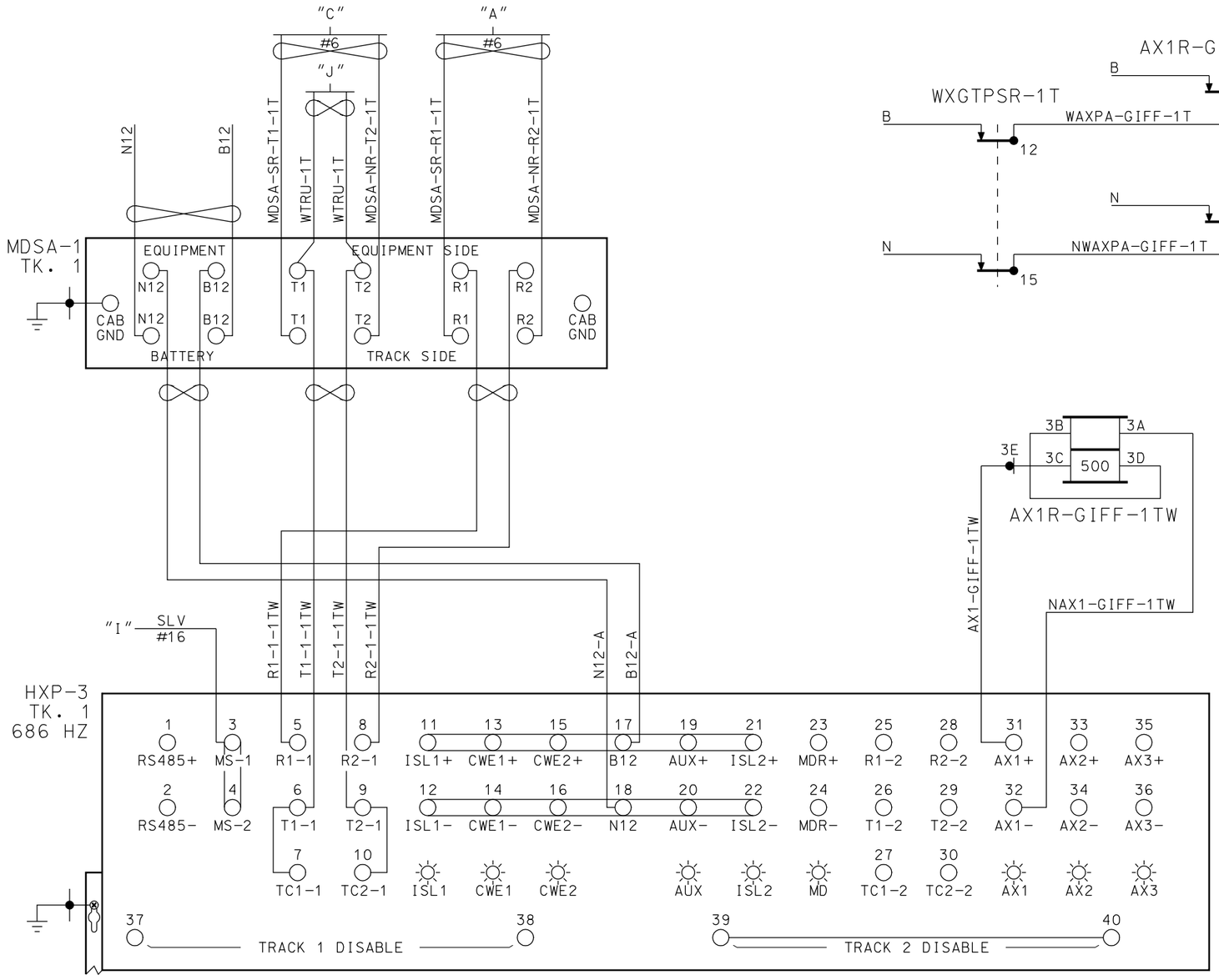

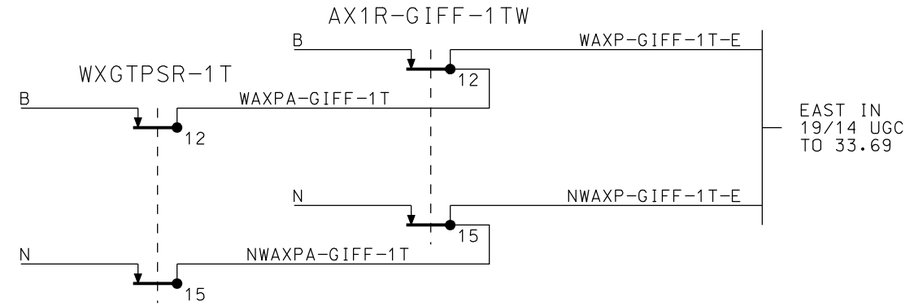

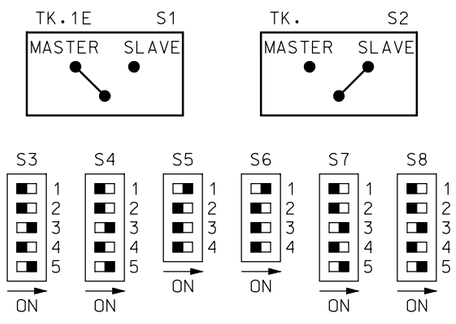

HXP-3 MODULE SETUP

RMM MODULE	SIM MODULE		TRM MODULE	RSI MODULE	RYD MODULE	EMPTY SLOT	EMPTY SLOT	CPU MODULE	AXD MODULE

RSI MODULE SLOT 4
FREQ. 8.0 KHZ
LOS JUMPER = 0
FAULT JUMPER = 0

ALL WIRING ON THIS SHEET
#10 AWG UNLESS NOTED

~REVISIONS~

Metra SIGNAL ENGINEERING
CHICAGO, ILLINOIS

CHICAGO TO ELGIN
335-338 SIGNAL LOCATION
HXP-3 - TK. 1

REFERENCE: 33.89 SH.1 THRU SH.7			DATE: 11/11/10
DESIGNED	DRAWN	CHECKED	APPROVED
PB	PB		
DISTRICT	PRINT NUMBER		
MW/W	33.89 SH. 4		

17-FEB-2012 09:50

TK.1 = TK.2 WEST
TK.2 = DISABLED

ADJUST SEL
- APPROACH LENGTH: TK.1 - 1323'
- WARNING TIME: TK.1 - 29 SEC.
- MD RESTART: TK.1 - 0

OPTIONS
1. TK-ENA: TK.1 - UP; TK.2 - dn
2. TK FO: TK.1 - STRAP
3. CW/MD: TK.1 - C
4. UNI-BI: TK.1 - b
6. CWEWT: TK.1 - 80
7. LOS: TK.1 - 16
8. IJ-LOS: TK.1 - 5
11. AX 1: TK-ASN - 1; OF-TK1 - 2168'; WT -; MD-RST - 0; CW/MD - C; CJ-LOS - 15; PJ-DET - 15; POS-ST - dn
12. AX 2: TK-ASN -; OF-TK1 -; WT -; MD-RST -; CW/MD -; CJ-LOS -; PJ-DET -; POS-ST -
13. AX 3: TK-ASN -; OF-TK1 -; WT -; MD-RST -; CW/MD -; CJ-LOS -; PJ-DET -; POS-ST -
17. MDR-AX -
18. MD-TMR: TK.1 - 10
19. MIN-WT - 0
20. FS-DET - 0
48. PF-ENA - UP

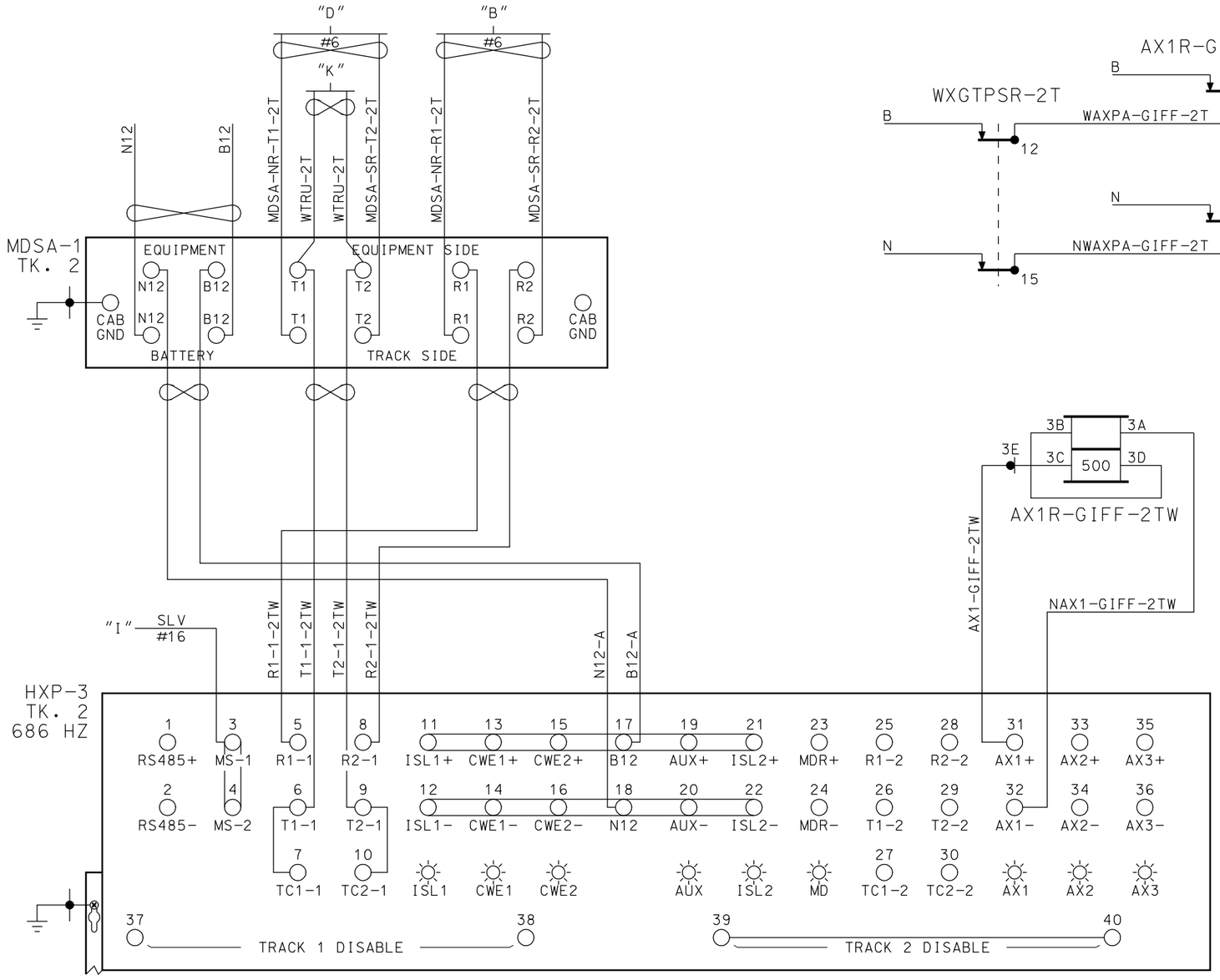

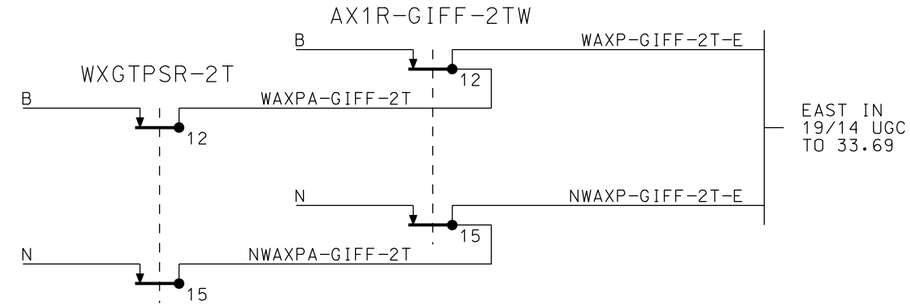

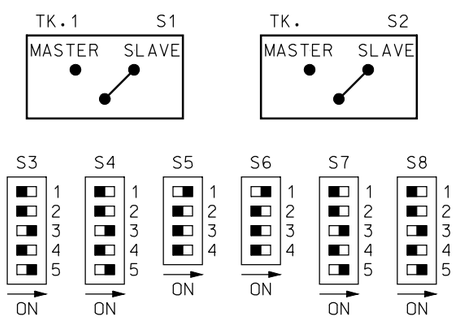

HXP-3 MODULE SETUP

RMM MODULE	SIM MODULE		TRM MODULE	RSI MODULE	RYD MODULE	EMPTY SLOT	EMPTY SLOT	CPU MODULE	AXD MODULE

RSI MODULE SLOT 4
FREQ. 8.0 KHZ
LOS JUMPER = 0
FAULT JUMPER = 0

ALL WIRING ON THIS SHEET
#10 AWG UNLESS NOTED

~REVISIONS~

Metra SIGNAL ENGINEERING
CHICAGO, ILLINOIS

CHICAGO TO ELGIN
335-338 SIGNAL LOCATION
HXP-3 - TK. 2

REFERENCE: 33.89 SH.1 THRU SH.7			DATE: 11/11/10
DESIGNED	DRAWN	CHECKED	APPROVED
PB	PB		
DISTRICT	PRINT NUMBER		
MW/W	33.89 SH. 5		

17-FEB-2012 09:50

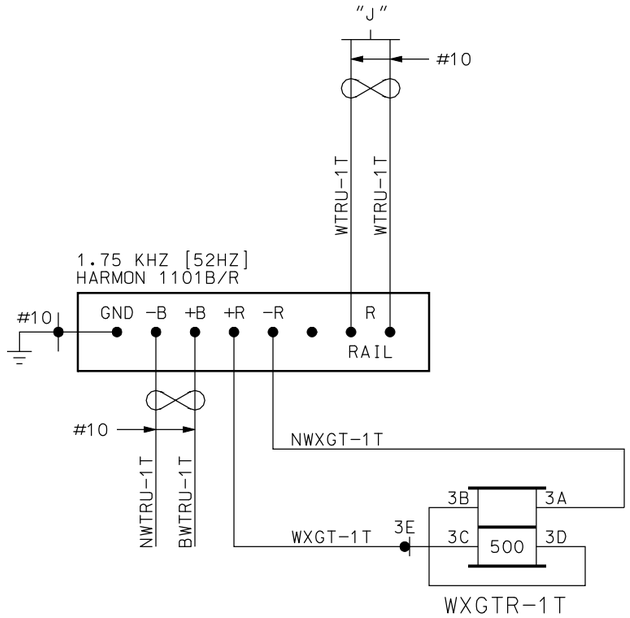

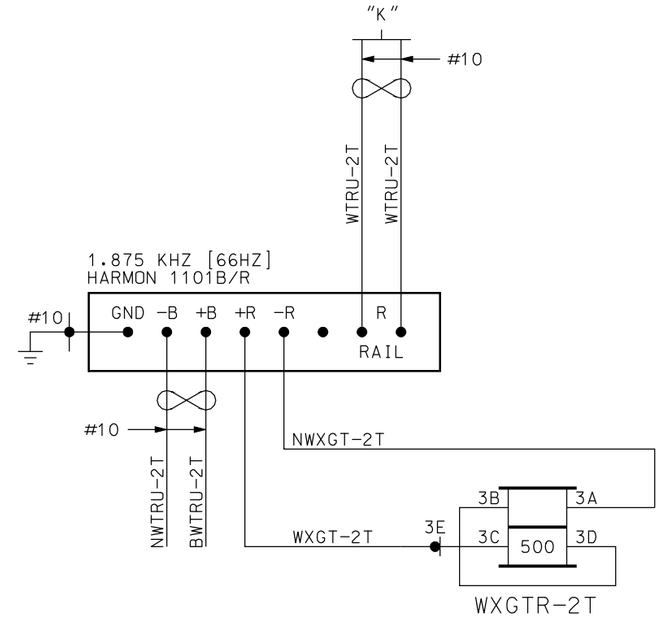

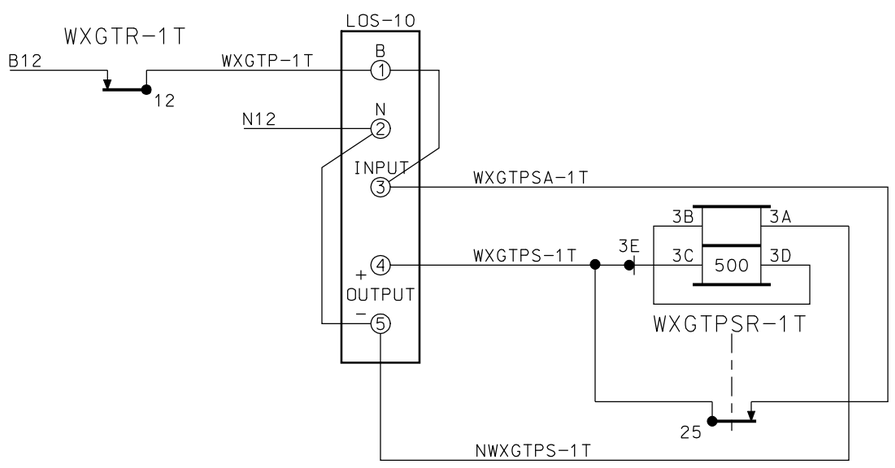

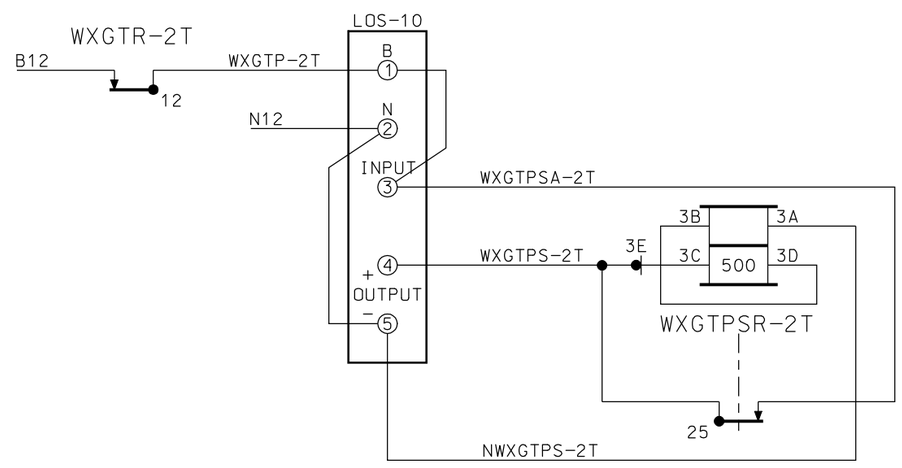

~REVISIONS~

ALL WIRING ON THIS SHEET
#16 AWG UNLESS NOTED

Metra SIGNAL ENGINEERING
CHICAGO, ILLINOIS

CHICAGO TO ELGIN
335-338 SIGNAL LOCATION
AFTAC & LOSS OF SHUNT

REFERENCE:			DATE:
33.89 SH.1 THRU SH.7			11/11/10
DESIGNED	DRAWN	CHECKED	APPROVED
PB	PB		
DISTRICT	PRINT NUMBER		
MW/W	33.89 SH.6		

17-FEB-2012 09:50

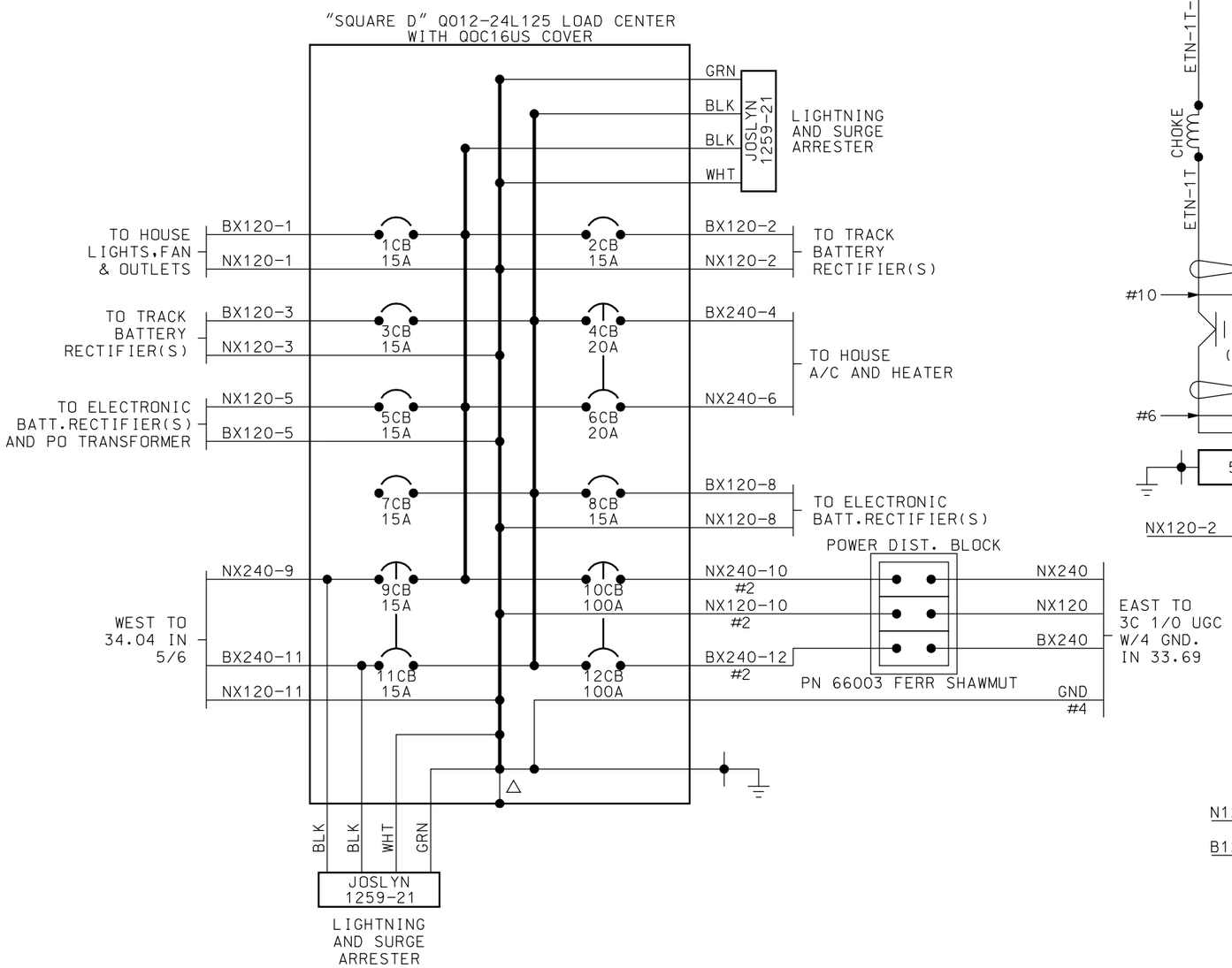

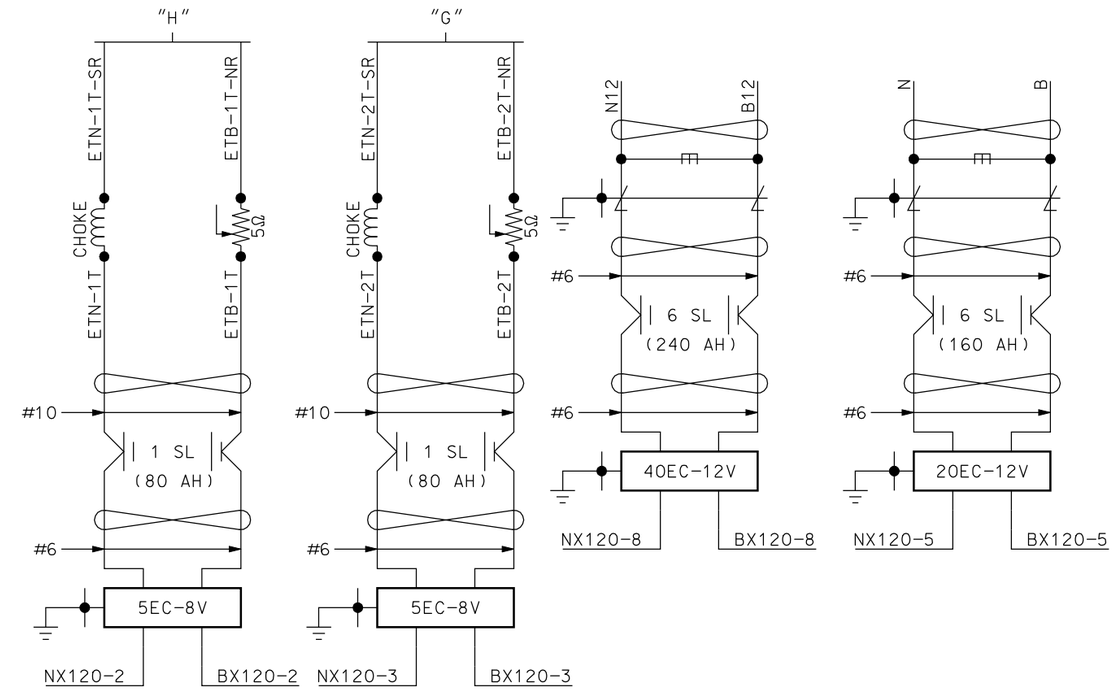

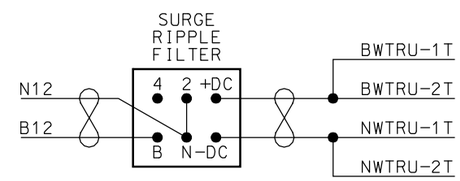

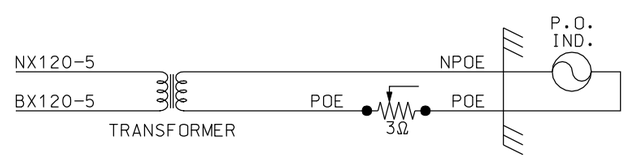

NOTES:

ALL AC POWERED EQUIPMENT SHALL BE GROUNDED WITH GREEN 6 AWG ETFE TO PRIME GROUND.

△ METAL LOAD CENTER HOUSING TO BE GROUNDED TO NEUTRAL BUS USING LONG SCREW PROVIDED.

ONE WIRE TO EACH CB. A MAXIMUM OF TWO MAY BE USED IF NECESSARY.

RUN ALL LOAD CENTER WIRES THROUGH INSULATED GROMMETS.

ALL WIRING ON THIS SHEET #10 AWG UNLESS NOTED

~REVISIONS~

Metra SIGNAL ENGINEERING CHICAGO, ILLINOIS

CHICAGO TO ELGIN
335-338 SIGNAL LOCATION
POWER DISTRIBUTION

REFERENCE:			DATE:
33.89 SH.1 THRU SH.7			11/11/10
DESIGNED	DRAWN	CHECKED	APPROVED
PB	PB		
DISTRICT	PRINT NUMBER		
MW/W	33.89 SH.7		

17-FEB-2012 09:50

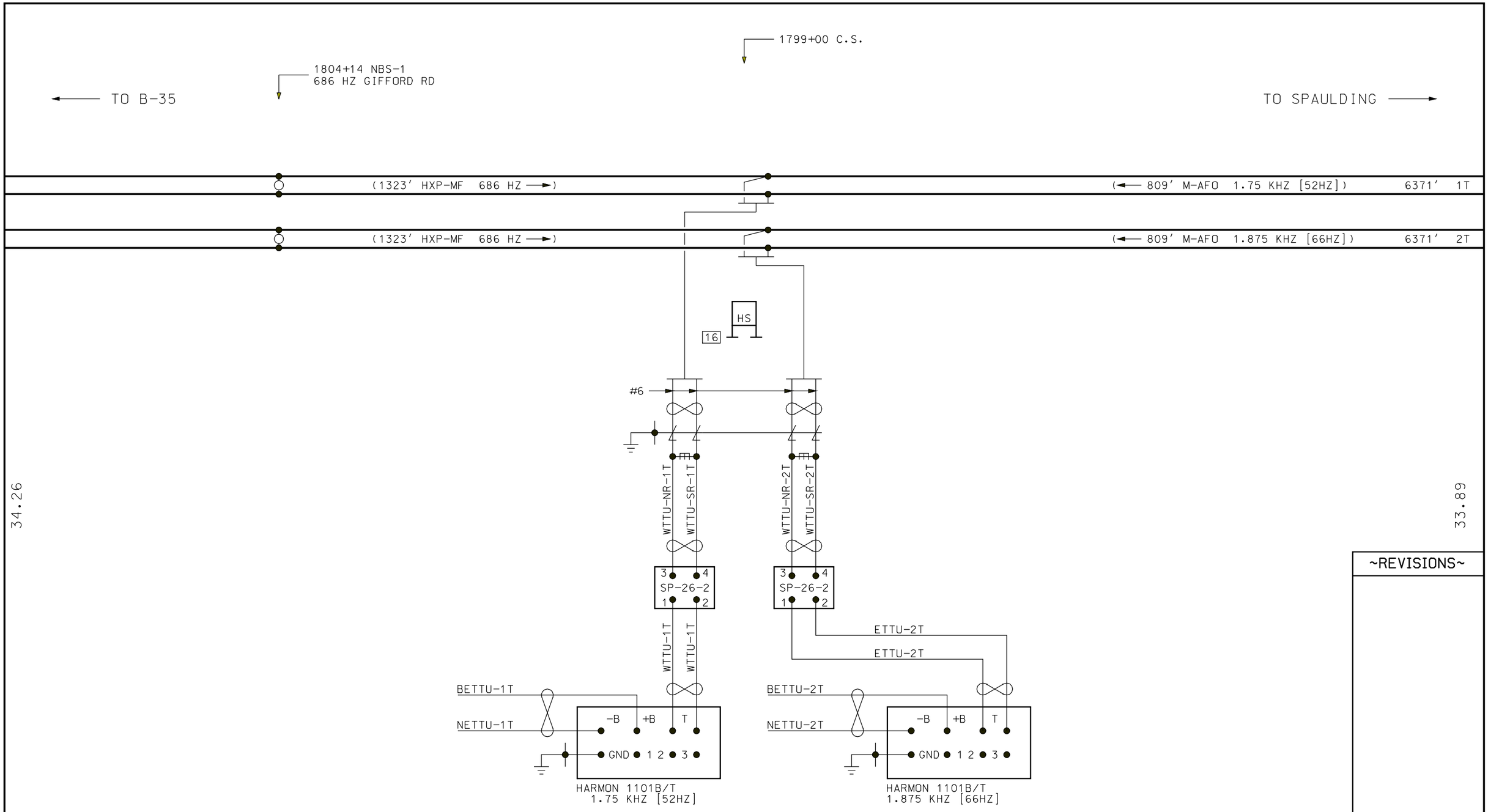

PRIME GROUND

(← 3824' HXP-MF 86 HZ)

FREQUENCY
LENGTH OF CIRCUIT
DIRECTION TO TRANSMITTER

TO CASE

5/6 UGC — EAST TO 33.89

ALL WIRING ON THIS SHEET
#10 AWG UNLESS NOTED

~REVISIONS~

Metra SIGNAL ENGINEERING
CHICAGO, ILLINOIS

CHICAGO TO ELGIN
E.B.AFO WRAP - GIFFORD RD.
PLAN VIEW

REFERENCE:			DATE:
34.26 SH.1 THRU SH.2			11/11/10
DESIGNED	DRAWN	CHECKED	APPROVED
PB	PB	LP	WPK
DISTRICT	PRINT NUMBER		
MW/W	34.04 SH.1		

17-FEB-2012 09:50

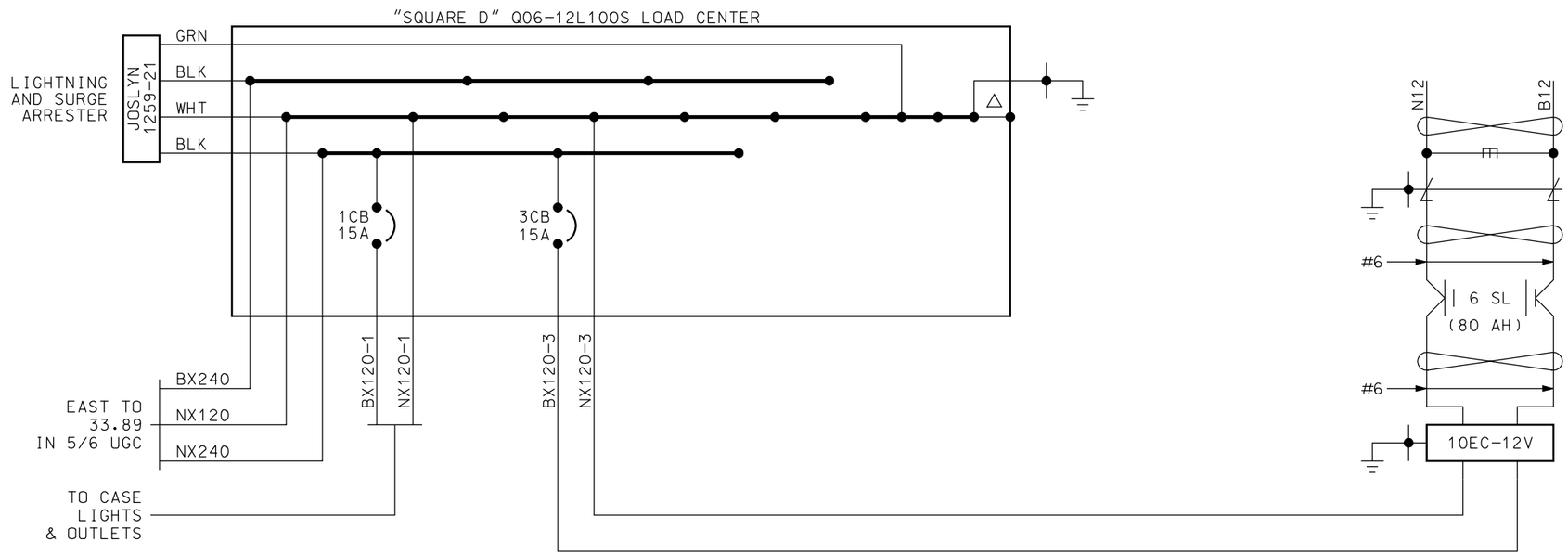

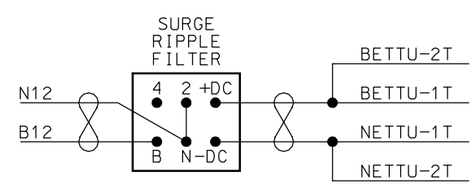

NOTES:

ALL AC POWERED EQUIPMENT SHALL BE GROUNDED WITH GREEN 6 AWG ETFE TO PRIME GROUND.

△ METAL LOAD CENTER HOUSING TO BE GROUNDED TO NEUTRAL BUS USING LONG SCREW PROVIDED.

ONE WIRE TO EACH CB. A MAXIMUM OF TWO MAY BE USED IF NECESSARY.

RUN ALL LOAD CENTER WIRES THROUGH INSULATED GROMMETS.

ALL WIRING ON THIS SHEET #10 AWG UNLESS NOTED

~REVISIONS~

Metra SIGNAL ENGINEERING CHICAGO, ILLINOIS

CHICAGO TO ELGIN
E.B.AFO WRAP - GIFFORD RD.
POWER DISTRIBUTION

REFERENCE:			DATE:
34.26 SH.1 THRU SH.2			11/11/10
DESIGNED	DRAWN	CHECKED	APPROVED
PB	PB	SP	WK
DISTRICT	PRINT NUMBER		
MW/W	34.04 SH.2		

17-FEB-2012 09:50