PLAN MUST NOT BE MODIFIED WITHOUT APPROVAL OF SIGNAL ENGINEERING COPYRIGHT 2011 BNSF RAILWAY COMPANY. ALL RIGHTS RESERVED.

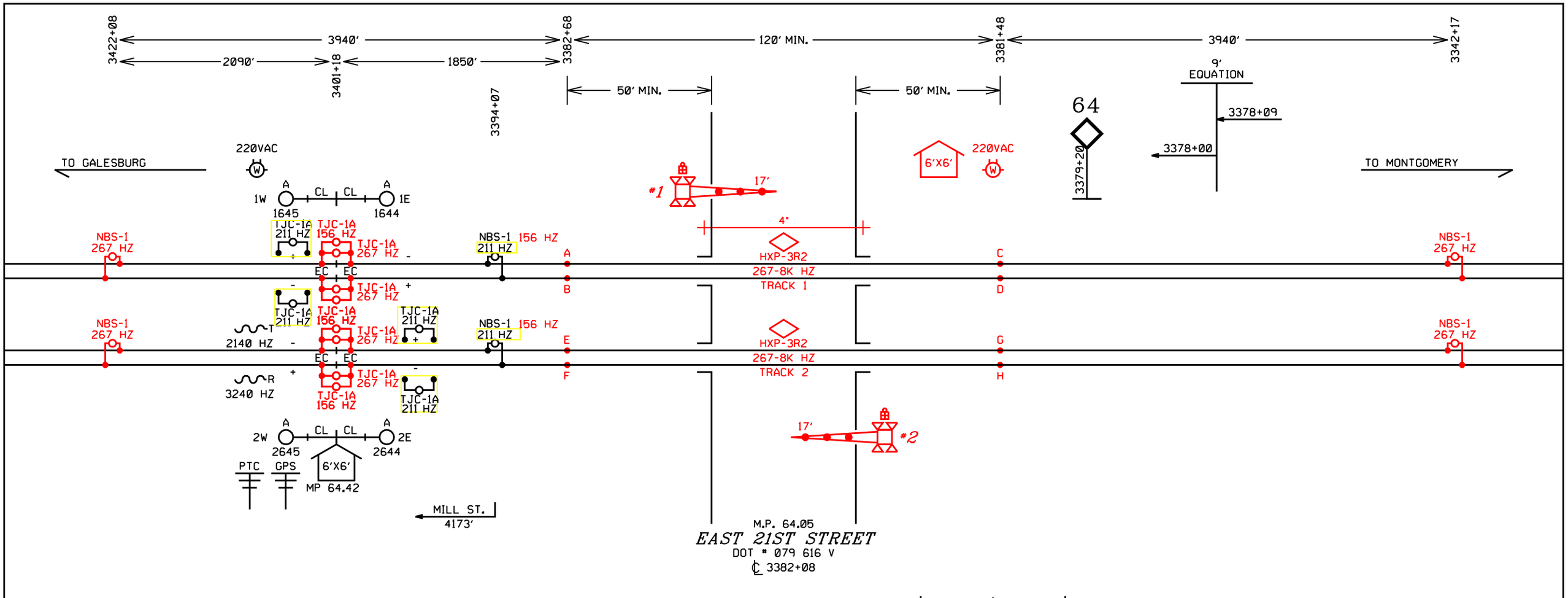

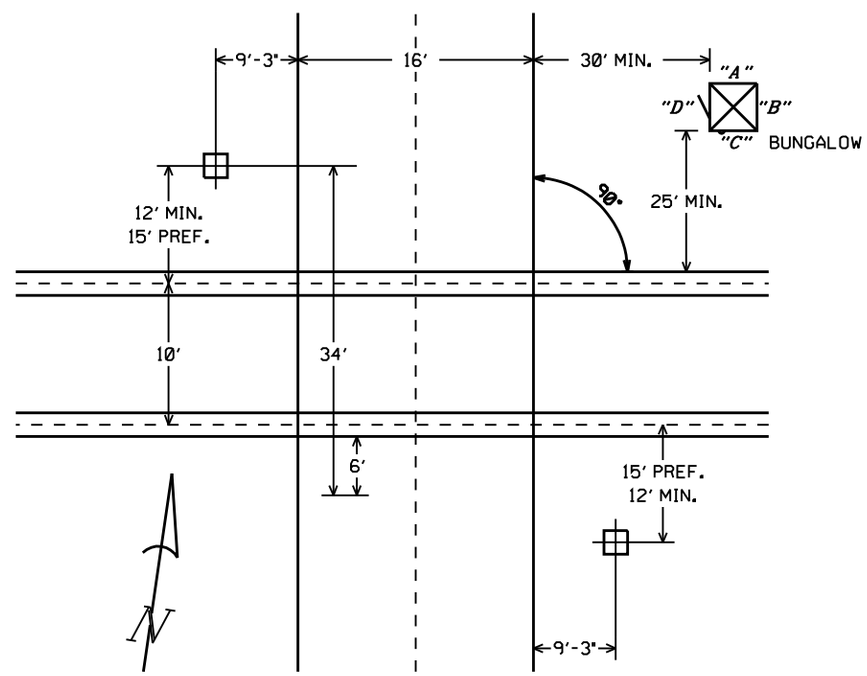

FOUNDATION PLACEMENT SKETCH
NOT TO SCALE

NOTES:

MAIN 1 & 2 EQUIPMENT IS DESIGNED FOR 20 SECONDS MINIMUM WARNING TIME AT 79 MPH.
APPROACHES WERE LENGTHENED 10 SECONDS FOR SPEED VARIANCE AND BALLAST CHANGES (BT).
APPROACHES WERE LENGTHENED 4 SECONDS FOR EQUIPMENT RESPONSE TIME (ERT).
ALL LAMPS TO BE LED
GATE LENGTH SHOWN IS MEASURED FROM MAST C/L TO GATE TIP.

NOTES:

- -TEST TERMINAL
- -EQUALIZER
- -LINE ARRESTER
- -HEAVY DUTY ARRESTER
- -TWISTED WIRE 2 TURNS PER FOOT
- -CONNECTION TO REC./RTU

ALL WIRES #16 AWG UNLESS OTHERWISE NOTED

ALL NEW

DESIGNED 12-14-11
NEW CROSSING MP64.05
RSD7BES SEQ.# 36244

BURLINGTON NORTHERN SANTA FE RAILWAY

CROSSING CIRCUIT PLAN
EAST 21ST STREET LELAND, IL

LS 0001 | MP 64.05 | SH 01 OF 12

RED = IN YELLOW = OUT

PLAN MUST NOT BE MODIFIED WITHOUT APPROVAL OF SIGNAL ENGINEERING COPYRIGHT 2011 BNSF RAILWAY COMPANY. ALL RIGHTS RESERVED.

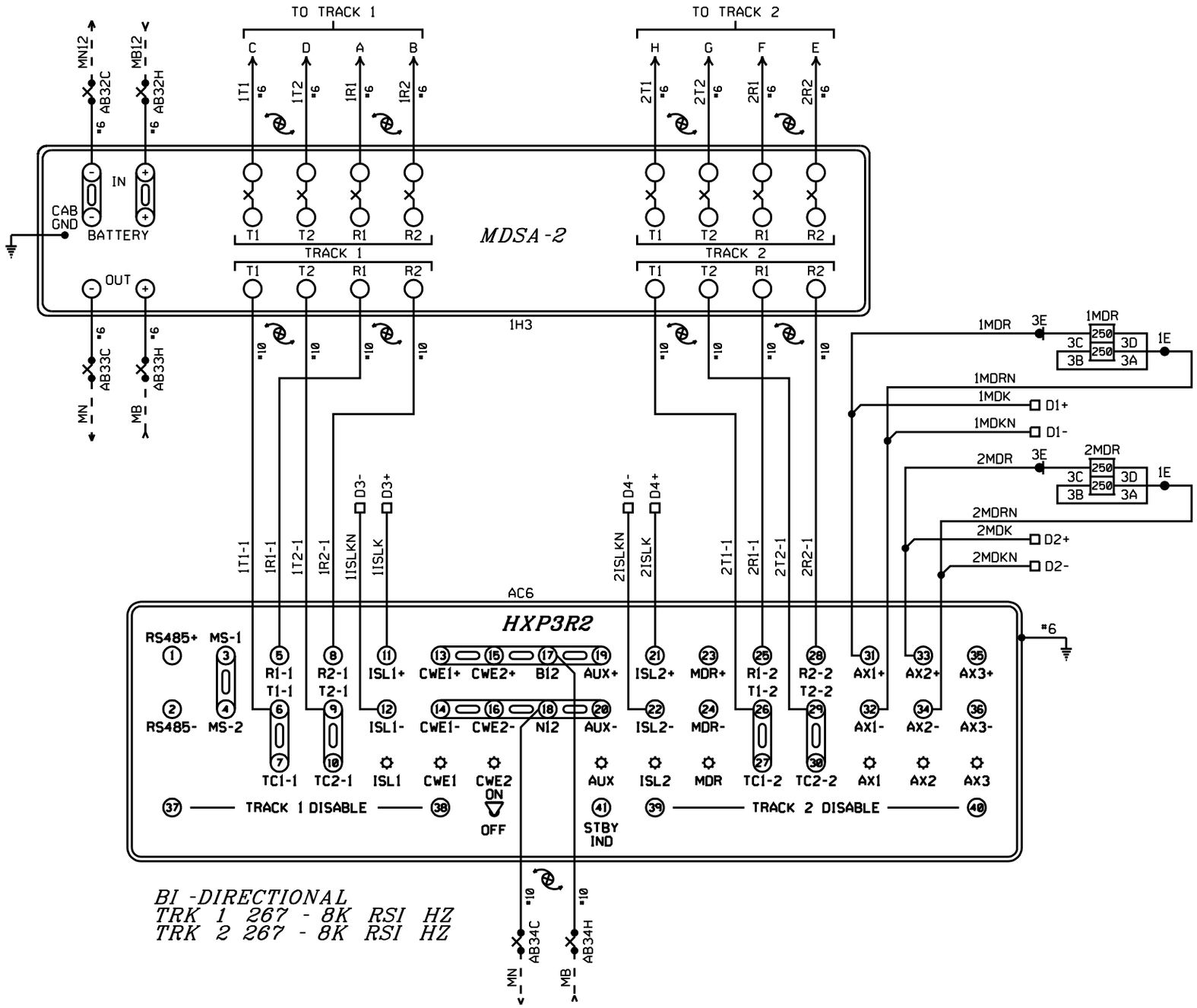

BI -DIRECTIONAL
TRK 1 267 - 8K RSI HZ
TRK 2 267 - 8K RSI HZ

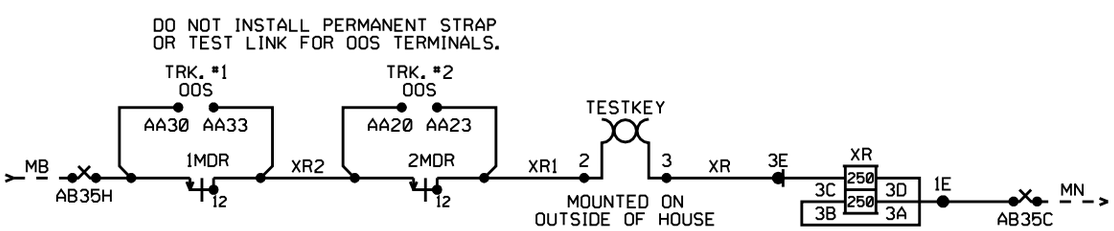

ALL NEW

DESIGNED 12-14-11
NEW CROSSING MP64.05
RSD/BES SEQ.# 36244

BURLINGTON NORTHERN SANTA FE RAILWAY

HXP-3R2 TRACK CIRCUITS
EAST 21ST STREET LELAND, IL

LS 0001 | MP 64.05 | SH 02 OF 12

PLAN MUST NOT BE MODIFIED WITHOUT APPROVAL OF SIGNAL ENGINEERING COPYRIGHT 2011 BNSF RAILWAY COMPANY. ALL RIGHTS RESERVED.

PROGRAM INFORMATION

PROGRAM VERSION 42.0 OR LATER

*=FIELD ADJUSTMENT TO BE MADE ACCORDING TO THE HXP-3 INSTRUCTION MANUAL 100052-001 AD0 & SUPPLEMENTS.

HXP-3R2 ADJUST SELECT ADJUSTMENTS

NO.	ADJUSTMENT NAME	TRACK 1	TRACK 2
1	APPROACH LENGTH	3940'	3940'
2	WARNING TIME	30 SEC.	30 SEC.
3	LIA	*	*
4	TC	*	*
5	MD RESTART	*	*

NOTE:

BEFORE PROGRAMMING ANY PARAMETERS/OPTIONS FOR THE HXP GO TO 'OPTION 49' AND RESET ALL LOCAL PARAMETERS TO FACTORY DEFAULT VALUES. SEE HXP-3 MANUAL 100052-001 AD0 PAGE 4-14.

OPTION ADJUSTMENTS

NO.	ABBREVIATION	TRACK 1	TRACK 2
1	TK-ENA	"UP"	"UP"
2	TK FO	267 HZ	267 HZ
3	CW/MD	"C"	"C"
4	UNI-BI	"b" (BI)	"b" (BI)
5	NBS-C	* RX	* RX
		* FEET	* FEET
6	CWEWT	DL (80 SEC.)	DL (80 SEC.)
7	LOS	DL (16 SEC.)	DL (16 SEC.)
8	IJ-LOS	DL (5 SEC.)	DL (5 SEC.)
9	BC	*	*
10	P-COMP	*	*
11	AX1	SEE AX ADJ.	SEE AX ADJ.
12	AX2	SEE AX ADJ.	SEE AX ADJ.
13	AX3	SEE AX ADJ.	SEE AX ADJ.
17	MDR-AX/OF-TK	0'	0'
	CJ-LOS	DL (0)	DL (0)
	PJ-DET	DL (15 SEC.)	DL (15 SEC.)
	PJ-RX	DL (15)	DL (15)
18	MD-TMR	DL (10 MIN.)	DL (10 MIN.)
19	MIN-WT	DL (0)	DL (0)
20	FS-RX	DL (0)	DL (0)
	FS-TM	DL (10 MIN.)	DL (10 MIN.)
21	POS-RX	DL (0)	DL (0)
	POS-TM	DL (0)	DL (0)
22	AR-RX	DL (0)	DL (0)
	AR-TM	DL (10 MIN.)	DL (10 MIN.)
47	ATO-RX	UP	UP
48	PF-ENA	"dn"	"dn"

AX ADJUSTMENTS

NO.	ABBREVIATION	AX 1	AX 2	AX 3
1	TK-ASN	1	2	2
2	OF-TK1	0'	NA	NA
3	OF-TK2	NA	0'	0'
4	WT	30 SEC.	30 SEC.	99 SEC.
5	MD-RST	(0)	(0)	(0)
6	CW/MD	"C"	"C"	"C"
7	CJ-LOS	DL (0)	DL (0)	DL (0)
8	PJ-DET	DL (15 SEC.)	DL (15 SEC.)	DL (15 SEC.)
9	PJ-RX	DL (15)	DL (15)	DL (15)
10	POS-ST	"dn"	"dn"	"dn"

SWITCH INFORMATION

SWITCH	TRACK 1	TRACK 2
MASTER/SLAVE	MASTER	SLAVE
RSI FAULT JUMPER	0	0
RSI-LOS JUMPER	1	1
TLM W1 JUMPER	PINS 1-2	
TLM W2 JUMPER	PINS 1-2	
TLM W3 JUMPER	PINS 1-2	
MINUTE TIMEOUT	5 MIN	
CW/MD	CW	
STANDBY/AUTO/NORMAL	AUTO	

NOTES: DL= DEFAULT LEVEL
NA= NON APPLICABLE

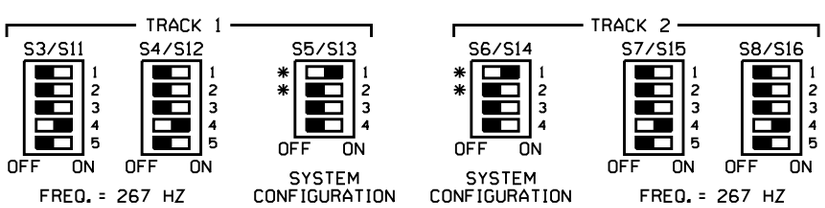

NOTES: FOR S5/S13 AND S6/S14

*1.) ACTUATOR 1 SELECTS NORMAL APPROACH WHEN SET TO ON POSITION.

*2.) WITH ACTUATOR 1 IN OFF POSITION ACTUATOR 2 SELECTS SHORT APPROACH WHEN OFF AND SELECTS VERY SHORT WHEN ON.

3.) ACTUATOR 3 OFF SELECTS HXP OPERATION.

4.) ACTUATOR 4 OFF = NORMAL MUX TABLE
ACTUATOR 4 ON = ALTERNATE MUX TABLE

ALL NEW

DESIGNED 12-14-11
NEW CROSSING MP64.05
RSD/BES SEQ.# 36244

BURLINGTON NORTHERN SANTA FE RAILWAY

HXP-3R2 PROGRAM INFORMATION
EAST 21ST STREET LELAND, IL

LS 0001 | MP 64.05 | SH 03 OF 12

PLAN MUST NOT BE MODIFIED WITHOUT APPROVAL OF SIGNAL ENGINEERING COPYRIGHT 2011 BNSF RAILWAY COMPANY. ALL RIGHTS RESERVED.

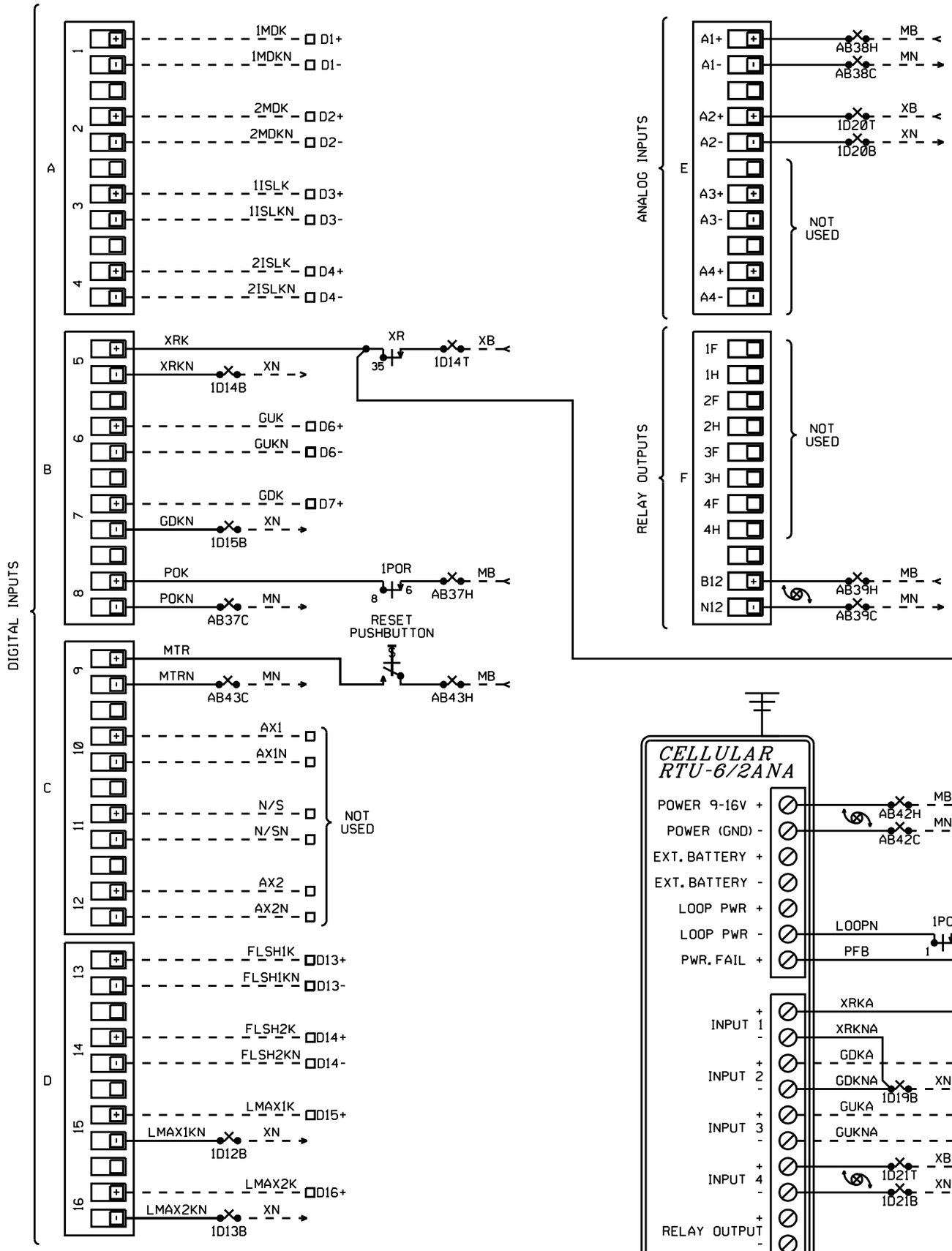

BNSF STANDARD CONFIGURATION 32

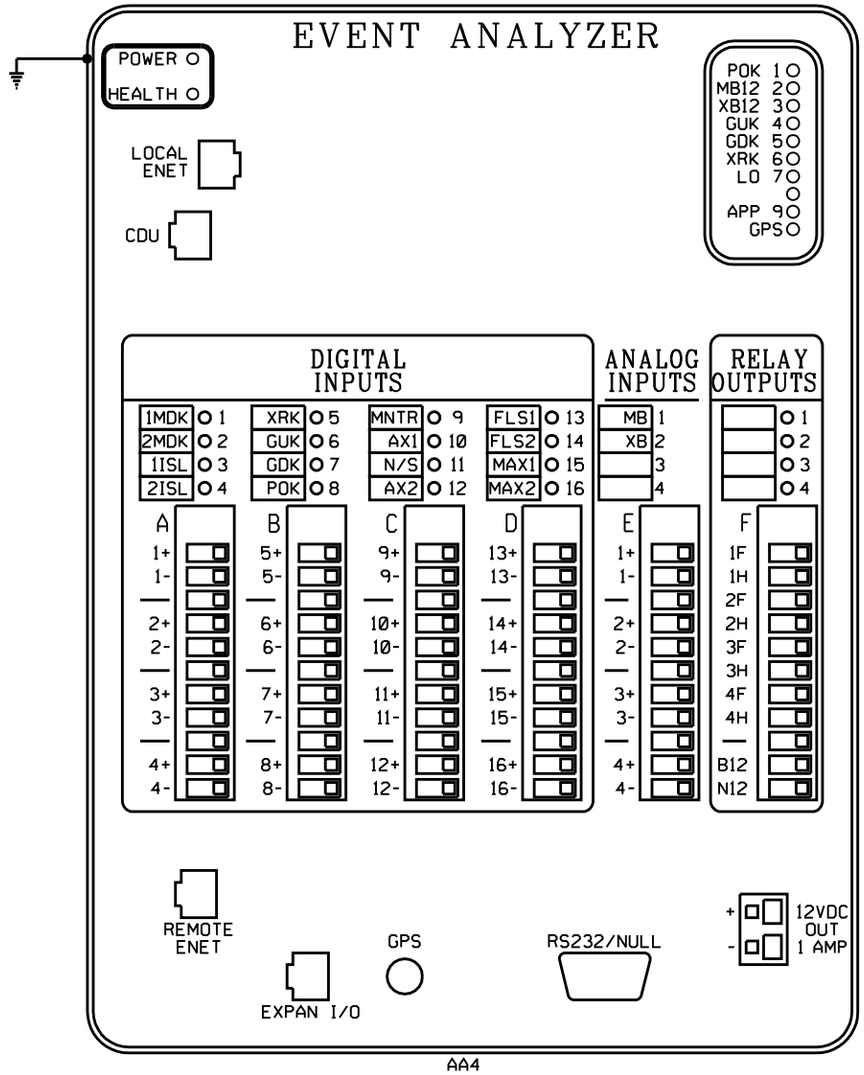

BNSF 1.0 APPLICATION CONFIGURATION INFORMATION DIGITAL INPUTS

INPUT NO.	INPUT DESCRIPTIVE NAME	ID
1	MOTION DETECTOR #1	1MDK
2	MOTION DETECTOR #2	2MDK
3	ISLAND #1	1ISLK
4	ISLAND #2	2ISLK
5	CROSSING RELAY	XRK
6	GATES UP	GUK
7	GATES DOWN	GDK
8	AC POWER	POK
9	MAINTAINER SWITCH	MTR
10	AUX INPUT 1	AX1
11	NORMAL/STANDBY	N/S
12	AUX INPUT 2	AX2
13	FLASHING LIGHTS 1	FLSH1
14	FLASHING LIGHTS 2	FLSH2
15	LOD MAX INPUT 1	LMAX1
16	LOD MAX INPUT 2	LMAX2

ALL NEW

DESIGNED 12-14-11
NEW CROSSING MP64.05
RSD/BES SEQ.# 36244

BURLINGTON NORTHERN SANTA FE RAILWAY

RECORDER CIRCUITS
EAST 21ST STREET LELAND, IL

LS 0001 | MP 64.05 | SH 04 OF 12

PLAN MUST NOT BE MODIFIED WITHOUT APPROVAL OF SIGNAL ENGINEERING COPYRIGHT 2011 BNSF RAILWAY COMPANY. ALL RIGHTS RESERVED.

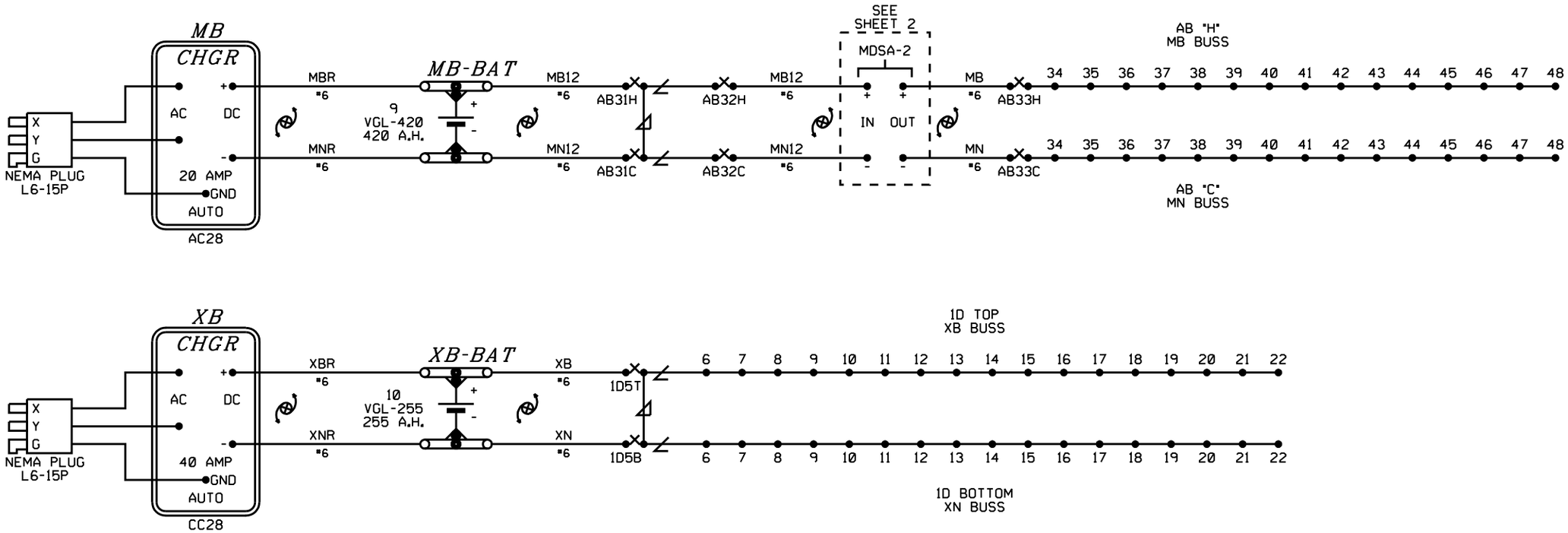

ALL NEW

BURLINGTON NORTHERN SANTA FE RAILWAY

BATTERY CIRCUITS
EAST 21ST STREET LELAND, IL

DESIGNED 12-14-11
NEW CROSSING MP64.05
RSD/BES SEQ.# 36244

LS 0001 | MP 64.05 | SH 05 OF 12

PLAN MUST NOT BE MODIFIED WITHOUT APPROVAL OF SIGNAL ENGINEERING COPYRIGHT 2011 BNSF RAILWAY COMPANY. ALL RIGHTS RESERVED.

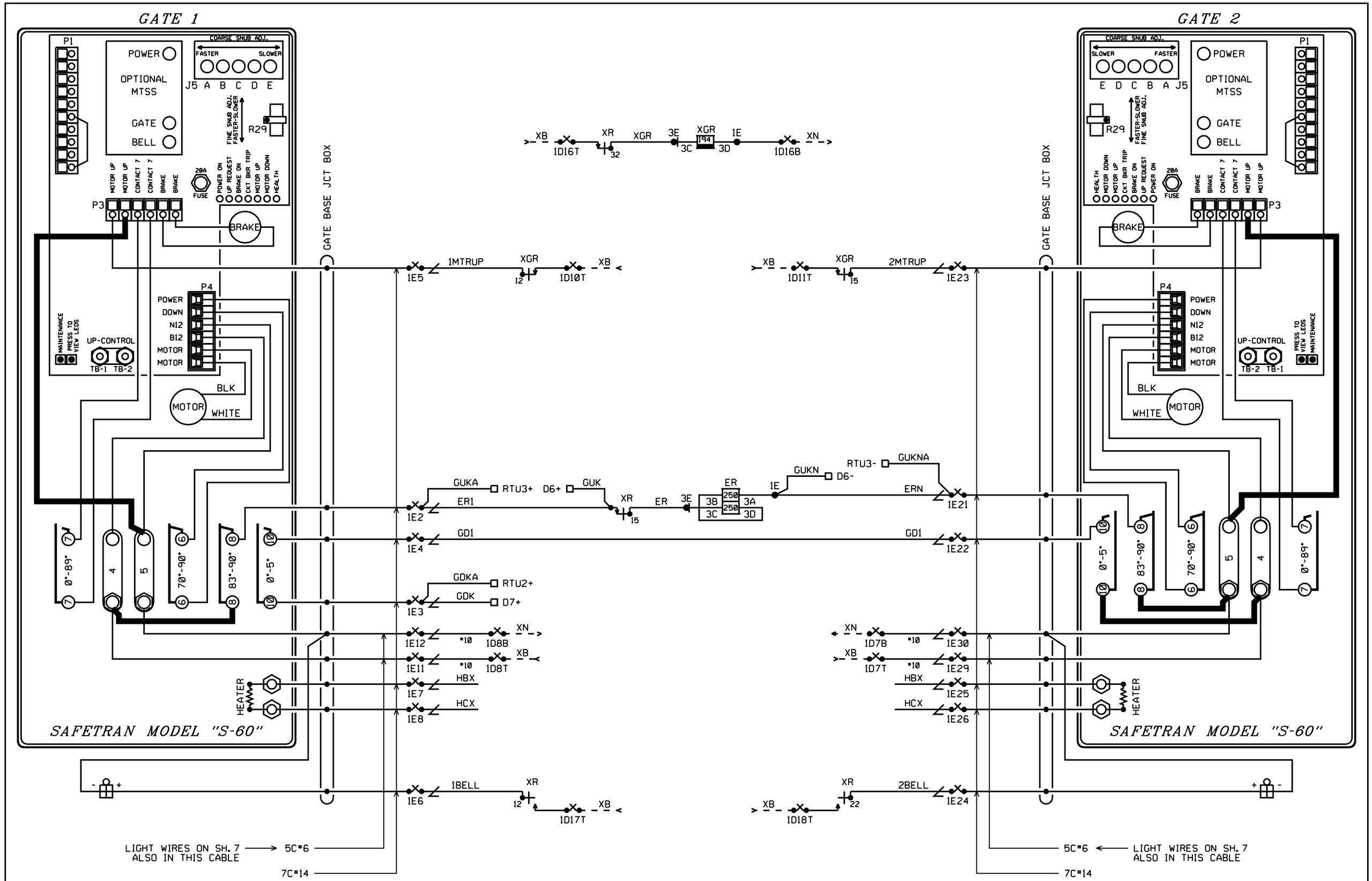

NOTES:

1. ADD JUMPERS IN GATE SHOWN IN BOLD.
2. MAXIMUM WIRE SIZE FOR TERMINAL 5 TO MOTOR UP CONTROL (-) IS #12 AWG.

ALL NEW

DESIGNED 12-14-11
NEW CROSSING MP64.05
RSD/BES SEQ.# 36244

BURLINGTON NORTHERN SANTA FE RAILWAY

GATE CIRCUIT PLAN
EAST 21ST STREET LELAND, IL

LS 0001 | MP 64.05 | SH 06 OF 12

PLAN MUST NOT BE MODIFIED WITHOUT APPROVAL OF SIGNAL ENGINEERING COPYRIGHT 2011 BNSF RAILWAY COMPANY. ALL RIGHTS RESERVED.

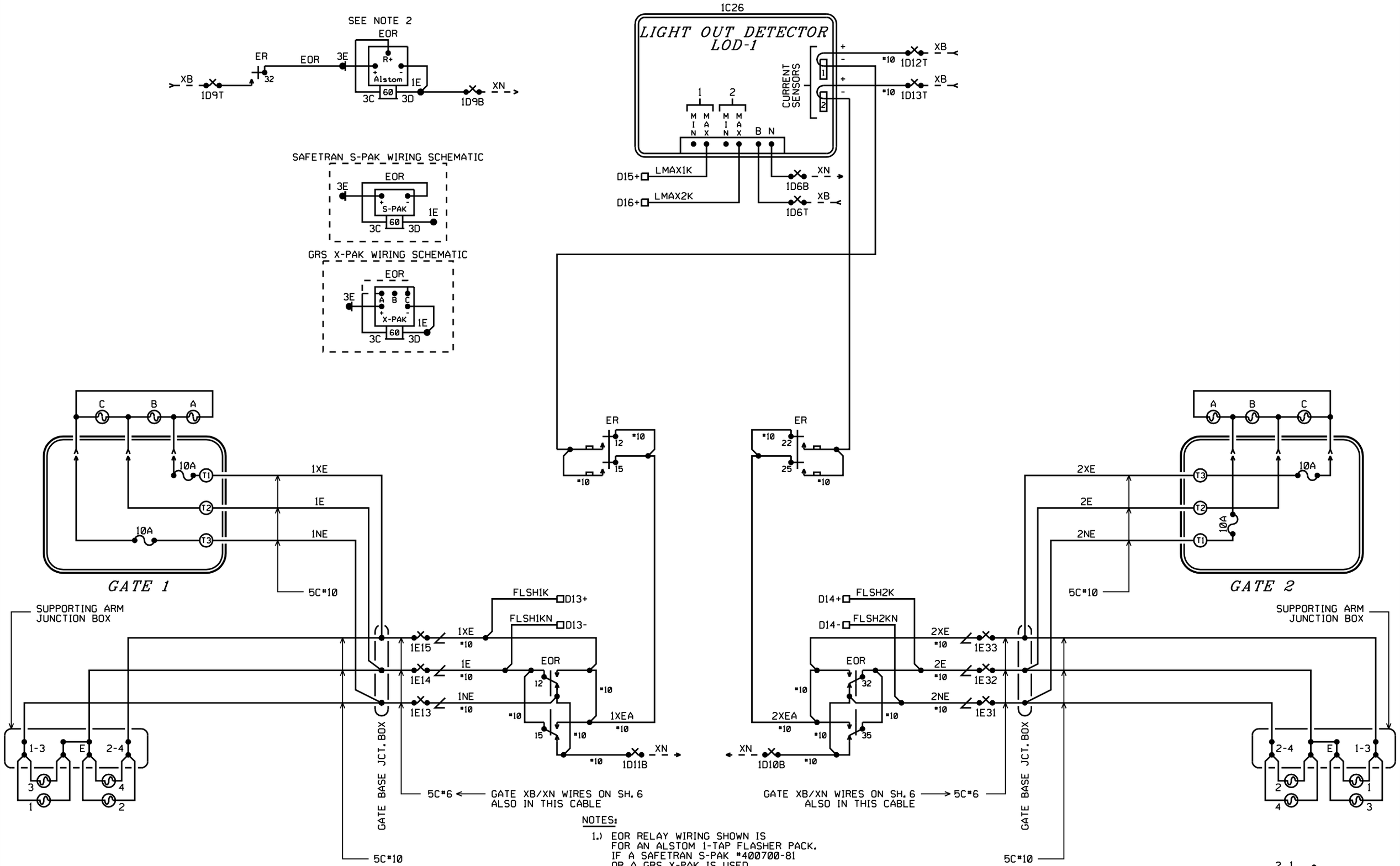

NOTES:

1.) EOR RELAY WIRING SHOWN IS FOR AN ALSTOM 1-TAP FLASHER PACK. IF A SAFETRAN S-PAK #400700-81 OR A GRS X-PAK IS USED, CONSULT THE INSERT FOR PROPER WIRING.

2.) (ALSTOM) WHEN EOR RELAY WITH 60 OHM COIL RESISTANCE IS USED ALSTOM PART #30733-003-02 SHOULD BE USED. IF 18 OHM COILS ARE USED ALSTOM PART #30733-003-04 SHOULD BE USED.

3.) (X-PAK) WHEN EOR RELAY WITH 60 OHM COIL RESISTANCE IS USED CONNECT JUMPER FROM 3C TO "A". IF 18 OHM COILS ARE USED CONNECT JUMPER FROM 3C TO "C".

4.) (S-PAK) DO NOT USE S-PAK WITH 18 OHM COILS

ALL NEW

DESIGNED 12-14-11
NEW CROSSING MP64.05
RSD/BES SEQ.# 36244

BURLINGTON NORTHERN SANTA FE RAILWAY

FLASHER CIRCUIT PLAN
EAST 21ST STREET LELAND, IL

LS 0001	MP 64.05	SH 07 OF 12

PLAN MUST NOT BE MODIFIED WITHOUT APPROVAL OF SIGNAL ENGINEERING

COPYRIGHT 2011 BNSF RAILWAY COMPANY. ALL RIGHTS RESERVED.

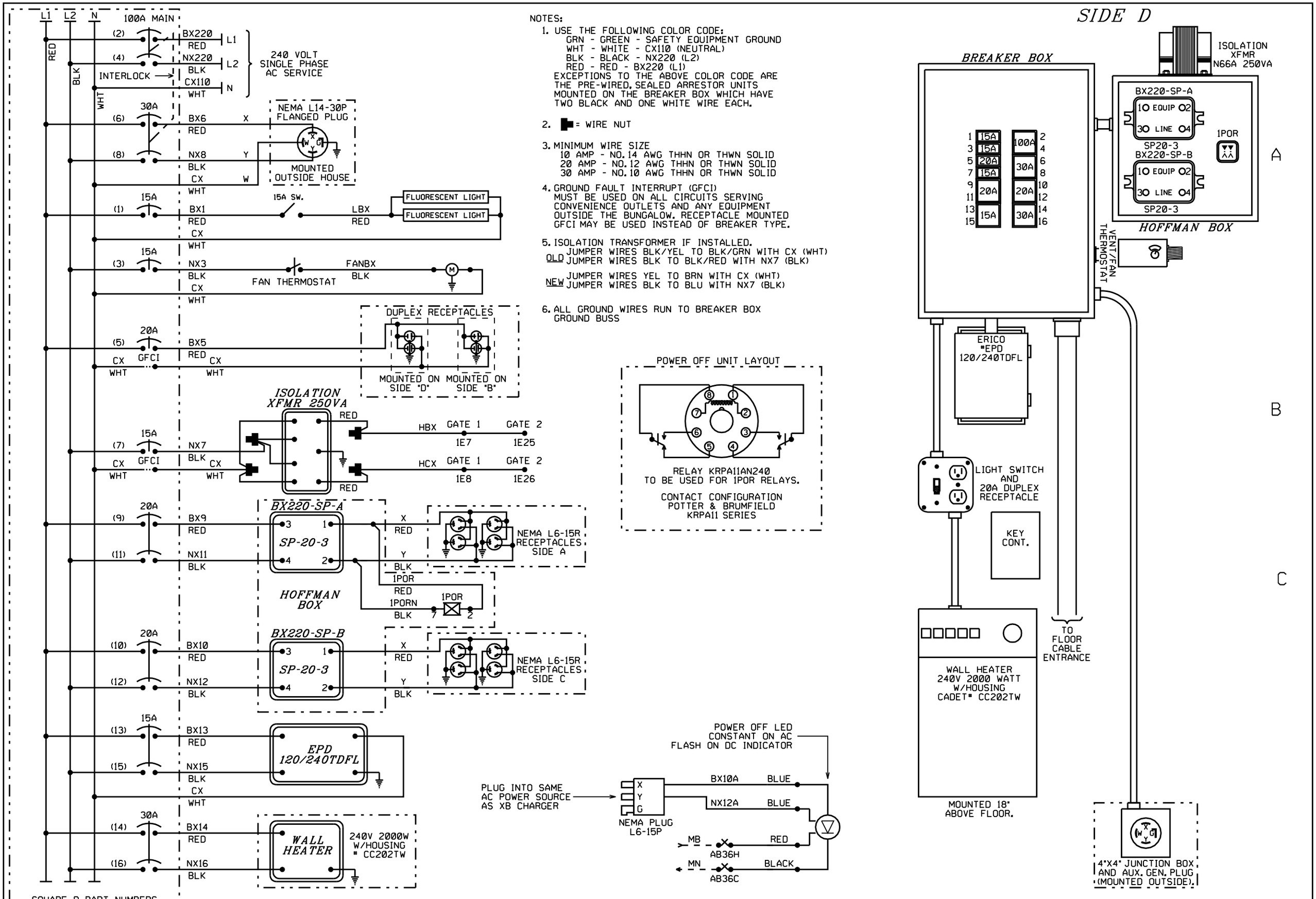

ALL NEW

DESIGNED 12-14-11
NEW CROSSING MP64.05
RSD7BES SEQ.# 36244

BURLINGTON NORTHERN SANTA FE RAILWAY

POWER DISTRIBUTION
EAST 21ST STREET LELAND, IL

LS 0001	MP 64.05	SH 08 OF 12

PLAN MUST NOT BE MODIFIED WITHOUT APPROVAL OF SIGNAL ENGINEERING COPYRIGHT 2011 BNSF RAILWAY COMPANY. ALL RIGHTS RESERVED.

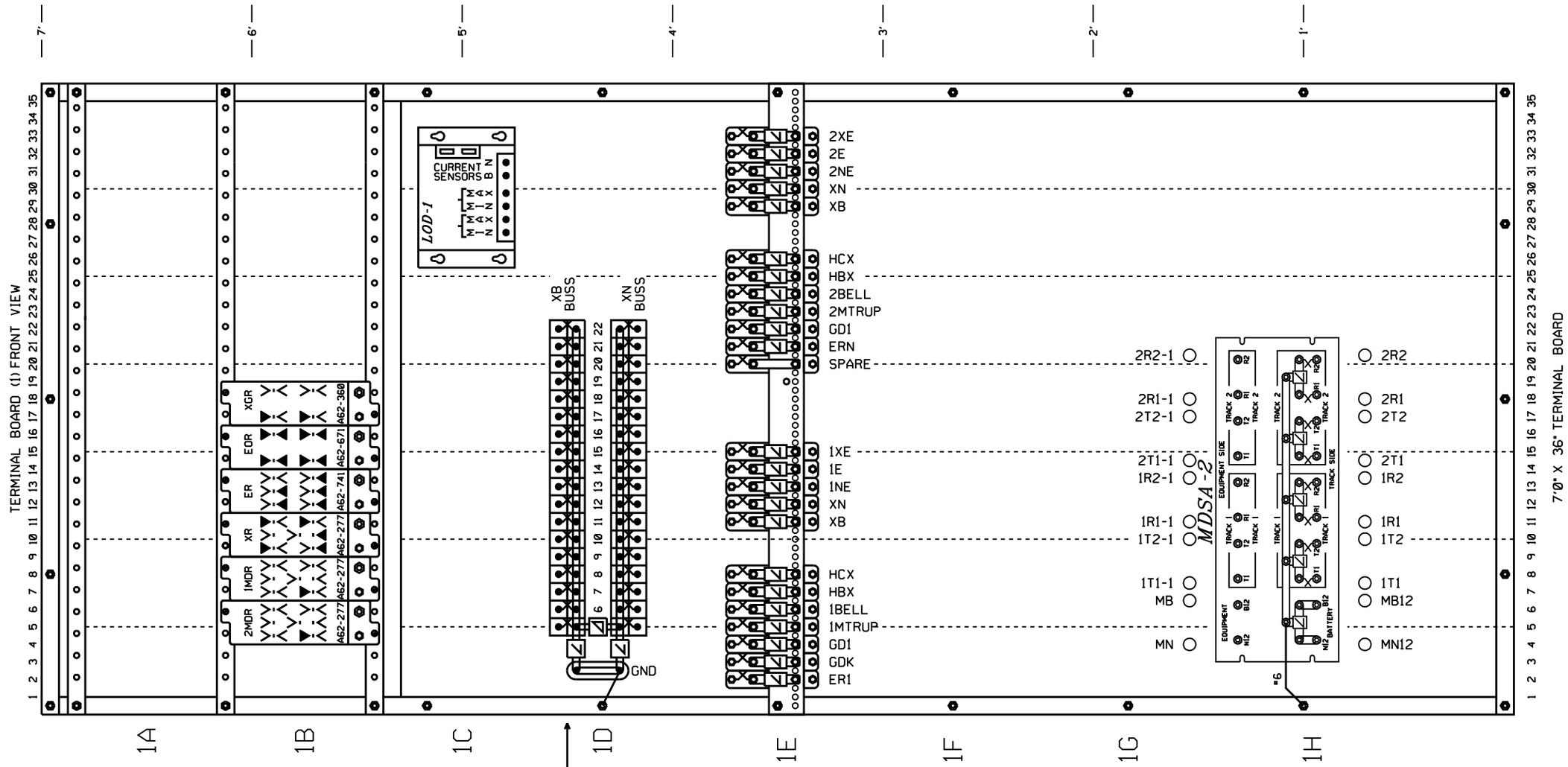

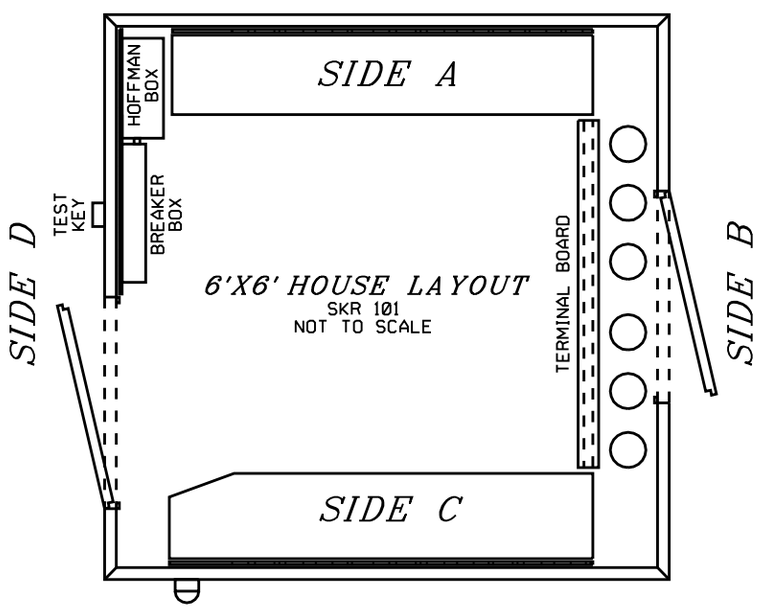

NOTE: INSTALL POWER OFF INDICATOR LIGHT ON TRACK SIDE NEAREST THE HIGHWAY AND NEAR EAVE OF HOUSE.

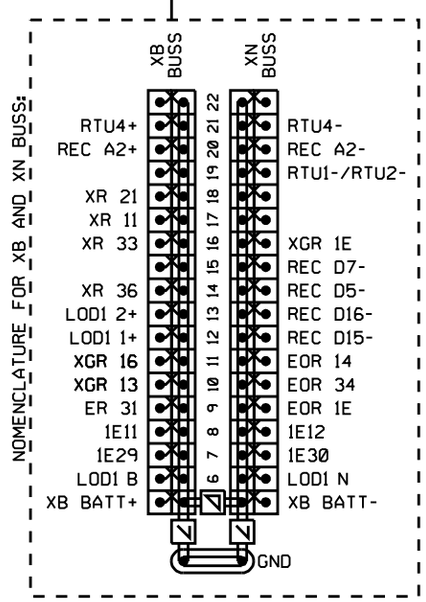

RELAY CROSS REFERENCE

GRS	SAFETRAN
A62-277	400004
A62-741	400005
A62-671	400700
A62-360	400200

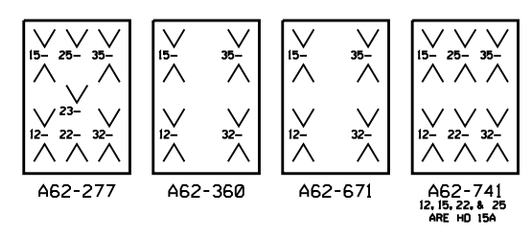

ALL NEW

DESIGNED 12-14-11
NEW CROSSING MP64.05
RSD/BES SEQ.# 36244

BURLINGTON NORTHERN SANTA FE RAILWAY

TERMINAL BOARD LAYOUT
EAST 21ST STREET LELAND, IL

LS 0001 | MP 64.05 | SH 09 OF 12

PLAN MUST NOT BE MODIFIED WITHOUT APPROVAL OF SIGNAL ENGINEERING COPYRIGHT 2011 BNSF RAILWAY COMPANY. ALL RIGHTS RESERVED.

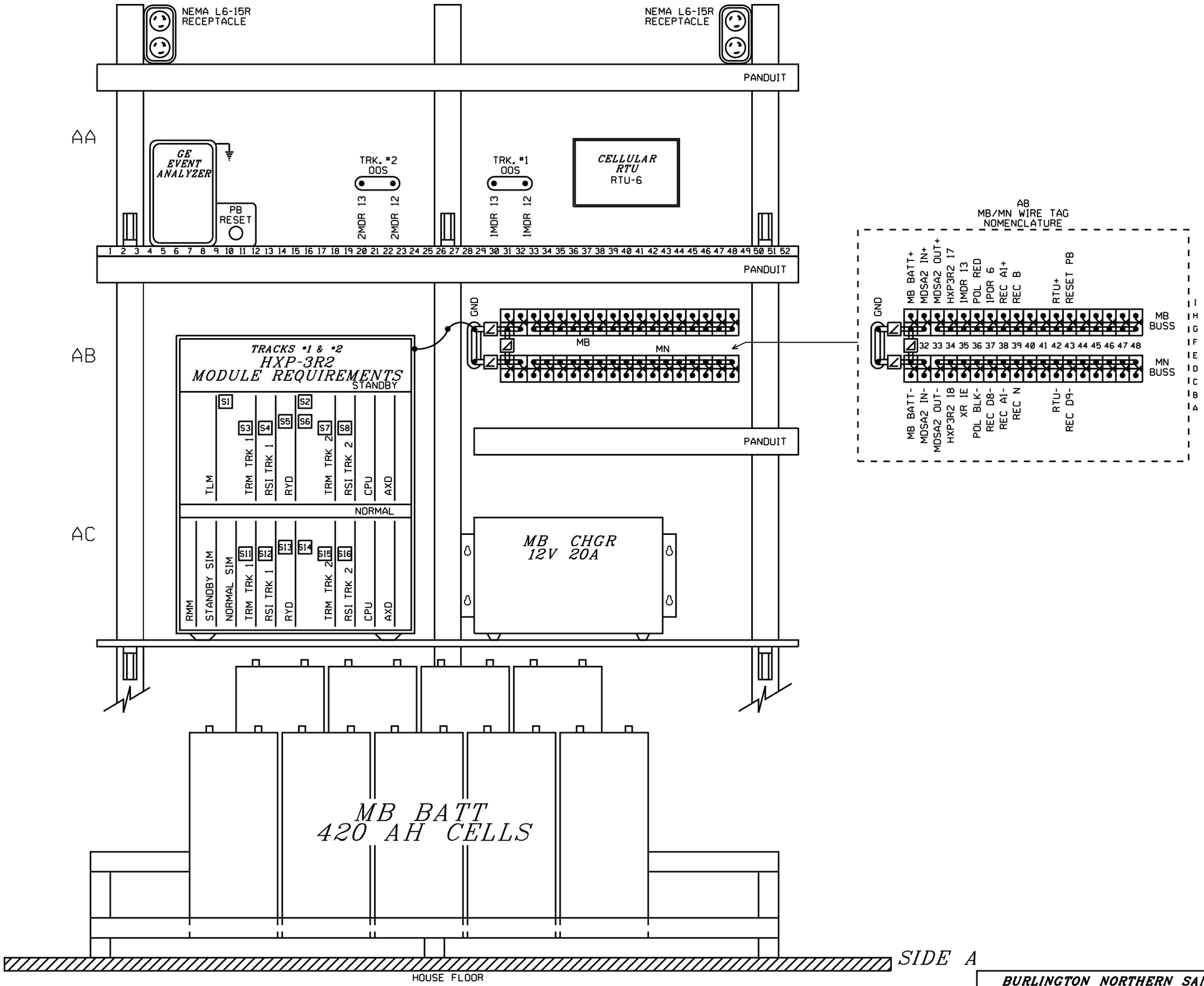

ALL NEW

DESIGNED 12-14-11
NEW CROSSING MP64.05
RSD/BES SEQ.# 36244

BURLINGTON NORTHERN SANTA FE RAILWAY

SIDE "A" SHELF LAYOUT
EAST 21ST STREET LELAND, IL

LS 0001	MP 64.05	SH 10 OF 12

PLAN MUST NOT BE MODIFIED WITHOUT APPROVAL OF SIGNAL ENGINEERING COPYRIGHT 2011 BNSF RAILWAY COMPANY. ALL RIGHTS RESERVED.

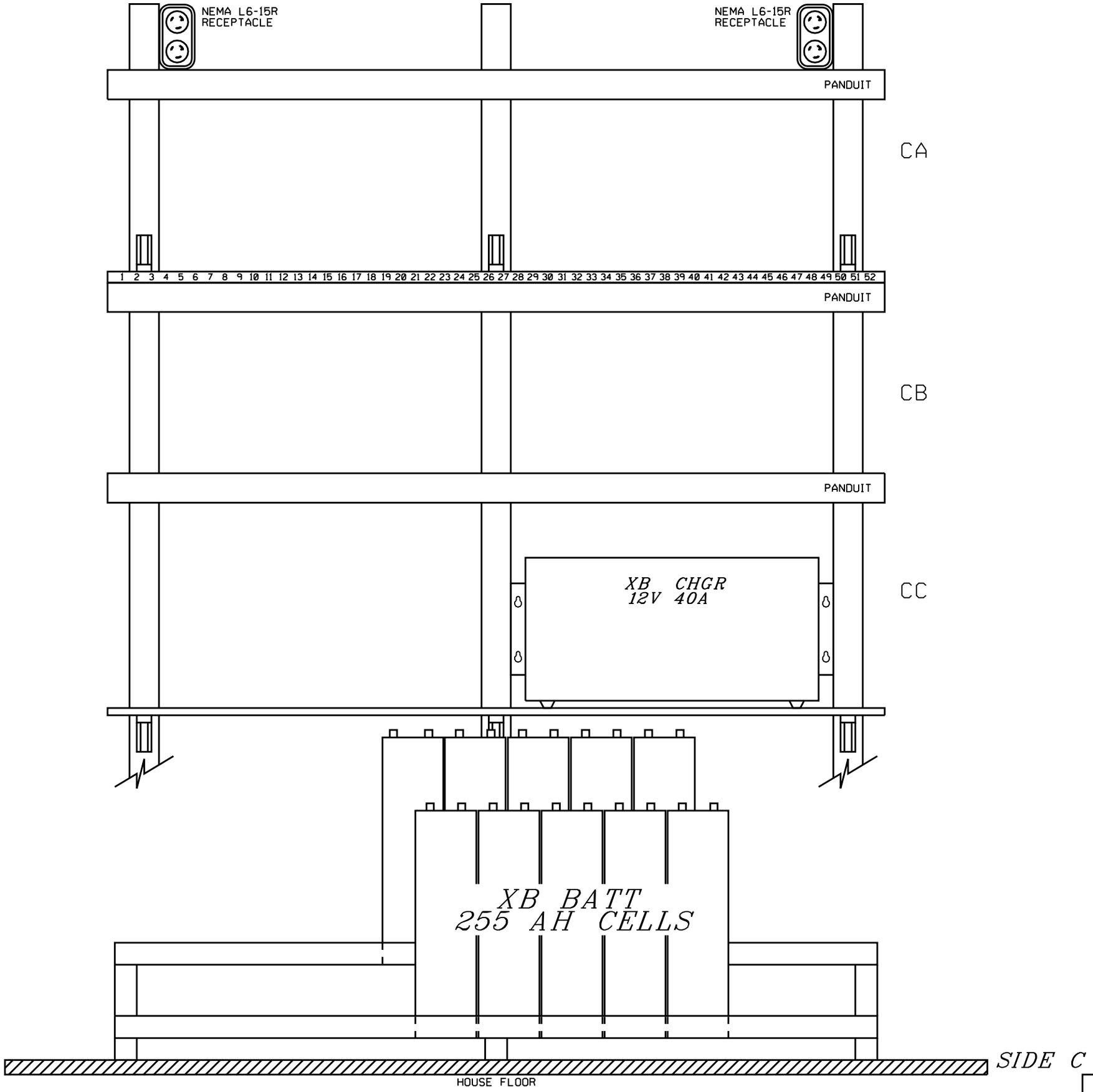

ALL NEW

DESIGNED 12-14-11
NEW CROSSING MP64.05
RSD/BES SEQ.# 36244

BURLINGTON NORTHERN SANTA FE RAILWAY

SIDE "C" SHELF LAYOUT
EAST 21ST STREET LELAND, IL

LS 0001 | MP 64.05 | SH 11 OF 12

PLAN MUST NOT BE MODIFIED WITHOUT APPROVAL OF SIGNAL ENGINEERING COPYRIGHT 2011 BNSF RAILWAY COMPANY. ALL RIGHTS RESERVED.

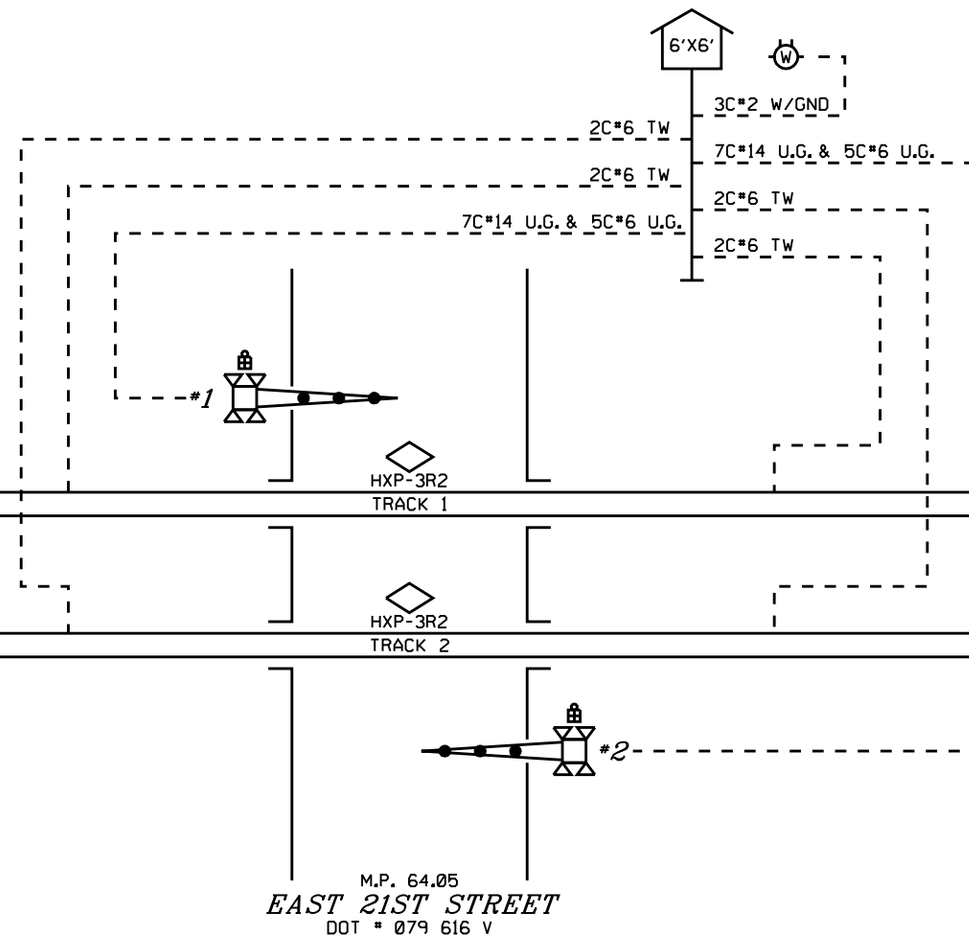

ALL NEW

DESIGNED 12-14-11
NEW CROSSING MP64.05
RSD7BES SEQ.# 36244

BURLINGTON NORTHERN SANTA FE RAILWAY

CABLE LAYOUT
EAST 21ST STREET LELAND, IL

LS 0001 | MP 64.05 | SH 12 OF 12