PLAN MUST NOT BE MODIFIED WITHOUT APPROVAL OF SIGNAL ENGINEERING

COPYRIGHT 2012 BNSF RAILWAY COMPANY. ALL RIGHTS RESERVED.

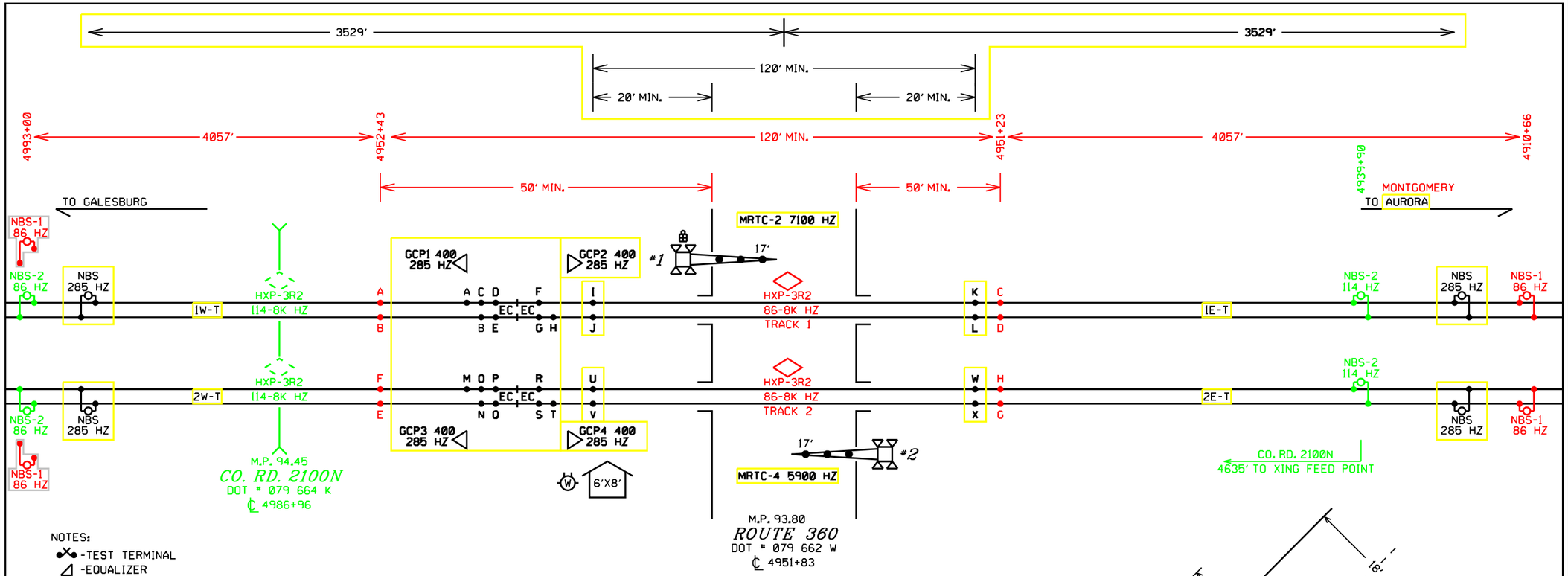

NOTES:

- -TEST TERMINAL
- -EQUALIZER
- -LINE ARRESTER
- -HEAVY DUTY ARRESTER
- -TWISTED WIRE 2 TURNS PER FOOT
- -CONNECTION TO REC./RTU
- [1] -HEAVY DUTY EQUALIZER 700-1 SAFETRAN
- [2] -HEAVY DUTY ARRESTOR 615-2 SAFETRAN
- [3] -POWER PROTECTOR 701-1 SAFETRAN
- [4] -CLARVIEW ARRESTOR 022485-31X SAFETRAN

(1) ALL WIRES #16 AWG UNLESS OTHERWISE NOTED

FIELD VERIFY ALL DISTANCES AND CLEARANCE ADJUST WARNING TIME ACCORDINGLY

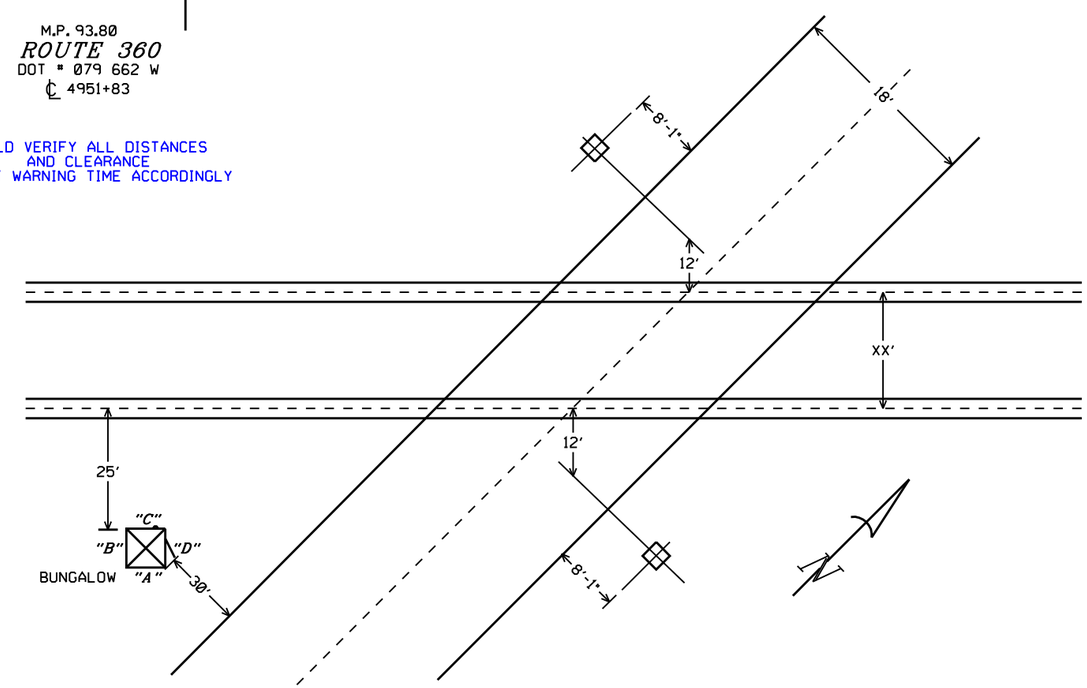

FOUNDATION PLACEMENT SKETCH
NOT TO SCALE

NOTES:

EQUIPMENT IS DESIGNED FOR 20 SECONDS MINIMUM WARNING TIME AT 79 MPH.
APPROACHES WERE LENGTHENED 1 SECOND(S) FOR WIDE OR ANGLED CROSSING (CT).
APPROACHES WERE LENGTHENED 0 SECOND(S) FOR ADDITIONAL GATE DELAY.
APPROACHES WERE LENGTHENED 10 SECONDS FOR SPEED VARIANCE AND BALLAST CHANGES (BT).
APPROACHES WERE LENGTHENED 0 SECONDS FOR SIMULTANEOUS PREEMPTION.
APPROACHES WERE LENGTHENED 4 SECONDS FOR EQUIPMENT RESPONSE TIME (ERT).
GATE LAMPS TO BE 10V-18W OR LED. ALL OTHER LAMPS TO BE 10V-25W OR LED
ALL FRONT LENS TO BE 30°-15° OR LED
ALL BACK LENS TO BE 70° OR LED

BURLINGTON NORTHERN SANTA FE RAILWAY

CROSSING CIRCUIT PLAN
ROUTE 360 ARLINGTON, ILL.

REDRAWN 3-8-04 RSD/RCP	PLACED IN METER 12/02/04 JEB/SLH					DESIGNED 01-09-12 NEW XING AT MP 94.45 TCS/JML SEQ.# 47406	DESIGNED 02-21-11 DESIGNED 01-14-10 MENDOTA ETMS RSS/BNSF SEQ.# 42222	LS 0001	MP 93.80	SH 01 OF 14

0001093_80x01c_.dgn January 09, 2012

GREEN = IN | GREY = OUT | RED = IN | YELLOW = OUT

PLAN MUST NOT BE MODIFIED WITHOUT APPROVAL OF SIGNAL ENGINEERING COPYRIGHT 2012 BNSF RAILWAY COMPANY. ALL RIGHTS RESERVED.

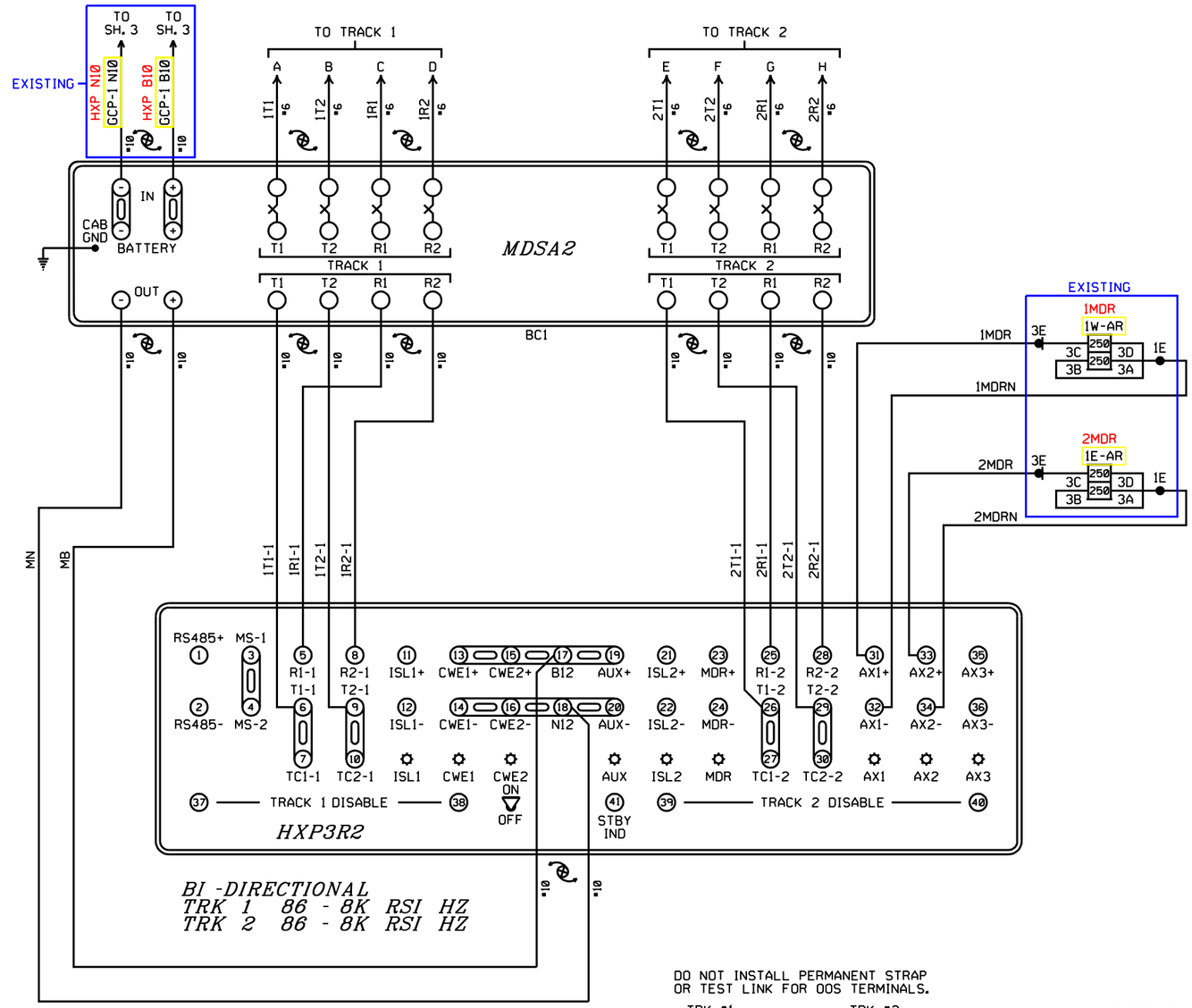

DO NOT INSTALL PERMANENT STRAP OR TEST LINK FOR OOS TERMINALS.

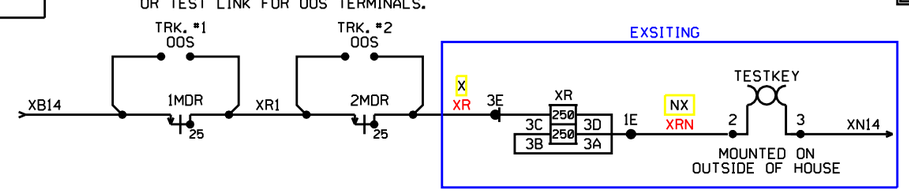

NOTE:

BEFORE PROGRAMMING ANY PARAMETERS/OPTIONS FOR THE HXP GO TO 'OPTION 49' AND RESET ALL LOCAL PARAMETERS TO FACTORY DEFAULT VALUES. SEE HXP-3 MANUAL 100052-001 AD0 PAGE 4-14.

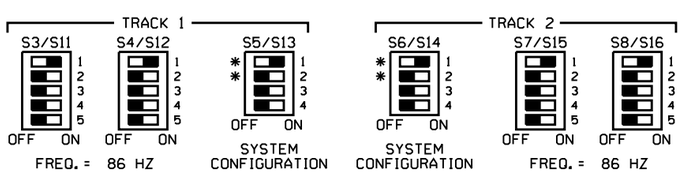

NOTES: FOR S5/S13 AND S6/S14

*1.) ACTUATOR 1 SELECTS NORMAL APPROACH WHEN SET TO ON POSITION.

*2.) WITH ACTUATOR 1 IN OFF POSITION ACTUATOR 2 SELECTS SHORT APPROACH WHEN OFF AND SELECTS VERY SHORT WHEN ON.

3.) ACTUATOR 3 OFF SELECTS HXP OPERATION.

4.) ACTUATOR 4 OFF = NORMAL MUX TABLE
ACTUATOR 4 ON = ALTERNATE MUX TABLE

ALL NEW

DESIGNED 02-21-11

DESIGNED 01-14-10
MENDOTA ETMS
RSS/BNSF SEQ.# 42222

PROGRAM INFORMATION

PROGRAM VERSION 42.0 OR LATER

*=FIELD ADJUSTMENT TO BE MADE ACCORDING TO THE HXP-3 INSTRUCTION MANUAL 100052-001 AD0 & SUPPLEMENTS.

HXP-3R2 ADJUST SELECT ADJUSTMENTS

NO.	ADJUSTMENT NAME	TRACK 1	TRACK 2
1	APPROACH LENGTH	4057'	4057'
2	WARNING TIME	31 SEC.	31 SEC.
3	LIA	*	*
4	TC	*	*
5	MD RESTART	*	*

OPTION ADJUSTMENTS

NO.	ABBREVIATION	TRACK 1	TRACK 2
1	TK-ENA	"UP"	"UP"
2	TK FO	86 HZ	86 HZ
3	CW/MD	"C"	"C"
4	UNI-BI	"b" (BI)	"b" (BI)
5	NBS-C	* RX	* RX
		* FEET	* FEET
6	CWEWT	DL (80 SEC.)	DL (80 SEC.)
7	LOS	DL (16 SEC.)	DL (16 SEC.)
8	IJ-LOS	DL (5 SEC.)	DL (5 SEC.)
9	BC	*	*
10	P-COMP	*	*
11	AX1	SEE AX ADJ.	SEE AX ADJ.
12	AX2	SEE AX ADJ.	SEE AX ADJ.
13	AX3	SEE AX ADJ.	SEE AX ADJ.
17	MDR-AX/OF-TK	0'	0'
	CJ-LOS	DL (0)	DL (0)
	PJ-DET	DL (15 SEC.)	DL (15 SEC.)
	PJ-RX	DL (15)	DL (15)
18	MD-TMR	DL (10 MIN.)	DL (10 MIN.)
19	MIN-WT	DL (0)	DL (0)
20	FS-RX	DL (0)	DL (0)
	FS-TM	DL (10 MIN.)	DL (10 MIN.)
21	POS-RX	DL (0)	DL (0)
	POS-TM	DL (0)	DL (0)
22	AR-RX	DL (0)	DL (0)
	AR-TM	DL (10 MIN.)	DL (10 MIN.)
47	ATO-RX	UP	UP
48	PF-ENA	"dn"	"dn"

AX ADJUSTMENTS

NO.	ABBREVIATION	AX 1	AX 2	AX 3
1	TK-ASN	1	2	2
2	OF-TK1	0'	NA	NA
3	OF-TK2	NA	0'	0'
4	WT	31 SEC.	31 SEC.	31 SEC.
5	MD-RST	* (0)	* (0)	* (0)
6	CW/MD	"C"	"C"	"C"
7	CJ-LOS	DL (0)	DL (0)	DL (0)
8	PJ-DET	DL (15 SEC.)	DL (15 SEC.)	DL (15 SEC.)
9	PJ-RX	DL (15)	DL (15)	DL (15)
10	POS-ST	"dn"	"dn"	"dn"

SWITCH INFORMATION

SWITCH	TRACK 1	TRACK 2
MASTER/SLAVE	MASTER	SLAVE
RSI FAULT JUMPER	0	0
RSI-LOS JUMPER	1	1
TLM W1 JUMPER	PINS 1-2	
TLM W2 JUMPER	PINS 1-2	
TLM W3 JUMPER	PINS 1-2	
MINUTE TIMEOUT	5 MIN	
CW/MD	CW	
STANDBY/AUTO/NORMAL	AUTO	

NOTES: DL= DEFAULT LEVEL
NA= NON APPLICABLE

FIELD VERIFY ALL DISTANCES AND ADJUST UNIT ACCORDINGLY

BURLINGTON NORTHERN SANTA FE RAILWAY

HXP-3R2 TRACK CIRCUITS
ROUTE 360 ARLINGTON, ILL.

LS 0001 MP 93.80 SH 02 OF 10

PLAN MUST NOT BE MODIFIED WITHOUT APPROVAL OF SIGNAL ENGINEERING COPYRIGHT 2012 BNSF RAILWAY COMPANY. ALL RIGHTS RESERVED.

TRACK 1

ELECTROCODE REPEATER-1
MODEL RD-II

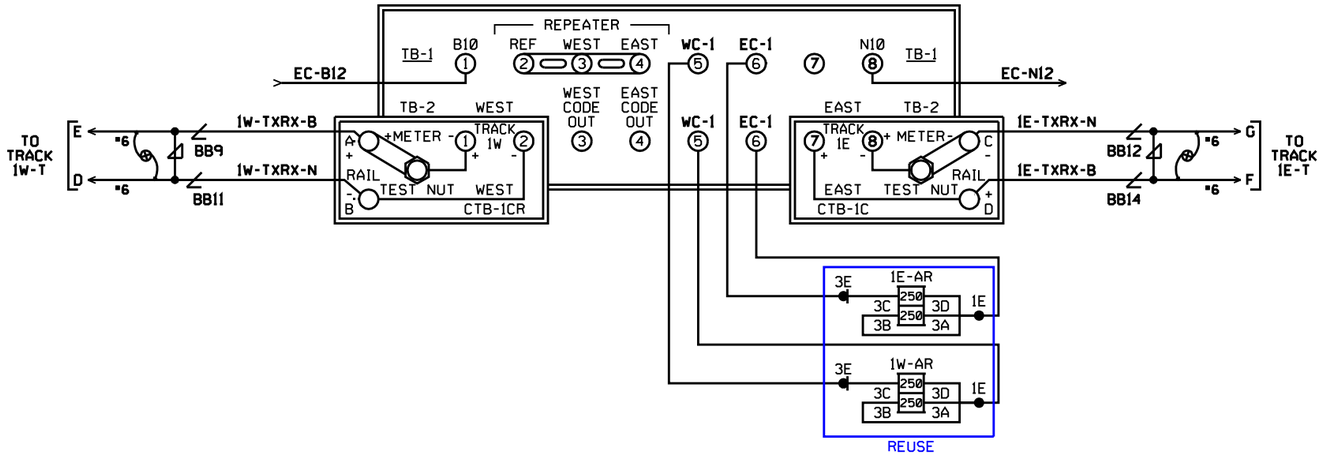

TRACK 2

ELECTROCODE REPEATER-2
MODEL RD-II

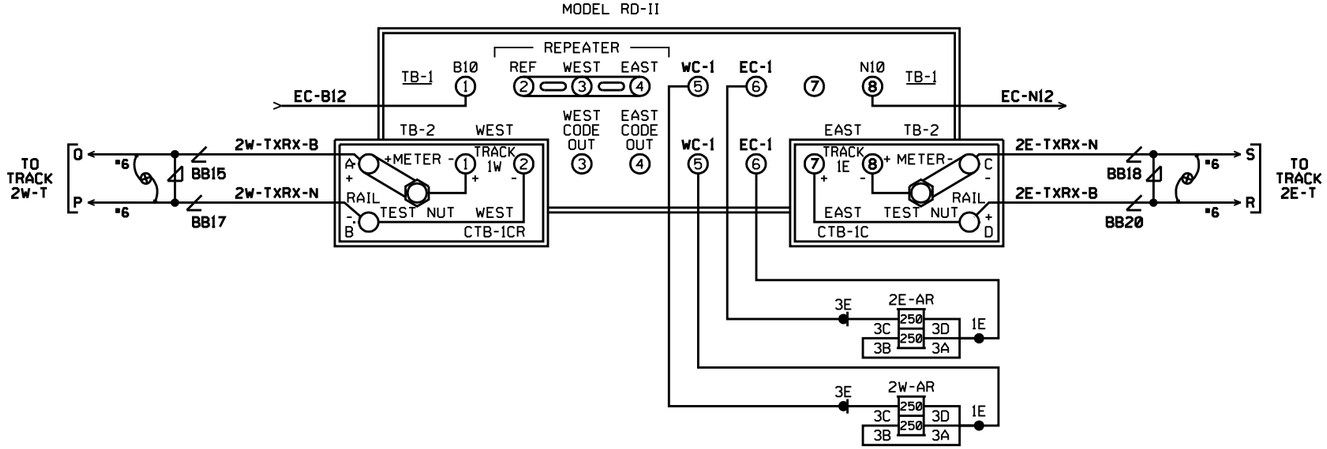

ALL OUT

BURLINGTON NORTHERN SANTA FE RAILWAY

ELECTROCODE REPEATER CIRCUITS
ROUTE 360 ARLINGTON, ILL.

REDRAWN 3-8-04 RSD/RCP							DESIGNED 01-14-10 MENDOTA ETMS RSS/BNSF SEQ.# 42222	LS 0001	MP 93.80	SH 2T OF 14

0001093_80x02t_.dgn January 09, 2012 RED = IN YELLOW = OUT

PLAN MUST NOT BE MODIFIED WITHOUT APPROVAL OF SIGNAL ENGINEERING COPYRIGHT 2012 BNSF RAILWAY COMPANY. ALL RIGHTS RESERVED.

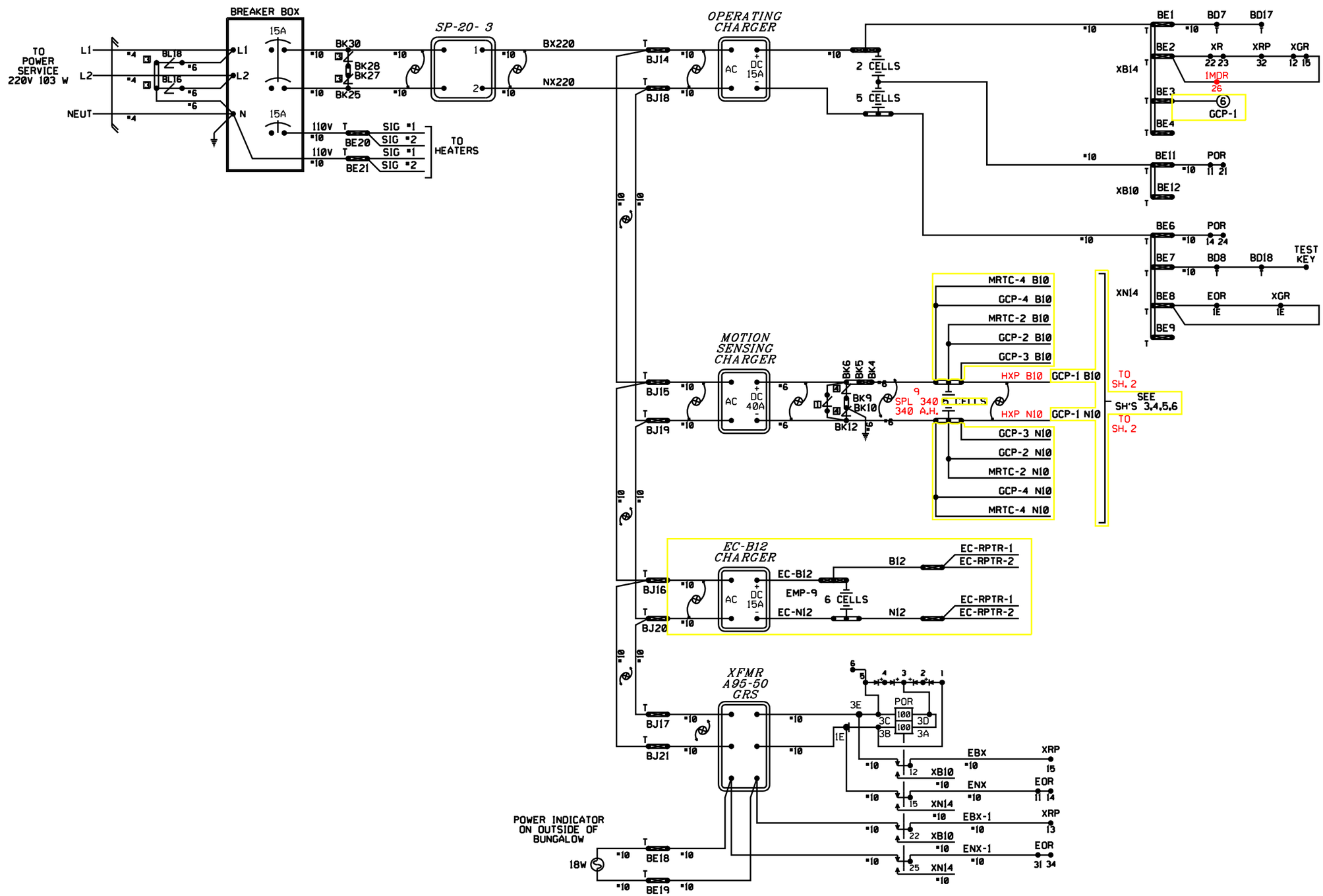

BURLINGTON NORTHERN SANTA FE RAILWAY

POWER DISTRIBUTION
ROUTE 360 ARLINGTON, ILL.

DESIGNED 02-21-11
DESIGNED 01-14-10
MENDOTA ETMS
RSS/BNSF SEQ.# 42222

REDRAWN 3-8-04
RSD/RCP

LS 0001 | MP 93.80 | SH 07 OF 14

0001093_80x03c_.dgn January 09, 2012

RED = IN YELLOW = OUT

03 10

PLAN MUST NOT BE MODIFIED WITHOUT APPROVAL OF SIGNAL ENGINEERING COPYRIGHT 2012 BNSF RAILWAY COMPANY. ALL RIGHTS RESERVED.

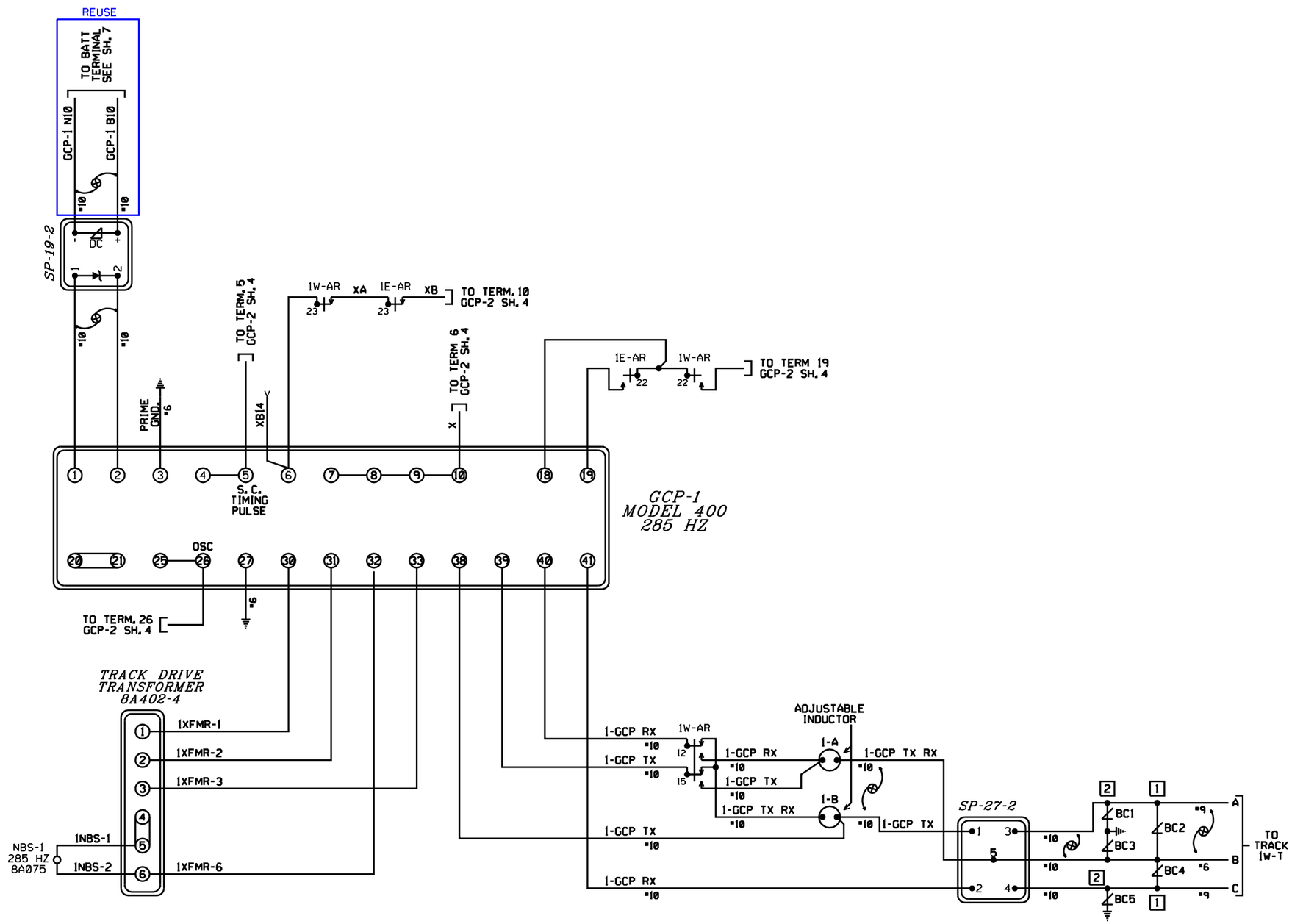

ALL OUT

REDRAWN 3-8-04 RSD/RCP							DESIGNED 01-14-10 MENDOTA ETMS RSS/BNSF SEQ.# 42222	LS 0001	MP 93.80	SH 3T OF 14

BURLINGTON NORTHERN SANTA FE RAILWAY

GCP-1 CIRCUITS
ROUTE 360 ARLINGTON, ILL.

0001093_80x03t_.dgn January 09, 2012

RED = IN YELLOW = OUT

PLAN MUST NOT BE MODIFIED WITHOUT APPROVAL OF SIGNAL ENGINEERING COPYRIGHT 2012 BNSF RAILWAY COMPANY. ALL RIGHTS RESERVED.

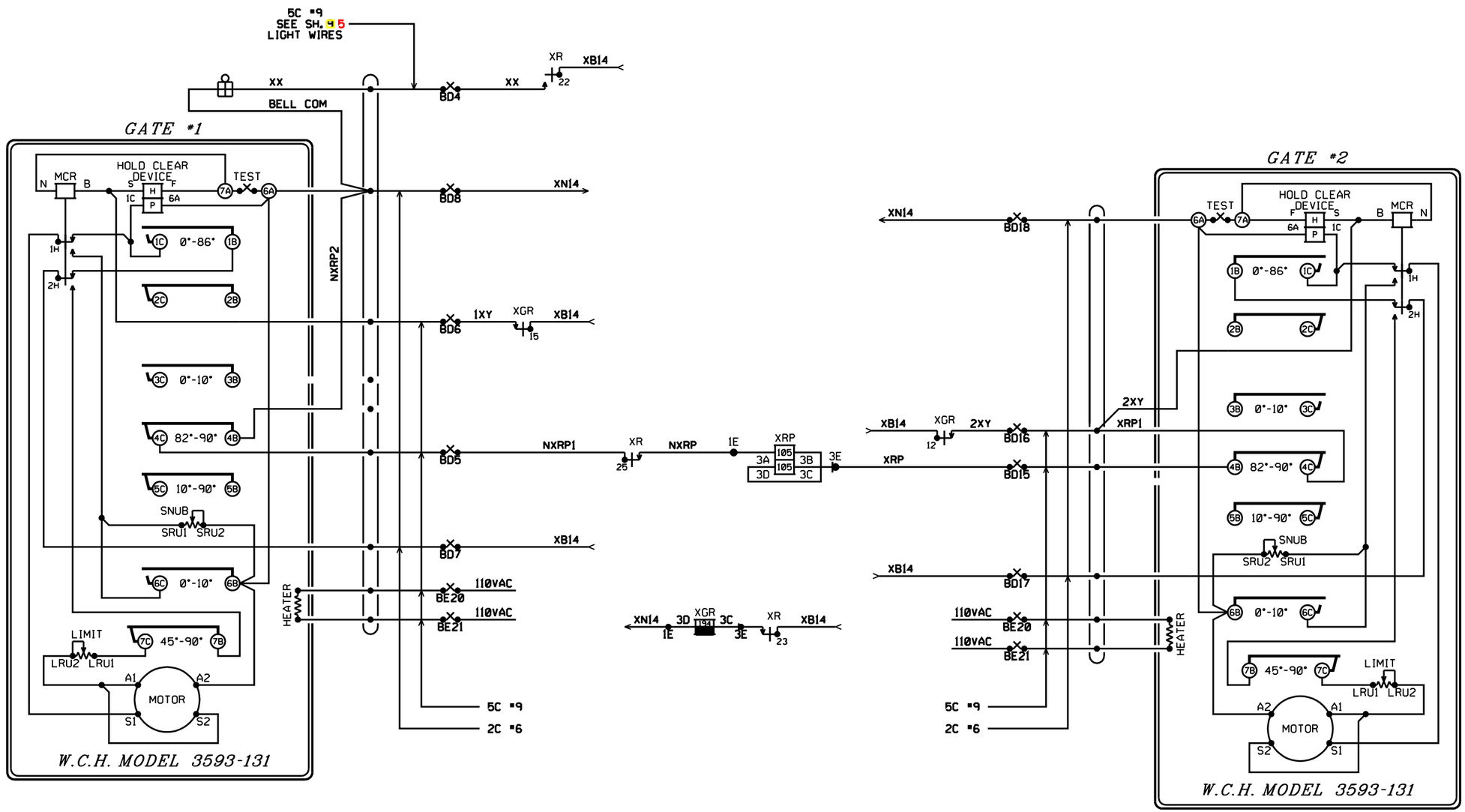

REDRAWN 3-8-04 RSD/RCP							DESIGNED 01-14-10 MENDOTA FIMS RSS/BNSF SEQ.# 42222	LS 0001	MP 93.80	SH 08 OF 14

BURLINGTON NORTHERN SANTA FE RAILWAY

GATE CIRCUIT PLAN
ROUTE 360 ARLINGTON, ILL.

0001093_80x04c_.dgn January 09, 2012

RED = IN YELLOW = OUT

PLAN MUST NOT BE MODIFIED WITHOUT APPROVAL OF SIGNAL ENGINEERING COPYRIGHT 2012 BNSF RAILWAY COMPANY. ALL RIGHTS RESERVED.

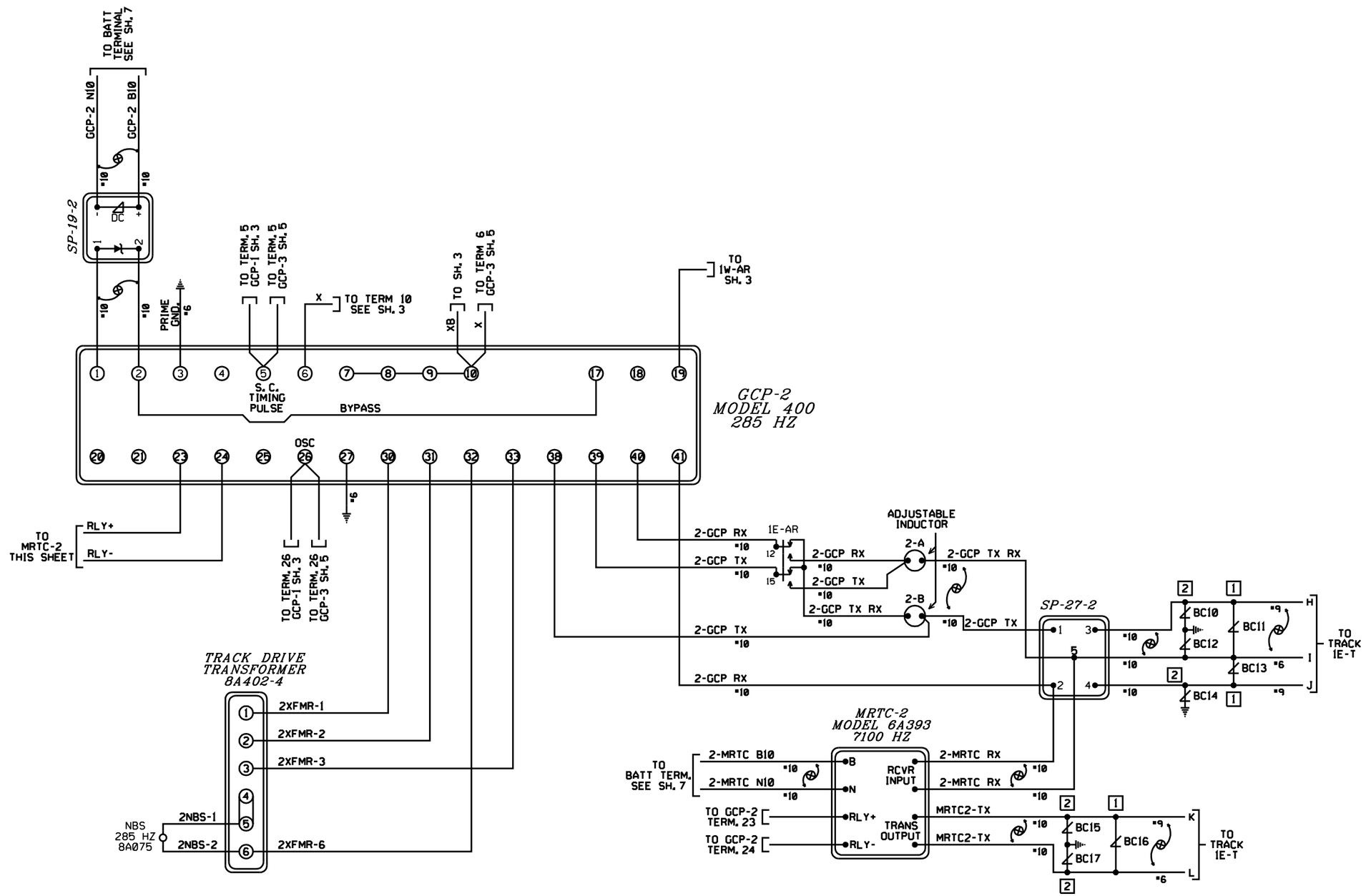

(2) REMOVE JUMPER E1-E2 AND E4-E5 ON MODULE 8A414. JUMPER E2-E3 ON MODULE 8A414.

(3) DISCONNECT ONE END OF R31 IN THE S.C. TIMING GENERATOR 8A418 MODULE IN GCP-2

(4) REMOVE ONE END OF JUMPER BETWEEN E AND E2 ON 412 FREQUENCY MODULE IN GCP-2

ALL OUT

BURLINGTON NORTHERN SANTA FE RAILWAY

GCP-2 CIRCUITS
ROUTE 360 ARLINGTON, ILL.

REDRAWN 3-8-04 RSD/RCP							DESIGNED 01-14-10 MENDOTA FIMS RSS/BNSF SEQ.# 42222	LS 0001	MP 93.80	SH 4 OF 14

0001093_80x04t_.dgn January 09, 2012 RED = IN YELLOW = OUT

PLAN MUST NOT BE MODIFIED WITHOUT APPROVAL OF SIGNAL ENGINEERING COPYRIGHT 2012 BNSF RAILWAY COMPANY. ALL RIGHTS RESERVED.

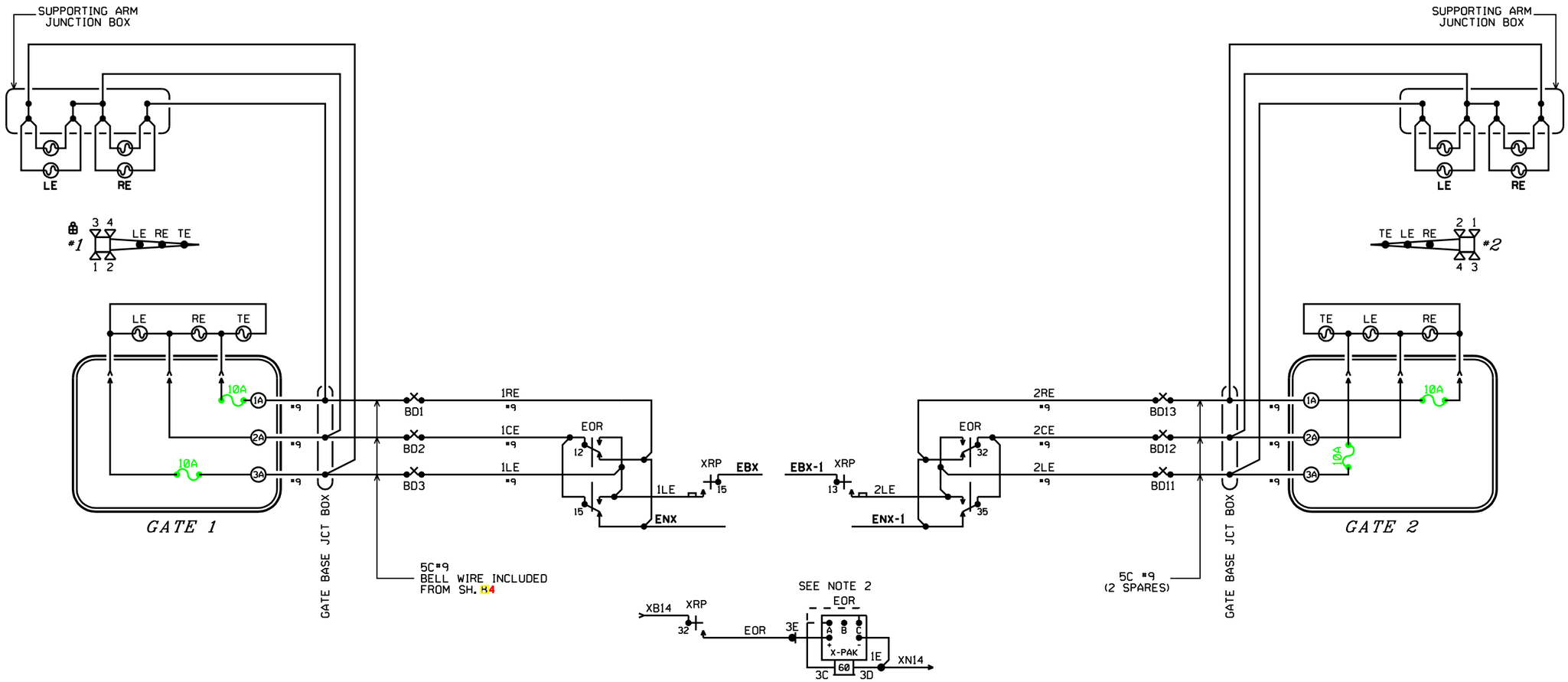

SAFETRAN S-PAK WIRING SCHEMATIC

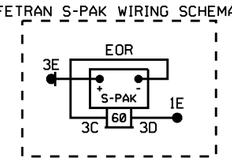

NOTES:

1.) EOR RELAY WIRING SHOWN IS FOR A GRS X-PAK FLASHER PACK. IF A SAFETRAN S-PAK #400700-81 IS USED, CONSULT THE INSERT FOR PROPER WIRING.

2.) WHEN EOR RELAY WITH 60 OHM COIL RESISTANCE IS USED CONNECT JUMPER FROM 3C TO "A". IF 18 OHM COILS ARE USED CONNECT JUMPER FROM 3C TO "C". DO NOT USE S-PAK WITH 18 OHM COILS

BURLINGTON NORTHERN SANTA FE RAILWAY

FLASHER CIRCUIT PLAN
ROUTE 360 ARLINGTON, ILL.

REDRAWN 3-8-04 RSD/RCP						DESIGNED 01-09-12 NEW XING AT MP 94.45 TCS/JML SEQ.# 47406	DESIGNED 01-14-10 MENDOTA ETMS RSS/BNSF SEQ.# 42222	LS 0001	MP 93.80	SH 09 OF 14

PLAN MUST NOT BE MODIFIED WITHOUT APPROVAL OF SIGNAL ENGINEERING COPYRIGHT 2012 BNSF RAILWAY COMPANY. ALL RIGHTS RESERVED.

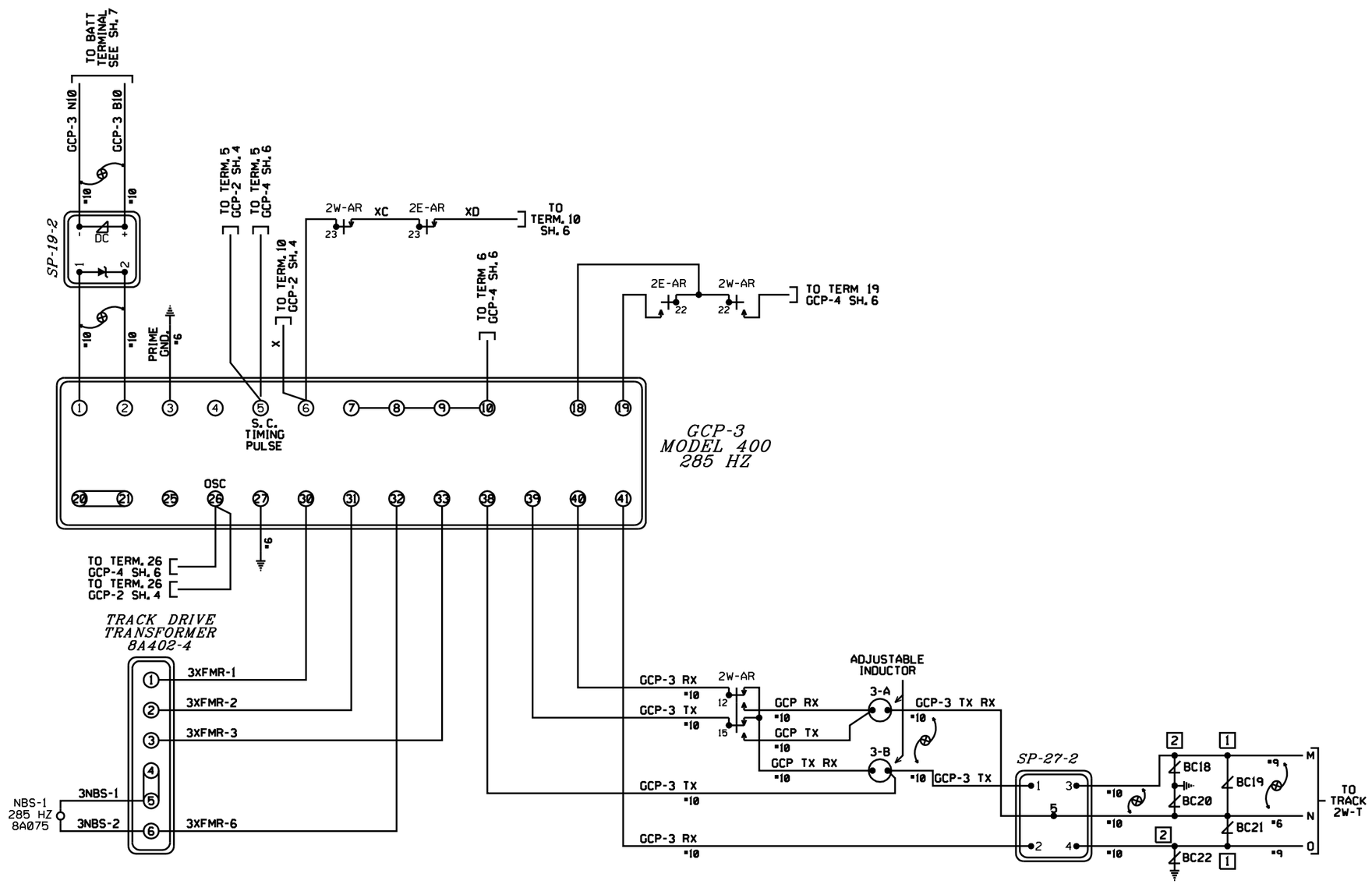

(2) REMOVE JUMPER E1-E2 AND E4-E5 ON MODULE 8A414. JUMPER E2-E3 ON MODULE 8A414.

(3) DISCONNECT ONE END OF R31 IN THE S.C. TIMING GENERATOR 8A418 MODULE IN GCP-3

(4) REMOVE ONE END OF JUMPER BETWEEN E AND E2 ON 412 FREQUENCY MODULE IN GCP-3

ALL OUT

BURLINGTON NORTHERN SANTA FE RAILWAY

GCP-3 CIRCUITS
ROUTE 360 ARLINGTON, ILL.

REDRAWN 3-8-04 RSD/RCP							DESIGNED 01-14-10 MENDOTA FIMS RSS/BNSF SEQ.# 42222	LS 0001	MP 93.80	SH 5T OF 14

0001093_80x05t_.dgn January 09, 2012

RED = IN YELLOW = OUT

PLAN MUST NOT BE MODIFIED WITHOUT APPROVAL OF SIGNAL ENGINEERING

COPYRIGHT 2012 BNSF RAILWAY COMPANY. ALL RIGHTS RESERVED.

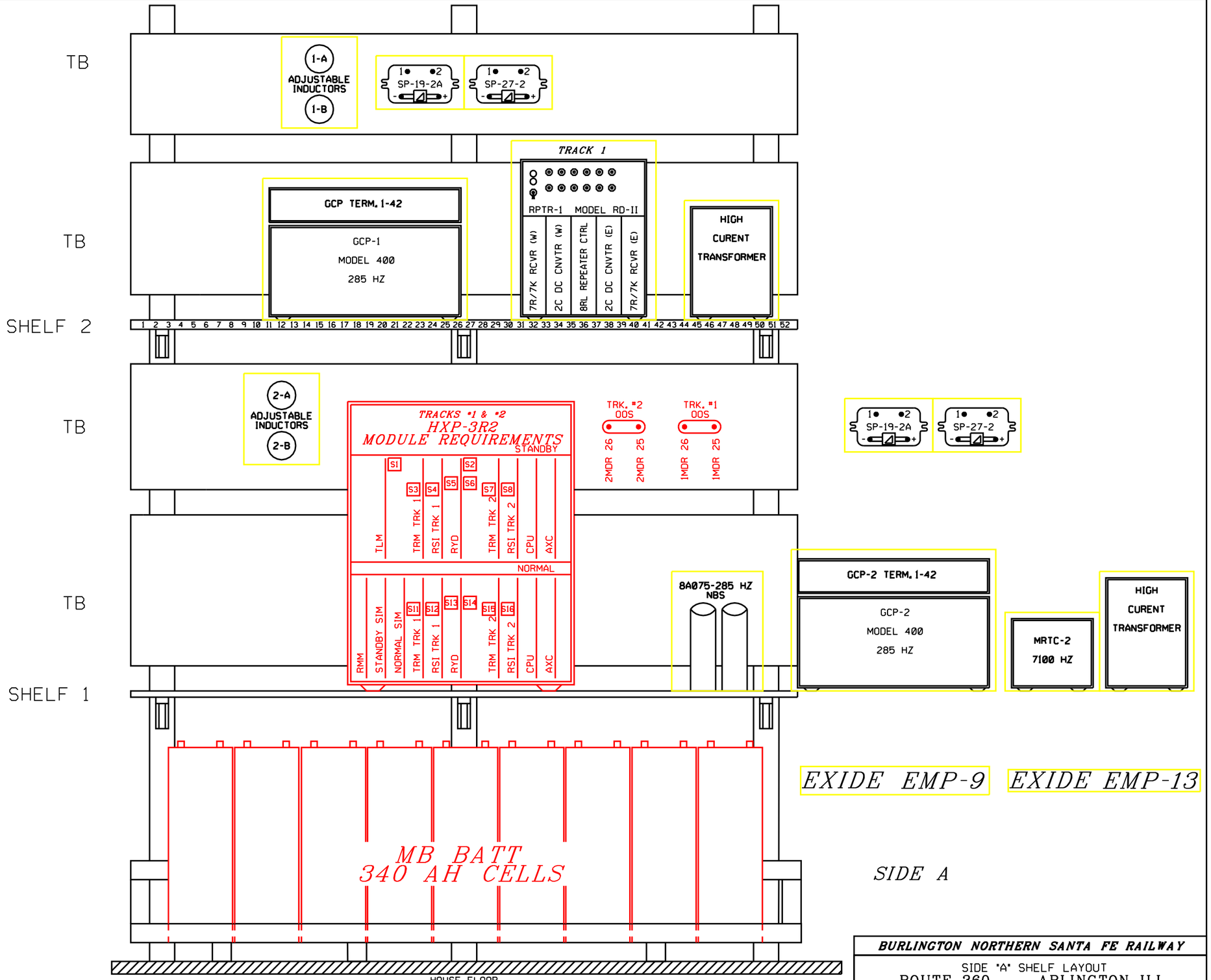

BURLINGTON NORTHERN SANTA FE RAILWAY

SIDE "A" SHELF LAYOUT
ROUTE 360 ARLINGTON, ILL.

REDRAWN 3-8-04
RSD/RCP

DESIGNED 01-14-10
MENDOTA ETMS
RSS/BNSF SEQ.# 42222

LS 0001 | MP 93.80 | SH 10 OF 14

RED = IN | YELLOW = OUT

06 10

0001093_80x06c_.dgn January 09, 2012

PLAN MUST NOT BE MODIFIED WITHOUT APPROVAL OF SIGNAL ENGINEERING COPYRIGHT 2012 BNSF RAILWAY COMPANY. ALL RIGHTS RESERVED.

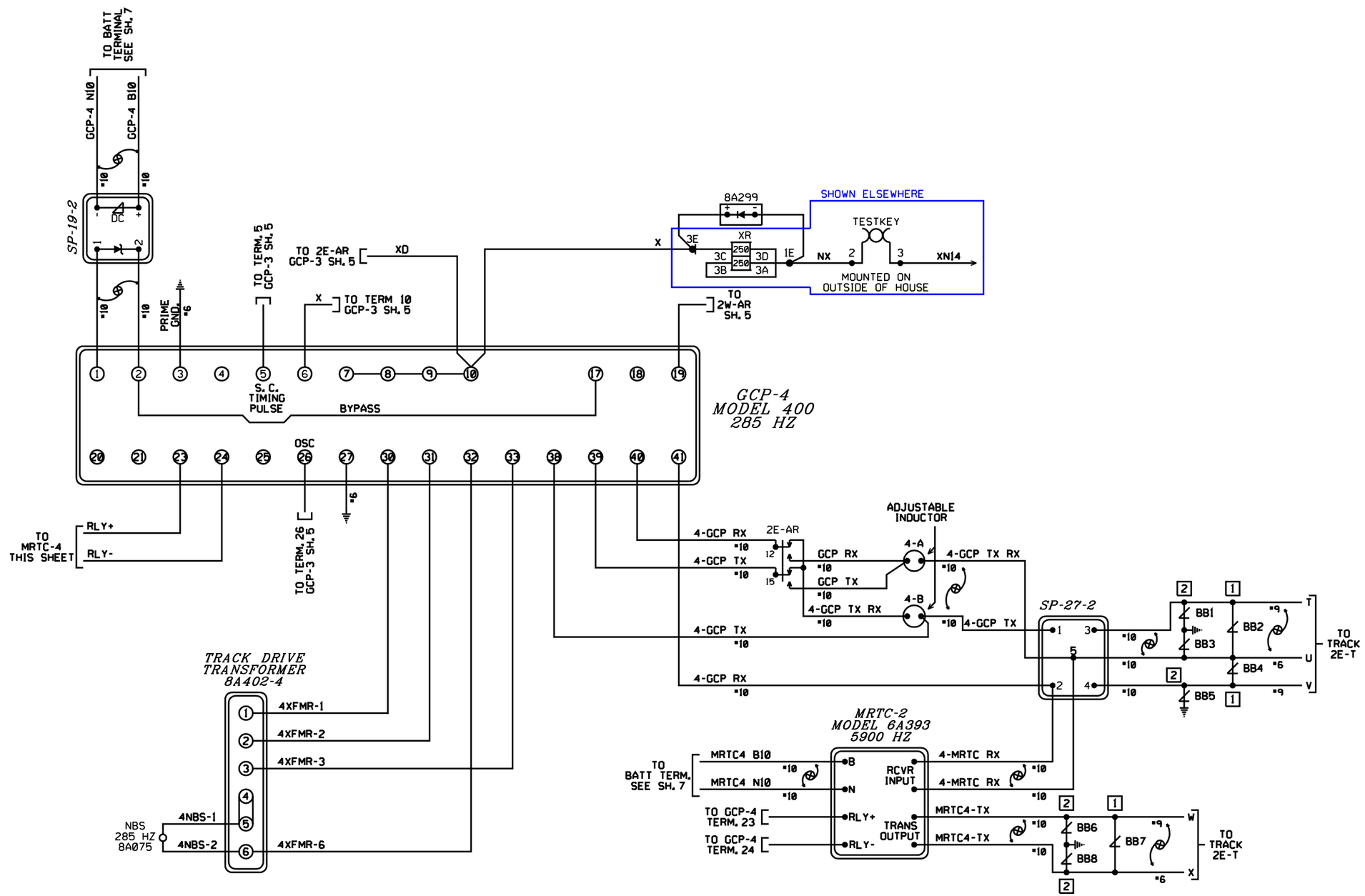

(2) REMOVE JUMPER E1-E2 AND E4-E5 ON MODULE 8A414. JUMPER E2-E3 ON MODULE 8A414.

(3) DISCONNECT ONE END OF R31 IN THE S.C. TIMING GENERATOR 8A418 MODULE IN GCP-4

(4) REMOVE ONE END OF JUMPER BETWEEN E AND E2 ON 412 FREQUENCY MODULE IN GCP-4

ALL OUT

BURLINGTON NORTHERN SANTA FE RAILWAY

GCP-4 CIRCUITS
ROUTE 360 ARLINGTON, ILL.

REDRAWN 3-8-04 RSD/RCP							DESIGNED 01-14-10 MENDOTA FIMS RSS/BNSF SEQ.# 42222	LS 0001	MP 93.80	SH 6T OF 14

0001093_80x06t_.dgn January 09, 2012 RED = IN YELLOW = OUT

PLAN MUST NOT BE MODIFIED WITHOUT APPROVAL OF SIGNAL ENGINEERING COPYRIGHT 2012 BNSF RAILWAY COMPANY. ALL RIGHTS RESERVED.

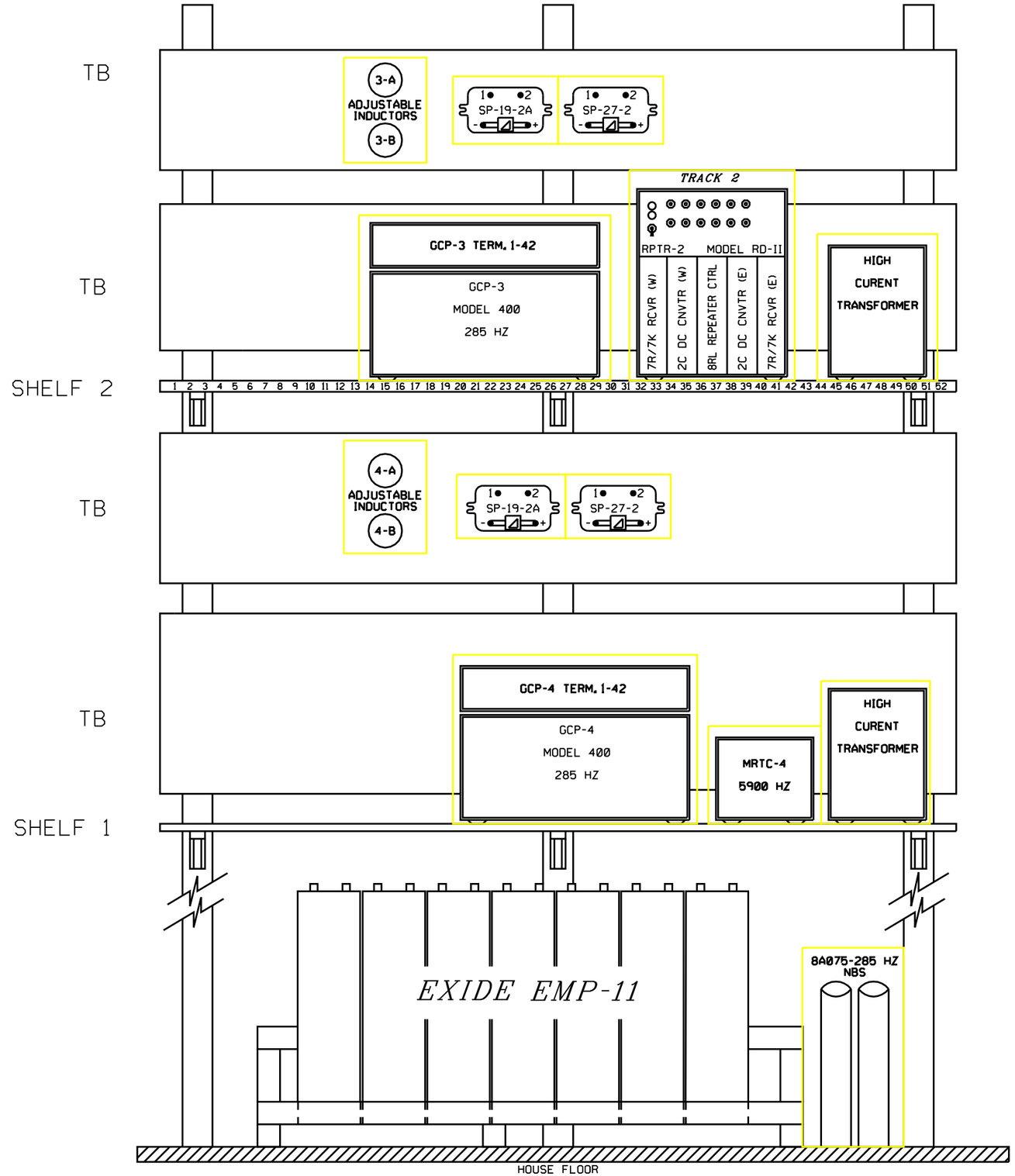

SIDE C

REDRAWN 3-8-04 RSD/RCP							DESIGNED 01-14-10 MENDOTA ETMS RSS/BNSF SEQ.# 42222	LS 0001	MP 93.80	SH 11 OF 14

BURLINGTON NORTHERN SANTA FE RAILWAY

SIDE "C" SHELF LAYOUT
ROUTE 360 ARLINGTON, ILL.

PLAN MUST NOT BE MODIFIED WITHOUT APPROVAL OF SIGNAL ENGINEERING COPYRIGHT 2012 BNSF RAILWAY COMPANY. ALL RIGHTS RESERVED.

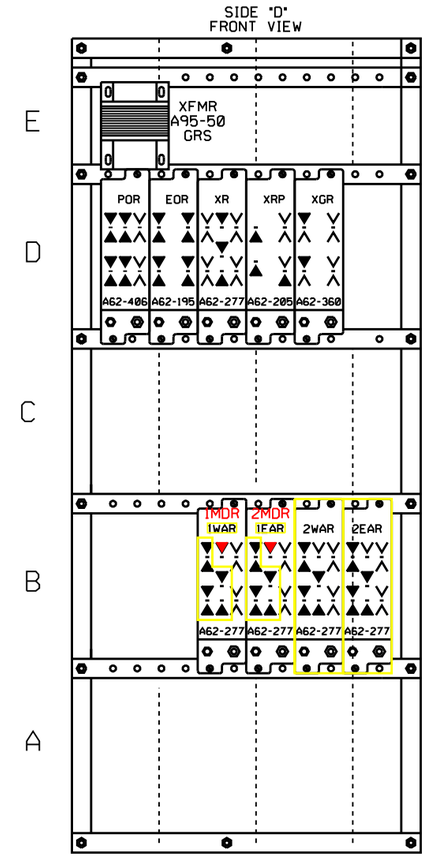

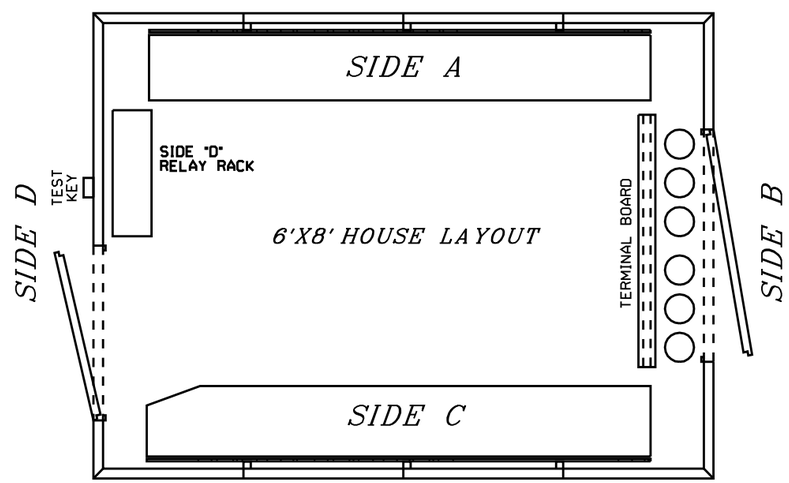

RELAY CROSS REFERENCE

GRS	SAFETRAN
A62-205	**400021**
A62-277	400004
A62-360	400200
A62-406	**400800**
A62-195	**400700**

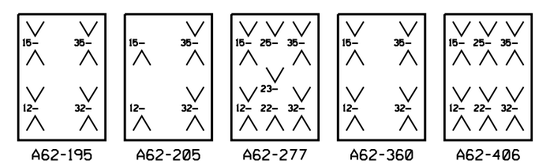

▼ = CONTACT USED
V = CONTACT NOT USED

BURLINGTON NORTHERN SANTA FE RAILWAY

SIDE "D" RACK LAYOUT
ROUTE 360 ARLINGTON, ILL.

REDRAWN 3-8-04 RSD/RCP							DESIGNED 01-14-10 MENDOTA ETMS RSS/BNSF SEQ.# 42222	LS 0001	MP 93.80	SH 12 OF 14

0001093_80x08c_.dgn January 09, 2012 RED = IN YELLOW = OUT

PLAN MUST NOT BE MODIFIED WITHOUT APPROVAL OF SIGNAL ENGINEERING COPYRIGHT 2012 BNSF RAILWAY COMPANY. ALL RIGHTS RESERVED.

SIDE "B"

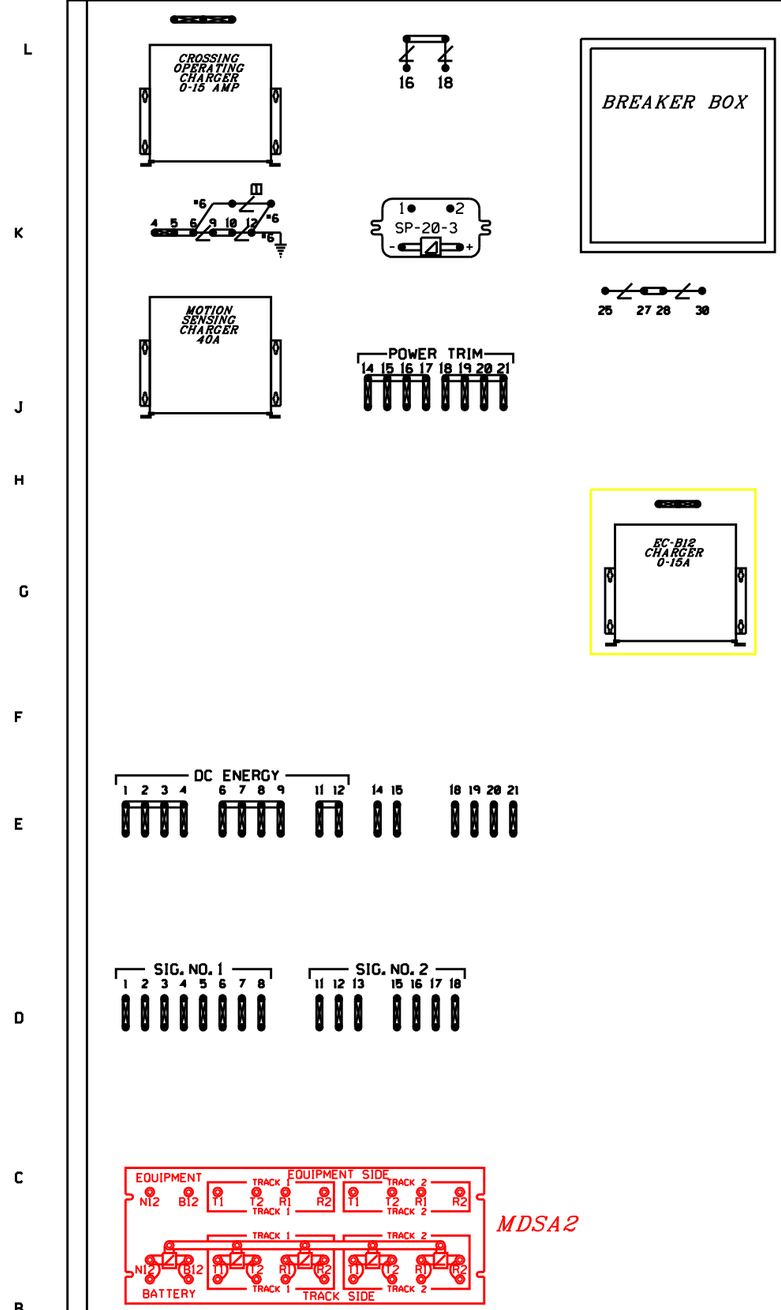

REFER TO DSK-0128 FOR TERMINAL BOARD LAYOUT

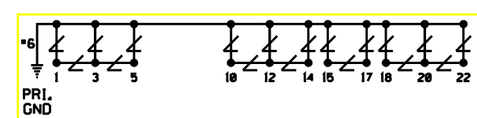

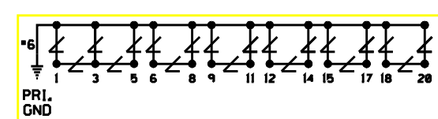

BURLINGTON NORTHERN SANTA FE RAILWAY

TERMINAL BOARD LAYOUT
ROUTE 360 ARLINGTON, ILL.

REDRAWN 3-8-04 RSD/RCP							DESIGNED 01-14-10 MENDOTA ETMS RSS/BNSF SEQ.# 42222	LS 0001	MP 93.80	SH 13 OF 14

0001093_80x09c_.dgn January 09, 2012

RED = IN YELLOW = OUT

09 10

PLAN MUST NOT BE MODIFIED WITHOUT APPROVAL OF SIGNAL ENGINEERING COPYRIGHT 2012 BNSF RAILWAY COMPANY. ALL RIGHTS RESERVED.

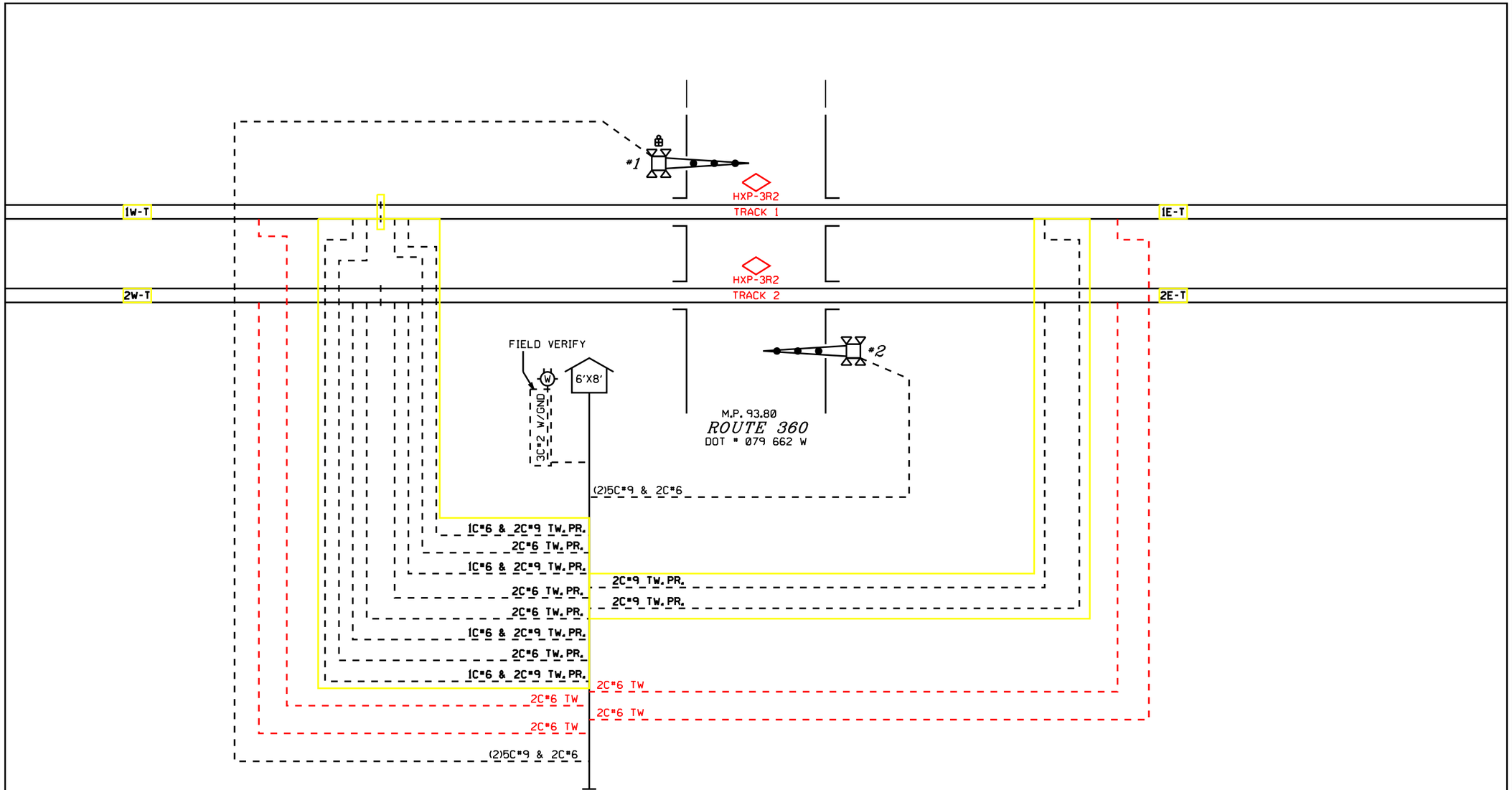

BURLINGTON NORTHERN SANTA FE RAILWAY

CABLE LAYOUT
ROUTE 360 ARLINGTON, ILL.

REDRAWN 3-8-04 RSD/RCP	PLACED IN METER 12/02/04 JEB/SLH						DESIGNED 02-21-11 DESIGNED 01-14-10 MENDOTA E IMS RSS/BNSF SEQ.# 42222	LS 0001	MP 93.80	SH 14	OF 14

0001093_80x10c_.dgn January 09, 2012 RED = IN YELLOW = OUT