Champaign Area Transmission System Study

January 2012

Prepared by _____

Approved by _____

Champaign Area Transmission System Study

Table of Contents

Section	Page
A. Executive Summary	3
B. Introduction	4
C. Ameren Transmission Planning Criteria	4
D. Assumptions	5
E. Power Flow Analysis	6
F. Mitigation Options	10
G. Timing Considerations	15
H. Conclusion	16
Exhibits	17

Champaign Area Transmission System Study

A. Executive Summary

A study was conducted to determine the future transmission needs in the Champaign area. This study included the evaluation of thermal equipment loadings and system voltages under contingency conditions. Contingency analysis considered the outage of both single and multiple transmission elements as prescribed by the NERC TPL standards and the Ameren Transmission Planning Criteria.

Based on the potential for cascading outages and voltage collapse due to outages of transmission lines and transformers in the Champaign area, system reinforcements are needed. Power flow simulations indicated that the simultaneous loss of various pairs of transmission elements in the area will lead to cascading outages and/or voltage collapse. Under these conditions, over 500 MW of load served in the Champaign area will be dropped. This amount exceeds the 300 MW threshold prescribed by the Ameren Transmission Planning Criteria.

Many of the problematic multiple contingencies involved the Rising 345/138 kV transformer. This indicates the need for a second 345/138 kV transformer in the area. Therefore, all options considered include the addition of a new 345/138 kV transformer on the west side of Champaign.

The following six mitigation options were evaluated:

- Build a new 138 kV line between the North Champaign and Southwest Campus substations and build a second 138 kV line between the Rising and Bondville substations. Add a second 345/138 kV transformer at the Rising Substation. This is the shortest line route considered; however, the 138 kV line through a one-mile section of downtown area will have to be built underground. The option is estimated to cost $61,000,000.

- Build a new 138 kV line between the Bondville and Southwest Campus substations. When the Sidney to Rising 345 kV line is constructed, include a 345/138 kV substation southwest of Champaign and connect the Bondville to Southwest line into this substation. This option is estimated to be the lowest cost at $53,000,000. It also provides a local transmission source for a future 138/69 kV bulk supply in a high growth area.

- Build a new 138 kV line between the Bondville and Southwest Campus substations and build a second 138 kV line between the Rising and Bondville substations. Add a second 345/138 kV transformer at the Rising Substation. This option is estimated to cost $59,000,000. It also provides a transmission source for a future 138/69 kV bulk supply in a high growth area.

- Build a new 138 kV line between a new Mira four breaker ring bus substation and the Southwest Campus Substation and build a second 138 kV line between the Rising and Bondville substations. Add a second 345/138 kV transformer at the Rising Substation. The cost of this option is $57,000,000. It also will require removing a 69 kV line from service until dual circuit towers are completed. Scheduling the outage of the 69 kV line will be restricted to low load periods.

- Build a new 138 kV line between the Sidney and Southwest Campus substations. Add a second 345/138 kV transformer at the Rising Substation. The estimated cost of this option is $61,000,000. This option does not provide a second supply to the Bondville Substation which will be needed in the years beyond 2021.

- Add a new 138/69 kV transformer at the North Champaign, Southwest Campus, Bondville and Mira substations and build a new 138 kV four breaker ring bus substation at the junction of the Vermilion to North Champaign and Paxton to Sidney 138 kV lines. Add a second 345/138 kV transformer at the Rising Substation. This option failed to mitigate the potential for voltage collapse in the Champaign area.

Based on the analysis performed during the course of this study, the cost estimates provided, constructability constraints, availability of existing facilities and right-of-ways and the potential for meeting long-term growth in the Champaign area, it is recommended that Ameren pursue the development of the Bondville to Southwest Campus 138 kV line. This facility should be placed in service before the summer season of 2015 if feasible.

B. Introduction

Transmission Planning initiated a detailed study to determine the future transmission needs in the Champaign area. Planned load additions include a large subdivision (Clear View) on the northwest side of Champaign, commercial development around the new interchange at I-57 and Curtis Road, downtown redevelopment and a 10 MW load addition by a large customer in Urbana. In addition, the University of Illinois is expecting continued load growth as shown in Exhibit 1. The Champaign area forecast used to develop the power flow models is presented in Exhibit 2.

C. Ameren Transmission Planning Criteria

Ameren Transmission Planning Criteria includes the evaluation of the contingencies and conditions prescribed by the NERC TPL-001, TPL-002 and TPL-003 reliability standards. These standards define single and multiple contingencies that should be evaluated in the power flow and voltage analysis of the transmission system. Ameren's criterion requires system upgrades to mitigate equipment loadings or substation voltages when those metrics fall outside of acceptable limits under the following conditions:

- With all facilities in service,
- Outage of any one transmission circuit, transmission element, or generator,
- Loss of any one transmission circuit coincident with any generator out of service,
- Concurrent outage of any two transmission elements (transmission line or transformer), an outage to a bus section, or failure of a breaker that drops 300 MW or more due to system topology or voltage collapse.

These metrics and conditions will be used to determine the future transmission needs in the Champaign area.

D. Assumptions

The power flow base case uses a North American Electric Reliability Corporation (NERC) Multi-Regional Modeling Working Group (MMWG) 2009 series 2020 summer case as the starting point. This power flow model represents most of the transmission system in the Eastern US Interconnection. It uses summer ratings for the existing generators which are dispatched to serve loads based on a 50/50 forecast of summer 2020 peak conditions. Loads in the Ameren Illinois control area were scaled to the 2021 summer peak forecast to represent a 10 year future model. Detailed models for bulk supply transformers connected directly to the transmission system with loads aggregated on the low side bus are included. The distribution system is equivalized in this model. The Vermilion Power Plant has been mothballed and thus is not dispatched in this model.

The Champaign area is supplied by five 138 kV lines. Two 138 kV lines presently supply the area from the Sidney Substation. By 2021, the Sidney Substation will contain two 345/138 kV transformers and provide about 71 percent of the summer peak power flow into the Champaign area with all facilities in service. Two 138 kV lines supply the area from the Rising Substation. The Rising Substation contains a single 345/138 kV transformer and provides about 23 percent of the summer peak power flow into the Champaign area with all facilities in service. One 138 kV line supplies the area from the Vermilion Switchyard. The Vermilion Switchyard provides about 6 percent of the summer peak power flow into the Champaign area with all facilities in service. A power flow model diagram of the Champaign area is provided in Exhibit 3.

A detailed representation of the Champaign area 69 kV system was inserted into the MMWG model for this study. The 69 kV distribution system including the transformations to 12 and 4 kV voltages and substation capacitor banks are explicitly modeled. In addition, distribution line capacitors are represented as lump capacitor banks at the distribution substations assuming an overall 85 percent load power factor. Presently there are bulk supply transformers at the North Champaign, Mira, Southwest Campus and Bondville Route 10 substations. These transformers serve 508 MW as shown in Exhibit 3. The North Champaign Substation contains two bulk supply 138/69 kV transformers and is supplied by three 138 kV transmission lines. The Southwest Campus Substation contains two bulk supply 138/69 kV transformers but is supplied by only one 138 kV transmission line. Both Mira and Bondville Route 10 substations contain one bulk supply 138/69 kV transformer and are supplied by one 138 kV transmission line. The Champaign 69 kV system is operated as a network.

Champaign area loads were adjusted to reflect a 90/10 forecast of summer 2021 peak conditions since there is less diversity at the 69 kV level. The entire University of Illinois load is by served by the Ameren distribution system after accounting for 18 MW of cogeneration. The forecast used to develop loads for the power flow models is presented in Exhibit 2. For the forecasted 2021 summer conditions, the weather normalized non-coincident peak for the Champaign area is expected to be approximately 706 MW. The local coincident summer 2021 peak load for the Champaign area is expected to be around 652 MW which includes load served by distribution substations connected directly to the 138 kV transmission system such as Leverett Road, Perkins Road, Windsor Road and Mahomet substations. Under these conditions, the Champaign area 138/69 kV transformers will supply 508 MW of load including 21.3 MW of the Danville area load via the 69 kV system.

The 2021 future year model includes several planned distribution and transmission system upgrades in the Champaign area. Major capacitor bank additions include the recently installed 14.4 MVAR bank at the Bondville Substation and planned additions of 28.8 MVAR at the North Champaign Substation, 14.4 MVAR at the Southwest Campus Substation and 10 MVAR at the Windsor Substation. Fix tap setting changes were implemented at several distribution substations. Distribution transformer loading issues were resolved by upgrading the transformers in the power flow model. Transmission upgrades include replacement of the existing 345/138 kV transformer at the Rising Substation with a 560 MVA transformer and new 345 kV line between the Rising and Sidney substations as proposed by a MISO multi-valued project. A second 560 MVA 345/138 kV transformer will be added at the Sidney Substation and three 345 kV breakers will be added to form a 345 kV ring bus. The second Sidney transformer will supply a new 138 kV bus through a new 138 kV breaker with connections to two existing line terminals and the existing 138 kV bus via a new 138 kV tie breaker. All the above upgrades are expected to be in service by the summer of 2021.

E. Power Flow Analysis

A power flow analysis was conducted to evaluate the requirements of the Ameren Transmission Planning Criteria. The results of this analysis are summarized below and instances of equipment loading or voltages outside of the acceptable limits are noted for each of the contingency conditions evaluated. This discussion will focus on transmission and distribution facilities in the Champaign area.

1. All Facilities In-service

With all facilities in-service there are no equipment loadings in the Champaign area which exceed the applicable thermal ratings. There are also no voltages in the Champaign area which fall below the acceptable range.

2. Single Contingencies

Single contingencies include the removal of all elements within a zone defined by the protection system. Faulted elements included all of the transmission facilities serving central Illinois and the bulk supply transformers serving the Champaign area. Simulation of the outage of all single branches provided assurance that no critical contingencies were excluded. No transmission facility loadings exceeded the applicable thermal ratings under single contingency conditions.

Loadings on several distribution facilities exceeded their summer emergency thermal ratings under single contingency conditions as listed below:

- North Champaign 138/69 kV Transformer #3 experienced a loading of 103 percent of its summer emergency rating during the outage of the Sidney to Southwest Campus 138 kV line.
- Line 6666 termination at the Oak Street Substation experienced a loading of 106 percent of its summer emergency rating for the outage of the Sidney to Southwest Campus 138 kV line.
- Line 6664 termination at the Oak Street Substation experienced a loading of 111 percent of its summer emergency rating for the outage of the Sidney to Southwest Campus 138 kV line.
- Line 6618 between the Orchard Substation and Savoy Tap loaded to 102 percent of its summer emergency rating for the outage of the Sidney to Southwest Campus 138 kV line.

Transmission voltages dropped below 95 percent at a two substations as listed below:

- Windsor 138 kV voltage dropped to 94 percent for the outage of the Rising 345/138 transformer.
- Southwest Campus 138 kV voltage dropped to 93 percent for the outage of the Rising 345/138 transformer.

Distribution voltages fell below 96 percent at a two substations as listed below:

- Perkins Road and Leverett Road 12.47 kV voltages fell to 95 percent for the outage of the Rising 345/138 transformer.
- Mahomet 12.47 kV voltage fell to 94 percent for the outage of the Rising 345/138 transformer.

In general, distribution voltages remained at acceptable levels for most of the contingencies considered. Since the distribution voltage limits are established at the 4 and 12 kV levels, load tap changing bulk transformers in addition to taps on the distribution transformers provide additional boost to compensate for low transmission voltages.

3. Line and Generator Contingencies

The largest generator in vicinity of the Champaign area is the Clinton Power Station. This plant consists of a single generator with a net output in excess of 1162 MW. A worst case scenario is to replace this generation with imports from the East. In this case, 1162 MW were imported from the AEP balancing authority area. Using a revised power flow model with Clinton generation displaced with AEP imports, all the single contingencies described above were simulated. No transmission facility loadings exceeded the applicable thermal ratings under line and generator contingency conditions.

Loadings on several distribution facilities exceeded their summer emergency thermal ratings under single contingency conditions as delineated below:

- North Champaign 138/69 kV Transformer #3 experienced a loading of 104 percent of its summer emergency rating during the outage of the Sidney to Southwest Campus 138 kV line.
- Mira 138/69 kV Transformer #1 experienced a loading of 101 percent of its summer emergency rating during the outage of the Sidney to Southwest Campus 138 kV line.
- Line 6666 termination at the Oak Street Substation experienced a loading of 105 percent of its summer emergency rating for the outage of the Sidney to Southwest Campus 138 kV line.
- Line 6664 termination at the Oak Street Substation experienced a loading of 108 percent of its summer emergency rating for the outage of the Sidney to Southwest Campus 138 kV line.
- Line 6618 between the Orchard Substation and Savoy Tap loaded to 106 percent of its summer emergency rating for the outage of the Sidney to Southwest Campus 138 kV line.

Transmission voltages dropped below 95 percent at several substations as listed below:

- Bondville, Leverett Road and North Champaign 138 kV voltages dropped to 94 percent for the outage of the Rising 345/138 transformer.
- Windsor and Southwest Campus 138 kV voltages dropped to 93 percent for the outage of the Rising 345/138 transformer.

Distribution voltages fell below 96 percent at several substations as listed below:

- Perkins Road, Leverett Road and Mahomet 12.47 kV voltages fell to 94 percent for the outage of the Rising 345/138 transformer.
- Windsor 12.47 kV voltage fell to 95 percent for the outage of the Rising 345/138 transformer.

All the above substations are connected directly to the transmission system via 138/12.47 kV transformers.

4. Multiple Contingencies

Multiple contingencies consist of concurrent outages of transmission elements (lines and transformers), bus section outages and breaker failure scenarios. Concurrent outages were examined based on every possible combination of the following single contingencies:

- Sidney to Rising 345 kV Line (Rising 345/138 kV Transformer #1)
- Sidney 345/138 kV Transformer #1
- Sidney to Eugene 345 kV Line 4501
- Sidney to Kansas 345 kV Line 4525
- Sidney to Southwest Campus Line 1312
- Sidney to Mira to North Champaign 138 kV Line 1386
- North Champaign to Vermilion 138 kV Line 1396
- Rising to Rantoul 138 kV Line 1554
- Sidney to Murdock 138 kV Line 1561
- Rising to North Champaign 138 kV Line 1592
- Rising to Bondville 138 kV Line 1642
- Sidney to Paxton 138 kV Line 1833

Combining the outage of these single facilities resulted in 66 unique multiple contingencies. Since the two Sidney 345/138 transformers are identical, not all combinations of these transformers with other elements were evaluated. Bus section outages included the straight buses at the Rising, Sidney and North Champaign substations. Breaker failure scenarios were simulated at the Rising (4), Sidney (6), and North Champaign (5) substations. There are no 138 kV breakers at the Bondville, Mira or Southwest Campus substations. For the multiple contingency simulations, the results were evaluated for voltage collapse or cascading outages that would drop the entire load served from the Champaign 69 kV system. During these simulations, the load tap changing transformers were fixed since they cannot react fast enough to prevent voltage collapse. Voltage collapse is assumed to be certain if a steady-state power flow shows that post-contingency voltage drops to 85 percent of the nominal value, and voltage collapse is likely if a steady-state power flow shows that post-contingency voltage drops to 86 - 89 %.

In many instances, the voltage collapse event is precipitated by a fault on a transmission line. During the time the fault is connected to the system, voltages at both the transmission and distribution levels of the system are very low. Although this period of very low voltage may be relatively short, perhaps only 5-10 cycles (0.083-0.167 seconds), some loads connected to the system can change drastically and not return to the pre-fault status when the faulted line is disconnected from the system by the opening of circuit breakers. The drastic change in load characteristics may cause a voltage collapse to occur in situations where, absent the effect of the fault, a collapse would have been avoided. The impact on load characteristics due to the voltage sag during the time a fault is connected to the system was not directly considered in the determination of exposure to voltage collapse for the Champaign area. However, the presence of this phenomenon indicates that the situation may be worse than depicted by the steady state analysis.

The following combinations of outages resulted in voltages at multiple locations (number in parenthesis) low enough to indicate the initiation of a voltage collapse for the area based on steady state analysis:

- Rising Transformer & Rising to Rantoul (12)
- Rising Transformer & Paxton to Sidney Line (105)
- Rising Transformer & Sidney to SW Campus Line (121)
- Rising Transformer & Sidney to Mira Line (123)
- Rising Transformer & Vermilion to N Champaign Line (52)
- Rising Transformer & Rising to Bondville Line (110)
- Rising Transformer & Sidney to Eugene Line (148)
- Rising Transformer & Sidney to Kansas Line (108)
- Rising Transformer & Sidney Transformer (122)
- Sidney to SW Campus Line & Rising to N Champaign Line (37)
- Sidney to SW Campus Line & Rising to Bondville Line (109)
- Sidney to SW Campus Line & Sidney to Mira Line (98)
- Rising to Bondville Line & Sidney to Mira Line (14)
- Rising to Bondville Line & Rising to N Champaign Line (40)

Due to the large number of locations experiencing voltages at 85 percent or below under the multiple contingencies described above, voltage collapse of the entire Champaign area would occur, resulting in the loss of over 500 MW. This large load loss exceeds the Ameren Transmission Planning Criteria which requires system improvements if exposure to loss of service to more than 300 MW is predicted.

Cascading is also likely for the following two outage scenarios:

- Sidney to SW Campus Line & Sidney to Mira Line
- Sidney to SW Campus Line & Rising to Bondville Line

Under these two scenarios, three of the six Champaign area 138/69 kV bulk supply transformers are automatically outaged. Loading on two of the three remaining bulk supply transformers will exceed the relay limit and be tripped within seconds. The remaining bulk supply transformer will quickly overload and be tripped by the protective relay system. These relay actions would drop the entire load served by Champaign 69 kV system. This amounts to over 500 MW load. (It is not possible to eliminate the exposure to tripping the bulk supply transformers by raising the protective relay settings.)

F. Mitigation Options

Mitigation of the thermal loading issues identified for single and line plus generator contingencies are straightforward and can be resolved by upgrading line conductors, structures or terminal equipment in the substation. Voltage issues are manageable and usually mitigated by installing fixed or switched capacitor banks. However, situations involving cascading outages and voltage collapse are more complex and usually require additional transmission supply.
Of the fourteen multiple contingencies that resulted in voltage collapse, nine of those involve the loss of the 345/138 kV transformer at Rising. This indicates the need for an additional 345/138 kV transformer in the area. Therefore, all options considered and cost estimates developed include a new 345/138 kV transformer on the west side of Champaign.

Champaign Area Transmission System Study

Considering the five remaining voltage collapse scenarios and two cascading scenarios that do not involve the Rising 345/138 kV transformer, it can be seen that the commonality is the loss of the 138 kV supply to the Bondville and Southwest Campus substations. This indicates that mitigation options which add a second transmission supply to the Bondville and Southwest Campus substation are likely to be the best solutions to the potential cascading and voltage collapse. To this end, five options were developed that involve a second supply to these substations in such a manner than no single contingency will remove two 138/69 kV bulk supply transformers from service. An option that involves the addition of only bulk supply transformers and substation development was also considered. A new 345/138 kV transformer on the west side of Champaign is needed in each of 138 kV solutions. These options are listed below:

- Build a new 138 kV line between the North Champaign and Southwest Campus substations and build a second 138 kV line between Rising and Bondville substations.
- Build a new 138 kV line between the Bondville and Southwest Campus substations with a new 345 kV and 138 kV three breaker ring bus substation in the middle.
- Build a new 138 kV line between the Bondville and Southwest Campus substations and build a second 138 kV line between Rising and Bondville substations.
- Build a new 138 kV line between a new Mira four breaker ring bus substation and the Southwest Campus Substation and build a second 138 kV line between Rising and Bondville substations.
- Build a new 138 kV line between the Sidney and Southwest Campus substations.
- Add a new 138/69 kV transformer at the North Champaign, Southwest Campus, Bondville and Mira Substations and build a new four breaker ring bus substation at the junction of the Vermilion to North Champaign and Paxton to Sidney 138 kV lines.

All of these options except the bulk supply option successfully mitigated the potential for cascading and voltage collapse. With the bulk supply option there remained several locations where the voltage dropped below 85 percent for the overlapping outage of two existing 138 kV lines. This option also resulted in additional overloads on the distribution system. Therefore it is deemed to be unacceptable. Exhibit 4 provides the costs of the each of the acceptable solutions. The acceptable solutions also mitigated all thermal and voltage issues identified under single contingency and line plus generator outage contingencies as described above. Each alternative solution is discussed in further detail below:

1. New North Champaign to Southwest Campus 138 kV Line

The North Champaign transmission option involves the construction of 1.5 miles of double circuit 138 kV and 69 kV line, 1 mile of single circuit 138 kV line and 1 mile of underground 138 kV line through the downtown area between the North Champaign and Southwest Campus substations. A new five breaker ring bus will be constructed in the Southwest Campus Substation. This ring bus will accommodate the existing line, the new line, the two existing 138/69 kV transformers and a new 138/69 kV transformer which must be installed. An empty terminal bay in the North Champaign Substation will be developed to terminate the new 138 kV line. A second 3.5 mile 138 kV line will be constructed between the Rising and Bondville substations. At Bondville, a new three breaker ring bus will be developed to accommodate the new line, the existing line and the existing 138/69 kV transformer. The line will be terminated

on the existing 138 kV bus via a new 138 kV breaker in the Rising Substation. This option also requires the installation of a new 345/138 kV transformer at the Rising Substation. A 345 kV four breaker ring bus will be built at Rising. The new transformer will be connected to a new 138 kV bus through a 138 kV breaker. A 138 kV tie breaker will be added at Rising to connect the two 138 kV straight buses. Exhibit 5 provides a detailed one-line drawing of this option. The estimated cost of implementing this option is $61,000,000.

All of the previously identified thermal and voltage criteria violations that occurred under single contingencies as well as line plus generator contingencies were successfully mitigated by this option. This is the shortest line route considered; however, stiff resistance to building the line through the downtown area is expected. It is assumed that line through the downtown area will have to be built underground. The construction of this line will also require removing several 69 kV lines from service until the dual circuit towers are completed. Scheduling the outage of these 69 kV lines will be restricted to low load periods.

2. New Bondville to Southwest Campus 138 kV Line

The Bondville transmission option involves the construction of 1.37 miles of new 138 kV line between Windsor Tap and the Southwest Campus Substation. A 1.45 mile section of existing 138 kV line along Curtis Road will be reconductored. An additional 8.57 miles of new 138 kV line will be constructed from Windsor Road to the Bondville Substation with the capability to support a future 69 kV circuit. A new five breaker ring bus will be constructed in the Southwest Campus Substation. This ring bus will accommodate the existing line, the new line, the two existing 138/69 kV transformers and a new 138/69 kV transformer which must be installed. Switching devices will be upgraded and added at the Windsor Substation. At Bondville a new three breaker ring bus will be developed to accommodate the new line, the existing line and the existing 138/69 kV transformer. This option also requires the construction of a new 345/138 kV substation in the vicinity of where the new Southwest Campus to Bondville 138 kV line turns east. The new 138 kV line will be routed into and out of the new substation and terminated into a three breaker 138 kV ring bus. This ring bus will be connected to a three breaker 345 kV ring bus via a new 345/138 kV transformer. The Sidney to Rising 345 kV line will also be routed into and out of this new substation and terminated into the three breaker 345 kV ring bus. Exhibit 6 contains a one-line drawing of this option which is estimated to cost $53,000,000.

All of the previously identified thermal and voltage criteria violations that occurred under single contingencies as well as line plus generator contingencies were successfully mitigated by this option. The new substation provides the capability to add future 138/69 kV bulk supply in this area and to expand the 69 kV system into a growing area that will need expansion in the near future.

3. New Rising to Southwest Campus 138 kV Line

The Rising transmission option involves the construction of 1.37 miles of new 138 kV line between Windsor Tap and the Southwest Campus Substation. A 1.45 mile section of existing 138 kV line along Curtis Road will be reconductored. An additional 8.57 miles of new 138 kV

line will be constructed from Windsor Road to the Bondville Substation with the capability to support a future 69 kV circuit. A second 3.5 mile 138 kV line will be built between the Rising and Bondville substations. A new five breaker ring bus will be constructed in the Southwest Campus Substation. This ring bus will accommodate the existing line, the new line, the two existing 138/69 kV transformers and a new 138/69 kV transformer which must be installed. Switching devices will be upgraded and added at the Windsor Substation. At Bondville, a new four breaker ring bus will be developed to accommodate the two new lines, the existing line and the existing 138/69 kV transformer. The new Rising to Bondville line will be terminated on the existing 138 kV bus via a new 138 kV breaker in the Rising Substation. This option also requires the installation of a new 345/138 kV transformer at the Rising Substation. A 345 kV four breaker ring bus will be built at Rising. The new transformer will be connected to a new 138 kV bus through a 138 kV breaker. A 138 kV tie breaker will be added at Rising to connect the two 138 kV straight buses. Exhibit 7 provides a one-line drawing of this option. The estimated cost to implement this option is $59,000,000.

All of the previously identified thermal and voltage criteria violations that occurred under single contingencies as well as line plus generator contingencies were successfully mitigated by this option. This option provides a transmission source for a 138/69 kV bulk supply in this area and the capability to expand the 69 kV system into a growing area that will need expansion in the near future.

4. New Mira to Southwest Campus 138 kV Line

The Mira transmission option involves the construction of 4.75 miles of new double circuit 138 kV and 69 kV line with 12 kV under build between a new Mira switching station and the existing Southwest Campus Substation. A new five breaker ring bus will be constructed in the Southwest Campus Substation. This ring bus will accommodate the existing line, the new line, the two existing 138/69 kV transformers and a new 138/69 kV transformer which must be installed. A new four breaker ring bus will be constructed in the new Mira switching station at the Mira 138 kV line tap. The Mira switching station will consist of 4 line terminals connecting to the Southwest Campus, Mira, Sidney and Perkins Road substations. A second 3.5 mile 138 kV line will be constructed between the Rising and Bondville substations. At Bondville a new three breaker ring bus will be developed to accommodate the new line, the existing line and the existing 138/69 kV transformer. The line will be terminated on the existing 138 kV bus via a new 138 kV breaker in the Rising Substation. This option also requires the installation of a new 345/138 kV transformer at the Rising Substation. A 345 kV four breaker ring bus will be built at Rising. The new transformer will be connected to a new 138 kV bus through a 138 kV breaker. A 138 kV tie breaker will be added at Rising to connect the two 138 kV straight buses. Exhibit 8 portrays a one-line drawing of this option. Implementation of this option is expected to cost $57,000,000.

All of the previously identified thermal and voltage criteria violations that occurred under single contingencies as well as line plus generator contingencies were successfully mitigated by this option. There are concerns with this option since the existing 69 kV line will have to be taken out of service while the new dual circuit 138 kV and 69 kV lines are being constructed. The 69 kV line can only be taken out of service during low load periods.

5. New Sidney to Southwest Campus 138 kV Line

The Sidney transmission option involves the construction of 15 miles of new single circuit 138 kV line with possible sections of double circuit with 69 kV line and 12 kV under build between the Sidney and Southwest Campus substations. A new five breaker ring bus will be constructed in the Southwest Campus Substation. This ring bus will accommodate the existing line, the new line, the two existing 138/69 kV transformers and a new 138/69 kV transformer which must be installed. A new 138 kV line terminal will be installed in the Sidney Substation. This option also requires the installation of a new 345/138 kV transformer at the Rising Substation. A 345 kV four breaker ring bus will be built at Rising. The new transformer will be connected to a new 138 kV bus through a 138 kV breaker. A 138 kV tie breaker will be added at Rising to connect the two 138 kV straight buses. Exhibit 9 presents a one-line drawing of this option. The estimated cost to implement this option is $61,000,000.

All of the previously identified thermal and voltage criteria violations that occurred under single contingencies as well as line plus generator contingencies were successfully mitigated by this option. This option may be able to utilize existing right-of-way or co-exist on the same structures as the Sidney to Rising 345 kV line for part of the route. A second supply to the Bondville Substation was not required by 2021; however, it may be needed in the subsequent years.

6. Add Bulk Supply Transformers and Substation Development

The bulk supply option involves the installation of a new 138/69 kV transformer in the North Champaign, Southwest Campus, Bondville and Mira substations. Breakers will be added on both the low and high-side of these new transformers. In addition, 138 kV breakers will be added on the high-side of the existing transformers at the Mira and Southwest Campus substations to prevent a transformer fault from outaging multiple transformers. A new 138 kV breaker station will be built at the junction of the Vermilion to North Champaign and Paxton to Sidney 138 kV lines. It is assumed that property can be acquired at this junction. Both lines will be routed into and out of the breaker station. This option also requires the installation of a new 345/138 kV transformer at the Rising Substation. A 345 kV four breaker ring bus will be built at Rising. The new transformer will be connected to a new 138 kV bus through a 138 kV breaker. A 138 kV tie breaker will be added at Rising to connect the two 138 kV straight buses. Exhibit 10 provides a detailed one-line drawing of this option.

This option did not mitigate the thermal loading of Line 6666 and 6664 terminations at the Oak Street Substation. It also resulted in low transmission voltages at the Mira Substation. For the coincident outage of the Sidney to Southwest Campus and Rising to Bondville 138 kV lines, or the coincident outage of the Sidney to Southwest Campus and Sidney to Mira 138 kV lines, voltages at several buses dropped below 85 percent. This condition is expected to worsen quickly with future load growth. Therefore this solution is deemed to be unacceptable.

G. Timing Considerations

While the analysis based on the 2021 long-term power flow model provides an appropriate basis for the development of a comprehensive long-term transmission plan, it does not identify the timing for the various aspects of a mitigation plan. To provide further insight as to when the mitigation plans considered need to be in-service, a 2015 power flow model was constructed using the same assumptions incorporated into the 2021 power flow model. The 2015 MMWG model was modified to reflect a 90/10 forecast of summer 2015 peak conditions for the Champaign area, the planned transmission system upgrades scheduled to be in-service, and the detailed representation of the Champaign 69 kV system. The Sidney to Rising 345 kV line will not be in service by the 2015 summer peak period and thus is not included in the 2015 power flow model.

The 2015 model was chosen because it was developed consistent with the 2021 model and is available from the MMWG 2009 series of cases. It also represents a reasonable time frame to acquire right-of-way and build a new 138 kV line.

Evaluation of multiple contingencies consisting of overlapping outages of transmission elements (line and transformer), bus section outages and breaker failure scenarios resulted in voltage collapse. The following combinations of outages resulted in voltages at several locations (number in parenthesis) low enough to indicate initiation of a voltage collapse for the area:

- Sidney Transformer & Rising to N Champaign Line (34)
- Sidney Transformer & Rising to Bondville Line (53)
- Rising Transformer & Sidney to SW Campus Line (117)
- Rising Transformer & Sidney to Mira Line (99)
- Rising Transformer & Sidney Transformer (120)
- Sidney to SW Campus Line & Rising to N Champaign Line (3)
- Sidney to SW Campus Line & Rising to Bondville Line (103)
- Sidney to SW Campus Line & Sidney to Mira Line (108)
- Rising to Bondville Line & Rising to N Champaign Line (2)

To determine the point at which voltage collapse begins to occur, the Champaign area load was scaled down until contingency voltages remained above 85 percent except for a few remote locations served by radial lines. It was found that the Champaign area load will begin to experience voltage collapse when the load exceeds 87 percent of the forecasted load modeled in the 2015 case. This corresponds to a load of 556 MW. The most recent Champaign area forecast shown in Exhibit 11 projects a 2011 summer peak load of 563 MW if most of the University of Illinois load is included. If the University of Illinois continues to limit their demand on the Ameren system to the presently contracted level of 60 MW, the 556 MW threshold is reached in the summer of 2015. *(As stated in Section E.4., the analysis which established the 556 MW threshold ignores the dynamic response of some loads to the voltage sag which occurs during a fault. The exposure to voltage collapse may be present at an area load less than 556 MW.)*

H. Conclusions

Based on the potential for cascading and voltage collapse in the Champaign area, it is clear that system reinforcements are needed. Power flow simulations indicated that the simultaneous loss of various pairs of transmission elements in the area will lead to cascading outages and/or voltage collapse. Under these conditions, over 500 MW of load served by the Champaign 69 kV system will be dropped. This amount exceeds the 300 MW threshold prescribed by the Ameren Transmission Planning Criteria thus requiring system reinforcement.

Most of the problematic multiple contingencies involved the Rising 345/138 kV transformer. This indicates the need for a second 345/138 kV transformer in the area. Therefore, all options considered include the addition of a new 345/138 kV transformer on the west side of Champaign.

Six options were considered for mitigating the exposure to cascading and/or voltage collapse. One option considered only the addition of new bulk supply transformers at four substations and the addition of a new 138 kV breaker station. The other five options explored the potential of building a new 138 kV line between the Southwest Campus Substation and either North Champaign, Bondville, Bondville/Rising, Mira or Sidney. All but the first option resolved the potential cascading and/or voltage collapse. They also successfully mitigated all of the previous identified thermal and voltage criteria violations that occurred under single contingencies as well as line plus generator contingencies.

The recommended option is to construct the Southwest Campus to Bondville 138 kV line. This provides both the Southwest Campus and Bondville substations with two independent 138 kV supplies. It also provides an excellent opportunity to add a new 138/69 bulk supply in a high load growth area at some point in the future. Other solutions are either more expensive or present constructability issues due to long term outages of existing 69 kV lines. This option should be placed in service by the summer season of 2015, or sooner if feasible.

Champaign Area Transmission System Study

Exhibit 1
University of Illinois Load Forecast

Projected Peak Electrical Load for UIUC

	Calendar Year 2009		Calendar Year 2010		Calendar Year 2011		Calendar Year 2012		Calendar Year 2013		Calendar Year 2014		Calendar Year 2015		Calendar Year 2016		Calendar Year 2017	
	Sum-09	Win-09	Sum-10	Win-10	Sum-11	Win-11	Sum-12	Win-12	Sum-13	Win-13	Sum-14	Win-14	Sum-15	Win-15	Sum-16	Win-16	Sum-17	Win-17
MISO Schedule E Data *	78	51	88	61	98	76	109	87	116	94	118	95	120	96	121	98	123	99
Load with PetaScale PII **	78	51	88	61	98	76	109	87	116	94	118	95	120	96	221	198	223	199
Growth Factors			10 MW Blue Waters	10 MW Blue Waters	4 MW Blue Waters		4 MW Blue Waters		5 MW Data Center		2 MW Campus Growth		2 MW Campus Growth	1 MW Campus Growth	1 MW Campus Growth	2 MW Campus Growth	2 MW Campus Growth	
							4 MW Data Center		2 MW Campus Growth						100 MW PetaScale Phase II			
							3 MW Campus Growth											

The factors/projects that were considered when developing the annual load growth are detailed above for each calendar year. Items highlighted in blue are scheduled to occur, items highlighted in orange are antipated based on historical data (50-80% probability), items highlighted in green have been proposed as possible projects (40-50% probability), and items highlighted in red have been discussed but are too far into the future to assess a probability.

* - The first load growth summary that is provided corresponds to the data provided in the MISO Schedule E data that was submitted by Prairieland Energy Inc. earlier this year.

** - The second load growth summary is a summary of the MISO Schedule E data and the PetaScale Phase II project load that is in discussion for 2016.

Champaign Area Transmission System Study

Exhibit 2
Load Forecast for the Champaign Area

	Actual	W.N.[1]	Projected Loads						2010-2015	
	2009 MW	2009 MW	2010 MW	2011 MW	2012 MW	2013 MW	2014 MW	2015 MW	Growth Rate (%)	2021 MW
Total Distribution Substations	363.3	403.8	418.1	429.6	440.1	449.1	458.5	468.1	2.3%	532.6
Total Large Customer Substations	111.8	111.8	124.0	134.0	145.0	152.0	154.0	156.0	4.7%	156.0
Total REA & Other Substations	12.7	13.9	14.1	14.4	14.6	14.8	15.1	15.4	1.7%	17.1
Area Total	487.8	529.5	556.3	578.0	599.7	616.0	627.6	639.5	2.8%	705.6

Notes:
(1) W.N. = Weather Normalized
All values based on Non-coincident totals.

Champaign Area Transmission System Study

Exhibit 3
Power Flow Diagram for the Champaign Area

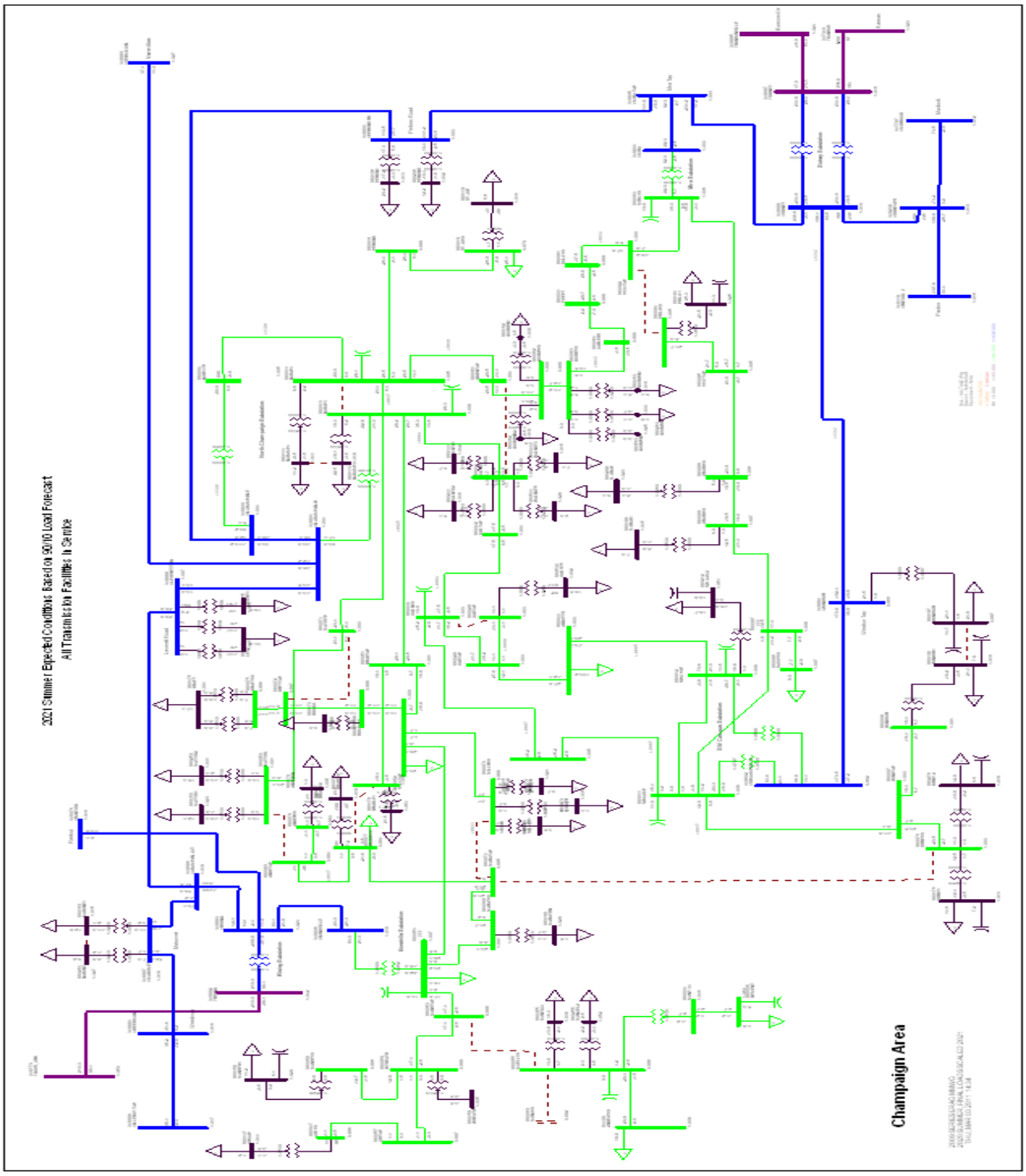

Champaign Area Transmission System Study

Exhibit 4
Total System Cost of Mitigation Options

New Facilities	New 138 kV Line from SW Campus to North Champaign	New 138 kV Line from SW Campus to Bondville	New 138 kV Line from SW Campus to Rising	New 138 kV Line from SW Campus to Mira Tap	New 138 kV Line from SW Campus to Sidney
New 6-Breaker 138 kV Ring Bus at SW Campus	$ 6,375,000				
New 138 kV 2000A Terminal at North Champaign	$ 640,000				
New 3.5 Mile 138 kV Line, SW Campus to North Champaign	$ 26,823,000				
New 138 kV 2000A Terminal at Rising	$ 760,000				
New 3-Breaker 138 kV Ring Bus at Bondville	$ 3,487,000				
New 3.5 Mile 138 kV Line, Rising to Bondville	$ 8,941,000				
New 138/69 kV 140 MVA Transformer at SW Campus	$ 3,500,000				
New Rising 345/138 kV Transformer	$ 4,150,000				
New 4-345 kV Breaker Ring Bus at Rising	$ 6,000,000				
New Straight 138 kV Bus with Tie and Transformer Breaker at Rising	$ 800,000				
New 6-Breaker 138 kV Ring Bus at SW Campus		$ 6,375,000			
New 3-Breaker 138 kV Ring Bus at Bondville		$ 3,487,000			
Add 3 lines Switches and Replace CS at Windsor		$ 250,000			
New 1.37 Mile 138 kV Line, SW Campus To Curtis Road		$ 5,577,000			
New 4.5 Mile 138 kV Line, Mattis Road to 345 kV ROW		$ 6,478,000			
New 3.0 Mile 138 kV Line, Bondville to Curtis Road		$ 12,602,000			
New 138/69 kV 140 MVA Transformer at SW Campus		$ 3,500,000			
New I-57 South 345/138 kV Transformer		$ 4,500,000			
New 3 Breaker 345 kV Ring Bus at I57 South		$ 6,500,000			
New 3-Breaker 138 kV Ring Bus at I57 South		$ 3,500,000			
New 6-Breaker 138 kV Ring Bus at SW Campus			$ 6,375,000		
New 4-breaker 138 kV Ring Bus at Bondville			$ 3,887,000		
Add 3 lines Switches and Replace CS at Windsor			$ 250,000		
New 1.37 Mile 138 kV Line, SW Campus To Curtis Road			$ 5,577,000		
New 4.5 Mile 138 kV Line, Mattis Road to 345 kV ROW			$ 6,478,000		
New 3.0 Mile 138 kV Line, Bondville to Curtis Road			$ 12,602,000		
New 138 kV 2000A Terminal at Rising			$ 760,000		
New 3.5 Mile 138 kV Line, Rising to Bondville			$ 8,941,000		
New 138/69 kV 140 MVA Transformer at SW Campus			$ 3,500,000		
New Rising 345/138 kV Transformer			$ 4,150,000		
New 4-345 kV Breaker Ring Bus at Rising			$ 6,000,000		
New Straight 138 kV Bus with Tie and Transformer Breaker at Rising			$ 800,000		
New 6-Breaker 138 kV Ring Bus at SW Campus				$ 6,375,000	
New 4-Breaker 138 kV Ring Bus at Mira Substation				$ 4,700,000	
New 4.75 Mile 138 kV Line, SW Campus to Mira Tap				$ 18,018,000	
New 138 kV 2000A Terminal at Rising				$ 760,000	
New 3-Breaker 138 kV Ring Bus at Bondville				$ 3,487,000	
New 3.5 Mile 138 kV Line, Rising to Bondville				$ 8,941,000	
New 138/69 kV 140 MVA Transformer at SW Campus				$ 3,500,000	
New Rising 345/138 kV Transformer				$ 4,150,000	
New 4-345 kV Breaker Ring Bus at Rising				$ 6,000,000	
New Straight 138 kV Bus with Tie and Transformer Breaker at Rising				$ 800,000	
New 6-Breaker 138 kV Ring Bus at SW Campus					$ 6,375,000
New 138 kV 2000A Terminal at Sidney					$ 730,000
New 15 Mile 138 kV Line, SW Campus to Sidney					$ 39,287,000
New 138/69 kV 140 MVA Transformer at SW Campus					$ 3,500,000
New Rising 345/138 kV Transformer					$ 4,150,000
New 4-345 kV Breaker Ring Bus at Rising					$ 6,000,000
New Straight 138 kV Bus with Tie and Transformer Breaker at Rising					$ 800,000
Option Cost	$ 61,000,000	$ 53,000,000	$ 59,000,000	$ 57,000,000	$ 61,000,000
System Upgrades	$ -	$ -	$ -	$ -	$ -
Total System Costs	**$ 61,000,000**	**$ 53,000,000**	**$ 59,000,000**	**$ 57,000,000**	**$ 61,000,000**

Champaign Area Transmission System Study

Exhibit 5
New North Champaign to Southwest Campus 138 kV Line

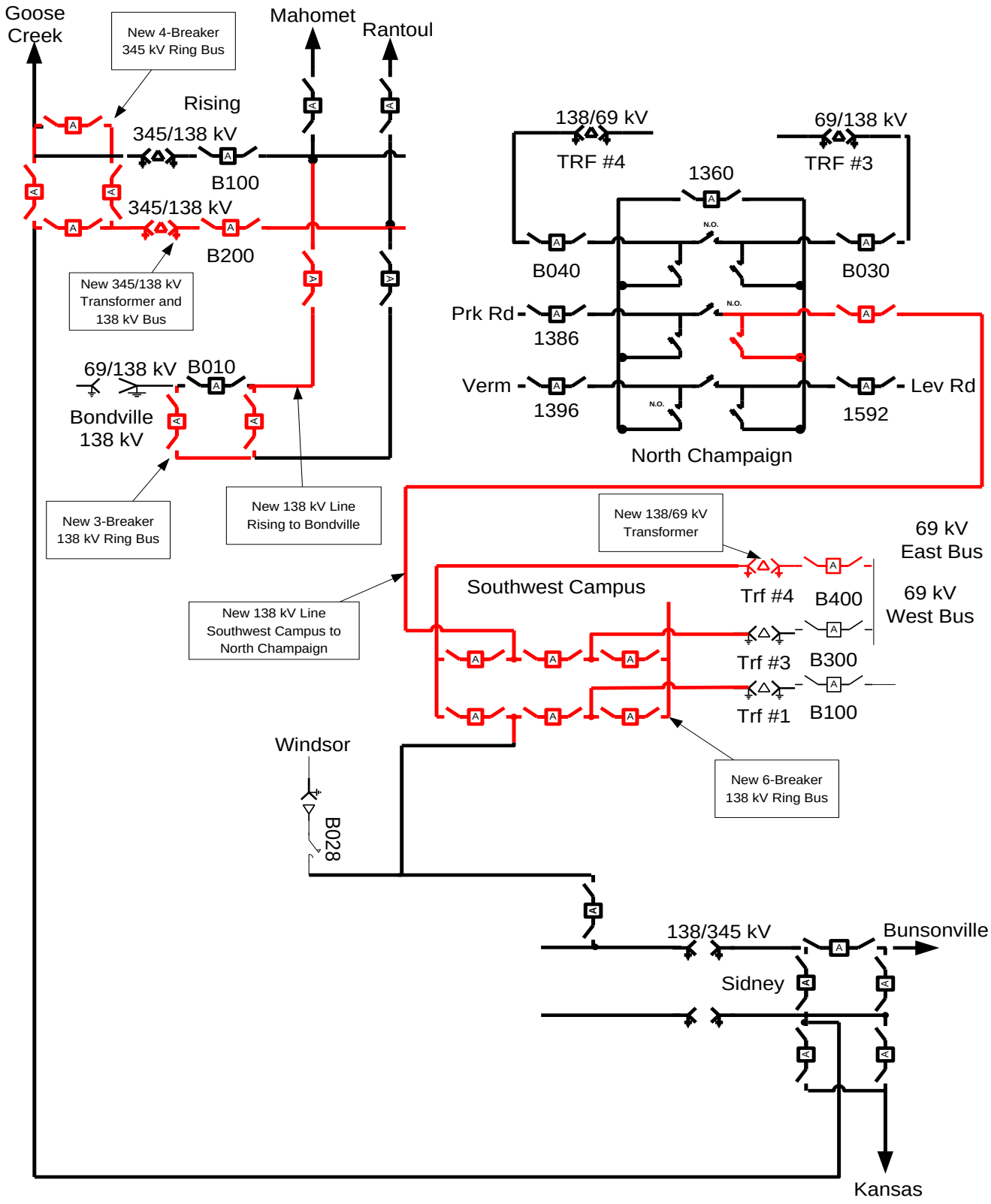

Champaign Area Transmission System Study

Exhibit 6
New Bondville to Southwest Campus 138 kV Line

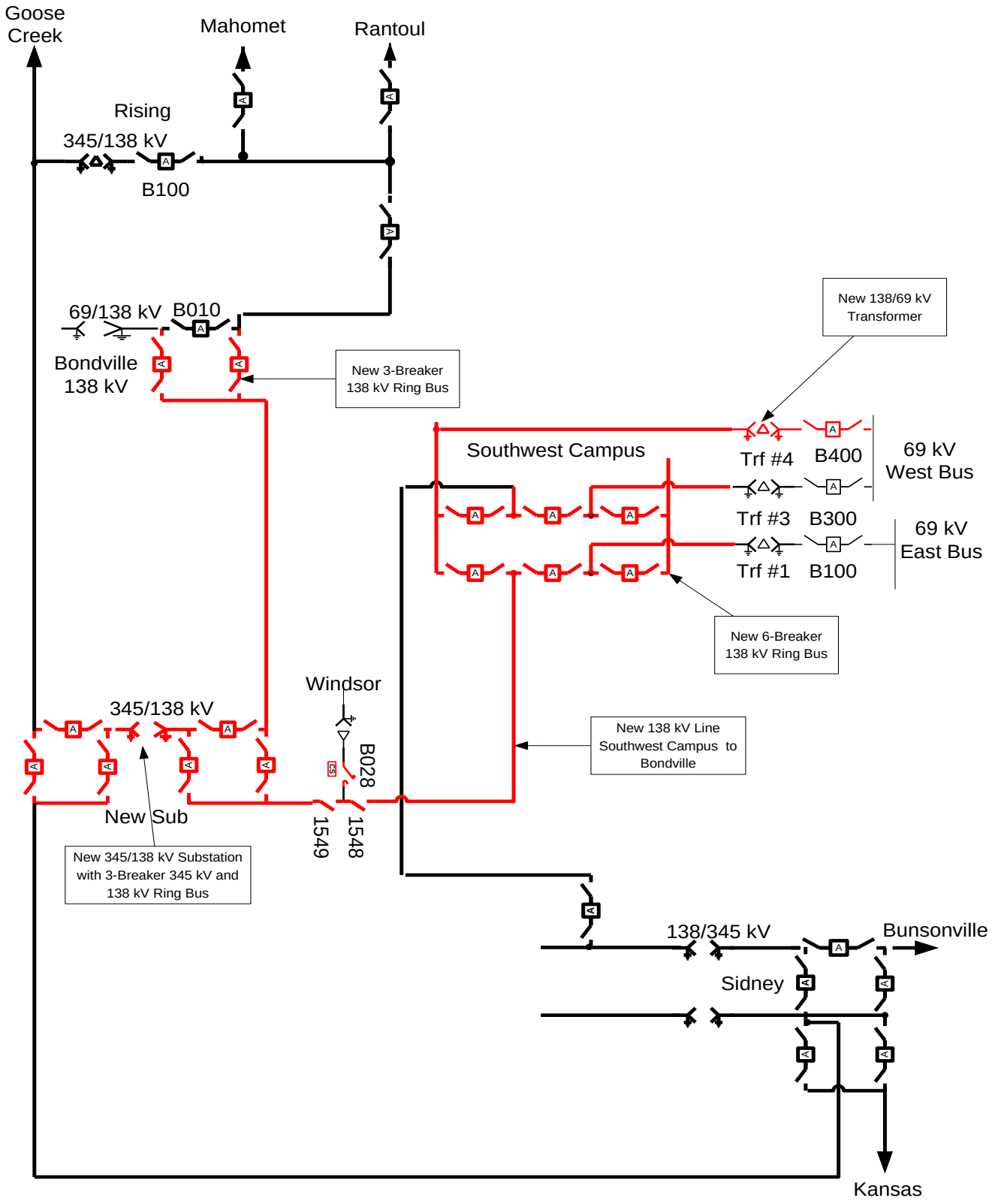

Champaign Area Transmission System Study

Exhibit 7
New Rising to Southwest Campus 138 kV Line

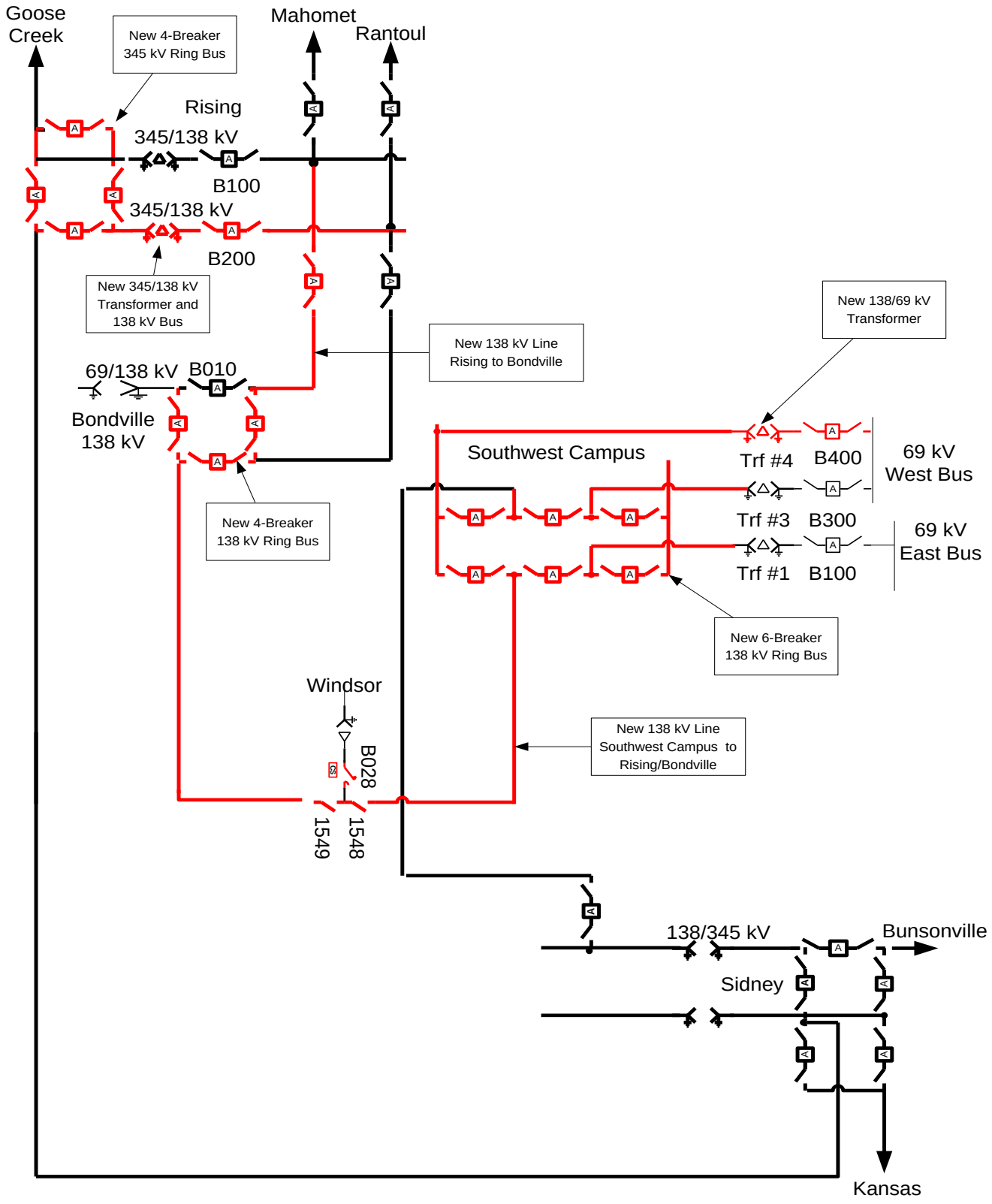

Champaign Area Transmission System Study

Exhibit 8
New Mira to Southwest Campus 138 kV Line

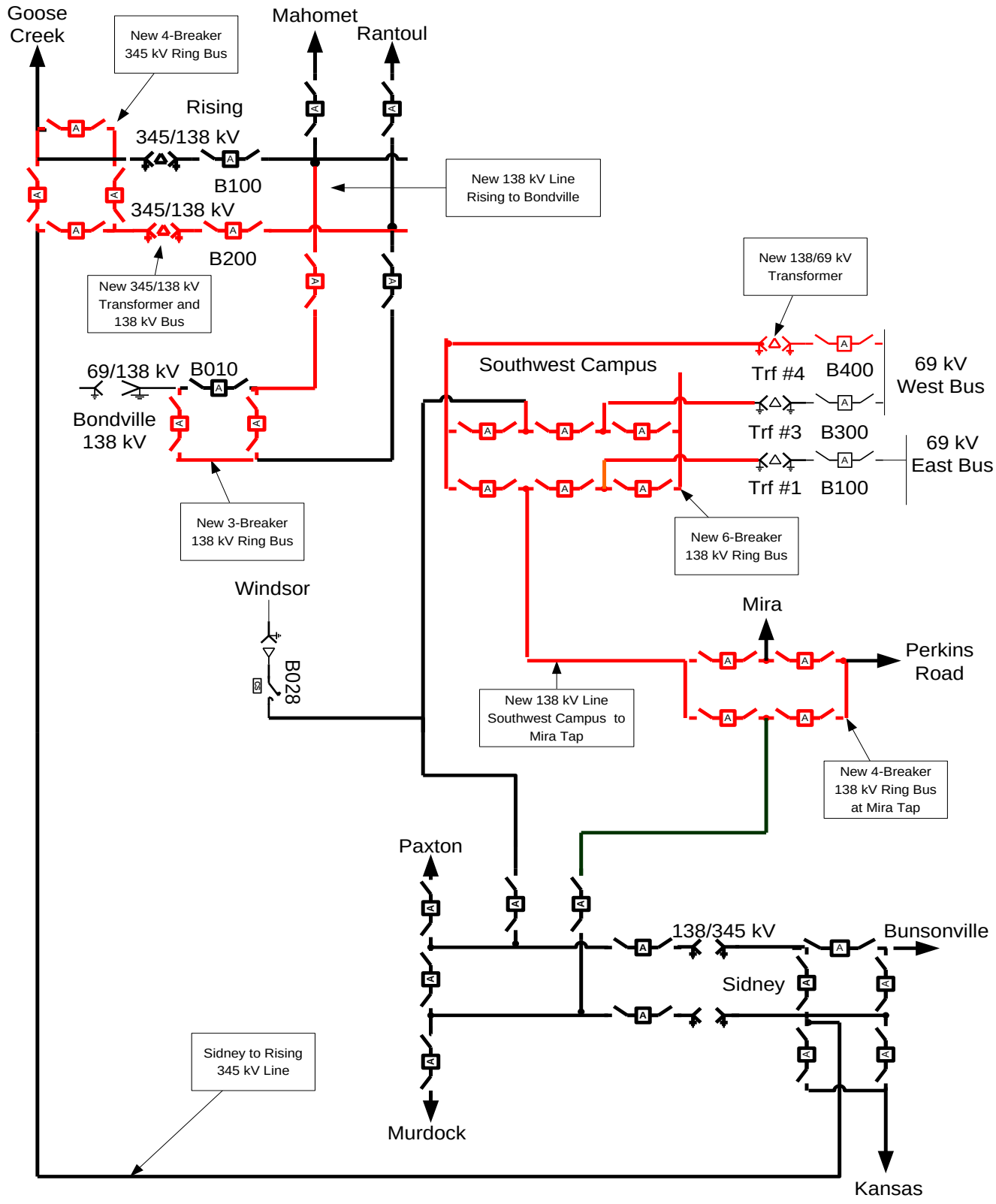

Champaign Area Transmission System Study

Exhibit 9
New Sidney to Southwest Campus 138 kV Line

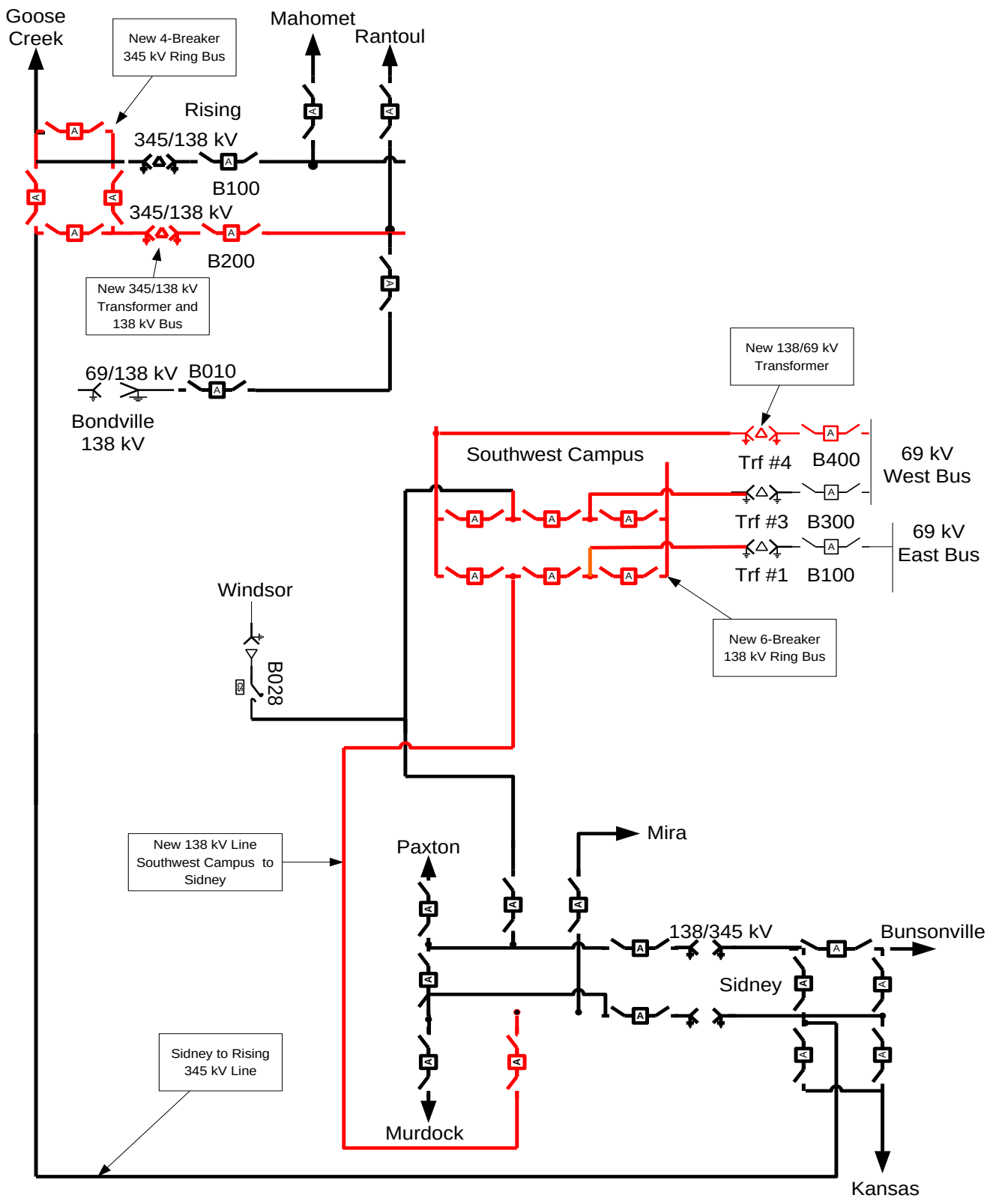

Champaign Area Transmission System Study

Exhibit 10
New 138/69 kV Transformers at the Champaign Bulk Supply Substations

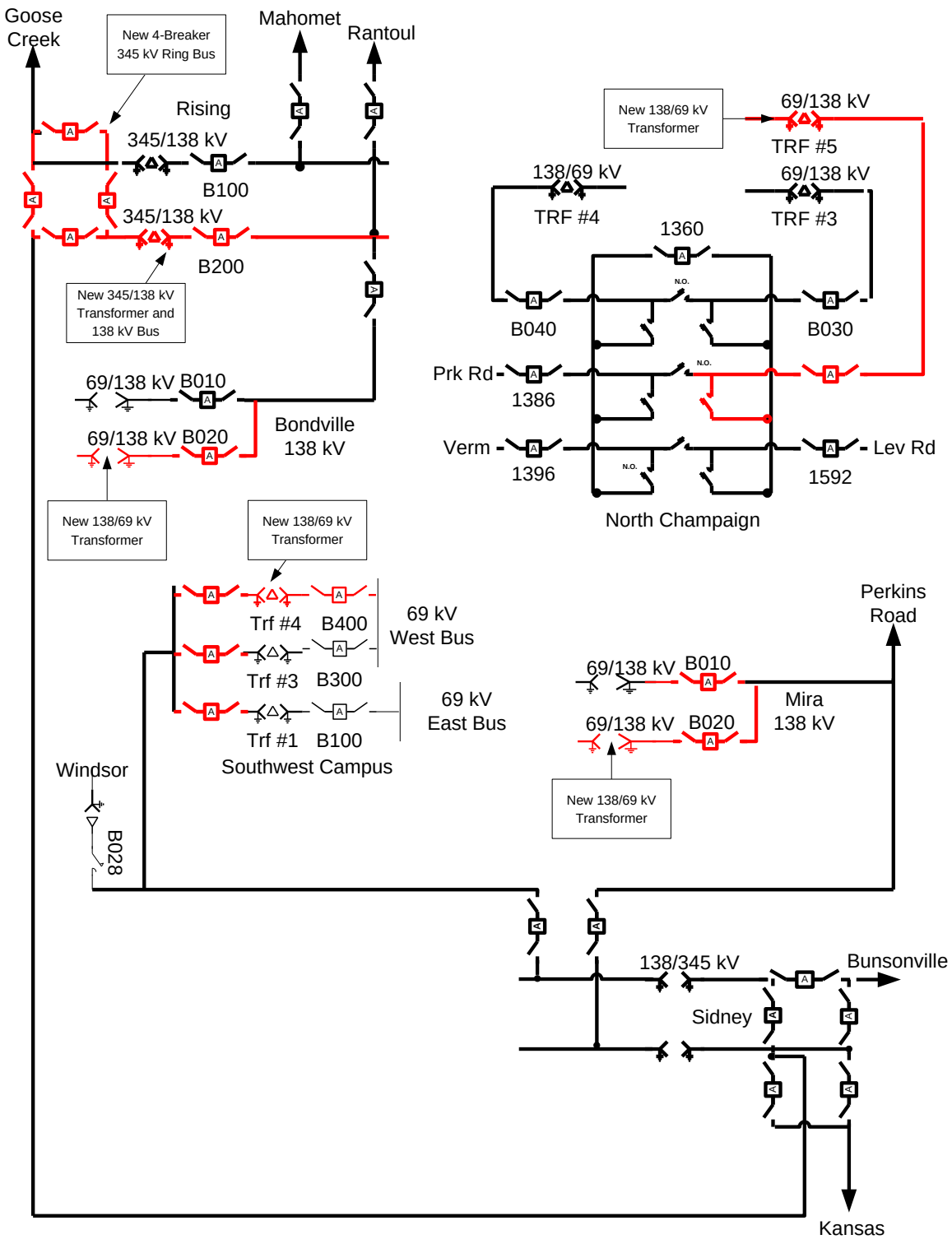

Champaign Area Transmission System Study

Exhibit 11
Recent Load Forecast for the Champaign Area

	Actual	W.N.[1]	Projected Loads					2010-2015	
	2010 MW	2010 MW	2011 MW	2012 MW	2013 MW	2014 MW	2015 MW	Growth Rate (%)	2021 MW
Total Distribution Substations	378.19	397.5	408.8	419.0	427.8	436.8	446.2	2.2%	509.2
Total Large Customer Substations	112.7	112.7	138.0	149.0	156.0	158.0	160.0	3.8%	160.0
Total REA & Other Substations	14.5	15.5	16.7	17.0	17.3	17.6	18.0	1.9%	20.2
Area Total	505.4	525.7	563.5	585.0	601.1	612.5	624.2	2.6%	689.4
Area Total (UI = 60 MW)	505.4	525.7	525.5	536.0	545.1	554.5	564.2		

Notes:
(1) W.N. = Weather Normalized.
All values based on Non-coincident totals.