PLAN MUST NOT BE MODIFIED WITHOUT APPROVAL OF SIGNAL ENGINEERING COPYRIGHT 2011 BNSF RAILWAY COMPANY. ALL RIGHTS RESERVED.

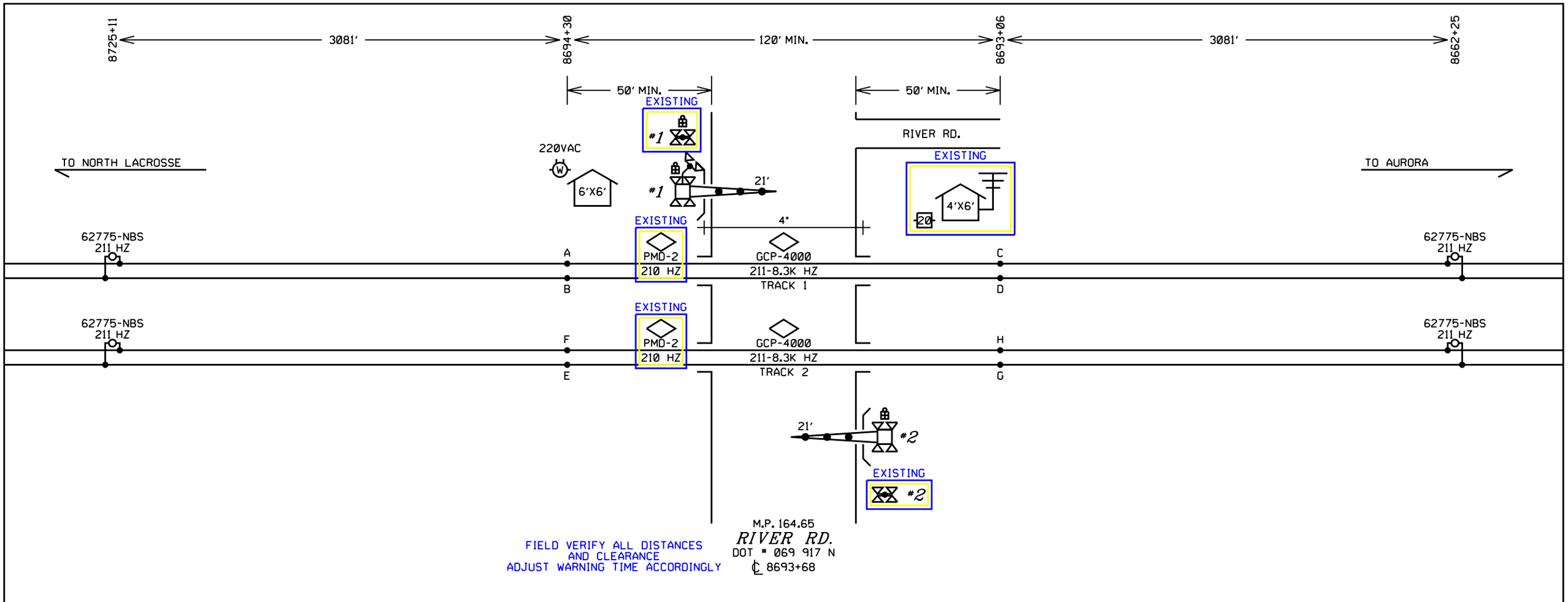


PLEASE DESTROY PREVIOUS PLANS FOR M.P. 164.65 DATED APRIL 22, 1997

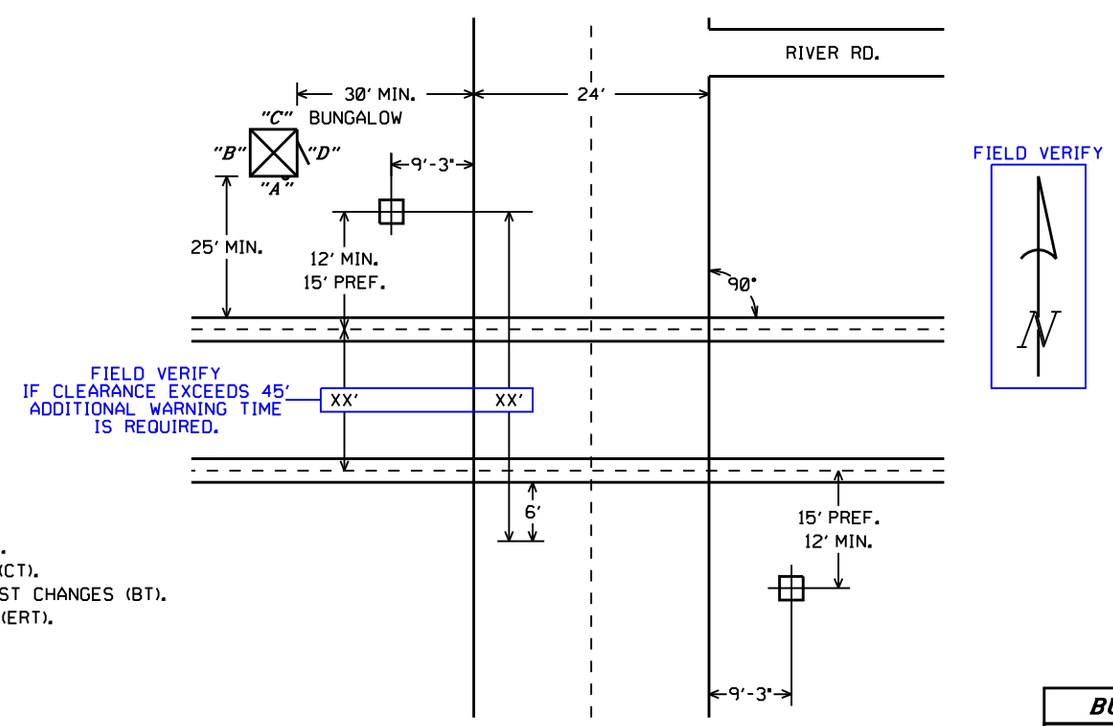


FOUNDATION PLACEMENT SKETCH
NOT TO SCALE




NOTES:

- -TEST TERMINAL
- -EQUALIZER
- -LINE ARRESTER
- -HEAVY DUTY ARRESTER
- -TWISTED WIRE 2 TURNS PER FOOT
- -CONNECTION TO REC./RTU

ALL WIRES #16 AWG UNLESS OTHERWISE NOTED

NOTES:

EQUIPMENT IS DESIGNED FOR 20 SECONDS MINIMUM WARNING TIME AT 60 MPH.
APPROACHES WERE LENGTHENED 1 SECOND(S) FOR WIDE OR ANGLED CROSSING (CT).
APPROACHES WERE LENGTHENED 10 SECONDS FOR SPEED VARIANCE AND BALLAST CHANGES (BT).
APPROACHES WERE LENGTHENED 4 SECONDS FOR EQUIPMENT RESPONSE TIME (ERT).
ALL LAMPS TO BE LED
GATE LENGTH SHOWN IS MEASURED FROM MAST C/L TO GATE TIP.

ALL NEW

DESIGNED 09-01-11
INSTALL NEW XING
RSS/JML SEQ.# 46810

**BURLINGTON NORTHERN SANTA FE RAILWAY**

CROSSING CIRCUIT PLAN
RIVER RD. HANOVER, IL

LS 0003 | MP 164.65 | SH 01 OF 12

PLAN MUST NOT BE MODIFIED WITHOUT APPROVAL OF SIGNAL ENGINEERING COPYRIGHT 2011 BNSF RAILWAY COMPANY. ALL RIGHTS RESERVED.

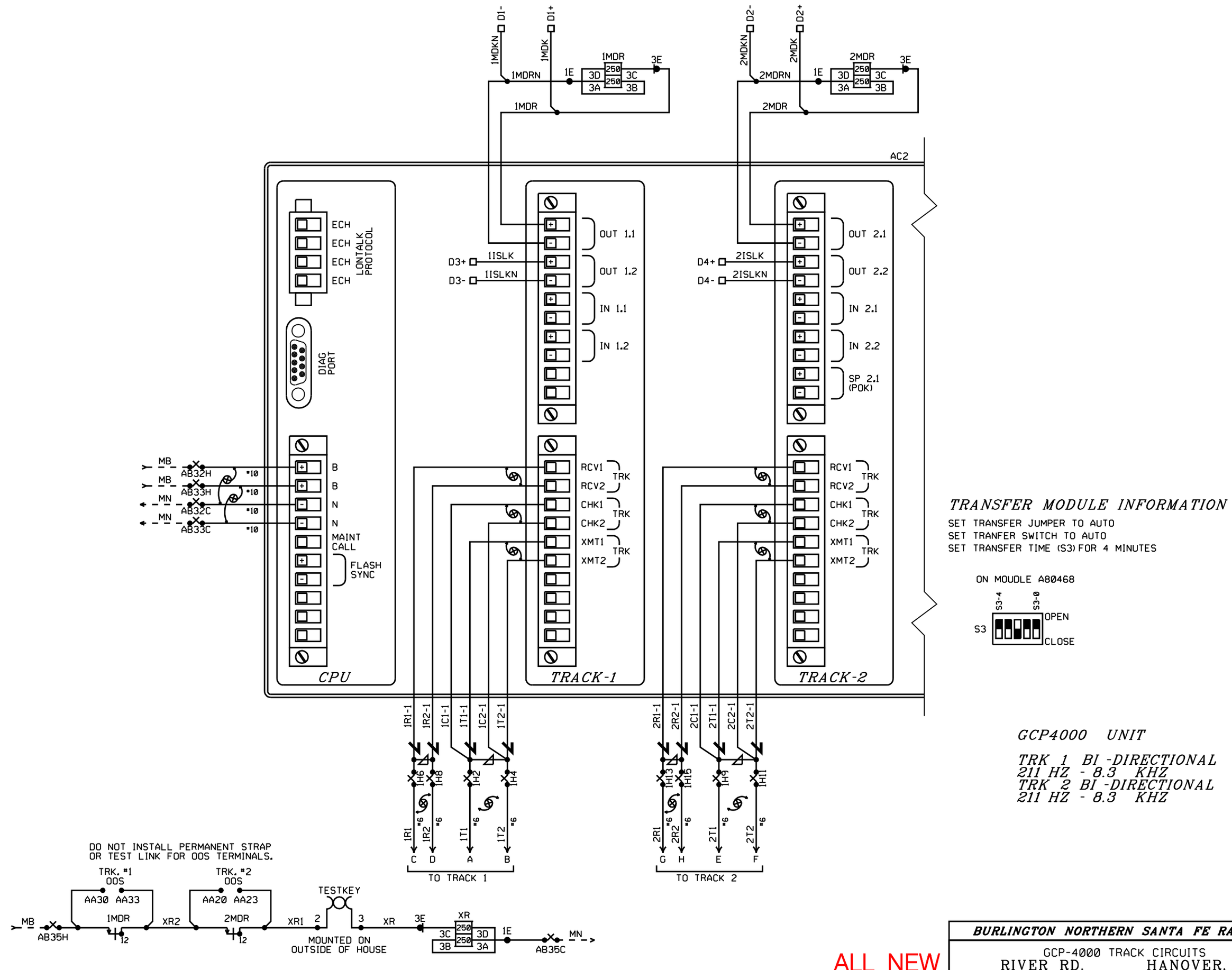


ALL NEW

DESIGNED 09-01-11
INSTALL NEW XING
RSS/JML SEQ.# 46810

**BURLINGTON NORTHERN SANTA FE RAILWAY**

GCP-4000 TRACK CIRCUITS
RIVER RD. HANOVER, IL

| LS 0003 | MP 164.65 | SH 02 OF 12 |
|---|---|---|

PLAN MUST NOT BE MODIFIED WITHOUT APPROVAL OF SIGNAL ENGINEERING COPYRIGHT 2011 BNSF RAILWAY COMPANY. ALL RIGHTS RESERVED.

Program Report
---

Location and SIN
---
DOT Number: 069917N
Milepost Number: 164.65
Site Name: RIVER RD

SIN: 762010010016

MCF and Template Selection
---
MCF Name: GCP-T6X-02-1.mcf
MCF Revision: 021
MCFCRC: 6076E435

Template = 1A:6 Trk Bi

Check Numbers
---
Office Check No. (DT 4.6.0): 7CFAF429
Office Check Number: 7CFAF429
Config. Check Number: 01DAD252
(Based on MCF Revision 021)

Program
---
BASIC: module configuration
Track 1 Slot = Track
Track 2/RIO 1 Slot = Track
Track 3 Slot = Not Used
Track 4 Slot = Not Used
Track 5/RIO 2 Slot = Not Used
Track 6/RIO 3 Slot = Not Used
SSCC-1 Slot = Not Used
SSCC-2 Slot = Not Used
SEAR Used = No

BASIC: MS/GCP operation
Track 1 : MS/GCP Operation = Yes
Track 2 : MS/GCP Operation = Yes

BASIC: island operation
Track 1 : Island Used = Internal
Track 2 : Island Used = Internal

BASIC: preemption
Preempt Logic = No

BASIC: radio Dax links
Radio DAX link A Used = No
Radio DAX link B Used = No

BASIC: Vital Comms links
Vital Comms link 1 Used = No
Vital Comms link 2 Used = No

PREDICTORS: track 1
Track 1 : Prime Used = Yes
Track 1 : Dax A Used = No
Track 1 : Dax B Used = No
Track 1 : Dax C Used = No
Track 1 : Dax D Used = No
Track 1 : Dax E Used = No
Track 1 : Dax F Used = No
Track 1 : Dax G Used = No

PREDICTORS: track 2
Track 2 : Prime Used = Yes
Track 2 : Dax A Used = No
Track 2 : Dax B Used = No
Track 2 : Dax C Used = No
Track 2 : Dax D Used = No
Track 2 : Dax E Used = No
Track 2 : Dax F Used = No
Track 2 : Dax G Used = No

GCP: track 1
Track 1 : GCP Freq Category = Standard
Track 1 : GCP Frequency = 211 Hz
Track 1 : Approach Distance = 3081 ft
Track 1 : Uni/Bi/Sim-Bidirnl = Bidirnl
Track 1 : GCP Transmit Level = Medium
Track 1 : Island Connection = Isl 1
Track 1 : Island Distance = 124 ft
Track 1 : Computed Distance = 9999 ft
Track 1 : Linearization Steps = 100

GCP: track 1 enhanced det
Track 1 : Inbound PS Sensitivity = High
Track 1 : Speed Limiting Used = Yes
Track 1 : Outbound False Act Lvl = Normal
Track 1 : Outbound PS Timer = 20 sec
Track 1 : Trailing Switch Logic = On
Track 1 : Post Joint Detn Time = 15 sec
Track 1 : Adv Appr Predn = No
Track 1 : Cancel Pickup Delay = This Isl

GCP: track 1 prime
Track 1 : Prime Warning Time = 31 sec
Track 1 : Prime Offset Distance = 0 ft
Track 1 : Switch MS EZ Level = 10
Track 1 : Prime MS/GCP Mode = Pred
Track 1 : Prime Pickup Delay = 15 sec
Track 1 : Prime UAX = Not Used

GCP: track 1 pos start
Track 1 : Positive Start = Off
Track 1 : Sudden Shnt Det Used = No
Track 1 : Low EZ Detection Used = No

GCP: track 1 MS Control
Track 1 : MS/GCP Ctrl IP Used = No
Track 1 : MS Sensitivity Level = 0
Track 1 : Compensation Level = 1300
Track 1 : Warn Time-Ballast Comp = High
Track 1 : Low EX Adjustment = 39
Track 1 : Bidirn Dax Passthru = No
Track 1 : False Act on Train Stop = No
Track 1 : EX Limiting Used = Yes
Track 1 : EZ Correction Used = Yes

GCP: track 2
Track 2 : GCP Freq Category = Standard
Track 2 : GCP Frequency = 211 Hz
Track 2 : Approach Distance = 3081 ft
Track 2 : Uni/Bi/Sim-Bidirnl = Bidirnl
Track 2 : GCP Transmit Level = Medium
Track 2 : Island Connection = Isl 2
Track 2 : Island Distance = 124 ft
Track 2 : Computed Distance = 9999 ft
Track 2 : Linearization Steps = 100

GCP: track 2 enhanced det
Track 2 : Inbound PS Sensitivity = High
Track 2 : Speed Limiting Used = Yes
Track 2 : Outbound False Act Lvl = Normal
Track 2 : Outbound PS Timer = 20 sec
Track 2 : Trailing Switch Logic = On
Track 2 : Post Joint Detn Time = 15 sec
Track 2 : Adv Appr Predn = No
Track 2 : Cancel Pickup Delay = This Isl

GCP: track 2 prime
Track 2 : Prime Warning Time = 31 sec
Track 2 : Prime Offset Distance = 0 ft
Track 2 : Switch MS EZ Level = 10
Track 2 : Prime MS/GCP Mode = Pred
Track 2 : Prime Pickup Delay = 15 sec
Track 2 : Prime UAX = Not Used

GCP: track 2 pos start
Track 2 : Positive Start = Off
Track 2 : Sudden Shnt Det Used = No
Track 2 : Low EZ Detection Used = No

GCP: track 2 MS Control
Track 2 : MS/GCP Ctrl IP Used = No
Track 2 : MS Sensitivity Level = 0
Track 2 : Compensation Level = 1300
Track 2 : Warn Time-Ballast Comp = High
Track 2 : Low EX Adjustment = 39
Track 2 : Bidirn Dax Passthru = No
Track 2 : False Act on Train Stop = No
Track 2 : EX Limiting Used = Yes
Track 2 : EZ Correction Used = Yes

ISLAND: track 1
Track 1 : Isl Frequency = 8.3 kHz
Track 1 : Pickup Delay (2s +) = 0 sec
Track 1 : Isl Enable IP Used = No

ISLAND: track 2
Track 2 : Isl Frequency = 8.3 kHz
Track 2 : Pickup Delay (2s +) = 0 sec
Track 2 : Isl Enable IP Used = No

AND: track Anding
AND 1 XR Used = Yes
AND 2 Used = No
AND 3 Used = No
AND 4 Used = No
AND 5 Used = No
AND 6 Used = No
AND 7 Used = No
AND 8 Used = No

AND: AND 1 XR
AND 1 XR Track 1 = Prime
AND 1 XR Track 2 = Prime
AND 1 Enable Used = No
AND 1 Wrap Used = No

ADVANCED: MS restart
MS/GCP Restart Used = No

ADVANCED: out of service
OOS Control = Display
OOS Timeout = Yes
OOS Timeout = 1 hrs

ADVANCED: track wrap circuits
Wrap LOS Timer = 5 sec
Track 1 Wrap Used = No
Track 2 Wrap Used = No

ADVANCED: trk 1 overrides
Track 1 : All Predictors Override Used = No

ADVANCED: trk 2 overrides
Track 2 : All Predictors Override Used = No

ADVANCED: OR logic
OR 1 Used = No
OR 2 Used = No
OR 3 Used = No
OR 4 Used = No

ADVANCED: internal I/O 1
Pass Thrus = No
Int.1 Sets = Not Used
Int.1 Set by = Not Used
Int.2 Sets = Not Used
Int.2 Set by = Not Used
Int.3 Sets = Not Used
Int.3 Set by = Not Used
Int.4 Sets = Not Used
Int.4 Set by = Not Used

ADVANCED: internal I/O 2
Int.5 Sets = Not Used
Int.5 Set by = Not Used
Int.6 Sets = Not Used
Int.6 Set by = Not Used
Int.7 Sets = Not Used
Int.7 Set by = Not Used
Int.8 Sets = Not Used
Int.8 Set by = Not Used

ADVANCED: internal I/O 3
Int.9 Sets = Not Used
Int.9 Set by = Not Used
Int.10 Sets = Not Used
Int.10 Set by = Not Used
Int.11 Sets = Not Used
Int.11 Set by = Not Used
Int.12 Sets = Not Used
Int.12 Set by = Not Used

ADVANCED: internal I/O 4
Int.13 Sets = Not Used
Int.13 Set by = Not Used
Int.14 Sets = Not Used
Int.14 Set by = Not Used
Int.15 Sets = Not Used
Int.15 Set by = Not Used
Int.16 Sets = Not Used
Int.16 Set by = Not Used

ADVANCED: site options
Daylight Savings = Off
Units = Standard
Maint Call Rpt IP Used = No
Emergency Activate IP = No
EZ/EX Logging = Change
EZ/EX Point Change = 3

OUTPUT: assignment page 1
OUT 1.1 = T1 Prime
OUT 1.2 = T1 Island
OUT 2.1 = T2 Prime
OUT 2.2 = T2 Island

INPUT: assignment page 1
IN 1.1 = Not Used
IN 1.2 = Not Used
IN 2.1 = Not Used
IN 2.2 = Not Used

SITE: programming
Radio Subnode = 1
Field Password = Off
Low Battery Enabled = Off

Configuration Package File
---
Filename: Config-069917N.pac
Path: G:\Projects\SEO 46810 River Rd\GCP4000 Program\
Date/Time: 9/07/2011 12:01:04
DT Version: 4.7.5

FIELD VERIFY ALL DISTANCES
AND ADJUST UNIT ACCORDINGLY

ALL NEW

GCP4000 PROGRAM NOTE:
THIS SHEET CONTAINS ONLY THE MINIMUM PROGRAM STEPS NEEDING MODIFIED FROM THE DEFAULT PROGRAM.
OR
THIS SHEET CONTAINS ALL PROGRAM NOTES.

**BURLINGTON NORTHERN SANTA FE RAILWAY**

GCP-4000 PROGRAM INFORMATION
RIVER RD. HANOVER, IL

DESIGNED 09-01-11
INSTALL NEW XING
RSS/JML SEQ.# 46810

LS 0003 | MP 164.65 | SH 03 OF 12

PLAN MUST NOT BE MODIFIED WITHOUT APPROVAL OF SIGNAL ENGINEERING

COPYRIGHT 2011 BNSF RAILWAY COMPANY. ALL RIGHTS RESERVED.

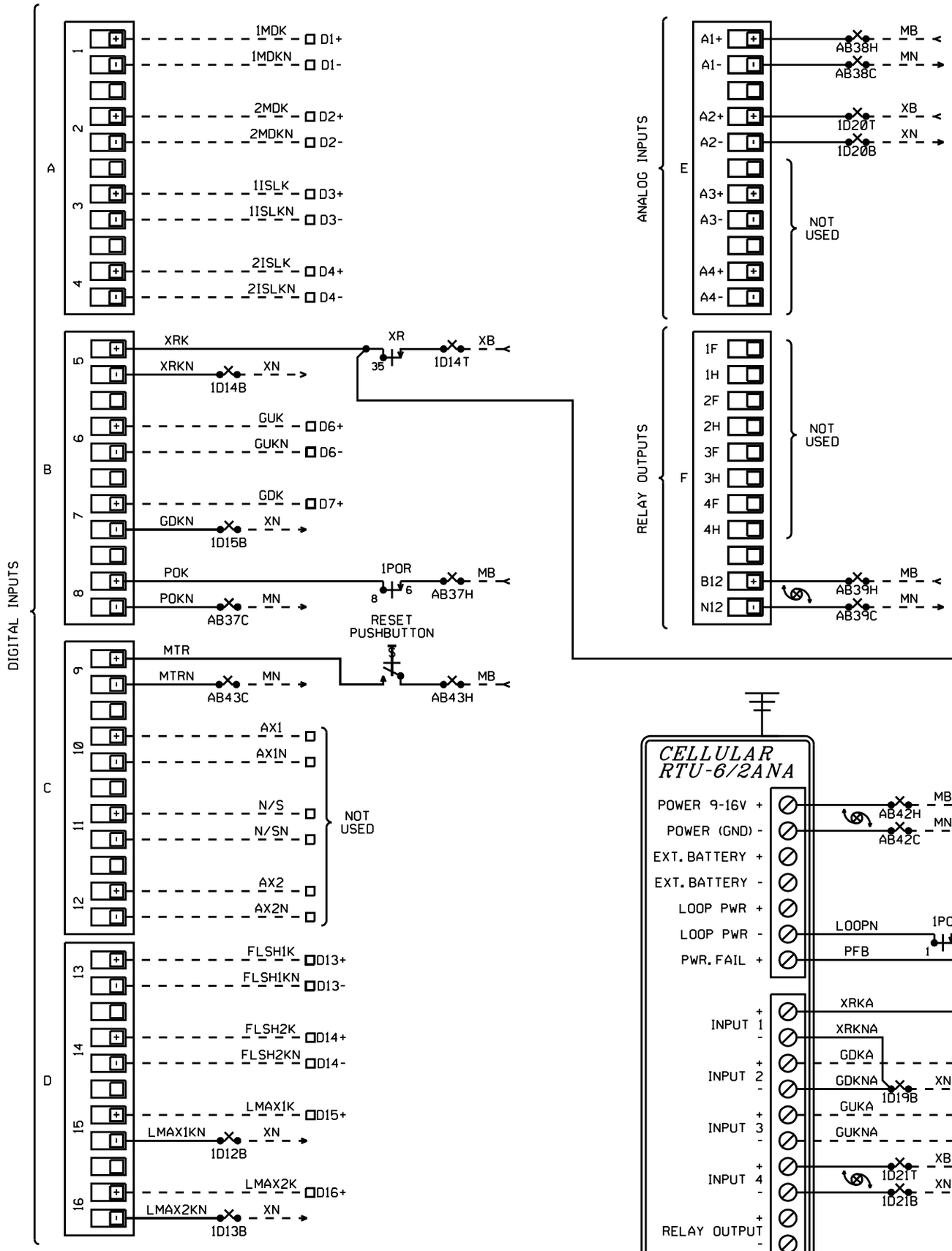


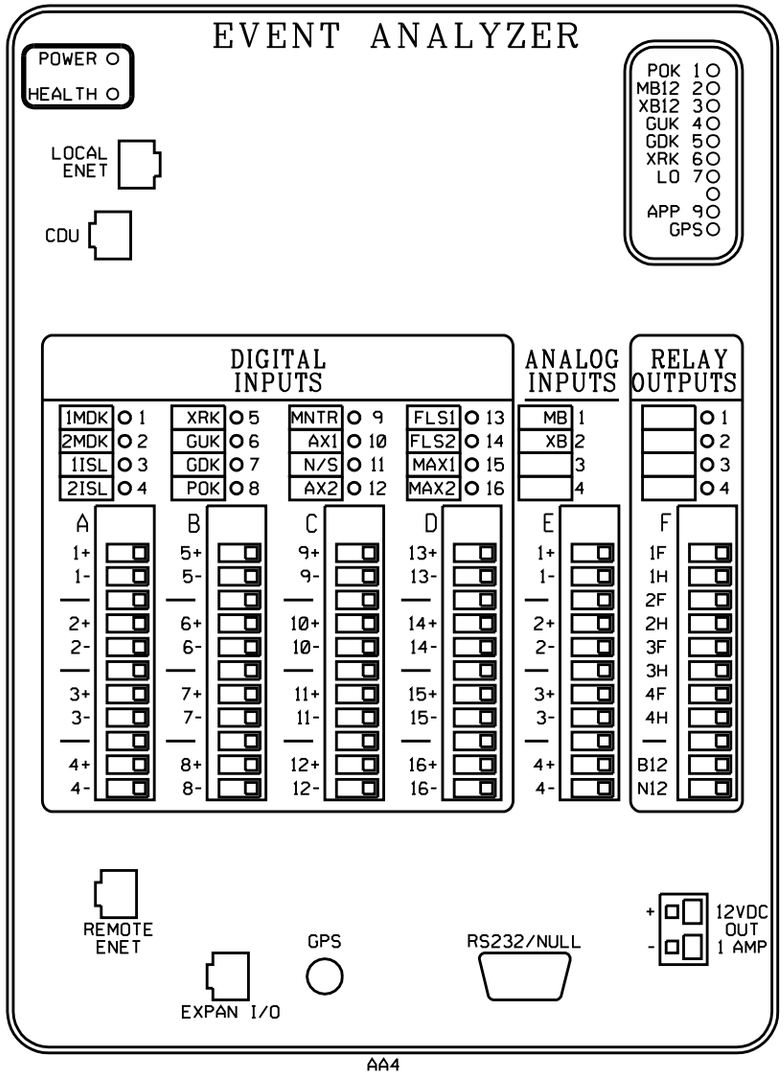


## BNSF 1.0 APPLICATION CONFIGURATION INFORMATION DIGITAL INPUTS

| INPUT NO. | INPUT DESCRIPTIVE NAME | ID |
|---|---|---|
| 1 | MOTION DETECTOR #1 | 1MDK |
| 2 | MOTION DETECTOR #2 | 2MDK |
| 3 | ISLAND #1 | 1ISLK |
| 4 | ISLAND #2 | 2ISLK |
| 5 | CROSSING RELAY | XRK |
| 6 | GATES UP | GUK |
| 7 | GATES DOWN | GDK |
| 8 | AC POWER | POK |
| 9 | MAINTAINER SWITCH | MTR |
| 10 | AUX INPUT 1 | AX1 |
| 11 | NORMAL/STANDBY | N/S |
| 12 | AUX INPUT 2 | AX2 |
| 13 | FLASHING LIGHTS 1 | FLSH1 |
| 14 | FLASHING LIGHTS 2 | FLSH2 |
| 15 | LOD MAX INPUT 1 | LMAX1 |
| 16 | LOD MAX INPUT 2 | LMAX2 |

BNSF STANDARD CONFIGURATION 32

ALL NEW

DESIGNED 09-01-11
INSTALL NEW XING
RSS/JML SEQ.# 46810

**BURLINGTON NORTHERN SANTA FE RAILWAY**

RECORDER CIRCUITS
RIVER RD. HANOVER, IL

LS 0003 | MP 164.65 | SH 04 OF 12

PLAN MUST NOT BE MODIFIED WITHOUT APPROVAL OF SIGNAL ENGINEERING COPYRIGHT 2011 BNSF RAILWAY COMPANY. ALL RIGHTS RESERVED.

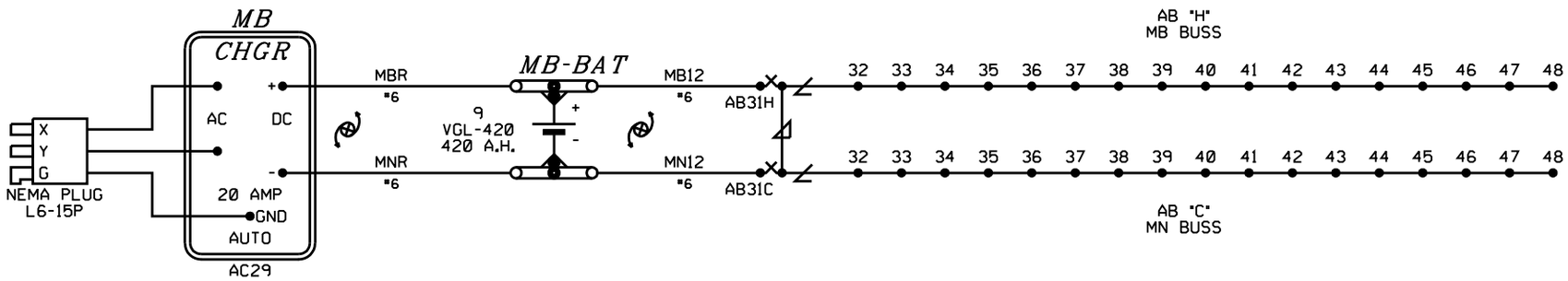


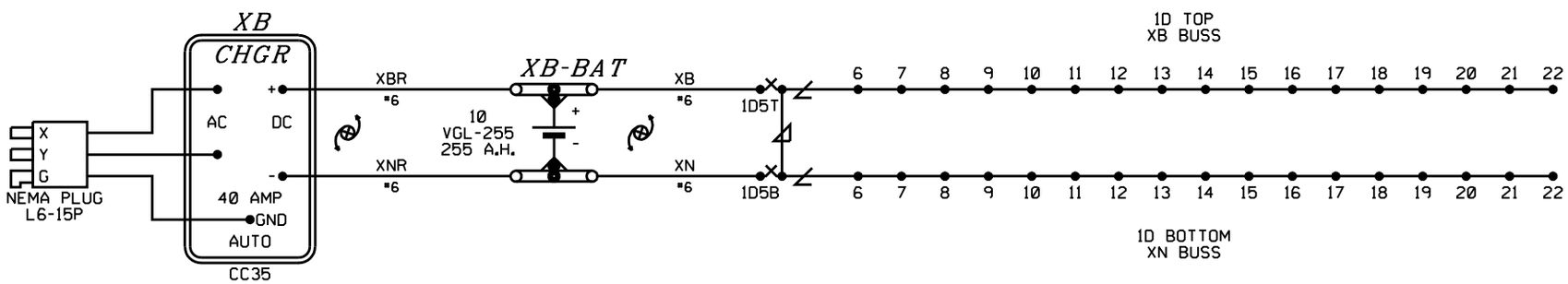


ALL NEW

DESIGNED 09-01-11
INSTALL NEW XING
RSS/JML SEQ.# 46810

**BURLINGTON NORTHERN SANTA FE RAILWAY**

BATTERY CIRCUITS
RIVER RD. HANOVER, IL

LS 0003 | MP 164.65 | SH 05 OF 12

PLAN MUST NOT BE MODIFIED WITHOUT APPROVAL OF SIGNAL ENGINEERING COPYRIGHT 2011 BNSF RAILWAY COMPANY. ALL RIGHTS RESERVED.

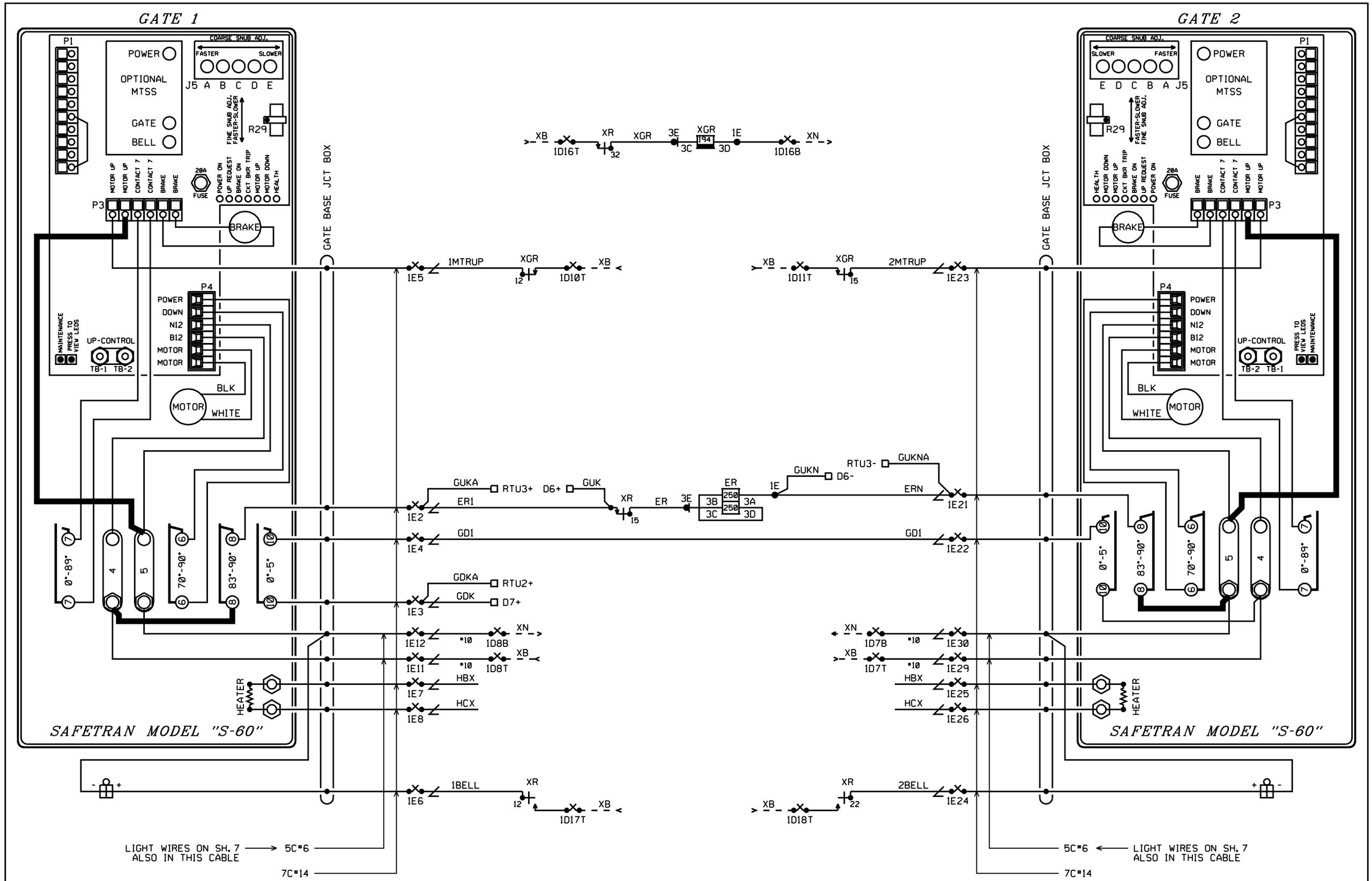


NOTES:

1. ADD JUMPERS IN GATE SHOWN IN BOLD.
2. MAXIMUM WIRE SIZE FOR TERMINAL 5 TO MOTOR UP CONTROL (-) IS #12 AWG.

ALL NEW

DESIGNED 09-01-11
INSTALL NEW XING
RSS/JML SEQ.# 46810

**BURLINGTON NORTHERN SANTA FE RAILWAY**

GATE CIRCUIT PLAN
RIVER RD. HANOVER, IL

| LS | MP | SH |
|---|---|---|
| 0003 | 164.65 | 06 OF 12 |

PLAN MUST NOT BE MODIFIED WITHOUT APPROVAL OF SIGNAL ENGINEERING COPYRIGHT 2011 BNSF RAILWAY COMPANY. ALL RIGHTS RESERVED.

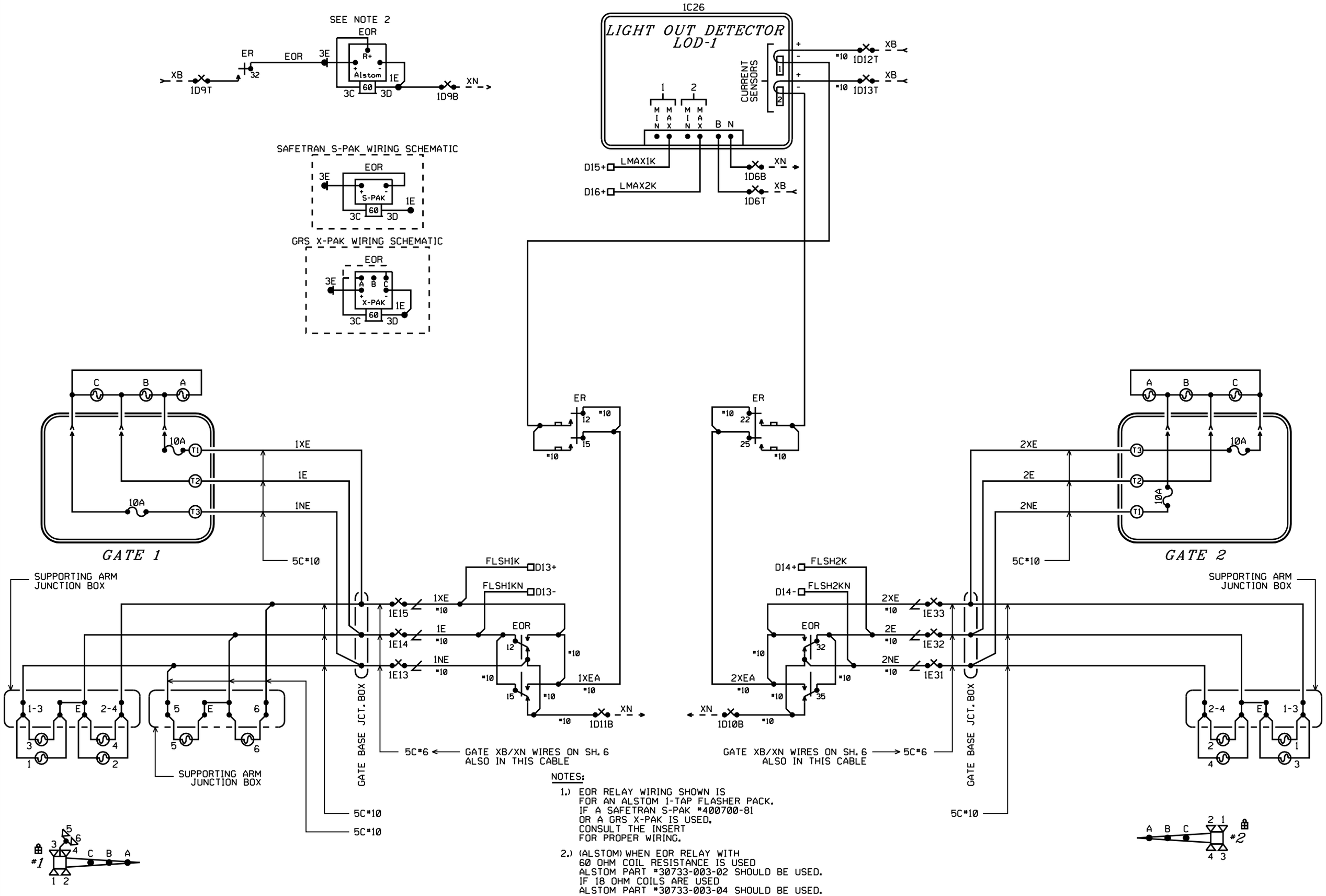


NOTES:

1.) EOR RELAY WIRING SHOWN IS FOR AN ALSTOM 1-TAP FLASHER PACK. IF A SAFETRAN S-PAK #400700-81 OR A GRS X-PAK IS USED, CONSULT THE INSERT FOR PROPER WIRING.

2.) (ALSTOM) WHEN EOR RELAY WITH 60 OHM COIL RESISTANCE IS USED ALSTOM PART #30733-003-02 SHOULD BE USED. IF 18 OHM COILS ARE USED ALSTOM PART #30733-003-04 SHOULD BE USED.

3.) (X-PAK) WHEN EOR RELAY WITH 60 OHM COIL RESISTANCE IS USED CONNECT JUMPER FROM 3C TO "A". IF 18 OHM COILS ARE USED CONNECT JUMPER FROM 3C TO "C".

4.) (S-PAK) DO NOT USE S-PAK WITH 18 OHM COILS

ALL NEW

DESIGNED 09-01-11
INSTALL NEW XING
RSS/JML SEQ.# 46810

**BURLINGTON NORTHERN SANTA FE RAILWAY**

FLASHER CIRCUIT PLAN
RIVER RD. HANOVER, IL

LS 0003 | MP 164.65 | SH 07 OF 12

PLAN MUST NOT BE MODIFIED WITHOUT APPROVAL OF SIGNAL ENGINEERING

COPYRIGHT 2011 BNSF RAILWAY COMPANY. ALL RIGHTS RESERVED.

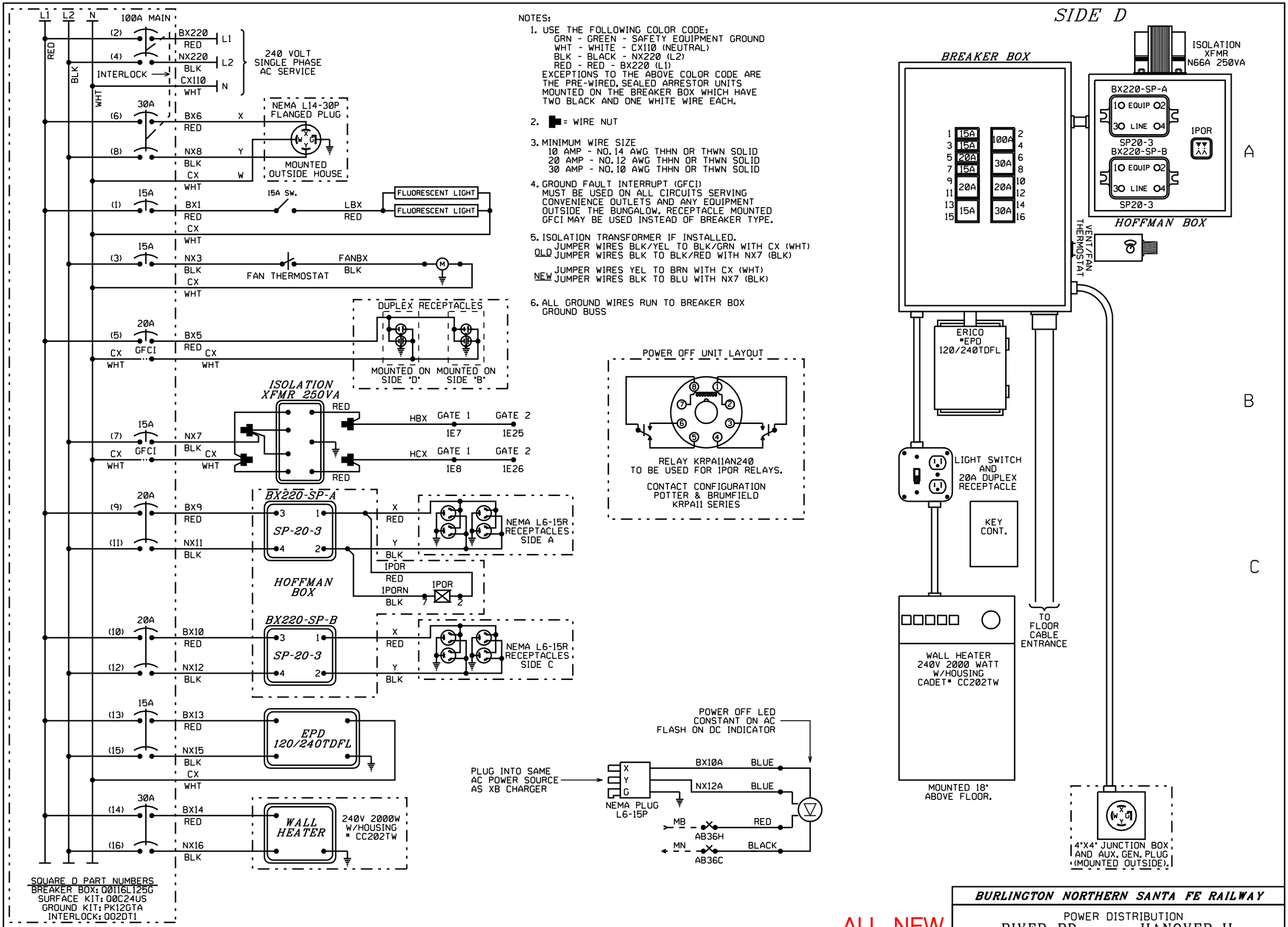


ALL NEW

DESIGNED 09-01-11
INSTALL NEW XING
RSS/JML SEQ.# 46810

**BURLINGTON NORTHERN SANTA FE RAILWAY**

POWER DISTRIBUTION
RIVER RD. HANOVER, IL

LS 0003 | MP 164.65 | SH 08 OF 12

PLAN MUST NOT BE MODIFIED WITHOUT APPROVAL OF SIGNAL ENGINEERING COPYRIGHT 2011 BNSF RAILWAY COMPANY. ALL RIGHTS RESERVED.

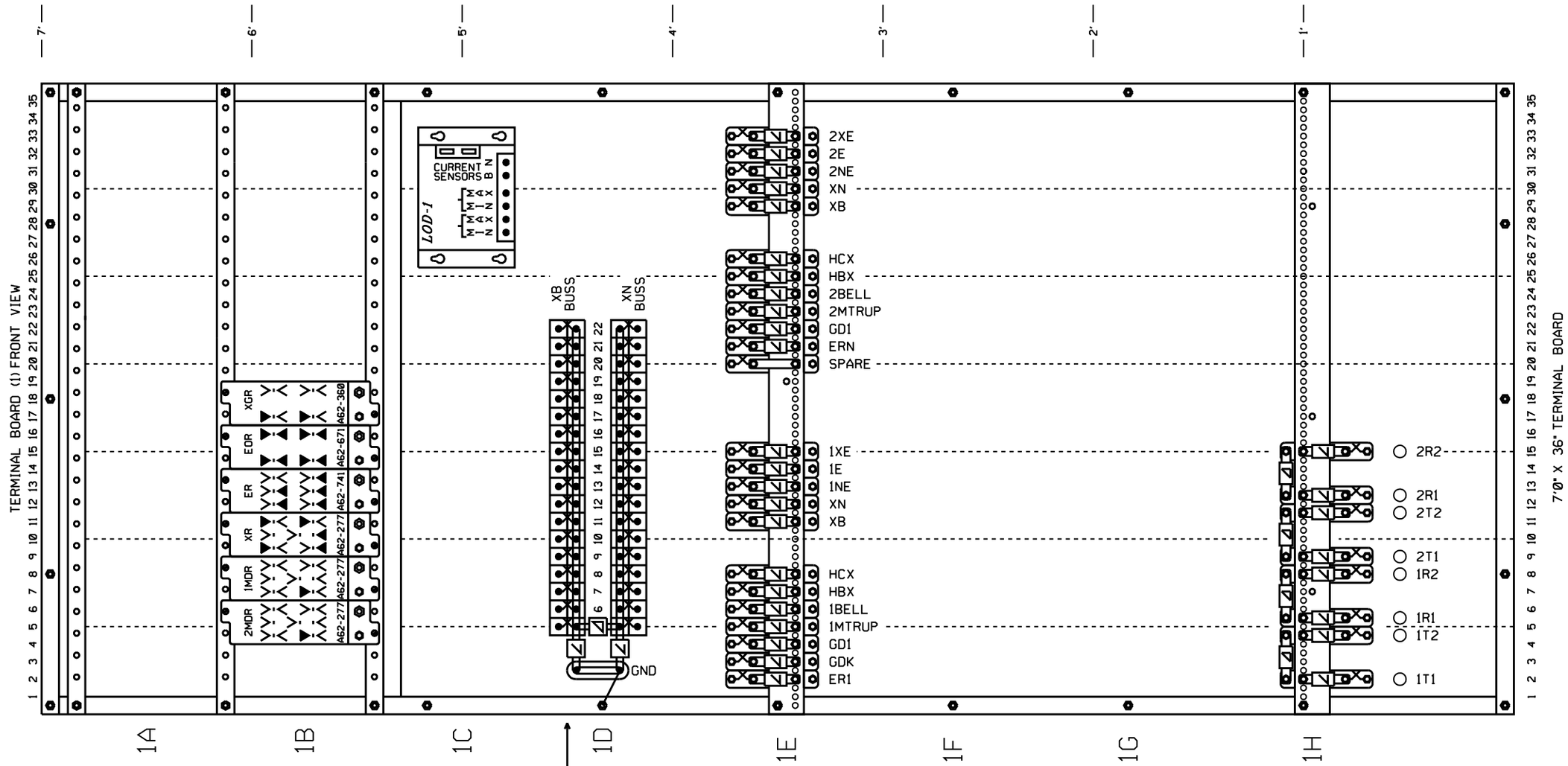


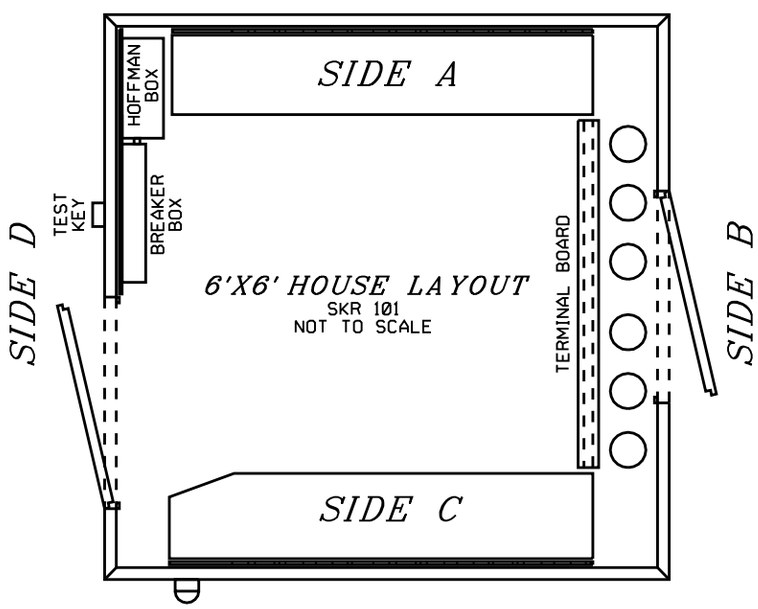


NOTE: INSTALL POWER OFF INDICATOR LIGHT ON TRACK SIDE NEAREST THE HIGHWAY AND NEAR EAVE OF HOUSE.

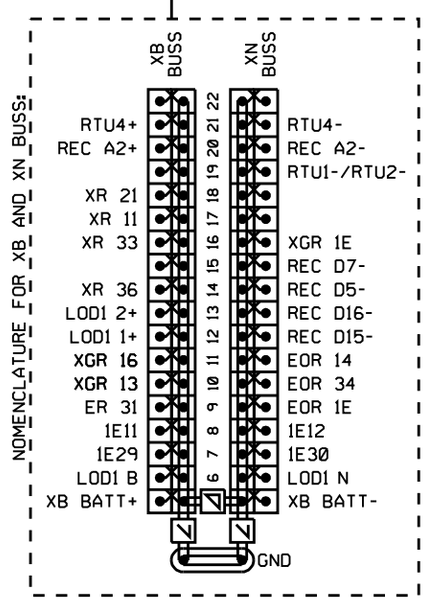


RELAY CROSS REFERENCE

| GRS | SAFETRAN |
|---|---|
| A62-277 | 400004 |
| A62-741 | 400005 |
| A62-671 | 400700 |
| A62-360 | 400200 |

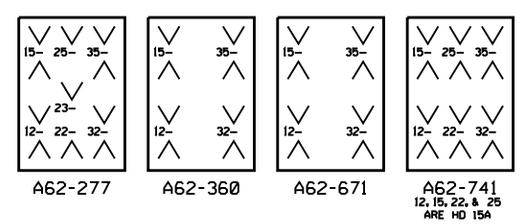


ALL NEW

DESIGNED 09-01-11
INSTALL NEW XING
RSS/JML SEQ.# 46810

**BURLINGTON NORTHERN SANTA FE RAILWAY**

TERMINAL BOARD LAYOUT
RIVER RD. HANOVER, IL

LS 0003 | MP 164.65 | SH 09 OF 12

PLAN MUST NOT BE MODIFIED WITHOUT APPROVAL OF SIGNAL ENGINEERING COPYRIGHT 2011 BNSF RAILWAY COMPANY. ALL RIGHTS RESERVED.

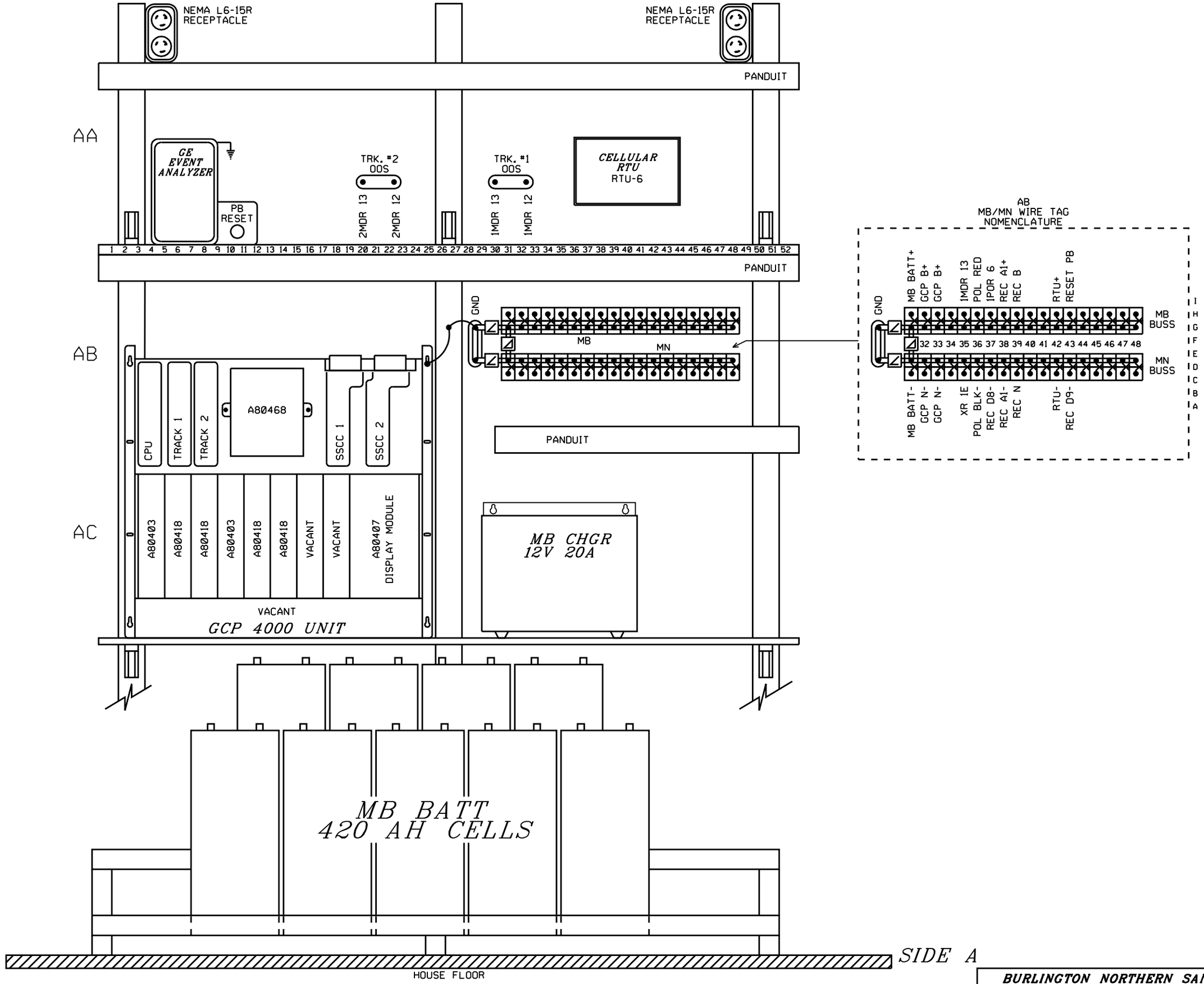


**BURLINGTON NORTHERN SANTA FE RAILWAY**

SIDE "A" SHELF LAYOUT
RIVER RD. HANOVER, IL

ALL NEW

DESIGNED 09-01-11
INSTALL NEW XING
RSS/JML SEQ.# 46810

| LS 0003 | MP 164.65 | SH 10 OF 12 |
|---|---|---|

PLAN MUST NOT BE MODIFIED WITHOUT APPROVAL OF SIGNAL ENGINEERING COPYRIGHT 2011 BNSF RAILWAY COMPANY. ALL RIGHTS RESERVED.

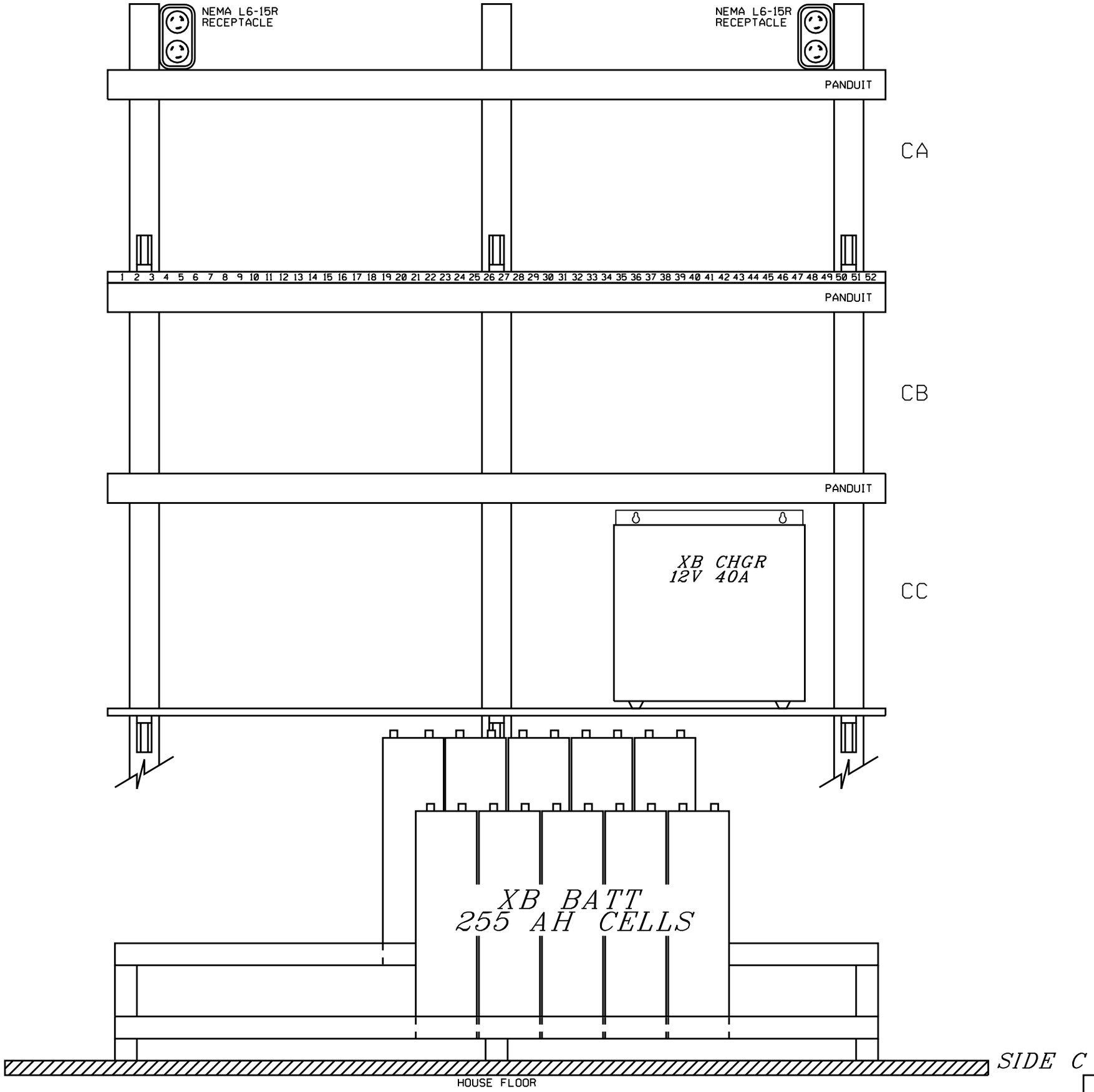


ALL NEW

DESIGNED 09-01-11
INSTALL NEW XING
RSS/JML SEQ.# 46810

**BURLINGTON NORTHERN SANTA FE RAILWAY**

SIDE "C" SHELF LAYOUT
RIVER RD. HANOVER, IL

LS 0003 | MP 164.65 | SH 11 OF 12

PLAN MUST NOT BE MODIFIED WITHOUT APPROVAL OF SIGNAL ENGINEERING COPYRIGHT 2011 BNSF RAILWAY COMPANY. ALL RIGHTS RESERVED.

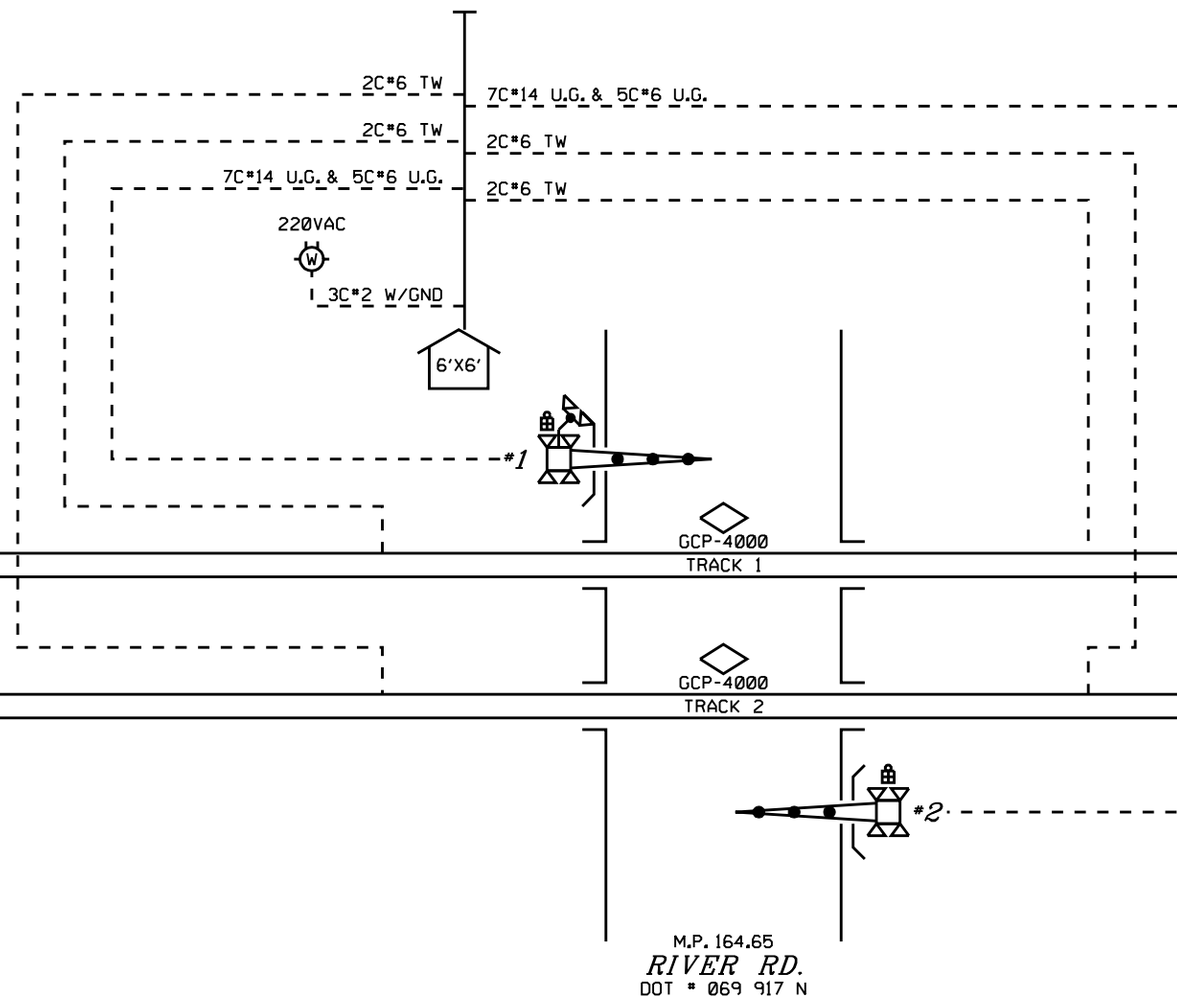


ALL NEW

DESIGNED 09-01-11
INSTALL NEW XING
RSS/JML SEQ.# 46810

**BURLINGTON NORTHERN SANTA FE RAILWAY**

CABLE LAYOUT
RIVER RD. HANOVER, IL

LS 0003 | MP 164.65 | SH 12 OF 12