JOB DESCRIPTION

TITLE: West Tilton Substation - Second 138/69kV Bulk Supply Transformer; New 138 kV Bus; and 69 kV line from West Tilton to F Street Switching Station

BUDGET REFERENCE: DP6011 and TP-336.

COMPLETION DATE: June 1, 2007 NOTIFICATION: Original

COMPANY: AmerenIP

SCOPE:

DP-6011: The project scope includes Substation work at West Tilton and F Street Switching Station and various 69 kV line projects.

- At West Tilton Substation - a second 138/69 kV, 75/140 MVA transformer to be installed. The existing 75 MVA base 138/69 kV transformer #1 at Southwest Campus to be moved to West Tilton and put in service as Transformer #2. The new transformer terminal to include a 138 kV circuit switcher, or live tank breaker, a 69 kV low side transformer breaker, 69 kV bus tie breaker, and a 69kV line terminal breaker. See special considerations items 1 and 2.
- 69 kV line terminals at F Street Switching Station and West Tilton substation - a 69 kV line terminal at each station with 1500 A minimum rating capabilities for the new line between West Tilton and F street. See special considerations item 3.
- 69 kV line work - includes construction of a new approx. 2.25 mile 69 kV line from West Tilton to F Street Substation designed with a summer normal current carrying capability of 1200 A and summer emergency current carrying capability of 1500 amps minimum (consistent with 1272 AAC); reconductor of a 1.01 mile section of L-6671 and a 0.87 mile section of L-6660: and HTO clearance for all segments of Lines 6671 and 6660. See Details Section for more particulars.

TP-336: This project scope is associated with DP-6011, and is a project to construct an in-out 138 kV bus at West Tilton for Line 1576, to replace what is currently a straight tap into West Tilton Substation. The object is to convert Line 1576 into what will be effectively, two, two-terminal lines, which, in conjunction with the addition of the second transformer, will maintain the availability of one bulk supply source at West Tilton in the event of an outage of either segment of Line 1576. Line 1576 will consist of one segment between West Tilton and Tilton Energy Center, and the other between West Tilton and Bunsonville Substation. The addition of disconnect switches on the line side of the 138 kV bus are included in the scope of work. See special considerations item 4.

JUSTIFICATION:

The 138/69 kV West Tilton transformer is projected to load to 103% of its emergency rating, and lines 6663 and 6661 to 97 and 100 % of their ratings, respectively, during the outage of Line 1572 from Vermilion to Tilton Energy Center. These impacts would occur under the following generating conditions: Vermilion 2 on, Vermilion 1 off and Tilton Energy Center full on.

The outage of Line 1576, which will also take the West Tilton transformer out, could result in a severe Area low voltage condition if Vermilion Unit #1 is off and less than half of the full capability of the four Tilton Energy Center Units is running. Even with Vermilion Unit #1 on,

under the same conditions, there are low voltages along what becomes a long radial line sourced from the Vermilion Power Plant Substation.

Although the average growth rate in the Danville Area has been low, there is a site on the east side of Danville being strongly considered for construction of a 10 MW Ethanol Plant with an ETA of Spring, 2008. Also, in the same vicinity, an existing customer has indicated to the Area Engineer a desire to expand their service to accommodate expansion plans, which could add another 5 MW load by 2009. These load additions add to the contingency loading and voltage issues.

In general, the aggregate changes will significantly reduce the reliance of the Danville Area on the status of the Tilton Energy Center units, and Vermilion Unit #1, under peak conditions. There will also be an increased capability to perform maintenance on any one bulk supply facility during off peak conditions without Vermilion #1 running.
SACF calculation: 17.8.

CASHFLOW IN THE 2006-2007 BUDGET:

	2006	2007	Total
DP-6011:			
New 69 kV line from W. Tilton to F Street Substations:		$658,000	$658,000
Reconductor Line 6671:		$370,900	$370,900
West Tilton 138/69 kV Substation:	$632,500	$1,927,600	$2,560,100
DP-6011 Subtotal	$632,500	$2,956,500	$3,589,000
TP-336:			
West Tilton 138 kV bus:	$563,500	$1,093,400	$1,656,900
Items not in 2007 budget:			
Reconductor/HTO Line 6660:		$300,000	$300,000
OVERALL PROJECT TOTAL	$1,196,000	$4,349,900	$5,545,900

Prepared by: Brian Anselmo
(Engineer)

Issued by: E. C. Pfeiffer
Manager
Electrical Planning

Reviewed by: Martin J. Hipple
(Supervisor)

Approved by: Maureen A. Borkowski
Vice-President
Energy Delivery Transmission

cc:

K. D. Anders	T. J. Barker	M. L. Wedel	P. J. Nauert
G. D. Douglass	D. C. Bouse	P. A. Fife	W. J. Hughes
R. J. Rauschenbach	M. J. Hipple	R. K. Dodd	G. R. Fuerst
E. C. Pfeiffer	K. S. Shah	F. Ferracane	M. L. Harbaugh
M. L. Hiple	R. W. Koester	B. A. Anselmo	
MAB/Chrono	TP Chrono	JD-File	

DETAILS

1. See attached sketches. Proposed facility additions shown as solid red lines.

2. 138 kV Bus Tie Position:

   a. Circuit Breaker
      - Minimum continuous capability – 2000 A.
      - Minimum interrupting capability – 40 kA (symmetrical) at 145 kV maximum.
        (The above listed ratings are based on standard capabilities. The continuous capability needs are 1850 A to allow full line capability and the fault expectations are less than 20 kA for the foreseeable future)
      - Maximum breaker clearing time – 3 cycles.

   b. Bus Conductor and disconnect switches– Minimum capability of 1850 A under summer emergency conditions. (Based on line capability)

3. 69 kV line work:

   a. Reconductor 0.87 mile section of 336.4 ACSR in Line 6660 from Structure 267 to 283 with conductor capable of Summer Normal rating of 500A (60 MVA) minimum and Summer Emergency rating of 870 A (104 MVA) minimum.

   b. Reconductor 1.01 mile section of 336.4 ACSR in Line 6671 from structure 152 to 177 with conductor capable of Summer Normal rating of 680 A (81 MVA) minimum and Summer Emergency rating of 1025 A (122 MVA) minimum.

   c. All sections of Line 6671 need to be cleared for High Temperature Operation to achieve 1025 A (122 MVA) minimum emergency capability.

   d. Line 6660 sections between Structure 267 and East Fairchild Substation will need to be cleared for Summer Emergency capability of 680 A (81 MVA).

4. Minimum continuous current-carrying capability of the new breakers and disconnect switches of 1600 A at 69 kV, 20 kA minimum interrupting capability.

5. See attached document for the Southwest Campus 138/69 kV transformer specifications.

6. Relay additions and modifications as specified by EDTS System Protection.

7. Supervisory indication and control consistent with existing terminals unless otherwise specified by Energy Supply Operations and Distribution Dispatch Operations.

Special Considerations

1. West Tilton Transformer terminals :

   A. Low side terminal equipment to be rated at 1600 A minimum in order to take advantage of the transformer's emergency ratings. This will require replacement of existing low side transformer bushings and CT's, and breaker.

B. High side terminal equipment to be rated at 1200 A. This will require replacement of the high side 600 A switch.

2. The 75 MVA base rated Southwest Campus Transformer #1 in Champaign is a good impedance match with the existing 75 MVA transformer at West Tilton (4.6% and 6 % on a 100 MVA base, respectively). It is not well matched with the paralleled Southwest Campus Transformer #3, which is a 60 MVA base rated transformer with an impedance of 8.7% on a 100 MVA base. The new transformer to be purchased will be a 138/69 kV, 60 MVA transformer with an impedance of 8.5-9% on a 100 MVA base to replace SW Campus #1.The existing SW Campus #1 transformer will also need to have its low side bushings and CT's upgraded to 1600A minimum capability prior to being put into service at West Tilton, as they are now constrained at 1200A.

    - It is anticipated that the cost savings derived from purchase of a 112 MVA transformer vs. a 140 MVA transformer will cover the cost of moving the transformer from SW Campus to West Tilton, as well as costs incurred to adjust relay settings and drawing changes.

3. 69 kV line terminal issues:

    - In order to accomplish the line routing for the new 69 kV line between West Tilton Substation and F Street Switching Station without incurring a line crossing, Line 6663 at West Tilton may need to be re-terminated at what is currently the open 69 kV terminal, and the new line terminated at the present Line 6663 terminal. As the new line requires up to 1500 A summer emergency capabilities, the 69 kV bus risers in place for Line 6663 at W. Tilton will need to be upgraded from 1.5" Al bus. The attached West Tilton drawing shows the altered terminal configuration.

    - There are two possible locations at F Street to terminate the new line from West Tilton, an open position, or the position formerly used for Line 6678. The 1200 A tie switch T423 at F Street should be replaced with thermal capability of 1500 A to account for flows from the new line to Lines 6671 and 6672.

4. When the new 138 kV bus at West Tilton is in service, it is assumed that one of the two Line 1576 segments will need to be renamed. In order to take fuller advantage of both transformers at West Tilton for a line outage, line disconnect switches at the West Tilton 138 kV bus are included in the scope of work. In addition, due to the splitting of Line 1576, a new wave trap will be required at the West Tilton 138 kV bus which will need to be tuned with the wave trap at Tilton Energy Center.

5. The line terminal capability requirements of Lines 6677 and 6663 at the West Tilton substation have not changed, and are acceptable at 1200 A maximum.

West Tilton Substation

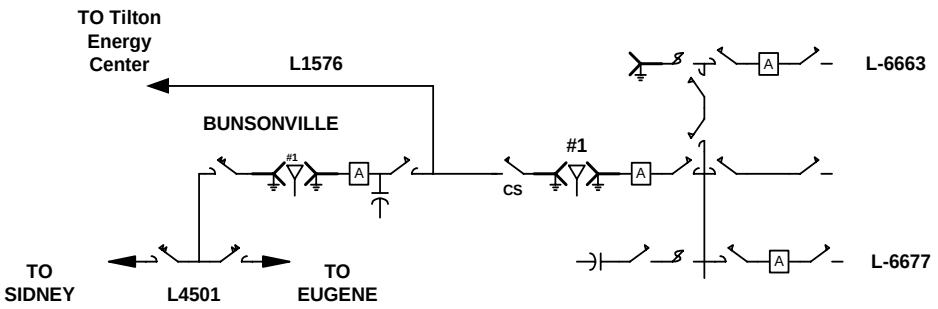

Existing configuration

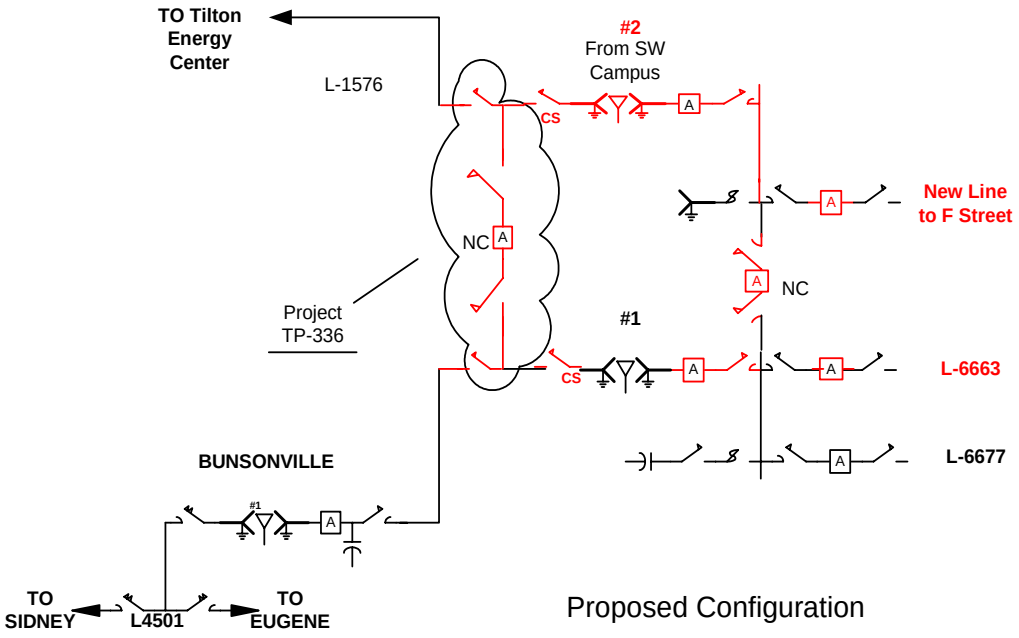

Proposed Configuration

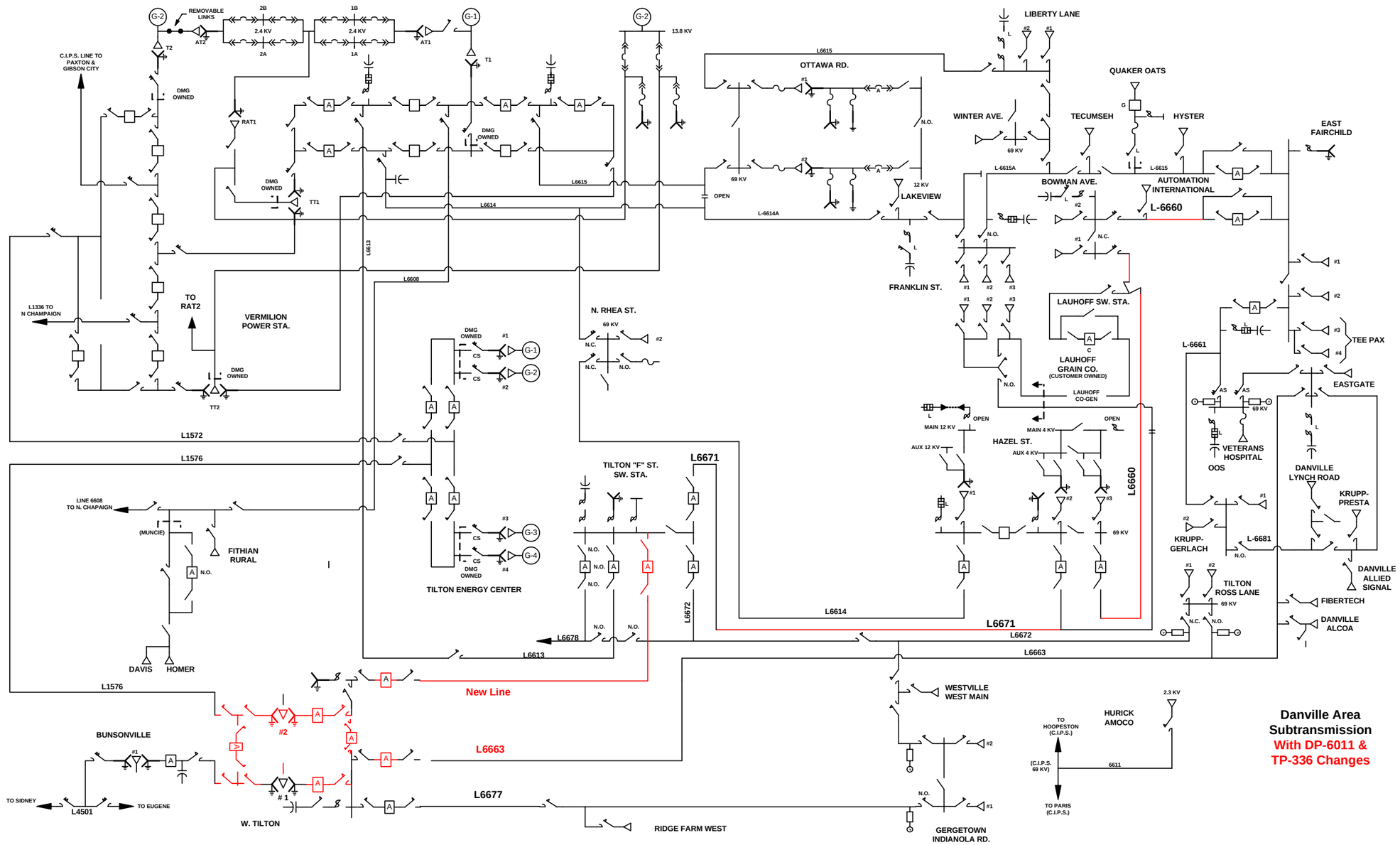

Danville Area
Subtransmission
With DP-6011 &
TP-336 Changes
New Line
VERMILION POWER STA.
TILTON ENERGY CENTER
TILTON "F" ST. SW. STA.
OTTAWA RD.
LIBERTY LANE
QUAKER OATS
WINTER AVE.
TECUMSEH
HYSTER
EAST FAIRCHILD
BOWMAN AVE.
AUTOMATION INTERNATIONAL
L-6660
LAKEVIEW
FRANKLIN ST.
LAUHOFF SW. STA.
LAUHOFF GRAIN CO.
(CUSTOMER OWNED)
LAUHOFF CO-GEN
HAZEL ST.
TEE PAX
EASTGATE
VETERANS HOSPITAL
OOS
DANVILLE LYNCH ROAD
KRUPP-PRESTA
KRUPP-GERLACH
TILTON ROSS LANE
DANVILLE ALLIED SIGNAL
FIBERTECH
DANVILLE ALCOA
N. RHEA ST.
FITHIAN RURAL
DAVIS
HOMER
BUNSONVILLE
W. TILTON
RIDGE FARM WEST
WESTVILLE WEST MAIN
GERGETOWN INDIANOLA RD.
HURICK AMOCO
TO HOOPESTON (C.I.P.S.)
TO PARIS (C.I.P.S.)
TO SIDNEY
TO EUGENE
L4501
L1572
L1576
L6613
L6614
L6615
L6608
L6671
L6672
L6663
L6677
L6678
L6661
L-6681
L-6615A
L-6614A
L6611

Transformer Specifications
For Southwest Campus #1 Replacement

1. One - 60/112 MVA (65^0C rise), 138-69 kV wye-delta-wye or wye-wye.

2. High-side no-load taps: 131.1 kV, 134.5kV, 138 kV, 141.5 kV, 144.9 kV (suggested in-service tap - 138 kV).

3. +15% -5% LTC on the 69 kV winding.

4. Impedance to be approximately 9.0% (100 MVA base)

5. Maximum expected loading:
   Summer Long Term Emergency - 137 MVA
   Summer four-hour Emergency - 154 MVA

6. A load and temperature profile and updated loss evaluation costs will be supplied at time of bid.

7. Capitalized equivalent of transformer losses:
   $ 4000/kW Fe no-load losses
   $ 1500/kW Cu load losses @ OA rating