K CYME Study Results

Scenario	@ CTA / Metra -Connection #1 (MVA)	@ CTA / Metra - Connection #2 (MVA)	@ ComEd - Circuit #1 (MVA)	@ ComEd - Circuit #2 (MVA)	@ CTA / Metra - Connection #1 (kV)	@ CTA / Metra - Connection #2 (kV)	@ ComEd - Circuit #1 (kV)	@ ComEd - Circuit #2 (kV)
1	1.3	-4.4	5.5	5.5	12.4	12.4	12.5	12.5
2	0	-4.8	0	5.6	0	12.3	0	12.5
3	0	-4.8	5.6	5.6	12.4	12.3	12.5	12.5
4	-4.8	0	10.1	0	12.2	0	12.5	0
5	-4.8	0	10.1	1.3	12.2	12.5	12.5	12.5
6	5.6	-9.9	0	11.2	12.2	12.2	12.2	12.5
7	-5.6	1.3	11.2	0	12.2	12.2	12.5	12.2
8	1.3	-4.4	5.5	5.5	12.4	12.4	12.5	12.5

K Cyme Results Comparison

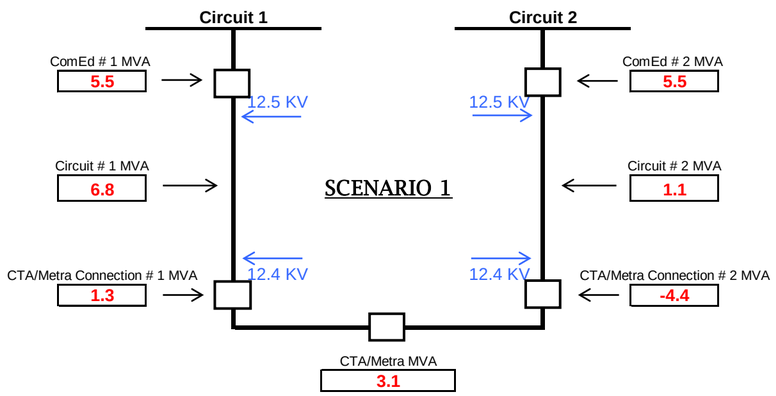

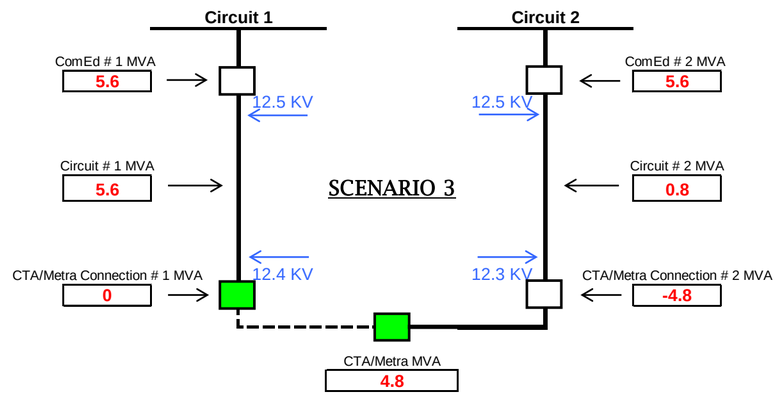

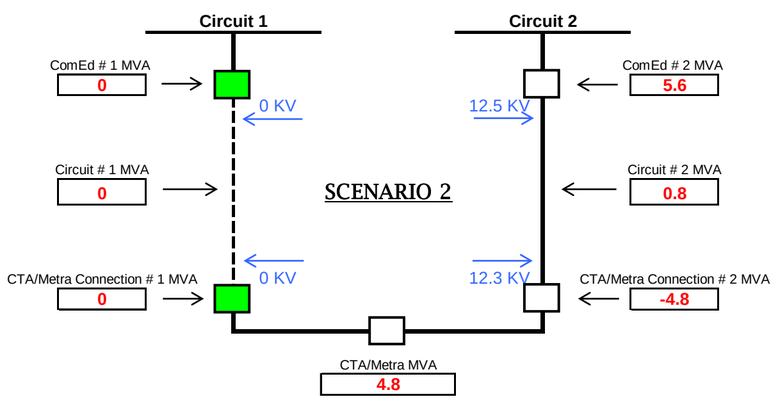

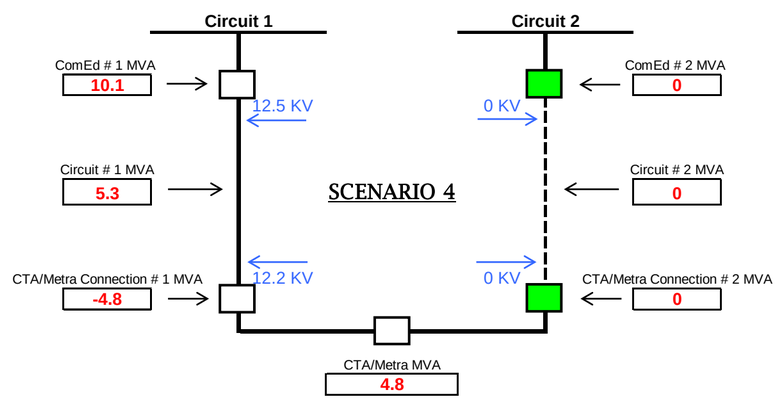

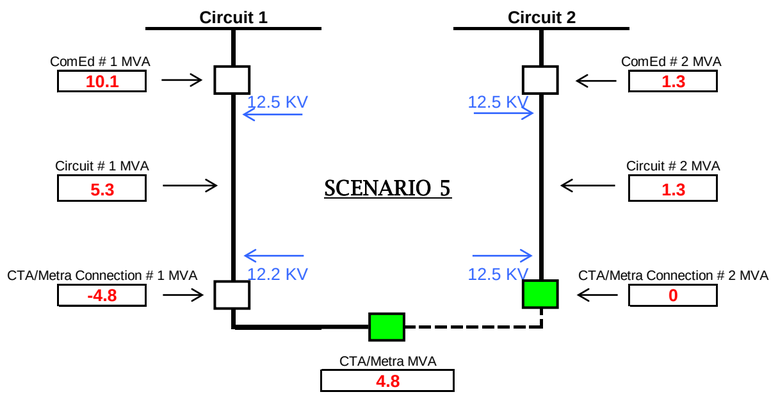
Circuit 1
Circuit 2
ComEd # 1 MVA
10.1
12.5 KV
12.5 KV
ComEd # 2 MVA
1.3
Circuit # 1 MVA
5.3
SCENARIO 5
Circuit # 2 MVA
1.3
CTA/Metra Connection # 1 MVA
-4.8
12.2 KV
12.5 KV
CTA/Metra Connection # 2 MVA
0
CTA/Metra MVA
4.8

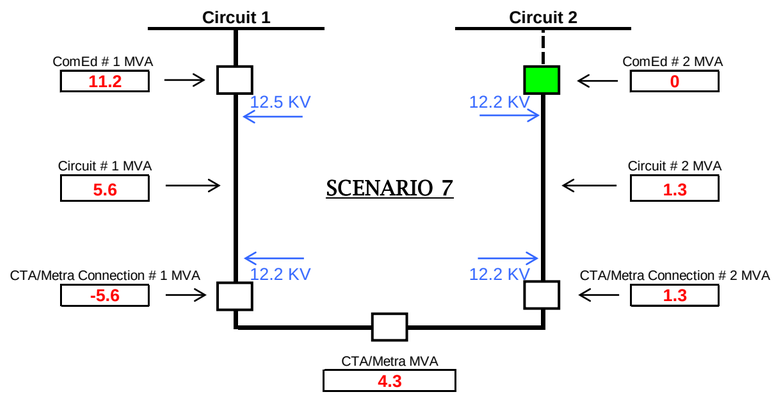
Circuit 1
Circuit 2
ComEd # 1 MVA
11.2
12.5 KV
12.2 KV
ComEd # 2 MVA
0
Circuit # 1 MVA
5.6
SCENARIO 7
Circuit # 2 MVA
1.3
CTA/Metra Connection # 1 MVA
-5.6
12.2 KV
12.2 KV
CTA/Metra Connection # 2 MVA
1.3
CTA/Metra MVA
4.3

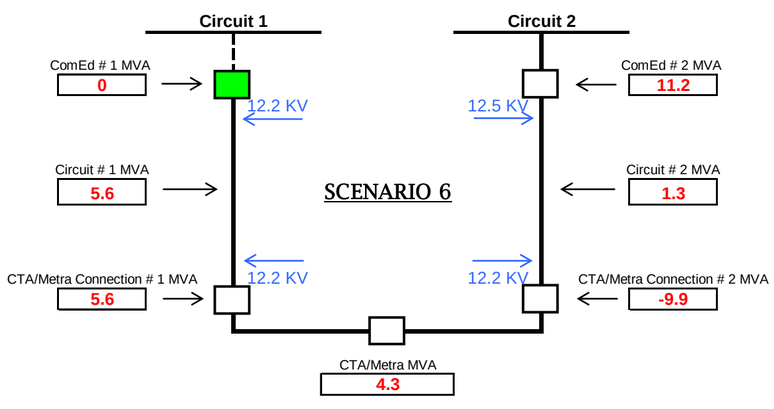
Circuit 1
Circuit 2
ComEd # 1 MVA
0
12.2 KV
12.5 KV
ComEd # 2 MVA
11.2
Circuit # 1 MVA
5.6
SCENARIO 6
Circuit # 2 MVA
1.3
CTA/Metra Connection # 1 MVA
5.6
12.2 KV
12.2 KV
CTA/Metra Connection # 2 MVA
-9.9
CTA/Metra MVA
4.3

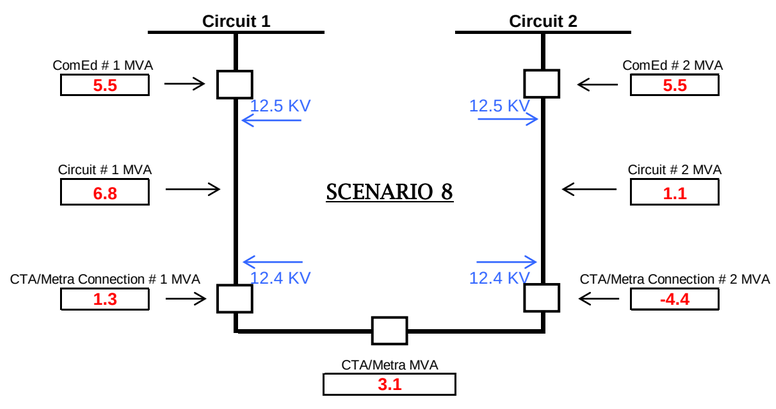
Circuit 1
Circuit 2
ComEd # 1 MVA
5.5
12.5 KV
12.5 KV
ComEd # 2 MVA
5.5
Circuit # 1 MVA
6.8
SCENARIO 8
Circuit # 2 MVA
1.1
CTA/Metra Connection # 1 MVA
1.3
12.4 KV
12.4 KV
CTA/Metra Connection # 2 MVA
-4.4
CTA/Metra MVA
3.1

K CYME Study Information

- [redacted] substation load obtained from CEDAR for [redacted] (KW with [redacted]pf).
- [redacted] tied to [redacted] per SBT, load obtained from CIMS for [redacted] (KW with [redacted]pf).
- [redacted] tied to [redacted] residential accounts per SBT, load estimated @ [redacted]KVA per account.
- [redacted] tied to [redacted] store [redacted] per SBT but transformer was not carrying load until [redacted] per CIMS.
- [redacted] replaced [redacted] but customer still tied to [redacted] per SBT, used CIMS [redacted] load for SBT customers on [redacted] (KW with [redacted]pf)
- [redacted] APT load information used.
  - [redacted] APT selected load date: [redacted].
  - [redacted] APT actual load on [redacted]: [redacted]
  - [redacted] APT WA on selected load date: [redacted]
  - [redacted] WA load: [redacted]
- [redacted] APT load information used.
  - [redacted] APT selected load date: [redacted].
  - [redacted] APT actual load on [redacted]: [redacted]
  - [redacted] APT WA on selected load date: [redacted]
  - [redacted] WA load: [redacted]
- [redacted] APT load information used.
  - [redacted] APT selected load date: [redacted].
  - [redacted] APT actual load on [redacted]: [redacted]
  - [redacted] APT WA on selected load date: [redacted]
  - [redacted] WA load: [redacted]
- [redacted] load allocation method
  - Open [redacted] breaker at [redacted] substation.
  - Allocate [redacted]A ([redacted]A plus [redacted]A) on [redacted].
  - Allocate [redacted]A ([redacted]A minus [redacted]A) on [redacted].
  - [redacted]A is the [redacted]A of flow from [redacted] with [redacted]WA at the zero point prior to radial load allocation.
  - Allocate [redacted]A on [redacted]
  - Ignore motors.

K CYME Study Information

- Adjust pf at source ([redacted]pf for [redacted], [redacted]pf for [redacted], [redacted]pf for [redacted]) and allocate to obtain an adjusted load PF of [redacted] – [redacted] on all feeders ([redacted] for [redacted], [redacted] for [redacted], [redacted] for [redacted]).
- Close bus tie at [redacted] substation and run analysis.

- [redacted] midpoint KV taken at cable section 438358322 and endpoint KV taken at overhead section 438082858.

- [redacted] midpoint KV taken at cable section 438367686 and endpoint KV taken at cable section 438302518.

K CYME Study Results

Scenario	@ CTA -Connection #1 (MVA)	@ CTA - Connection #2 (MVA)	@ ComEd - Circuit #1 (MVA)	@ ComEd - Circuit #2 (MVA)	@ CTA -Connection #1 (kV)	@ CTA - Connection #2 (kV)	@ ComEd - Circuit #1 (kV)	@ ComEd - Circuit #2 (kV)	@ ComEd - Circuit #1 Midpoint (kV)	@ ComEd - Circuit #2 Midpoint (kV)	@ ComEd - Circuit #1 Endpoint (kV)	@ ComEd - Circuit #2 Endpoint (kV)
1	+1.3	-4.4	+5.5	+5.5	12.4	12.4	12.5	12.5	12.4	12.4	12.2	12.4
2	0.0	-4.8	0.0	+5.6	0.0	12.3	0.0	12.5	0.0	12.4	0.0	12.3
3	0.0	-4.8	+5.6	+5.6	12.4	12.3	12.5	12.5	12.4	12.4	12.3	12.3
4	-4.8	0.0	+10.1	0.0	12.2	0.0	12.5	0.0	12.2	0.0	12.1	0.0
5	-4.8	0.0	+10.1	+1.3	12.2	12.5	12.5	12.5	12.2	12.5	12.1	12.5
6	+5.6	-9.9	0.0	+11.2	12.2	12.2	12.2	12.5	12.2	12.4	12.1	12.2
7	-5.6	+1.3	+11.2	0.0	12.2	12.2	12.5	12.2	12.2	12.2	12.1	12.2
8	+1.3	-4.4	+5.5	+5.5	12.4	12.4	12.5	12.5	12.4	12.4	12.2	12.4

Scenario:

Scenario 1: @ CTA/Metra connection #1 and #2 closed, @ ComEd circuit #1 and #2 closed. This represents the normal condition.

Scenario 2: @ CTA/Metra connection #1 open and #2 closed, @ ComEd circuit #1 open and #2 closed. This represents an outage of ComEd circuit #1.

Scenario 3: @ CTA/Metra connection #1 and bus tie open and #2 closed, @ ComEd circuit #1 and #2 closed. This represents an outage of CTA/Metra Bus #1.

Scenario 4: @ CTA/Metra connection #1 closed and #2 open, @ ComEd circuit #1 closed and #2 open. This represents an outage of ComEd circuit #2.

Scenario 5: @ CTA/Metra connection #1 closed and #2 and bus tie open, @ ComEd circuit #1 and #2 closed. This represents an outage of CTA/Metra Bus #2.

Scenario 6: @ CTA/Metra connection #1 and #2 closed, @ ComEd circuit #1 open and #2 closed. This represents loss of source for ComEd circuit #1.

Scenario 7: @ CTA/Metra connection #1 and #2 closed, @ ComEd circuit #1 closed and #2 open. This represents loss of source for ComEd circuit #2.

Scenario 8: Transfer [redacted] to [redacted] – loss of [redacted] would transfer [redacted] to [redacted].

CONFIDENTIAL AND PROPRIETARY - CEII

K SUBSTATION

KK CTA CYME Study Results

Scenario	@ CTA / Metra -Connection #1 (MVA)	@ CTA / Metra - Connection #2 (MVA)	@ ComEd - Circuit #1 (MVA)	@ ComEd - Circuit #2 (MVA)	@ CTA / Metra - Connection #1 (kV)	@ CTA / Metra - Connection #2 (kV)	@ ComEd - Circuit #1 (kV)	@ ComEd - Circuit #2 (kV)
1	-0.6	0.2	3.6	3.7	12.4	12.4	12.5	12.5
2	0.0	-0.5	0.0	4.3	0.0	12.4	0.0	12.5
3	0.0	-0.5	2.9	4.3	12.4	12.4	12.5	12.5
4	-0.5	0.0	3.5	0.0	12.4	0.0	12.5	0.0
5	-0.5	0.0	3.5	3.8	12.4	12.4	12.5	12.5
6	2.9	-3.4	0.0	7.3	12.3	12.3	12.3	12.5
7	-4.2	3.7	7.3	0.0	12.3	12.3	12.5	12.3
8								

KV

KK CTA Cyme Results Comparison

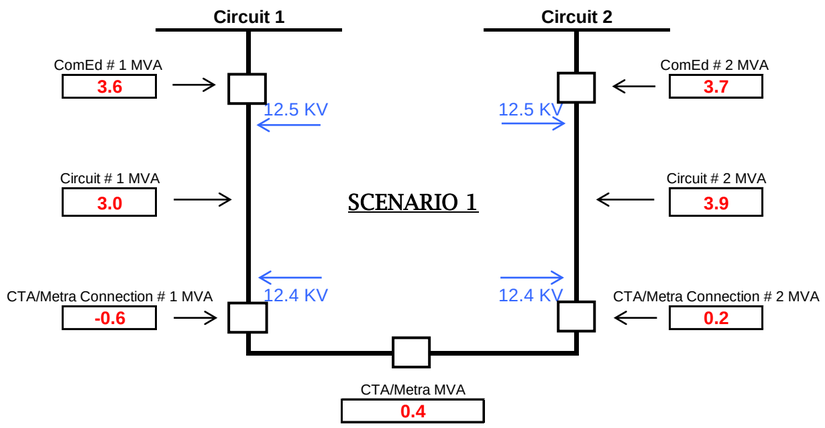

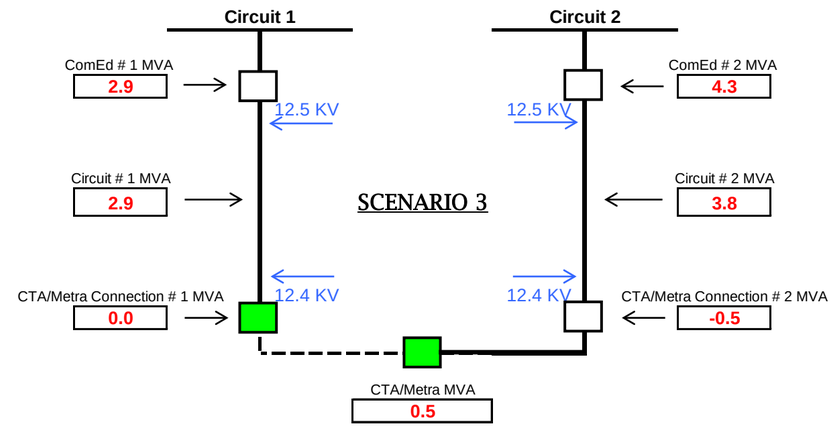

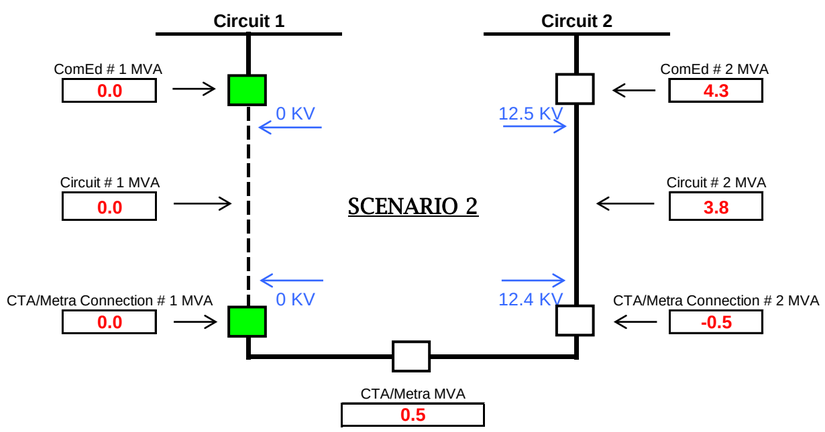

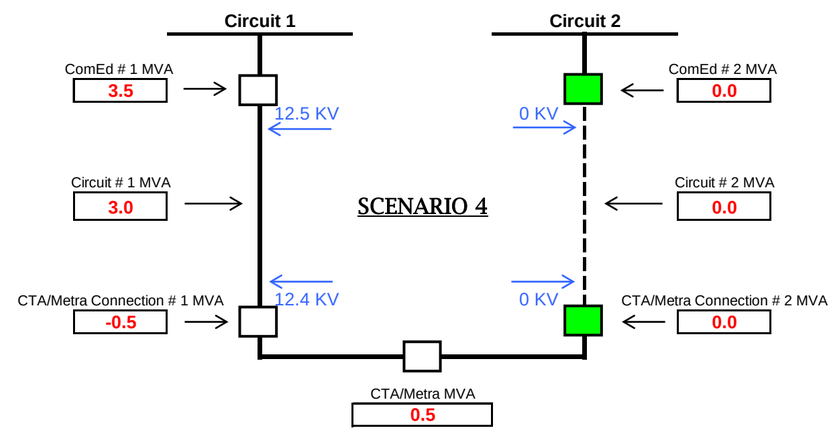

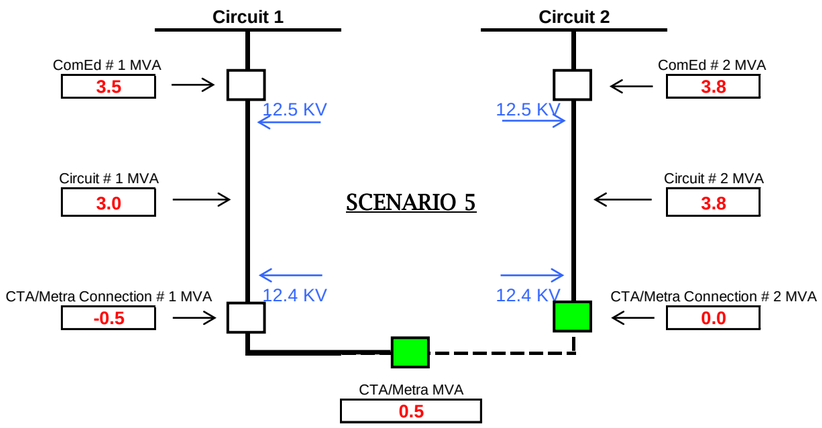
Circuit 1
Circuit 2
ComEd # 1 MVA
3.5
12.5 KV
12.5 KV
ComEd # 2 MVA
3.8
Circuit # 1 MVA
3.0
SCENARIO 5
Circuit # 2 MVA
3.8
12.4 KV
12.4 KV
CTA/Metra Connection # 1 MVA
-0.5
CTA/Metra Connection # 2 MVA
0.0
CTA/Metra MVA
0.5

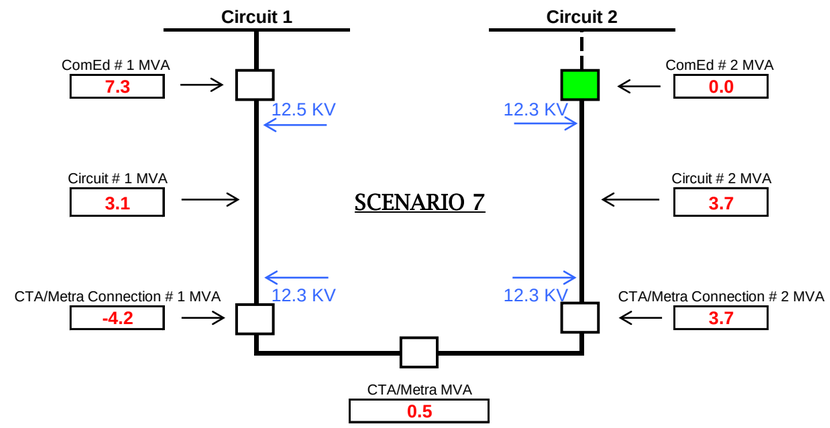
Circuit 1
Circuit 2
ComEd # 1 MVA
7.3
12.5 KV
12.3 KV
ComEd # 2 MVA
0.0
Circuit # 1 MVA
3.1
SCENARIO 7
Circuit # 2 MVA
3.7
12.3 KV
12.3 KV
CTA/Metra Connection # 1 MVA
-4.2
CTA/Metra Connection # 2 MVA
3.7
CTA/Metra MVA
0.5

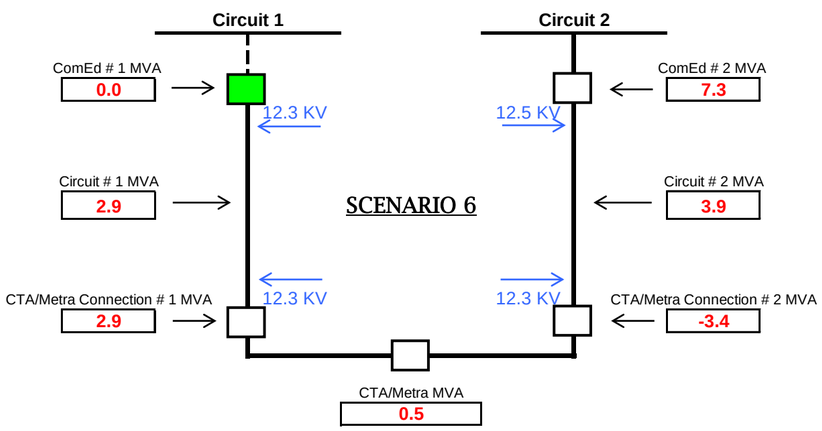
Circuit 1
Circuit 2
ComEd # 1 MVA
0.0
12.3 KV
12.5 KV
ComEd # 2 MVA
7.3
Circuit # 1 MVA
2.9
SCENARIO 6
Circuit # 2 MVA
3.9
12.3 KV
12.3 KV
CTA/Metra Connection # 1 MVA
2.9
CTA/Metra Connection # 2 MVA
-3.4
CTA/Metra MVA
0.5

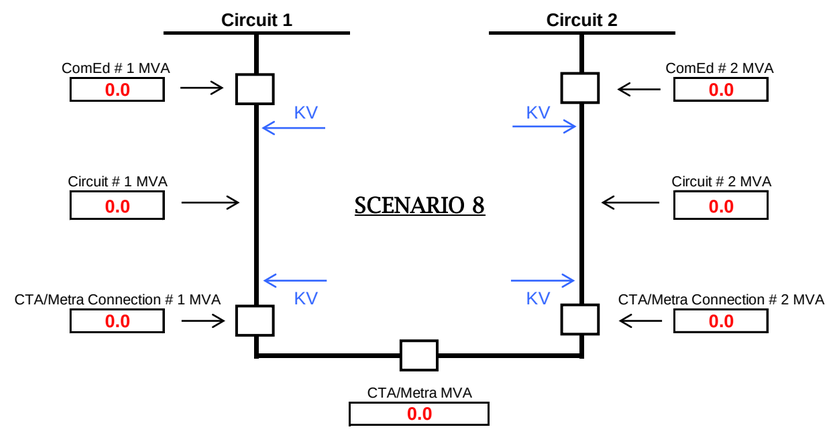
Circuit 1
Circuit 2
ComEd # 1 MVA
0.0
KV
KV
ComEd # 2 MVA
0.0
Circuit # 1 MVA
0.0
SCENARIO 8
Circuit # 2 MVA
0.0
KV
KV
CTA/Metra Connection # 1 MVA
0.0
CTA/Metra Connection # 2 MVA
0.0
CTA/Metra MVA
0.0

KK CTA CYME Study Information

- [redacted], assumed load demand of [redacted] kVA (load information obtained from CIMS).

- KK CTA ([redacted]) substation load was obtained from Cedar Loads. Peak load for each feeding line is [redacted] kVA with assumed PF=[redacted].

- [redacted] APT load information used.
  - [redacted] APT selected load date: [redacted]
  - [redacted] APT actual load on [redacted]: [redacted]A/[redacted]A/[redacted]A ➔ [redacted]A
  - [redacted] APT WA on selected load date: [redacted]
  - [redacted] WA load: [redacted]A/[redacted]A/[redacted]A ➔ [redacted]A

- [redacted] APT load information used.
  - [redacted] APT selected load date: [redacted]
  - [redacted] APT actual load on [redacted]: [redacted]A/[redacted]A/[redacted]A ➔ [redacted]A
  - [redacted] APT WA on selected load date: [redacted]
  - [redacted] WA load: [redacted]A/[redacted]A/[redacted]A➔ [redacted]A

- [redacted] CTA load allocation method
  - Validate in the CYME model all transformers, ESS loads, including [redacted] kVA for each feeding line at [redacted] per Cedar meter information.
  - Open downstream of section [redacted] (zero point). This allowed for proper load allocation on the feeders.
  - Power factor of [redacted]% for [redacted] and [redacted]% for [redacted] were used during allocation so as to obtain an adjusted load PF of [redacted]- [redacted]% on all feeders.
  - Close zero-point and run analysis.

- Physical midpoint kV on feeder [redacted] is taken at section [redacted].
- Physical endpoint kV on feeder [redacted] is taken at section [redacted].

- Physical midpoint kV on feeder [redacted] is taken at section [redacted].
- Physical endpoint kV on feeder [redacted] is taken at section [redacted].

KK CTA CYME Study Results

Scenario	@ CTA -Connection #1 (MVA)	@ CTA - Connection #2 (MVA)	@ ComEd - Circuit #1 (MVA)	@ ComEd - Circuit #2 (MVA)	@ CTA -Connection #1 (kV)	@ CTA - Connection #2 (kV)	@ ComEd - Circuit #1 (kV)	@ ComEd - Circuit #2 (kV)	@ ComEd - Circuit #1 Midpoint (kV)	@ ComEd - Circuit #2 Midpoint (kV)	@ ComEd - Circuit #1 Endpoint (kV)	@ ComEd - Circuit #2 Endpoint (kV)
1	-0.6	0.2	3.6	3.7	12.4	12.4	12.5	12.5	12.4	12.4	12.4	12.4
2	0	-0.5	0	4.3	0	12.4	0	12.5	0	12.4	0	12.4
3	0	-0.5	2.9	4.3	12.4	12.4	12.5	12.5	12.4	12.4	12.4	12.4
4	-0.5	0	3.5	0	12.4	0	12.5	0	12.4	0	12.4	0
5	-0.5	0	3.5	3.8	12.4	12.4	12.5	12.5	12.4	12.4	12.4	12.4
6	2.9	-3.4	0	7.3	12.3	12.3	12.3	12.5	12.3	12.4	12.3	12.3
7	-4.2	3.7	7.3	0	12.3	12.3	12.5	12.3	12.4	12.2	12.3	12.2

Scenario:

Scenario 1: @ CTA/Metra connection #1 and #2 closed, @ ComEd circuit #1 and #2 closed. This represents the normal condition.

Scenario 2: @ CTA/Metra connection #1 open and #2 closed, @ ComEd circuit #1 open and #2 closed. This represents an outage of ComEd circuit #1.

Scenario 3: @ CTA/Metra connection #1 and bus tie open and #2 closed, @ ComEd circuit #1 and #2 closed. This represents an outage of CTA/Metra Bus #1.

Scenario 4: @ CTA/Metra connection #1 closed and #2 open, @ ComEd circuit #1 closed and #2 open. This represents an outage of ComEd circuit #2.

Scenario 5: @ CTA/Metra connection #1 closed and #2 and bus tie open, @ ComEd circuit #1 and #2 closed. This represents an outage of CTA/Metra Bus #2.

Scenario 6: @ CTA/Metra connection #1 and #2 closed, @ ComEd circuit #1 open and #2 closed. This represents loss of source for ComEd circuit #1.

Scenario 7: @ CTA/Metra connection #1 and #2 closed, @ ComEd circuit #1 closed and #2 open. This represents loss of source for ComEd circuit #2.

CONFIDENTIAL AND PROPRIETARY - CEII

KK SUBSTATION

KKK CYME Study Results

Scenario	@ CTA / Metra -Connection #1 (MVA)	@ CTA / Metra - Connection #2 (MVA)	@ ComEd - Circuit #1 (MVA)	@ ComEd - Circuit #2 (MVA)	@ CTA / Metra - Connection #1 (kV)	@ CTA / Metra - Connection #2 (kV)	@ ComEd - Circuit #1 (kV)	@ ComEd - Circuit #2 (kV)
1	-0.4	-0.3	6.2	5.8	12.9	12.9	13.0	13.0
2	0.0	-0.5	0.0	6.2	0.0	12.9	0.0	13.0
3	0.0	-0.5	5.8	6.2	0.0	12.9	13.0	13.0
4	-0.5	0.0	6.3	0.0	12.8	0.0	13.0	0.0
5	-0.5	0.0	6.3	5.8	12.8	0.0	13.0	13.0
6	5.6	-6.1	0.0	12.0	12.7	12.7	0.0	13.0
7	-5.9	5.4	12.0	0.0	12.4	12.4	13.0	0.0
8								

KV

KKK Cyme Results Comparison

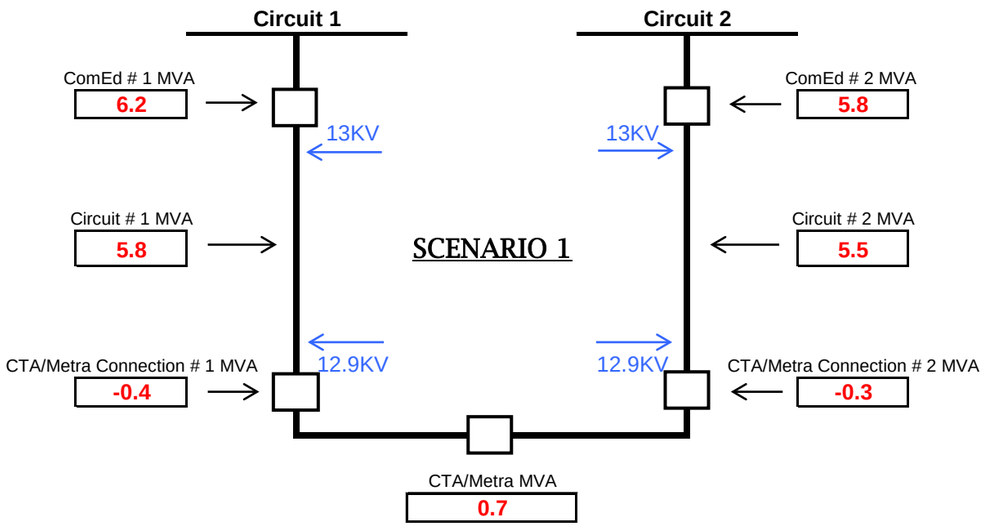

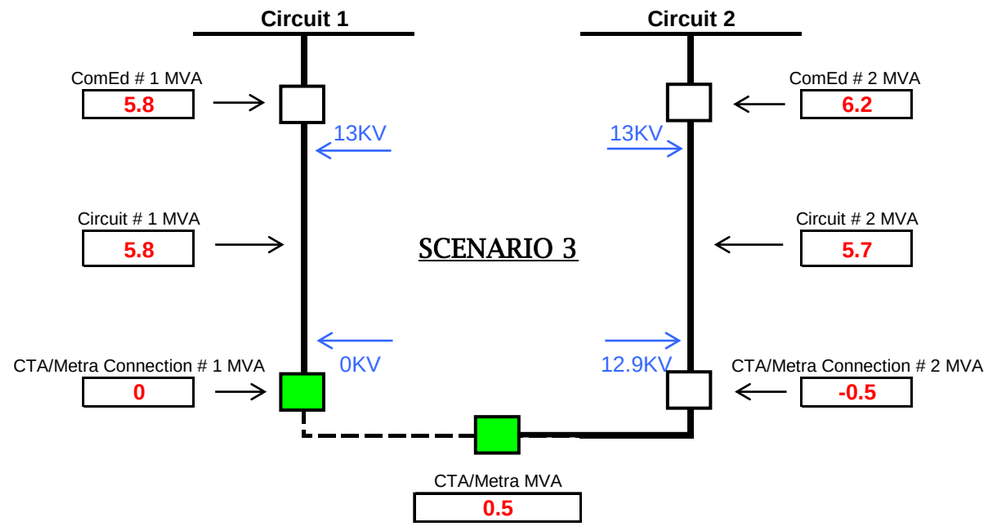

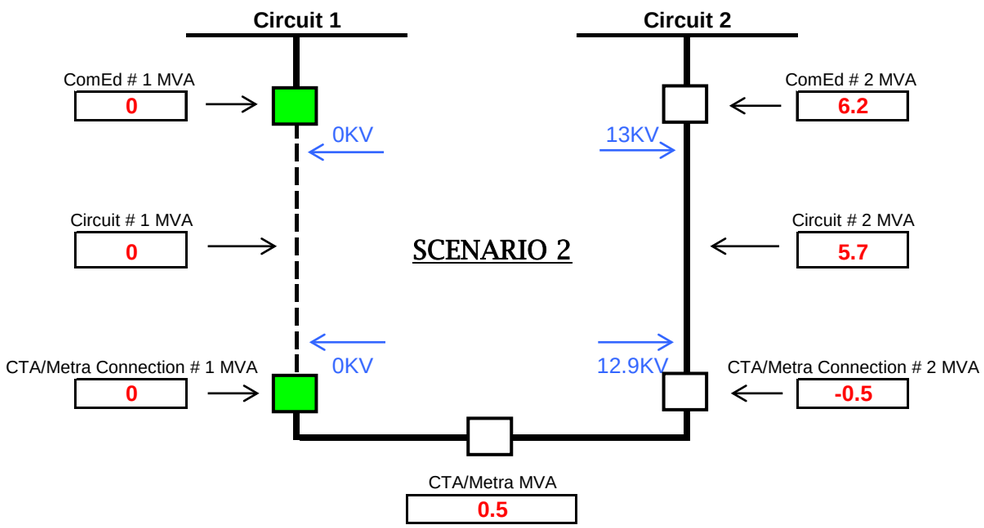

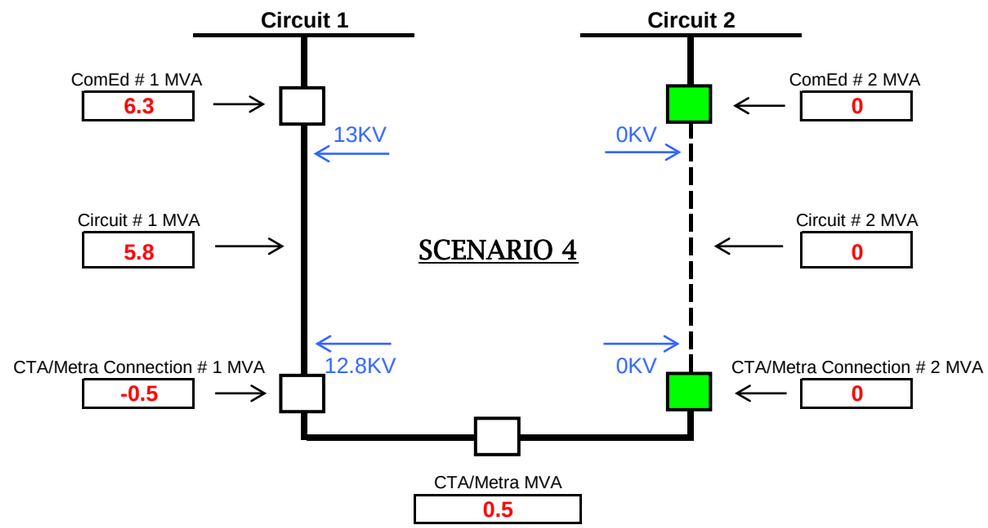

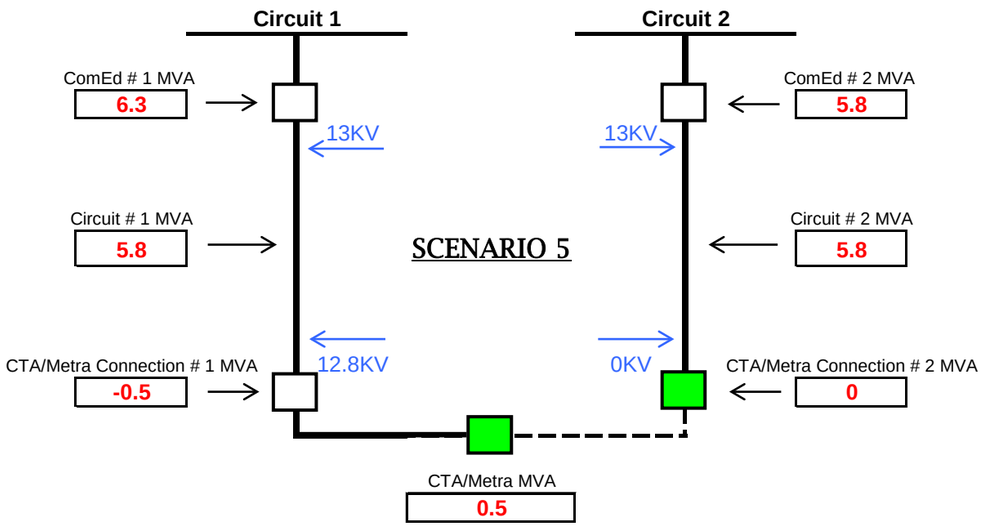
Circuit 1
Circuit 2
ComEd # 1 MVA
6.3
13KV
13KV
ComEd # 2 MVA
5.8
Circuit # 1 MVA
5.8
SCENARIO 5
Circuit # 2 MVA
5.8
CTA/Metra Connection # 1 MVA
-0.5
12.8KV
0KV
CTA/Metra Connection # 2 MVA
0
CTA/Metra MVA
0.5

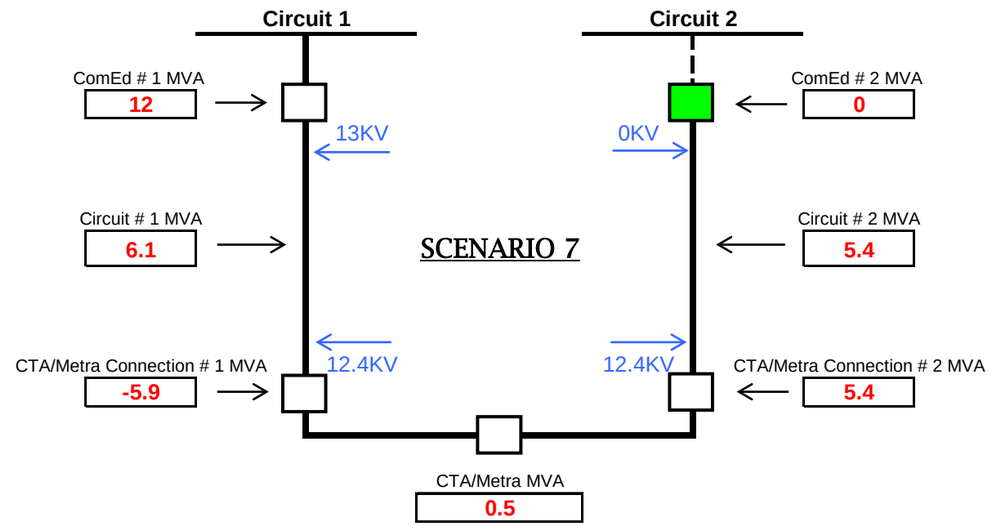
Circuit 1
Circuit 2
ComEd # 1 MVA
12
13KV
0KV
ComEd # 2 MVA
0
Circuit # 1 MVA
6.1
SCENARIO 7
Circuit # 2 MVA
5.4
CTA/Metra Connection # 1 MVA
-5.9
12.4KV
12.4KV
CTA/Metra Connection # 2 MVA
5.4
CTA/Metra MVA
0.5

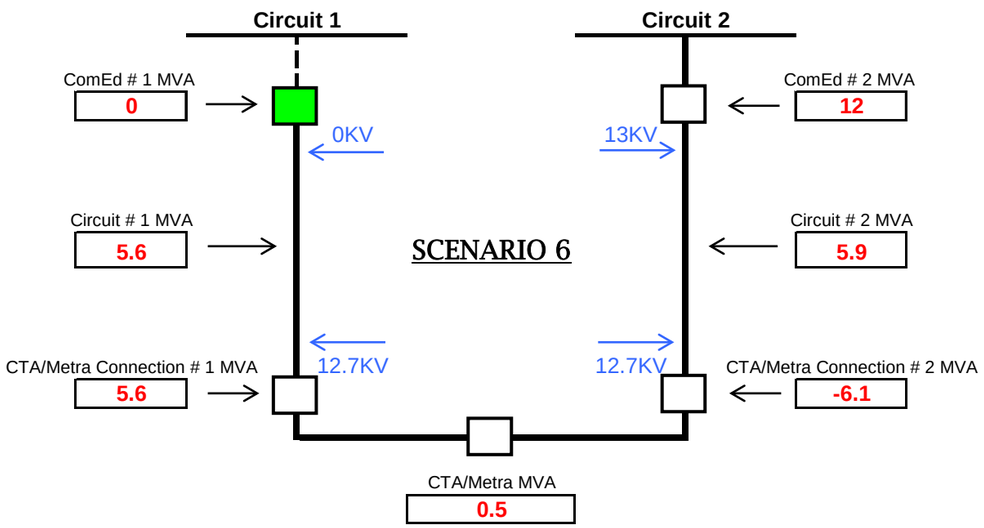
Circuit 1
Circuit 2
ComEd # 1 MVA
0
0KV
13KV
ComEd # 2 MVA
12
Circuit # 1 MVA
5.6
SCENARIO 6
Circuit # 2 MVA
5.9
CTA/Metra Connection # 1 MVA
5.6
12.7KV
12.7KV
CTA/Metra Connection # 2 MVA
-6.1
CTA/Metra MVA
0.5

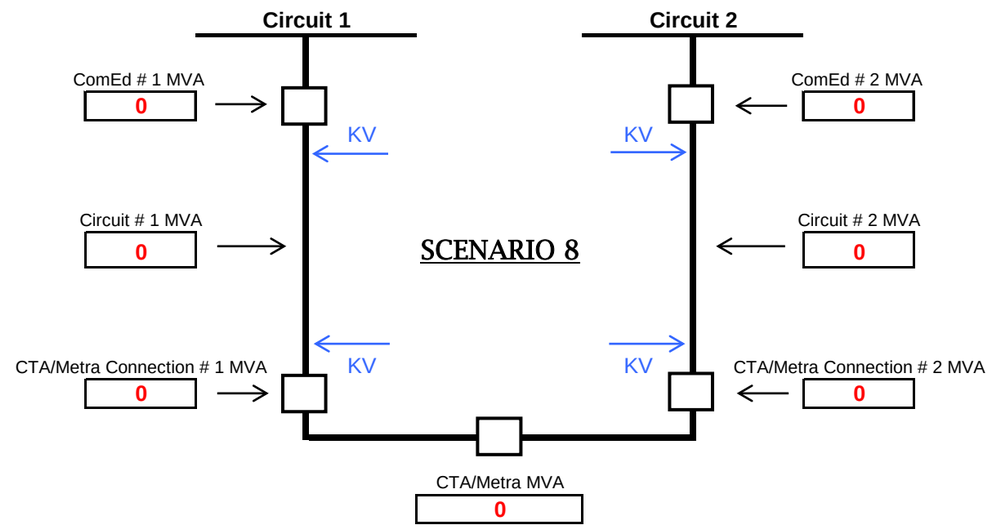
Circuit 1
Circuit 2
ComEd # 1 MVA
0
KV
KV
ComEd # 2 MVA
0
Circuit # 1 MVA
0
SCENARIO 8
Circuit # 2 MVA
0
CTA/Metra Connection # 1 MVA
0
KV
KV
CTA/Metra Connection # 2 MVA
0
CTA/Metra MVA
0

KKK CYME Study Information

- [redacted] substation load was obtained from Cedar Loads. Peak load for each feeding line is [redacted], with assumed PF=[redacted]

- [redacted] APT load information used.
  - [redacted] APT selected load date: [redacted]
  - [redacted] APT actual load on [redacted]
  - [redacted] APT WA on selected load date: [redacted]
  - [redacted] WA load: [redacted]

- [redacted] APT load information used.
  - [redacted] APT selected load date: [redacted]
  - [redacted] APT actual load on [redacted]
  - [redacted] APT WA on selected load date: [redacted]
  - [redacted] WA load: [redacted]

- [redacted] load allocation method
  - Validate in the CYME model all transformers, ESS loads, including [redacted] for each feeding line at [redacted] per Cedar meter information.
  - Open section [redacted], (i.e., assumed zero point of the network). This allowed for proper load allocation on the feeders.
  - Power factor of [redacted] for [redacted] and [redacted] for [redacted] was used during allocation so as to obtain an adjusted load PF of [redacted] on all feeders.
  - Ignore motors.
  - Open zero-point and allocate the loads.
  - Close zero-point and run analysis.

- Physical midpoint kV on feeder [redacted] is taken at section 40249513 and the endpoint kV is taken at section 189391085.

- Physical midpoint kV on feeder [redacted] is taken at section 169221 and the endpoint kV is taken at section 42344466.

KKK CYME Study Results

Scenario	@ CTA -Connection #1 (MVA)	@ CTA - Connection #2 (MVA)	@ ComEd - Circuit #1 (MVA)	@ ComEd - Circuit #2 (MVA)	@ CTA -Connection #1 (kV)	@ CTA - Connection #2 (kV)	@ ComEd - Circuit #1 (kV)	@ ComEd - Circuit #2 (kV)	@ ComEd - Circuit #1 Midpoint (kV)	@ ComEd - Circuit #2 Midpoint (kV)	@ ComEd - Circuit #1 Endpoint (kV)	@ ComEd - Circuit #2 Endpoint (kV)
1	-.4	-.3	6.2	5.8	12.9	12.9	13.0	13.0	12.8	12.9	12.9	12.8
2	0	-.5	0	6.2	0	12.9	0	13.0	0	12.9	0	12.8
3	0	-.5	5.8	6.2	0	12.9	13.0	13.0	12.9	12.9	12.9	12.8
4	-.5	0	6.3	0	12.8	0	13.0	0	12.9	0	12.8	0
5	-.5	0	6.3	5.8	12.8	0	13.0	13.0	12.9	12.9	12.9	12.9
6	5.6	-6.1	0	12.0	12.7	12.7	0	13.0	12.4	12.7	12.7	12.7
7	-5.9	5.4	12	0	12.4	12.4	13.0	0	12.8	12.4	12.4	12.4

Scenario:

Scenario 1: @ CTA connection #1 and #2 closed, @ ComEd circuit #1 and #2 closed. This represents the normal condition.

Scenario 2: @ CTA connection #1 open and #2 closed, @ ComEd circuit #1 open and #2 closed. This represents an outage of ComEd circuit #1.

Scenario 3: @ CTA connection #1 and bus tie open and #2 closed, @ ComEd circuit #1 and #2 closed. This represents an outage of CTA Bus #1.

Scenario 4: @ CTA connection #1 closed and #2 open, @ ComEd circuit #1 closed and #2 open. This represents an outage of ComEd circuit #2.

Scenario 5: @ CTA connection #1 closed and #2 and bus tie open, @ ComEd circuit #1 and #2 closed. This represents an outage of CTA Bus #2.

Scenario 6: @ CTA connection #1 and #2 closed, @ ComEd circuit #1 open and #2 closed. This represents loss of source for ComEd circuit #1.

Scenario 7: @ CTA connection #1 and #2 closed, @ ComEd circuit #1 closed and #2 open. This represents loss of source for ComEd circuit #2.

CONFIDENTIAL AND PROPRIETARY - CEII

KKK SUBSTATION

L CYME Study Results

Scenario	@ CTA / Metra -Connection #1 (MVA)	@ CTA / Metra - Connection #2 (MVA)	@ ComEd - Circuit #1 (MVA)	@ ComEd - Circuit #2 (MVA)	@ CTA / Metra - Connection #1 (kV)	@ CTA / Metra - Connection #2 (kV)	@ ComEd - Circuit #1 (kV)	@ ComEd - Circuit #2 (kV)
1	-2.8	0.3	4.5	4.5	12.3	12.3	12.5	12.5
2	0	-2.6	0	7.4	0	12.2	0	12.5
3	0	-2.6	1.5	7.4	12.4	12.2	12.5	12.5
4	-2.6	0	4.3	0	12.4	0	12.5	0
5	-2.6	0	4.3	4.7	12.4	12.3	12.5	12.5
6	1.7	-4.2	0	9.1	12.2	12.2	12.1	12.5
7	-7.2	4.7	9.1	0	12.2	12.2	12.5	12.2
8								

L Cyme Results Comparison

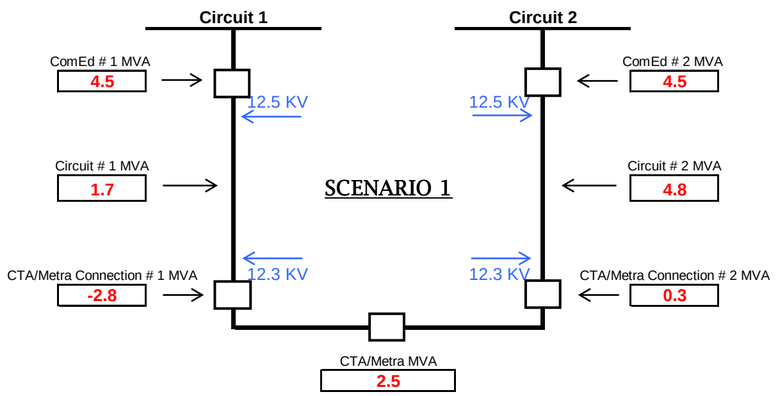

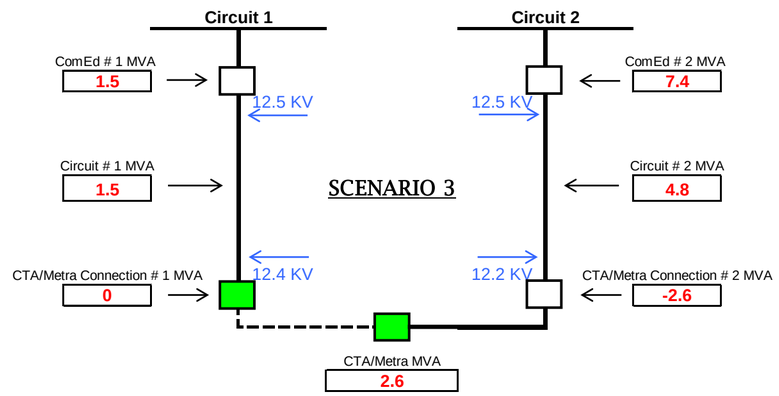

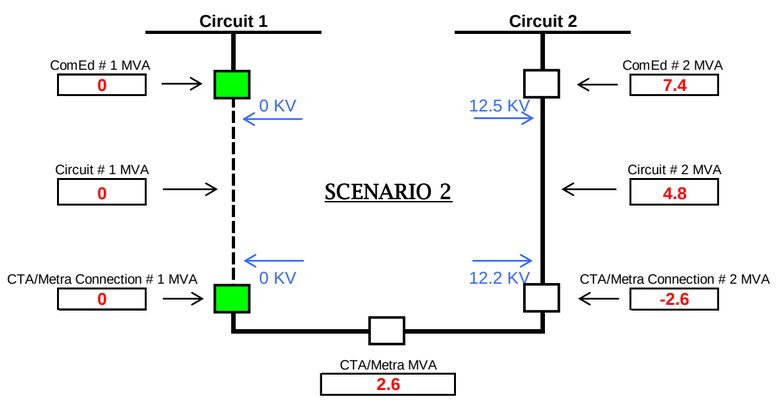

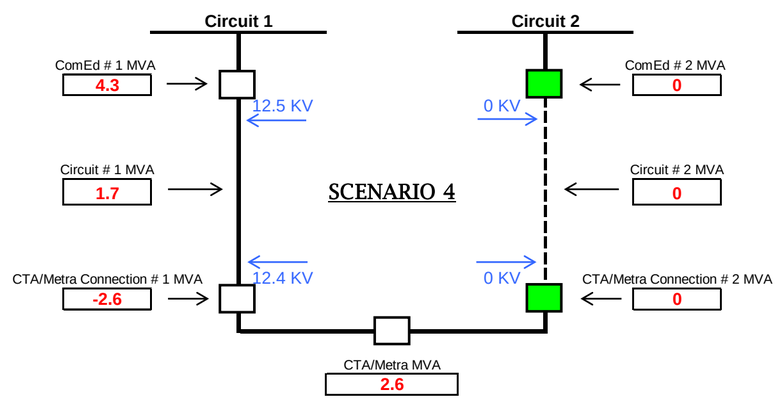

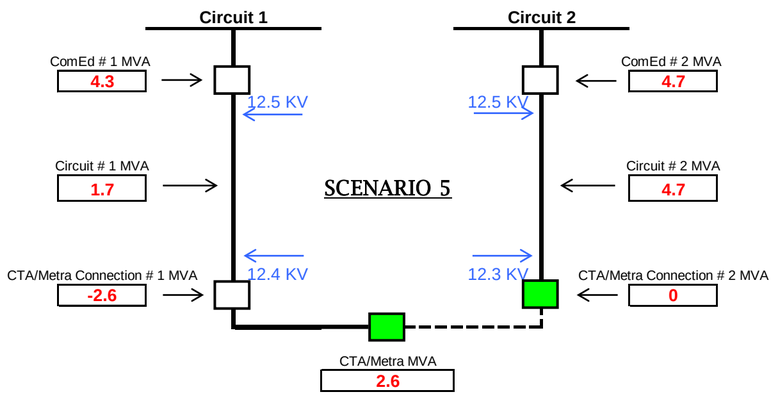
Circuit 1
Circuit 2
ComEd # 1 MVA
4.3
12.5 KV
12.5 KV
ComEd # 2 MVA
4.7
Circuit # 1 MVA
1.7
SCENARIO 5
Circuit # 2 MVA
4.7
CTA/Metra Connection # 1 MVA
-2.6
12.4 KV
12.3 KV
CTA/Metra Connection # 2 MVA
0
CTA/Metra MVA
2.6

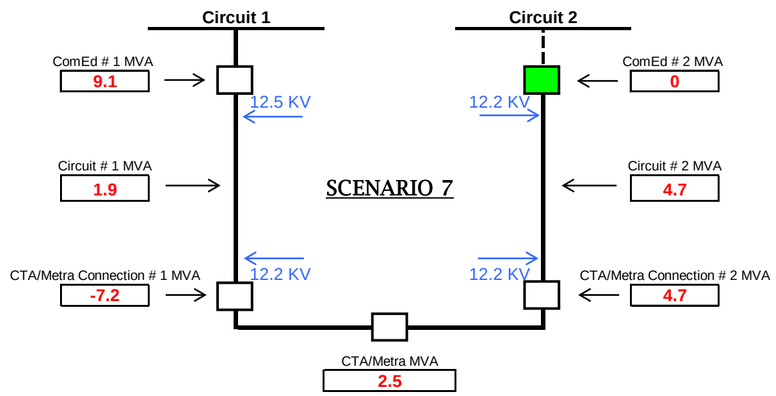
Circuit 1
Circuit 2
ComEd # 1 MVA
9.1
12.5 KV
12.2 KV
ComEd # 2 MVA
0
Circuit # 1 MVA
1.9
SCENARIO 7
Circuit # 2 MVA
4.7
CTA/Metra Connection # 1 MVA
-7.2
12.2 KV
12.2 KV
CTA/Metra Connection # 2 MVA
4.7
CTA/Metra MVA
2.5

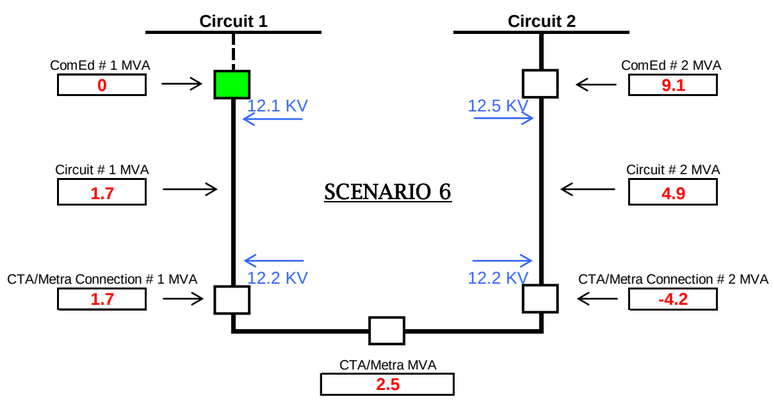
Circuit 1
Circuit 2
ComEd # 1 MVA
0
12.1 KV
12.5 KV
ComEd # 2 MVA
9.1
Circuit # 1 MVA
1.7
SCENARIO 6
Circuit # 2 MVA
4.9
CTA/Metra Connection # 1 MVA
1.7
12.2 KV
12.2 KV
CTA/Metra Connection # 2 MVA
-4.2
CTA/Metra MVA
2.5

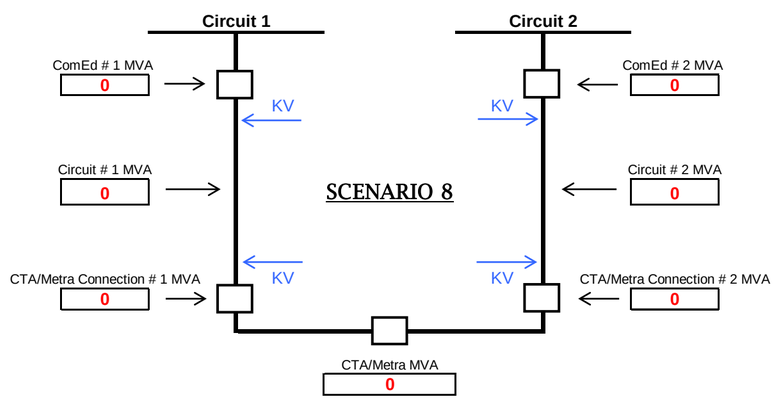
Circuit 1
Circuit 2
ComEd # 1 MVA
0
KV
KV
ComEd # 2 MVA
0
Circuit # 1 MVA
0
SCENARIO 8
Circuit # 2 MVA
0
CTA/Metra Connection # 1 MVA
0
KV
KV
CTA/Metra Connection # 2 MVA
0
CTA/Metra MVA
0

L CYME Study Information

- Warning: Transformer 12470-3760_750KVA is no longer in the equipment database. The default will be used (Section: 109530688, Two-Winding Transformer setting: [redacted]) – **changed to 12470-4160_750KVA.**

- Warning: Transformer 6900-2160_500KVA is no longer in the equipment database. The default will be used (Section: 437960048, Two-Winding Transformer setting: [redacted]) – **changed to 7200-2400_500KVA.**

- Warning: The shunt capacitor 1200_4KV is no longer in the equipment database. The default will be used (Section: 4379603300, Shunt capacitor setting: [redacted]) – **changed to 300_4KV.**

- Warning: Rated voltage is invalid. The value must be greater than 0.00000. The default value 13.80000 will be used. Rated power is invalid. The value must be greater than 0.00000. The default value 100.00000 will be used. Generator [redacted] is no longer in the equipment database. The default will be used. (Section: 438170497-2, Synchronous Generator Setting: [redacted]) – **Generator information not available, used default values, generator turned off.**

- [redacted] substation load obtained from CIMS for [redacted] (KW with [redacted]pf).

- [redacted] deleted from CYME. One line diagram and Ranger shows [redacted] with an open disconnect in [redacted].

- [redacted] load on [redacted]. Move [redacted]KVA from [redacted] to [redacted] in CYME.

- [redacted] and [redacted] load from CIMS (KW with [redacted]pf) for [redacted] meters tied to [redacted] per SBT for [redacted] divided equally to both transformers.

- [redacted] load from CIMS (KW with [redacted]pf) for [redacted] meters tied to [redacted] per SBT for [redacted].

- [redacted] APT load information used.
  - [redacted] APT selected load date: [redacted]
  - [redacted] APT actual load on [redacted]
  - [redacted] APT WA on selected load date: [redacted]
  - [redacted] WA load: [redacted]
  - [redacted] WA load with [redacted] complete: [redacted]

L CYME Study Information

- [redacted] APT load information used.
  - [redacted] APT selected load date: [redacted]
  - [redacted] APT actual load on [redacted]
  - [redacted] APT WA on selected load date: [redacted]
  - [redacted] WA load: [redacted]
  - [redacted] WA load with [redacted] complete: [redacted]

- [redacted] load allocation method
  - Open [redacted] breaker at [redacted] substation.
  - Allocate [redacted] ([redacted] minus [redacted]) on [redacted].
  - Allocate [redacted] ([redacted] plus [redacted]) on [redacted].
  - [redacted] is the [redacted] of flow from [redacted] with [redacted] WA at the zero point prior to radial load allocation.
  - Ignore motors.
  - Adjust pf at source [redacted] pf for [redacted], [redacted] pf for [redacted]) and allocate to obtain an adjusted load PF of [redacted] – [redacted] on both feeders ([redacted] for [redacted], [redacted] for [redacted]).
  - Close [redacted] breaker at [redacted] substation and run analysis.

- [redacted] midpoint KV taken at cable section 438307653 and endpoint KV taken at cable section 438171728.

- [redacted] midpoint KV taken at cable section 717020179 and endpoint KV taken at cable section 438170497-1.

L CYME Study Results

Scenario	@ CTA -Connection #1 (MVA)	@ CTA - Connection #2 (MVA)	@ ComEd - Circuit #1 (MVA)	@ ComEd - Circuit #2 (MVA)	@ CTA -Connection #1 (kV)	@ CTA - Connection #2 (kV)	@ ComEd - Circuit #1 (kV)	@ ComEd - Circuit #2 (kV)	@ ComEd - Circuit #1 Midpoint (kV)	@ ComEd - Circuit #2 Midpoint (kV)	@ ComEd - Circuit #1 Endpoint (kV)	@ ComEd - Circuit #2 Endpoint (kV)
1	-2.8	+0.3	+4.5	+4.5	12.3	12.3	12.5	12.5	12.4	12.4	12.3	12.3
2	0.0	-2.6	0.0	+7.4	0.0	12.2	0.0	12.5	0.0	12.3	0.0	12.2
3	0.0	-2.6	+1.5	+7.4	12.4	12.2	12.5	12.5	12.5	12.3	12.4	12.2
4	-2.6	0.0	+4.3	0.0	12.4	0.0	12.5	0.0	12.4	0.0	12.3	0.0
5	-2.6	0.0	+4.3	+4.7	12.4	12.3	12.5	12.5	12.4	12.4	12.3	12.3
6	+1.7	-4.2	0.0	+9.1	12.2	12.2	12.1	12.5	12.1	12.2	12.1	12.1
7	-7.2	+4.7	+9.1	0.0	12.2	12.2	12.5	12.2	12.3	12.2	12.2	12.1

Scenario:

Scenario 1: @ CTA/Metra connection #1 and #2 closed, @ ComEd circuit #1 and #2 closed. This represents the normal condition.

Scenario 2: @ CTA/Metra connection #1 open and #2 closed, @ ComEd circuit #1 open and #2 closed. This represents an outage of ComEd circuit #1.

Scenario 3: @ CTA/Metra connection #1 and bus tie open and #2 closed, @ ComEd circuit #1 and #2 closed. This represents an outage of CTA/Metra Bus #1.

Scenario 4: @ CTA/Metra connection #1 closed and #2 open, @ ComEd circuit #1 closed and #2 open. This represents an outage of ComEd circuit #2.

Scenario 5: @ CTA/Metra connection #1 closed and #2 and bus tie open, @ ComEd circuit #1 and #2 closed. This represents an outage of CTA/Metra Bus #2.

Scenario 6: @ CTA/Metra connection #1 and #2 closed, @ ComEd circuit #1 open and #2 closed. This represents loss of source for ComEd circuit #1.

Scenario 7: @ CTA/Metra connection #1 and #2 closed, @ ComEd circuit #1 closed and #2 open. This represents loss of source for ComEd circuit #2.

CONFIDENTIAL AND PROPRIETARY - CEII

L SUBSTATION

CONFIDENTIAL AND PROPRIETARY - CEII

LL & XX - SUBSTATION

LL & XX- CYME Study Information

- At [redacted], [redacted] substation, load was obtained from Cedar Loads. Peak load for each feeding line is [redacted] kW with assumed PF=[redacted].

- At [redacted], [redacted] substation, load was obtained from Cedar Loads. Peak load for each feeding line is [redacted] kW with assumed PF=[redacted].

- At [redacted], [redacted] Substation, peak load for [redacted] was obtained from APT data on [redacted].

- [redacted] APT load information used.
  - [redacted] APT selected load date: [redacted]
  - [redacted] APT actual load on [redacted]: [redacted] A ➔ [redacted] A
  - [redacted] APT WA on selected load date: [redacted]
  - [redacted] WA load: [redacted] A➔ [redacted] A

- [redacted] APT load information used.
  - [redacted] APT selected load date: [redacted]
  - [redacted] APT actual load on [redacted]: [redacted] A ➔ [redacted] A
  - [redacted] APT WA on selected load date: [redacted]
  - [redacted] WA load: [redacted] A ➔ [redacted] A

- [redacted] APT load information used.
  - [redacted] APT selected load date: [redacted]
  - [redacted] APT actual load on [redacted]: [redacted] A ➔ [redacted] A
  - [redacted] APT WA on selected load date: [redacted]
  - [redacted] WA load: [redacted] A➔ [redacted] A

- [redacted] APT load information used.
  - [redacted] APT selected load date: [redacted]
  - [redacted] APT actual load on [redacted]: [redacted] A ➔ [redacted] A
  - [redacted] APT WA on selected load date [redacted]
  - [redacted] WA load: [redacted] A➔ [redacted] A

- [redacted] CTA load allocation method
  - Validate in the CYME model all transformers, ESS loads, including [redacted] kVA for each feeding line at [redacted] and [redacted] kVA for each line at [redacted] per Cedar meter information.
  - Open bus tie at [redacted] (zero point#1), open section 485651555 (zero point #2), open [redacted] bus tie (zero point #3) and open section 3073 (zero point #4). This allowed for proper load allocation on the feeders.

- Enter feeder loads: [redacted]A for [redacted] (Avg. WA [redacted]A plus the [redacted] A contributed to [redacted]), [redacted]A for [redacted] (Avg. WA [redacted]A minus the [redacted]A supported from [redacted] and minus [redacted]A supported from [redacted]), [redacted]A for [redacted] (Avg. WA [redacted] plus [redacted]A contributed to [redacted] and minus [redacted]A supported from [redacted]), [redacted]A for [redacted] (Avg. [redacted]A plus [redacted]A contributed to [redacted]).
- Power factor of [redacted]% for [redacted] and [redacted]% for [redacted] and [redacted] were used during allocation so as to obtain an adjusted load PF of [redacted] % on all feeders.
- Close zero-points and run analysis.

- Physical midpoint kV on feeder [redacted] is taken at section 1054938760 and physical endpoint kV is taken at section 239753115.

- Physical midpoint kV on feeder [redacted] is taken at section 239785426 and physical endpoint kV is taken at section 239755057.

- Physical midpoint kV on feeder [redacted] is taken at section 716718687 and physical endpoint kV is taken at section 485507580.

- Physical midpoint kV on feeder [redacted] is taken at section 239785965 and physical endpoint kV is taken at section 239691812.

LL & XX- CTA CYME Study Results

Scenario	@ CTA -Connection #1 (MVA)	@ CTA - Connection #2 (MVA)	@ CTA - Connection #3 (MVA)	@ CTA - Connection #4 (MVA)	@ SS -Connection #1 (MVA)	@ SS - Connection #2 (MVA)	@ SS - Connection #3 (MVA)	@ ComEd - Circuit #1 (MVA)	@ ComEd - Circuit #2 (MVA)	@ ComEd - Circuit #3 (MVA)	@ ComEd - Circuit #4 (MVA)	@ CTA - Connection #1 (kV)	@ CTA - Connection #2 (kV)	@ CTA - Connection #3 (kV)	@ CTA - Connection #4 (kV)	@ ComEd - Circuit #1 (kV)	@ ComEd - Circuit #2 (kV)	@ ComEd - Circuit #3 (kV)	@ ComEd - Circuit #4 (kV)	@ SS - Connection #1 (kV)	@ SS- Connection #2 (kV)	@ SS - Connection #3 (kV)	@ ComEd - Circuit #1 Midpoint (kV)	@ ComEd - Circuit #1 Endpoint (kV)	@ ComEd - Circuit #2 Midpoint (kV)	@ ComEd - Circuit #2 Endpoint (kV)	@ ComEd - Circuit #3 Midpoint (kV)	@ ComEd - Circuit #3 Endpoint (kV)	@ ComEd - Circuit #4 Midpoint (kV)	@ ComEd - Circuit #4 Endpoint (kV)
1	-0.7	-0.5	-0.5	-0.8	-3.3	-3.1	-3.8	4.4	5.0	6.7	5.6	12.9	12.9	13.0	13.0	13.0	13.0	13.0	13.0	12.9	12.9	12.9	12.9	12.8	12.9	12.9	13.0	12.9	12.9	12.9
2	0.0	-1.3	-0.5	-0.8	-2.9	-3.3	-3.9	0.0	5.3	6.9	5.8	0.0	12.9	13.0	13.0	0.0	13.0	13.0	13.0	12.9	12.9	12.9	0.0	0.0	12.9	12.9	12.9	12.9	12.9	12.9
3	0.0	-1.3	-0.5	-0.8	-2.9	-3.3	-3.9	3.7	5.3	6.9	5.8	13.0	12.9	13.0	13.0	13.0	13.0	13.0	13.0	12.9	12.9	12.9	12.9	12.9	12.9	12.9	12.9	12.9	12.9	12.9
4	-1.3	0.0	-0.5	-0.8	0.0	-4.7	-5.4	4.9	0.0	8.4	7.2	12.9	0.0	13.0	13.0	13.0	0.0	13.0	13.0	0.0	12.9	12.9	12.9	12.8	0.0	0.0	12.9	12.9	12.9	12.9
5	-1.3	0.0	-0.5	-0.8	-3.6	-2.9	-3.7	4.9	4.7	6.6	5.5	12.9	12.9	13.0	13.0	13.0	13.0	13.0	13.0	12.9	12.9	12.9	12.9	12.8	12.9	12.9	13.0	12.9	12.9	12.9
6	-1.4	0.1	0.0	-1.4	-5.1	0.0	-5.0	5.0	6.2	0.0	7.4	12.9	12.9	0.0	13.0	13.0	13.0	0.0	13.0	12.9	0.0	12.9	12.9	12.8	12.9	12.9	0.0	0.0	12.9	12.9
7	-0.7	-0.5	0.0	-1.4	-3.3	-3.1	-3.8	4.4	5.0	6.2	6.2	12.9	12.9	13.0	13.0	13.0	13.0	13.0	13.0	12.9	12.9	12.9	12.9	12.8	12.9	12.9	13.0	12.9	12.9	12.9
8	-1.5	0.2	-1.4	0.0	-5.4	-4.7	0.0	5.2	6.4	9.2	0.0	12.9	12.9	13.0	0.0	13.0	13.0	13.0	0.0	12.9	12.9	0.0	12.9	12.8	12.9	12.9	12.9	12.9	0.0	0.0
9	-0.7	-0.5	-1.4	0.0	-3.3	-3.1	-3.8	4.4	5.0	7.6	4.8	12.9	12.9	13.0	13.0	13.0	13.0	13.0	13.0	12.9	12.9	12.9	12.9	12.8	12.9	12.9	13.0	12.9	12.9	12.9
10	3.6	-4.9	-0.5	-0.8	-1.3	-4.2	-4.8	0.0	7.1	7.9	6.7	12.9	12.9	13.0	13.0	12.9	13.0	13.0	13.0	12.9	12.9	12.9	12.8	12.8	12.9	12.9	12.9	12.9	12.9	12.9
11	-2.4	1.2	-0.5	-0.8	0.7	-4.7	-5.4	6.1	0.0	8.4	7.3	12.9	12.9	13.0	13.0	13.0	12.9	13.0	13.0	12.9	12.9	12.9	12.9	12.8	12.9	12.9	12.9	12.9	12.9	12.9
12	-1.1	-0.2	4.5	-5.8	-4.3	-1.4	-4.5	4.8	5.7	0.0	11.3	12.9	12.9	13.0	13.0	13.0	13.0	13.0	13.0	12.9	12.9	12.9	12.9	12.8	12.9	12.9	12.9	12.9	12.9	12.9
13	-1.0	-0.3	-4.8	3.4	-4.1	-3.6	-2.4	4.7	5.5	11.6	0.0	12.9	12.9	13.0	13.0	13.0	13.0	13.0	13.0	12.9	12.9	12.9	12.9	12.8	12.9	12.9	12.9	12.9	12.9	12.9
14	-1.5	0.3	-0.4	-0.9	-5.4	-4.7	0.0	5.2	6.0	8.3	1.9	12.9	12.9	13.0	13.0	13.0	13.0	13.0	13.0	12.9	12.9	13.0	12.9	12.8	12.9	12.9	12.9	12.9	13.0	12.9
15	0.4	-1.7	-0.7	-0.7	0.0	0.0	-10.0	3.3	2.9	3.8	11.8	13.0	13.0	13.0	13.0	13.0	13.0	13.0	13.0	13.0	13.0	12.8	12.9	12.9	13.0	13.0	13.0	13.0	12.8	12.8

Scenario:

Scenario 1: @ CTA/Metra connection #1, #2, #3 and #4 closed, @ ComEd circuit #1, #2, #3 and #4 closed, @ SS connection #1, #2 and #3 closed. This represents the normal condition.

Scenario 2: @ CTA/Metra connection #1 open and #2, #3 and #4 closed, @ ComEd circuit #1 open and #2, #3 and #4 closed, @SS connection #1, #2 and #3 closed. This represents an outage of ComEd circuit #1.

Scenario 3: @ CTA/Metra connection #1 and bus tie open and #2, #3 and #4 closed, @ ComEd circuit #1, #2, #3 and #4 closed, @SS connection #1, #2 and #3 closed. This represents an outage of CTA/Metra Bus #1.

Scenario 4: @ CTA/Metra connection #1, #3 and #4 closed and #2 open, @ ComEd circuit #1,#3 and #4 closed and #2 open, @SS connection #1 open, #2 and #3 closed. This represents an outage of ComEd circuit #2.

Scenario 5: @ CTA/Metra connection #1, #3 and #4 closed and #2 and bus tie open, @ ComEd circuit #1,#2, #3 and #4 , @SS connection #1, #2 and #3 closed This represents an outage of CTA/Metra Bus #2.

Scenario 6: @ CTA/Metra connection #1, #2 and #4 closed and #3 open, @ ComEd circuit #1,#2 and #4 closed and #3 open , @SS connection #1 and #3 closed, #2 open. This represents an outage of ComEd circuit #3.

Scenario 7: @ CTA/Metra connection #1, #2 and #4 closed and #3 and bus tie open, @ ComEd circuit #1, #2, #3 and #4 closed, @SS connection #1,#2 and #3 closed. This represents an outage of CTA/Metra Bus #3.

Scenario 8: @ CTA/Metra connection #1, #2 and #3 closed and #4 open, @ ComEd circuit #1, #2 and #3 closed and #4 open, @SS connection #1 and #2 closed, #3 open. This represents an outage of ComEd circuit #4.

Scenario 9: @ CTA/Metra connection #1, #2 and #3 closed and #4 and bus tie open, @ ComEd circuit #1, #2, #3 and #4 closed, @SS connection #1,#2 and #3 closed. This represents an outage of CTA/Metra Bus #4.

Scenario 10: @ CTA/Metra connection #1, #2, #3 and #4 closed, @ ComEd circuit #2, #3 and #4 closed and #1 open, @SS connection #1,#2 and #3 closed. This represents loss of source for ComEd circuit #1.

Scenario 11: @ CTA/Metra connection #1, #2, #3 and #4 closed, @ ComEd circuit #1, #3 and #4 closed and #2 open, @SS connection #1,#2 and #3 closed. This represents loss of source for ComEd circuit #2.

Scenario 12: @ CTA/Metra connection #1, #2, #3 and #4 closed, @ ComEd circuit #1, #2 and #4 closed and #3 open, @SS connection #1,#2 and #3 closed. This represents loss of source for ComEd circuit #3.

Scenario 13: @ CTA/Metra connection #1, #2, #3 and #4 closed, @ ComEd circuit #1, #2 and #3 closed and #4 open, @SS connection #1,#2 and #3 closed. This represents loss of source for ComEd circuit #4.

Scenario 14: @ CTA/Metra connection #1, #2, #3 and #4 closed, @ ComEd circuit #1, #2, #3 and #4 closed, @SS connection #1, #2 closed #3 and bus tie open. This represents loss of SS bus #2.

Scenario 15: @ CTA/Metra connection #1, #2, #3 and #4 closed, @ ComEd circuit #1, #2, #3 and #4 closed, @SS connection #1, #2 and bus tie open #3 closed. This represents loss of SS bus #1.

LL & XX CYME Study Results

Scenario	@ CTA Connection #1 (MVA)	@ CTA Connection #2 (MVA)	@ CTA Connection #3 (MVA)	@ CTA Connection #4 (MVA)	@SS Connection #1 (MVA)	@SS Connection #2 (MVA)	@SS Connection #3 (MVA)	@ ComEd Circuit #1 (MVA))	@ ComEd Circuit #2 (MVA)	@ ComEd Circuit #3 (MVA)	@ ComEd Circuit #4 (MVA)	@ CTA Connection #1 (kV)	@ CTA Connection #2 (kV)	@ CTA Connection #3 (kV)	@ CTA Connection #4 (kV)	@ ComEd Circuit #1 (kV)	@ ComEd Circuit #2 (kV)	@ ComEd Circuit #3 (kV)	@ ComEd Circuit #4 (kV)	@SS Connection #1 (kV)	@SS Connection #2 (kV)	@SS Connection #3 (kV)
1	-0.7	-0.5	-0.5	-0.8	-3.3	-3.1	-3.8	4.4	5.0	6.7	5.6	12.9	12.9	13.0	13.0	13.0	13.0	13.0	13.0	12.9	12.9	12.9
2	0.0	-1.3	-0.5	-0.8	-2.9	-3.3	-3.9	0.0	5.3	6.9	5.8	0.0	12.9	13.0	13.0	0.0	13.0	13.0	13.0	12.9	12.9	12.9
3	0.0	-1.3	-0.5	-0.8	-2.9	-3.3	-3.9	3.7	5.3	6.9	5.8	13.0	12.9	13.0	13.0	13.0	13.0	13.0	13.0	12.9	12.9	12.9
4	-1.3	0.0	-0.5	-0.8	0.0	-4.7	-5.4	4.9	0.0	8.4	7.2	12.9	0.0	13.0	13.0	13.0	0.0	13.0	13.0	0.0	12.9	12.9
5	-1.3	0.0	-0.5	-0.8	-3.6	-2.9	-3.7	4.9	4.7	6.6	5.5	12.9	12.9	13.0	13.0	13.0	13.0	13.0	13.0	12.9	12.9	12.9
6	-1.4	0.1	0.0	-1.4	-5.1	0.0	-5.0	5.0	6.2	0.0	7.4	12.9	12.9	0.0	13.0	13.0	13.0	0.0	13.0	12.9	0.0	12.9
7	-0.7	-0.5	0.0	-1.4	-3.3	-3.1	-3.8	4.4	5.0	6.2	6.2	12.9	12.9	13.0	13.0	13.0	13.0	13.0	13.0	12.9	12.9	12.9
8	-1.5	0.2	-1.4	0.0	-5.4	-4.7	0.0	5.2	6.4	9.2	0.0	12.9	12.9	13.0	0.0	13.0	13.0	13.0	0.0	12.9	12.9	0.0
9	-0.7	-0.5	-1.4	0.0	-3.3	-3.1	-3.8	4.4	5.0	7.6	4.8	12.9	12.9	13.0	13.0	13.0	13.0	13.0	13.0	12.9	12.9	12.9
10	3.6	-4.9	-0.5	-0.8	-1.3	-4.2	-4.8	0.0	7.1	7.9	6.7	12.9	12.9	13.0	13.0	12.9	13.0	13.0	13.0	12.9	12.9	12.9
11	-2.4	1.2	-0.5	-0.8	0.7	-4.7	-5.4	6.1	0.0	8.4	7.3	12.9	12.9	13.0	13.0	13.0	12.9	13.0	13.0	12.9	12.9	12.9
12	-1.1	-0.2	4.5	-5.8	-4.3	-1.4	-4.5	4.8	5.7	0.0	11.3	12.9	12.9	13.0	13.0	13.0	13.0	13.0	13.0	12.9	12.9	12.9
13	-1.0	-0.3	-4.8	3.4	-4.1	-3.6	-2.4	4.7	5.5	11.6	0.0	12.9	12.9	13.0	13.0	13.0	13.0	13.0	13.0	12.9	12.9	12.9
14	-1.5	0.3	-0.4	-0.9	-5.4	-4.7	0.0	5.2	6.0	8.3	1.9	12.9	12.9	13.0	13.0	13.0	13.0	13.0	13.0	12.9	12.9	13.0
15	0.4	-1.7	-0.7	-0.7	0.0	0.0	-10.0	3.3	2.9	3.8	11.8	13.0	13.0	13.0	13.0	13.0	13.0	13.0	13.0	13.0	13.0	12.8

LL & XX Cyme Results Comparison

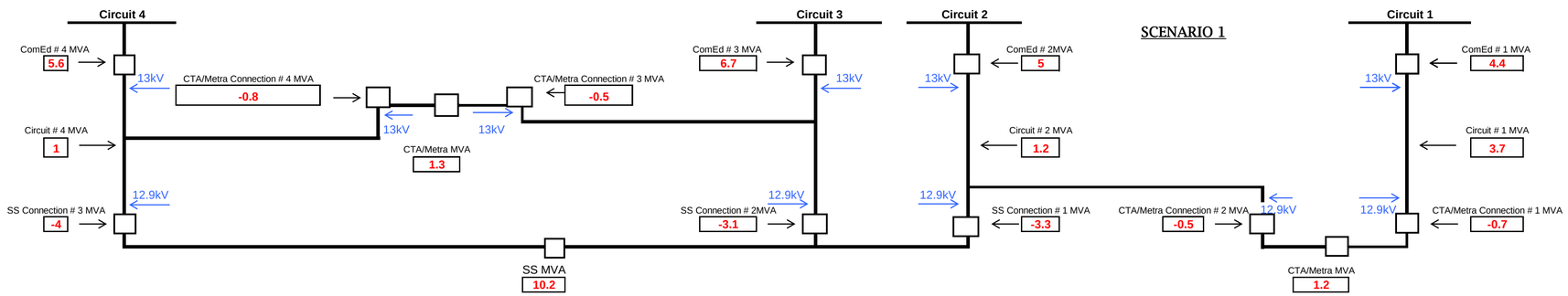

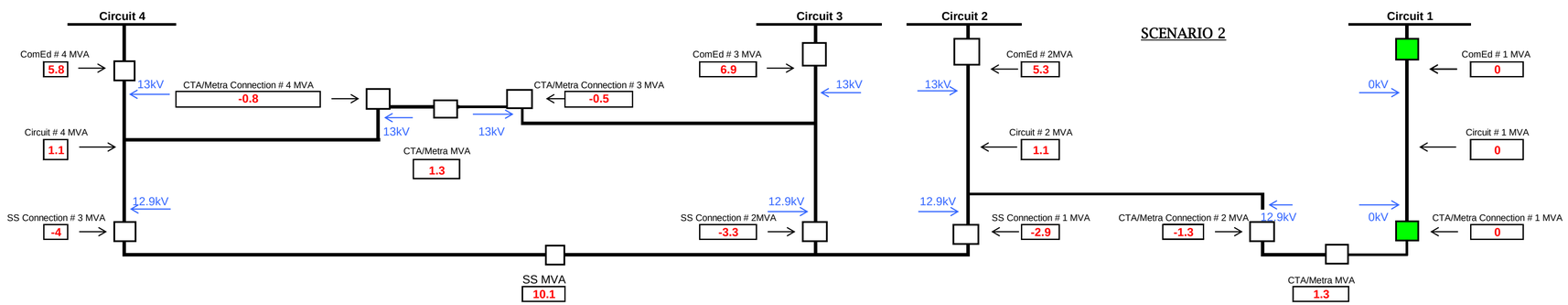

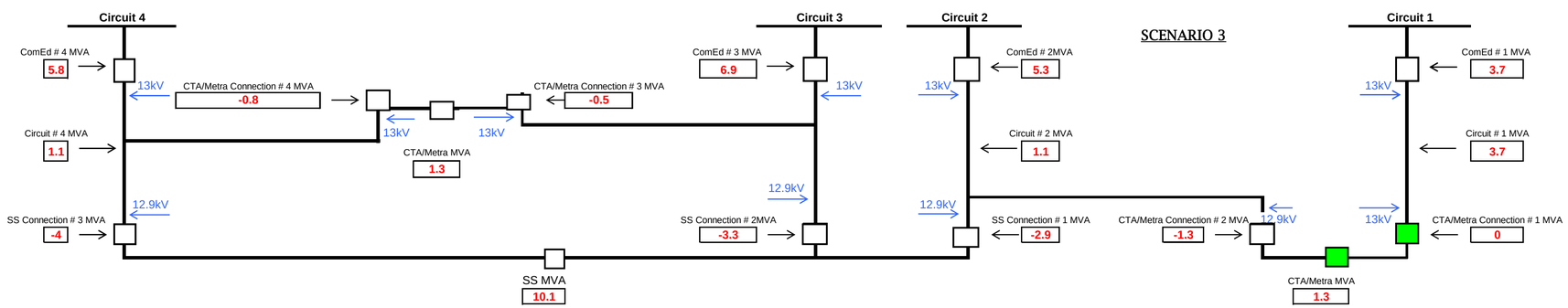

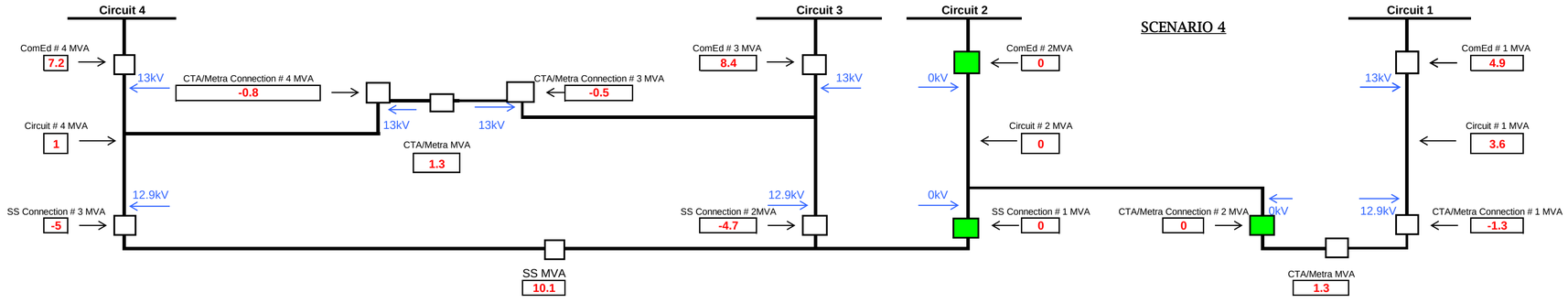
SCENARIO 4
Circuit 4
Circuit 3
Circuit 2
Circuit 1
ComEd # 4 MVA
7.2
13kV
CTA/Metra Connection # 4 MVA
-0.8
CTA/Metra Connection # 3 MVA
-0.5
ComEd # 3 MVA
8.4
13kV
0kV
ComEd # 2MVA
0
ComEd # 1 MVA
4.9
13kV
Circuit # 4 MVA
1
13kV
13kV
CTA/Metra MVA
1.3
Circuit # 2 MVA
0
Circuit # 1 MVA
3.6
12.9kV
SS Connection # 3 MVA
-5
12.9kV
SS Connection # 2MVA
-4.7
0kV
SS Connection # 1 MVA
0
CTA/Metra Connection # 2 MVA
0
0kV
12.9kV
CTA/Metra Connection # 1 MVA
-1.3
SS MVA
10.1
CTA/Metra MVA
1.3

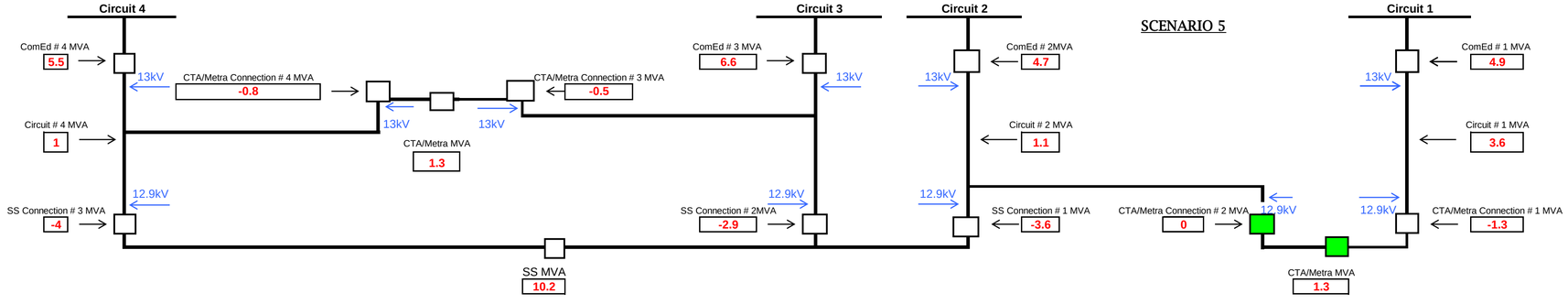
SCENARIO 5
Circuit 4
Circuit 3
Circuit 2
Circuit 1
ComEd # 4 MVA
5.5
13kV
CTA/Metra Connection # 4 MVA
-0.8
CTA/Metra Connection # 3 MVA
-0.5
ComEd # 3 MVA
6.6
13kV
13kV
ComEd # 2MVA
4.7
ComEd # 1 MVA
4.9
13kV
Circuit # 4 MVA
1
13kV
13kV
CTA/Metra MVA
1.3
Circuit # 2 MVA
1.1
Circuit # 1 MVA
3.6
12.9kV
SS Connection # 3 MVA
-4
12.9kV
SS Connection # 2MVA
-2.9
12.9kV
SS Connection # 1 MVA
-3.6
CTA/Metra Connection # 2 MVA
0
12.9kV
12.9kV
CTA/Metra Connection # 1 MVA
-1.3
SS MVA
10.2
CTA/Metra MVA
1.3

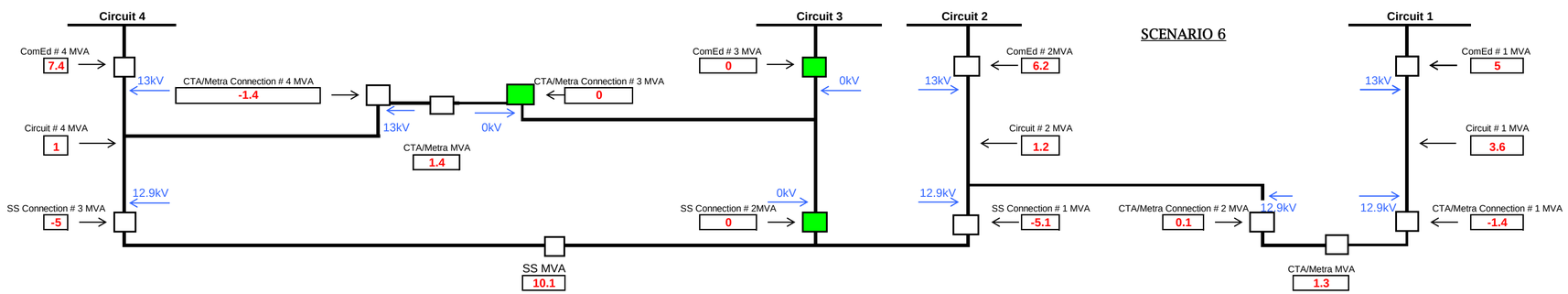
SCENARIO 6
Circuit 4
Circuit 3
Circuit 2
Circuit 1
ComEd # 4 MVA
7.4
13kV
CTA/Metra Connection # 4 MVA
-1.4
CTA/Metra Connection # 3 MVA
0
ComEd # 3 MVA
0
0kV
13kV
ComEd # 2MVA
6.2
ComEd # 1 MVA
5
13kV
Circuit # 4 MVA
1
13kV
0kV
CTA/Metra MVA
1.4
Circuit # 2 MVA
1.2
Circuit # 1 MVA
3.6
12.9kV
SS Connection # 3 MVA
-5
0kV
SS Connection # 2MVA
0
12.9kV
SS Connection # 1 MVA
-5.1
CTA/Metra Connection # 2 MVA
0.1
12.9kV
12.9kV
CTA/Metra Connection # 1 MVA
-1.4
SS MVA
10.1
CTA/Metra MVA
1.3

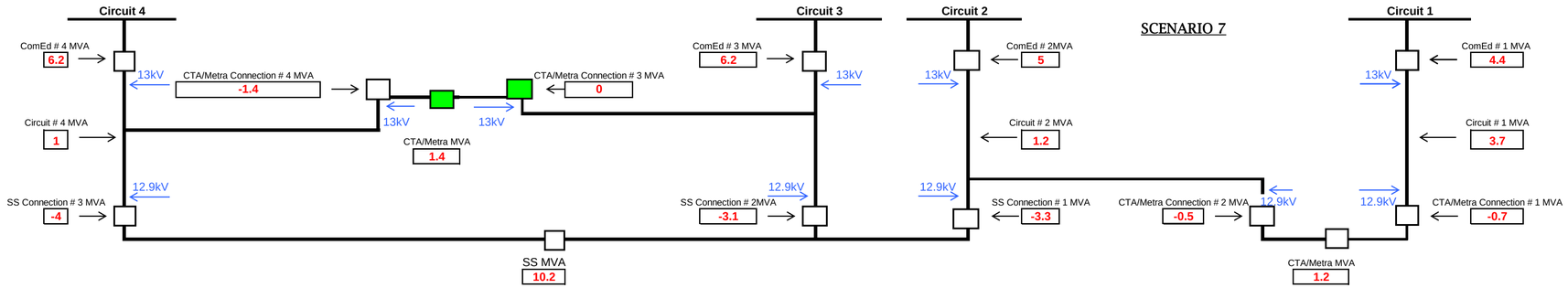
SCENARIO 7
Circuit 4
Circuit 3
Circuit 2
Circuit 1
ComEd # 4 MVA
6.2
13kV
CTA/Metra Connection # 4 MVA
-1.4
13kV
13kV
CTA/Metra Connection # 3 MVA
0
CTA/Metra MVA
1.4
Circuit # 4 MVA
1
12.9kV
SS Connection # 3 MVA
-4
ComEd # 3 MVA
6.2
13kV
12.9kV
SS Connection # 2MVA
-3.1
13kV
ComEd # 2MVA
5
Circuit # 2 MVA
1.2
12.9kV
SS Connection # 1 MVA
-3.3
CTA/Metra Connection # 2 MVA
-0.5
12.9kV
13kV
ComEd # 1 MVA
4.4
Circuit # 1 MVA
3.7
12.9kV
CTA/Metra Connection # 1 MVA
-0.7
SS MVA
10.2
CTA/Metra MVA
1.2

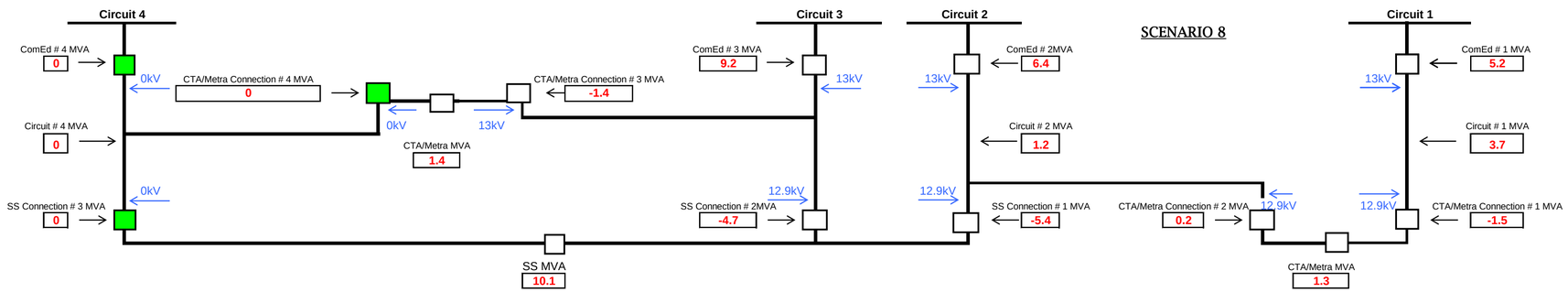
SCENARIO 8
Circuit 4
Circuit 3
Circuit 2
Circuit 1
ComEd # 4 MVA
0
0kV
CTA/Metra Connection # 4 MVA
0
0kV
13kV
CTA/Metra Connection # 3 MVA
-1.4
CTA/Metra MVA
1.4
Circuit # 4 MVA
0
0kV
SS Connection # 3 MVA
0
ComEd # 3 MVA
9.2
13kV
12.9kV
SS Connection # 2MVA
-4.7
13kV
ComEd # 2MVA
6.4
Circuit # 2 MVA
1.2
12.9kV
SS Connection # 1 MVA
-5.4
CTA/Metra Connection # 2 MVA
0.2
12.9kV
13kV
ComEd # 1 MVA
5.2
Circuit # 1 MVA
3.7
12.9kV
CTA/Metra Connection # 1 MVA
-1.5
SS MVA
10.1
CTA/Metra MVA
1.3

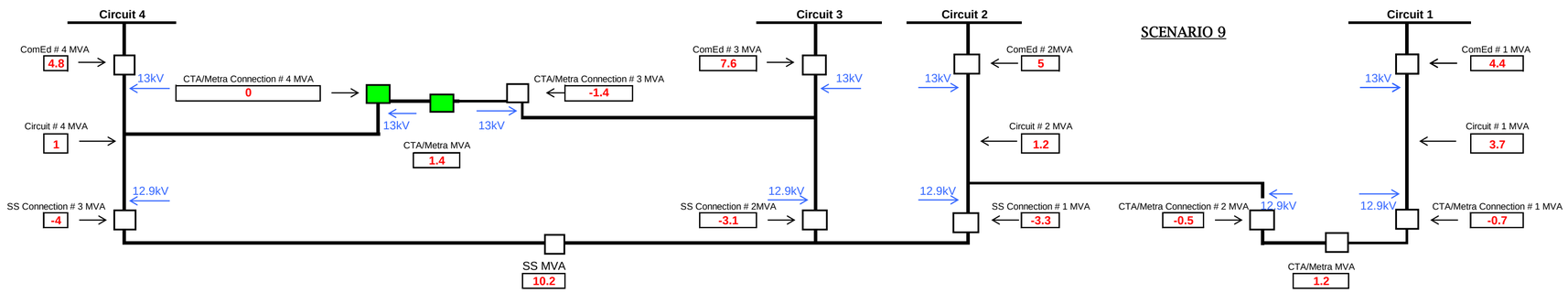
SCENARIO 9
Circuit 4
Circuit 3
Circuit 2
Circuit 1
ComEd # 4 MVA
4.8
13kV
CTA/Metra Connection # 4 MVA
0
13kV
13kV
CTA/Metra Connection # 3 MVA
-1.4
CTA/Metra MVA
1.4
Circuit # 4 MVA
1
12.9kV
SS Connection # 3 MVA
-4
ComEd # 3 MVA
7.6
13kV
12.9kV
SS Connection # 2MVA
-3.1
13kV
ComEd # 2MVA
5
Circuit # 2 MVA
1.2
12.9kV
SS Connection # 1 MVA
-3.3
CTA/Metra Connection # 2 MVA
-0.5
12.9kV
13kV
ComEd # 1 MVA
4.4
Circuit # 1 MVA
3.7
12.9kV
CTA/Metra Connection # 1 MVA
-0.7
SS MVA
10.2
CTA/Metra MVA
1.2

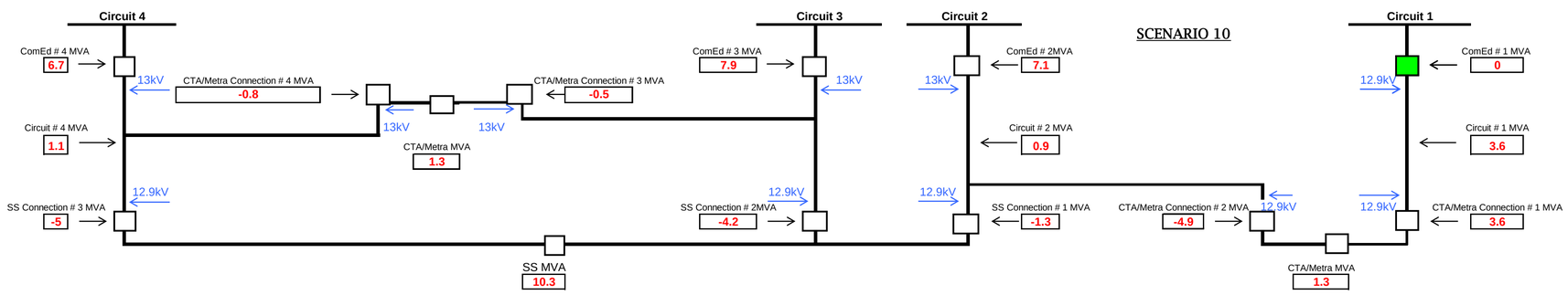
SCENARIO 10
Circuit 4
Circuit 3
Circuit 2
Circuit 1
ComEd # 4 MVA
6.7
13kV
CTA/Metra Connection # 4 MVA
-0.8
13kV
13kV
CTA/Metra Connection # 3 MVA
-0.5
CTA/Metra MVA
1.3
Circuit # 4 MVA
1.1
12.9kV
SS Connection # 3 MVA
-5
ComEd # 3 MVA
7.9
13kV
12.9kV
SS Connection # 2MVA
-4.2
13kV
ComEd # 2MVA
7.1
Circuit # 2 MVA
0.9
12.9kV
SS Connection # 1 MVA
-1.3
CTA/Metra Connection # 2 MVA
-4.9
12.9kV
12.9kV
ComEd # 1 MVA
0
Circuit # 1 MVA
3.6
12.9kV
CTA/Metra Connection # 1 MVA
3.6
SS MVA
10.3
CTA/Metra MVA
1.3

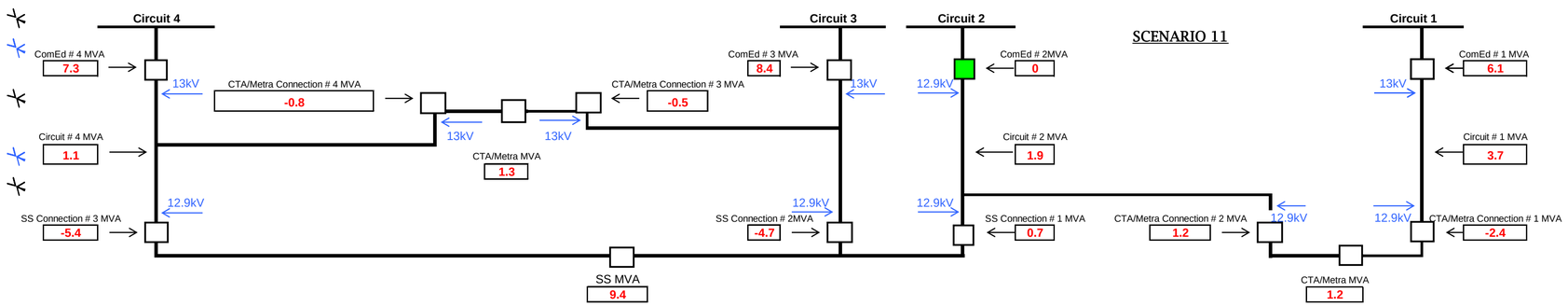
SCENARIO 11
Circuit 4
Circuit 3
Circuit 2
Circuit 1
ComEd # 4 MVA
7.3
13kV
CTA/Metra Connection # 4 MVA
-0.8
13kV
13kV
CTA/Metra Connection # 3 MVA
-0.5
ComEd # 3 MVA
8.4
13kV
12.9kV
ComEd # 2MVA
0
13kV
ComEd # 1 MVA
6.1
Circuit # 4 MVA
1.1
CTA/Metra MVA
1.3
Circuit # 2 MVA
1.9
Circuit # 1 MVA
3.7
12.9kV
SS Connection # 3 MVA
-5.4
12.9kV
SS Connection # 2MVA
-4.7
12.9kV
SS Connection # 1 MVA
0.7
CTA/Metra Connection # 2 MVA
1.2
12.9kV
12.9kV
CTA/Metra Connection # 1 MVA
-2.4
SS MVA
9.4
CTA/Metra MVA
1.2

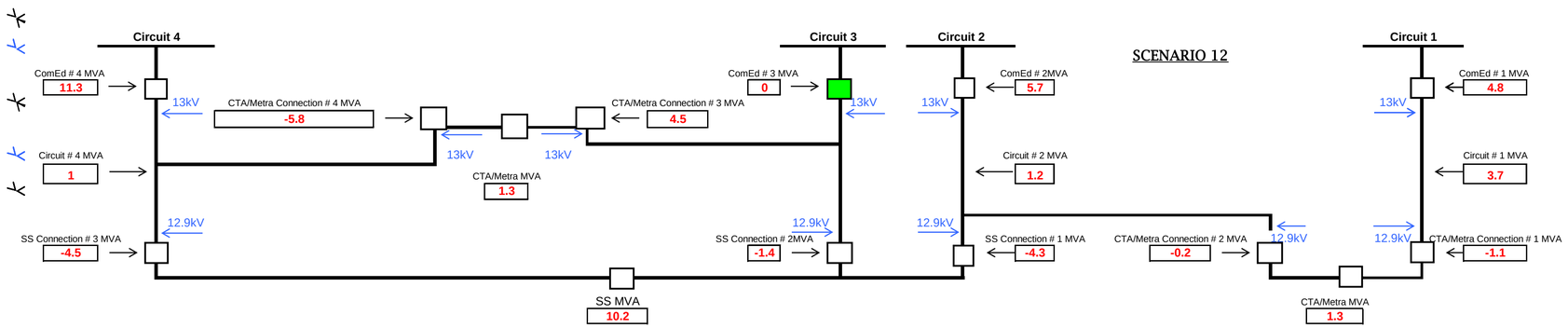
SCENARIO 12
Circuit 4
Circuit 3
Circuit 2
Circuit 1
ComEd # 4 MVA
11.3
13kV
CTA/Metra Connection # 4 MVA
-5.8
13kV
13kV
CTA/Metra Connection # 3 MVA
4.5
ComEd # 3 MVA
0
13kV
13kV
ComEd # 2MVA
5.7
13kV
ComEd # 1 MVA
4.8
Circuit # 4 MVA
1
CTA/Metra MVA
1.3
Circuit # 2 MVA
1.2
Circuit # 1 MVA
3.7
12.9kV
SS Connection # 3 MVA
-4.5
12.9kV
SS Connection # 2MVA
-1.4
12.9kV
SS Connection # 1 MVA
-4.3
CTA/Metra Connection # 2 MVA
-0.2
12.9kV
12.9kV
CTA/Metra Connection # 1 MVA
-1.1
SS MVA
10.2
CTA/Metra MVA
1.3

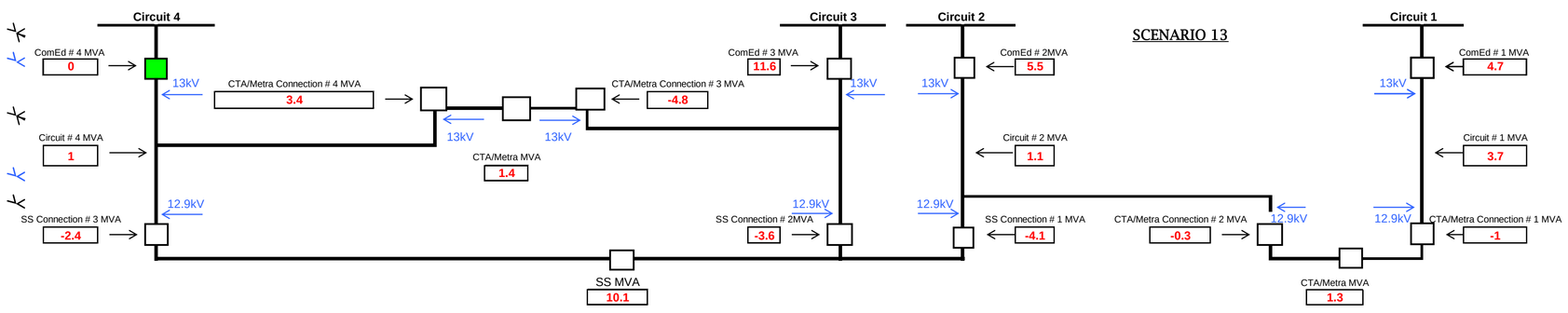
SCENARIO 13
Circuit 4
Circuit 3
Circuit 2
Circuit 1
ComEd # 4 MVA
0
13kV
CTA/Metra Connection # 4 MVA
3.4
13kV
13kV
CTA/Metra Connection # 3 MVA
-4.8
ComEd # 3 MVA
11.6
13kV
13kV
ComEd # 2MVA
5.5
13kV
ComEd # 1 MVA
4.7
Circuit # 4 MVA
1
CTA/Metra MVA
1.4
Circuit # 2 MVA
1.1
Circuit # 1 MVA
3.7
12.9kV
SS Connection # 3 MVA
-2.4
12.9kV
SS Connection # 2MVA
-3.6
12.9kV
SS Connection # 1 MVA
-4.1
CTA/Metra Connection # 2 MVA
-0.3
12.9kV
12.9kV
CTA/Metra Connection # 1 MVA
-1
SS MVA
10.1
CTA/Metra MVA
1.3

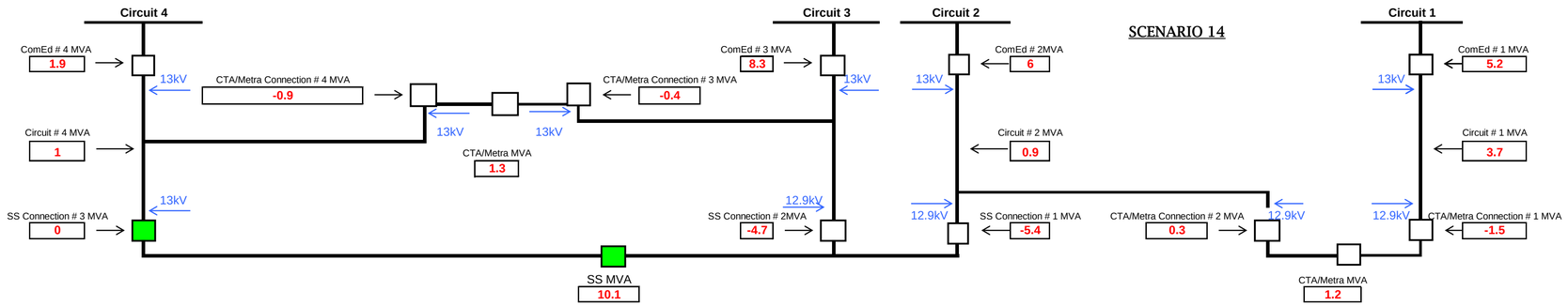
SCENARIO 14
Circuit 4
Circuit 3
Circuit 2
Circuit 1
ComEd # 4 MVA
1.9
13kV
CTA/Metra Connection # 4 MVA
-0.9
13kV
13kV
CTA/Metra Connection # 3 MVA
-0.4
ComEd # 3 MVA
8.3
13kV
13kV
ComEd # 2MVA
6
13kV
ComEd # 1 MVA
5.2
13kV
Circuit # 4 MVA
1
CTA/Metra MVA
1.3
Circuit # 2 MVA
0.9
Circuit # 1 MVA
3.7
13kV
SS Connection # 3 MVA
0
12.9kV
SS Connection # 2MVA
-4.7
12.9kV
SS Connection # 1 MVA
-5.4
CTA/Metra Connection # 2 MVA
0.3
12.9kV
12.9kV
CTA/Metra Connection # 1 MVA
-1.5
SS MVA
10.1
CTA/Metra MVA
1.2

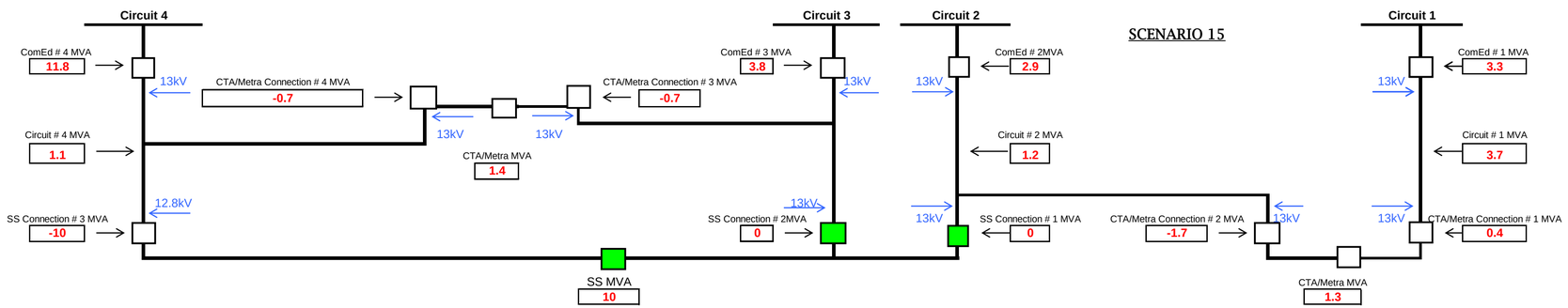
SCENARIO 15
Circuit 4
Circuit 3
Circuit 2
Circuit 1
ComEd # 4 MVA
11.8
13kV
CTA/Metra Connection # 4 MVA
-0.7
13kV
13kV
CTA/Metra Connection # 3 MVA
-0.7
ComEd # 3 MVA
3.8
13kV
13kV
ComEd # 2MVA
2.9
13kV
ComEd # 1 MVA
3.3
13kV
Circuit # 4 MVA
1.1
CTA/Metra MVA
1.4
Circuit # 2 MVA
1.2
Circuit # 1 MVA
3.7
12.8kV
SS Connection # 3 MVA
-10
13kV
SS Connection # 2MVA
0
13kV
SS Connection # 1 MVA
0
CTA/Metra Connection # 2 MVA
-1.7
13kV
13kV
CTA/Metra Connection # 1 MVA
0.4
SS MVA
10
CTA/Metra MVA
1.3

#

#

#

#

#

#

#

#

M CYME Study Results

Scenario	@ CTA / Metra -Connection #1 (MVA)	@ CTA / Metra - Connection #2 (MVA)	@ ComEd - Circuit #1 (MVA)	@ ComEd - Circuit #2 (MVA)	@ CTA / Metra - Connection #1 (kV)	@ CTA / Metra - Connection #2 (kV)	@ ComEd - Circuit #1 (kV)	@ ComEd - Circuit #2 (kV)
1	-1.5	0.1	5.5	6.2	12.6	12.6	12.9	12.9
2	0	-1.5	0	7.8	0	12.5	0	12.9
3	0	-1.5	3.9	7.8	12.7	12.5	12.9	12.9
4	-1.5	0	5.5	0	12.6	0	12.9	0
5	-1.5	0	5.5	6.2	12.6	12.6	12.9	12.9
6	3.8	-5.3	0	12.1	12.2	12.2	12.2	12.8
7	-7.6	6.1	12.2	0	12.1	12.1	12.8	12
8								

KV

M Cyme Results Comparison

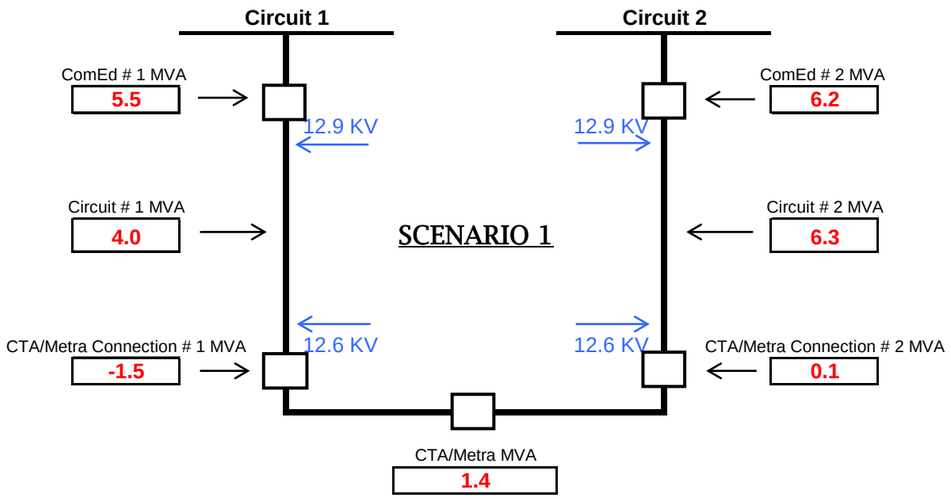

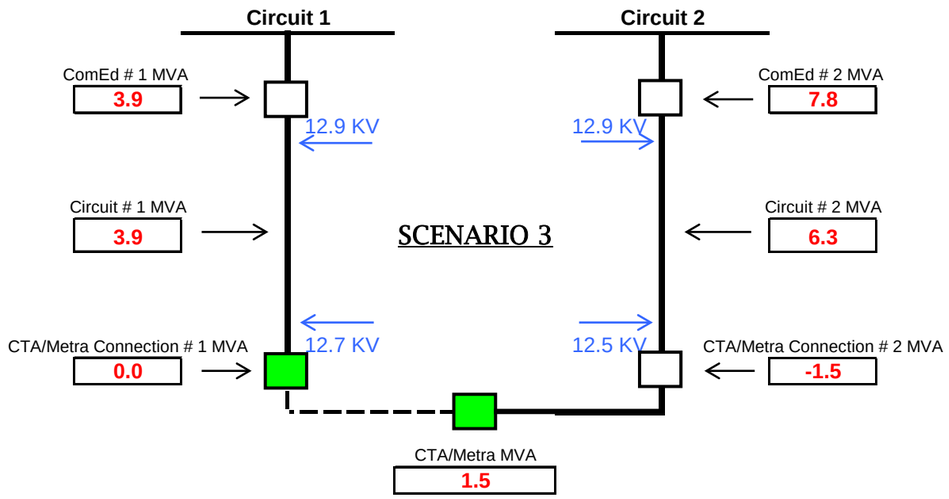

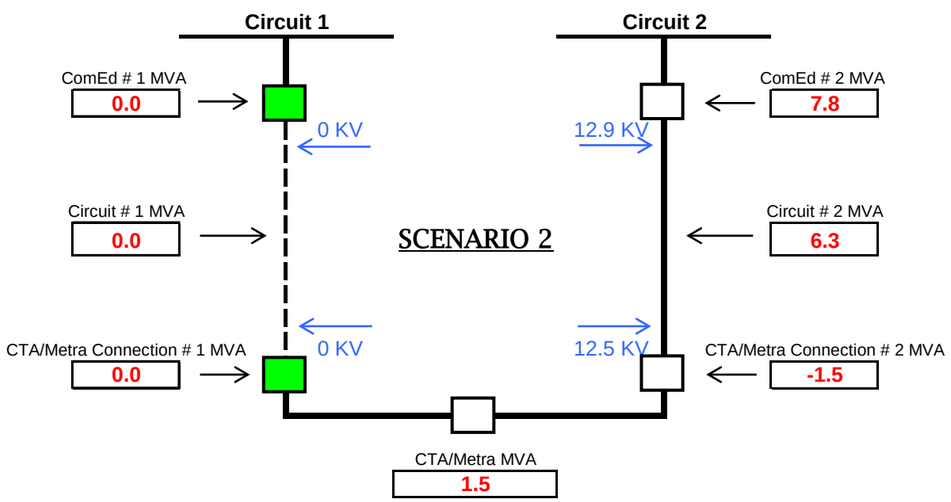

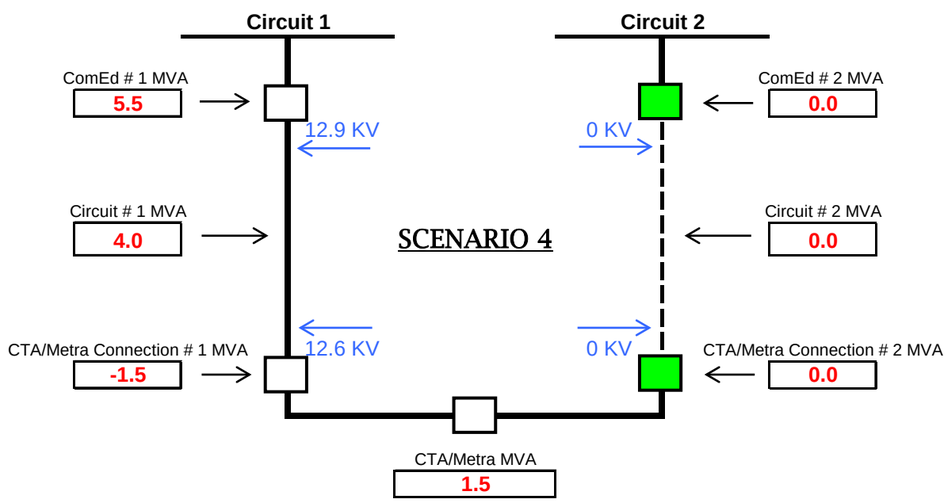

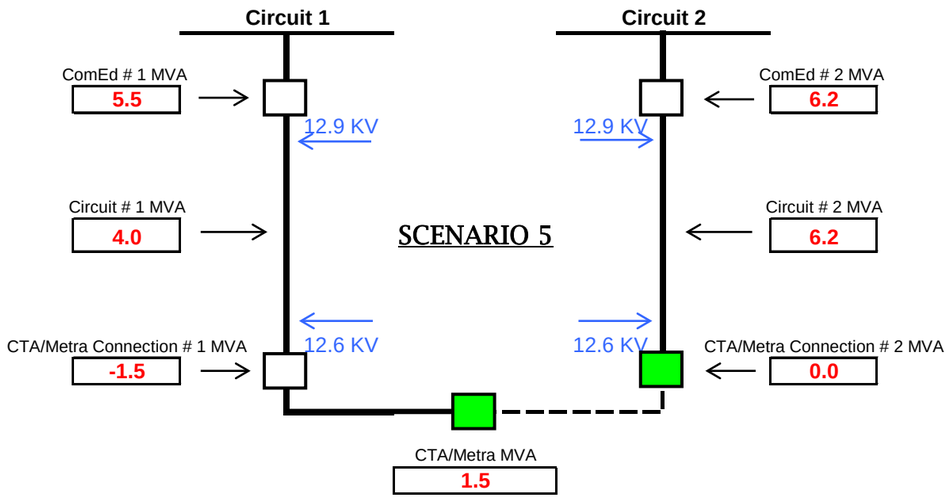
Circuit 1
Circuit 2
ComEd # 1 MVA
5.5
12.9 KV
12.9 KV
ComEd # 2 MVA
6.2
Circuit # 1 MVA
4.0
SCENARIO 5
Circuit # 2 MVA
6.2
CTA/Metra Connection # 1 MVA
-1.5
12.6 KV
12.6 KV
CTA/Metra Connection # 2 MVA
0.0
CTA/Metra MVA
1.5

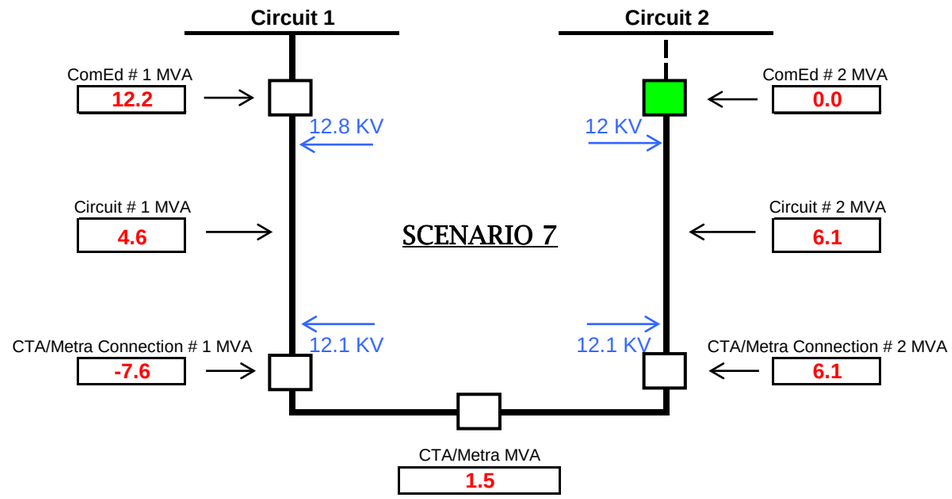
Circuit 1
Circuit 2
ComEd # 1 MVA
12.2
12.8 KV
12 KV
ComEd # 2 MVA
0.0
Circuit # 1 MVA
4.6
SCENARIO 7
Circuit # 2 MVA
6.1
CTA/Metra Connection # 1 MVA
-7.6
12.1 KV
12.1 KV
CTA/Metra Connection # 2 MVA
6.1
CTA/Metra MVA
1.5

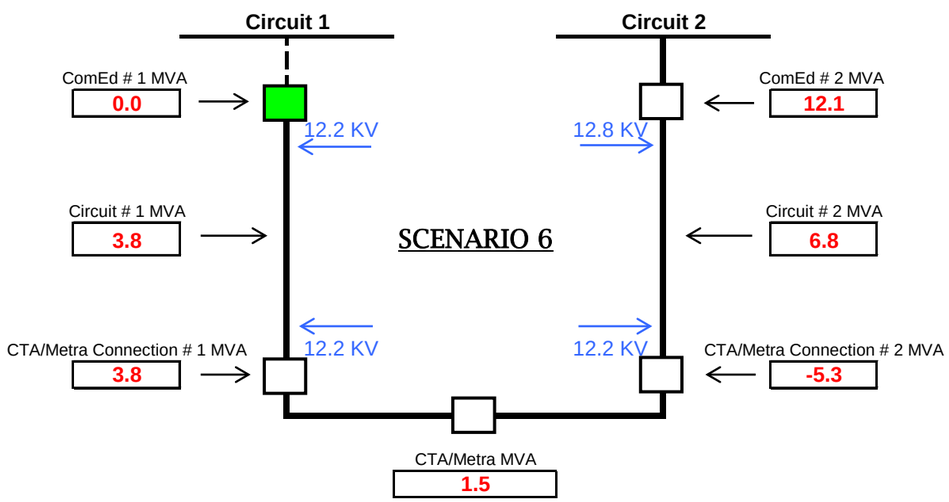
Circuit 1
Circuit 2
ComEd # 1 MVA
0.0
12.2 KV
12.8 KV
ComEd # 2 MVA
12.1
Circuit # 1 MVA
3.8
SCENARIO 6
Circuit # 2 MVA
6.8
CTA/Metra Connection # 1 MVA
3.8
12.2 KV
12.2 KV
CTA/Metra Connection # 2 MVA
-5.3
CTA/Metra MVA
1.5

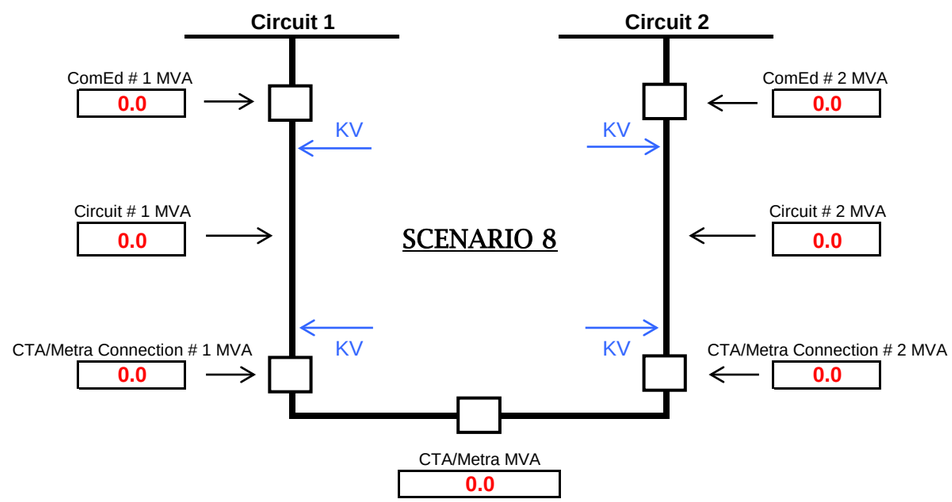
Circuit 1
Circuit 2
ComEd # 1 MVA
0.0
KV
KV
ComEd # 2 MVA
0.0
Circuit # 1 MVA
0.0
SCENARIO 8
Circuit # 2 MVA
0.0
CTA/Metra Connection # 1 MVA
0.0
KV
KV
CTA/Metra Connection # 2 MVA
0.0
CTA/Metra MVA
0.0

M CTA CYME Study Information

- M CTA ([redacted]) substation load was obtained from Cedar Loads. Peak load for each feeding line is [redacted] KVA with assumed PF=[redacted].

- [redacted] APT load information used.
  - [redacted] APT selected load date: [redacted]
  - [redacted] APT actual load on [redacted]: [redacted]/[redacted]/[redacted] ➔ [redacted]
  - [redacted] APT WA on selected load date: [redacted]
  - [redacted] WA load: [redacted]/[redacted]/[redacted] ➔ [redacted]

- [redacted] APT load information used.
  - [redacted] APT selected load date: [redacted]
  - [redacted] APT actual load on [redacted]: [redacted]/[redacted]/[redacted] ➔ [redacted]
  - [redacted] APT WA on selected load date: [redacted]
  - [redacted] WA load: [redacted]/[redacted]/[redacted]➔ [redacted]

- M CTA load allocation method
  - Validate in the CYME model all transformers, ESS loads, including [redacted] KVA for each feeding line at [redacted] per Cedar meter information.
  - Inserted switch at the point where feeder [redacted] is supporting [redacted] to loads on the [redacted] feeder network (i.e., assumed zero point of the network). This allowed for proper load allocation on the two feeders.
  - Enter feeder loads: [redacted] **for** [redacted] (Avg WA [redacted] minus the [redacted] contributed to [redacted]) and [redacted] **for** [redacted] (Avg WA [redacted] plus the [redacted]A supported from [redacted]).
  - Power factor of [redacted]% for [redacted] and [redacted] were used during allocation so as to obtain an adjusted load PF of [redacted] – [redacted] % on both feeders.
  - Ignore motors.
  - Open zero-point switch and allocate the loads.
  - Close zero-point switch and run analysis.

- Physical midpoint on feeder [redacted] is taken at cable right outside [redacted] and the endpoint is taken between [redacted] and [redacted].
- Physical midpoint on feeder [redacted] is taken on cable at intersection of [redacted] and endpoint is taken at cable after [redacted]

M CYME Study Results

Scenario	@ CTA -Connection #1 (MVA)	@ CTA - Connection #2 (MVA)	@ ComEd - Circuit #1 (MVA)	@ ComEd - Circuit #2 (MVA)	@ CTA -Connection #1 (kV)	@ CTA - Connection #2 (kV)	@ ComEd - Circuit #1 (kV)	@ ComEd - Circuit #2 (kV)	@ ComEd - Circuit #1 Midpoint (kV)	@ ComEd - Circuit #2 Midpoint (kV)	@ ComEd - Circuit #1 Endpoint (kV)	@ ComEd - Circuit #2 Endpoint (kV)
1	-1.5	+0.1	+5.5	+6.2	12.6	12.6	12.9	12.9	12.6	12.6	12.5	12.6
2	0	-1.5	0	+7.8	0	12.5	0	12.9	0	12.5	0	12.5
3	0	-1.5	+3.9	+7.8	12.7	12.5	12.9	12.9	12.7	12.5	12.6	12.5
4	-1.5	0	+5.5	0	12.6	0	12.9	0	12.6	0	12.5	0
5	-1.5	0	+5.5	+6.2	12.6	12.6	12.9	12.9	12.6	12.6	12.5	12.6
6	+3.8	-5.3	0	+12.1	12.2	12.2	12.2	12.8	12.2	12.3	12.1	12.2
7	-7.6	+6.1	+12.2	0	12.1	12.1	12.8	12.0	12.1	12.0	12.0	12.0

Scenario:

Scenario 1: @ CTA/Metra connection #1 and #2 closed, @ ComEd circuit #1 and #2 closed. This represents the normal condition.

Scenario 2: @ CTA/Metra connection #1 open and #2 closed, @ ComEd circuit #1 open and #2 closed. This represents an outage of ComEd circuit #1.

Scenario 3: @ CTA/Metra connection #1 and bus tie open and #2 closed, @ ComEd circuit #1 and #2 closed. This represents an outage of CTA/Metra Bus #1.

Scenario 4: @ CTA/Metra connection #1 closed and #2 open, @ ComEd circuit #1 closed and #2 open. This represents an outage of ComEd circuit #2.

Scenario 5: @ CTA/Metra connection #1 closed and #2 and bus tie open, @ ComEd circuit #1 and #2 closed. This represents an outage of CTA/Metra Bus #2.

Scenario 6: @ CTA/Metra connection #1 and #2 closed, @ ComEd circuit #1 open and #2 closed. This represents loss of source for ComEd circuit #1.

Scenario 7: @ CTA/Metra connection #1 and #2 closed, @ ComEd circuit #1 closed and #2 open. This represents loss of source for ComEd circuit #2.

CONFIDENTIAL AND PROPRIETARY - CEII

M SUBSTATION

MM CTA CYME Study Results

Scenario	@ CTA / Metra -Connection #1 (MVA)	@ CTA / Metra - Connection #2 (MVA)	@ ComEd - Circuit #1 (MVA)	@ ComEd - Circuit #2 (MVA)	@ CTA / Metra - Connection #1 (kV)	@ CTA / Metra - Connection #2 (kV)	@ ComEd - Circuit #1 (kV)	@ ComEd - Circuit #2 (kV)
1	-0.9	0.0	3.4	3.5	12.4	12.4	12.5	12.5
2	0.0	-0.9	0.0	4.4	0.0	12.4	0.0	12.5
3	0.0	-0.9	2.5	4.4	12.4	12.4	12.5	12.5
4	-0.9	0.0	3.4	0.0	12.4	0.0	12.5	0.0
5	-0.9	0.0	3.4	3.6	12.4	12.4	12.5	12.5
6	2.4	-3.3	0.0	6.9	12.3	12.3	12.3	12.5
7	-4.4	3.5	6.9	0.0	12.3	12.3	12.5	12.2
8								

KV

MM CTA Cyme Results Comparison

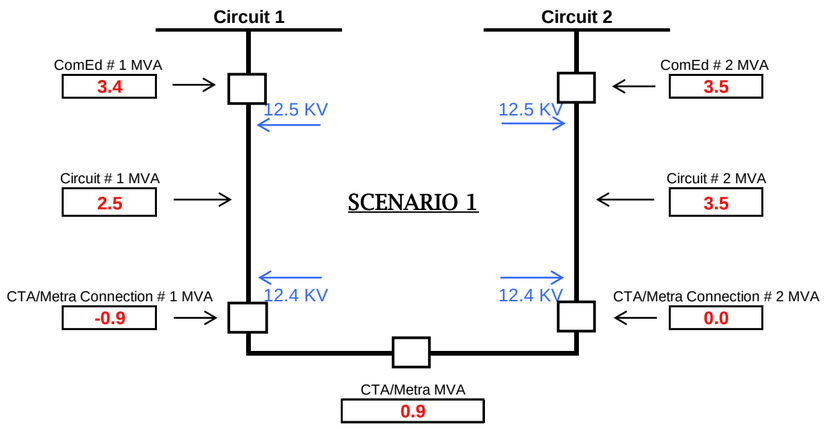

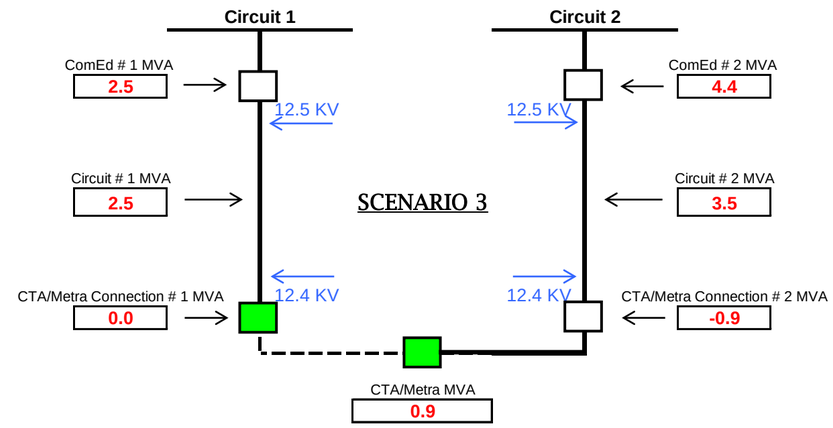

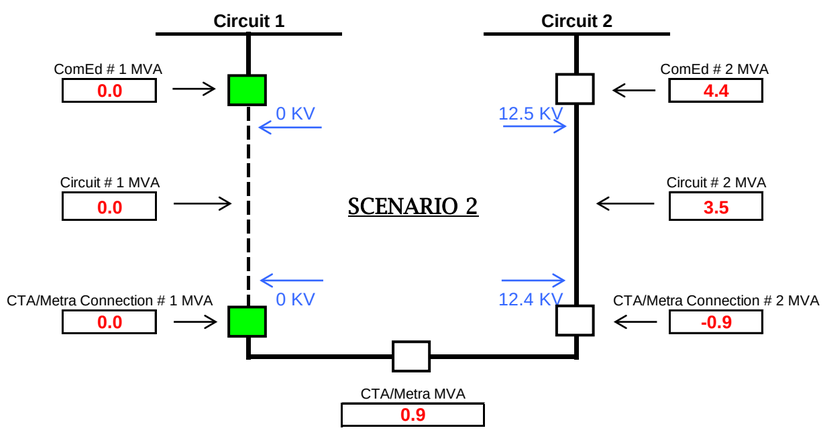

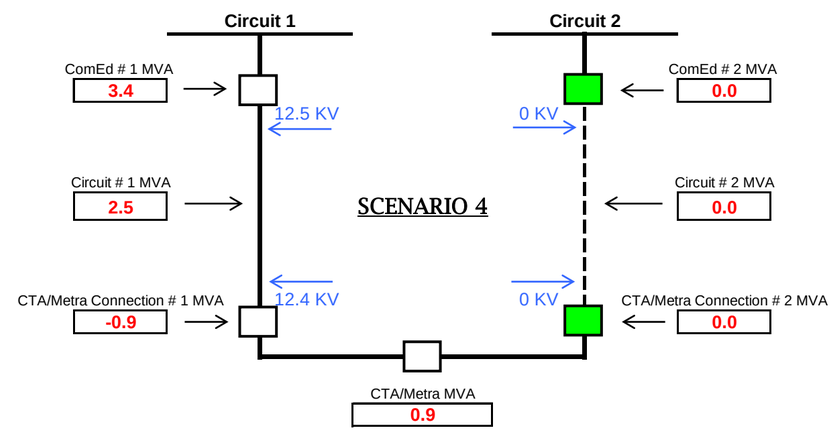

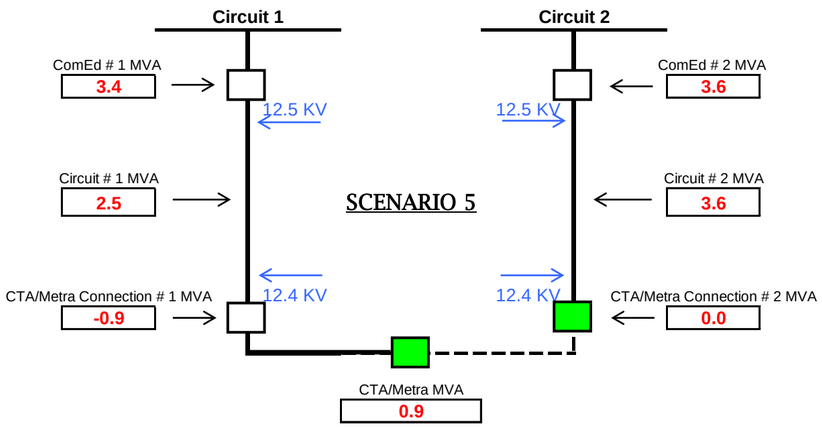
Circuit 1
Circuit 2
ComEd # 1 MVA
3.4
12.5 KV
12.5 KV
ComEd # 2 MVA
3.6
Circuit # 1 MVA
2.5
SCENARIO 5
Circuit # 2 MVA
3.6
12.4 KV
12.4 KV
CTA/Metra Connection # 1 MVA
-0.9
CTA/Metra Connection # 2 MVA
0.0
CTA/Metra MVA
0.9

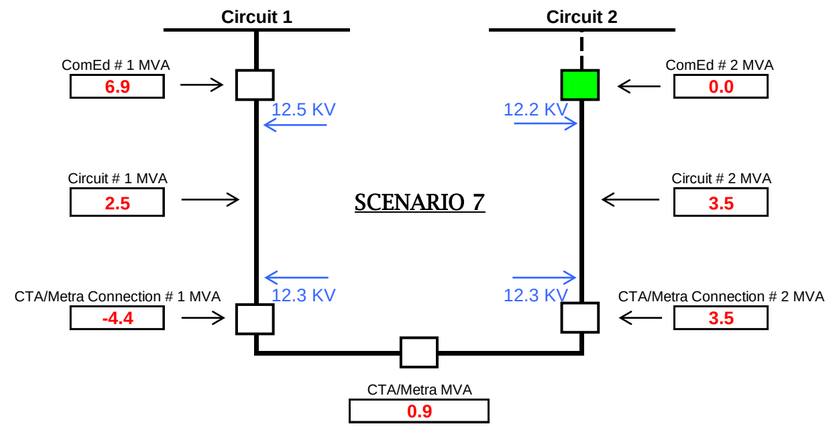
Circuit 1
Circuit 2
ComEd # 1 MVA
6.9
12.5 KV
12.2 KV
ComEd # 2 MVA
0.0
Circuit # 1 MVA
2.5
SCENARIO 7
Circuit # 2 MVA
3.5
12.3 KV
12.3 KV
CTA/Metra Connection # 1 MVA
-4.4
CTA/Metra Connection # 2 MVA
3.5
CTA/Metra MVA
0.9

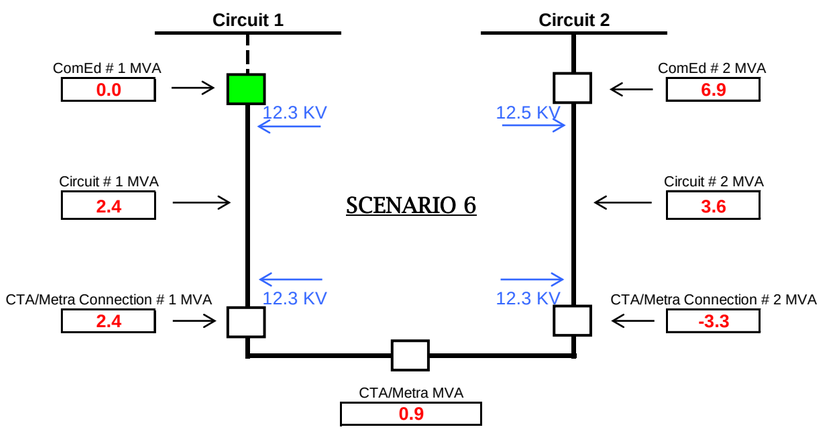
Circuit 1
Circuit 2
ComEd # 1 MVA
0.0
12.3 KV
12.5 KV
ComEd # 2 MVA
6.9
Circuit # 1 MVA
2.4
SCENARIO 6
Circuit # 2 MVA
3.6
12.3 KV
12.3 KV
CTA/Metra Connection # 1 MVA
2.4
CTA/Metra Connection # 2 MVA
-3.3
CTA/Metra MVA
0.9

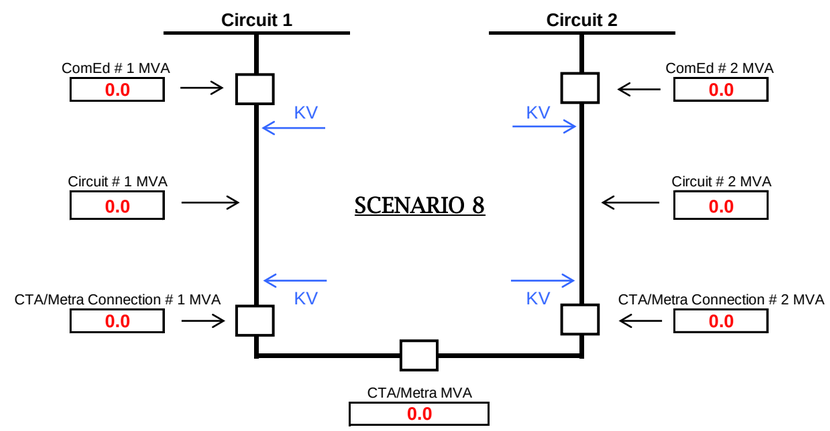
Circuit 1
Circuit 2
ComEd # 1 MVA
0.0
KV
KV
ComEd # 2 MVA
0.0
Circuit # 1 MVA
0.0
SCENARIO 8
Circuit # 2 MVA
0.0
KV
KV
CTA/Metra Connection # 1 MVA
0.0
CTA/Metra Connection # 2 MVA
0.0
CTA/Metra MVA
0.0

MM CTA CYME Study Information

- Following load demand for [redacted], [redacted], assumed load demand of [redacted] kVA at PF=[redacted] (From load information provided by CIMS, Cedar and SER).
  - [redacted] = [redacted]
  - [redacted] = [redacted]
  - [redacted] = [redacted]
  - [redacted] = [redacted]
  - [redacted] = [redacted]

- [redacted], [redacted], assumed load demand [redacted]kW at PF=[redacted] on feeder [redacted].

- [redacted], [redacted], assumed load demand [redacted]kW at PF=[redacted] on feeder [redacted]. (From load information provided by CIMS, Cedar and SER).

- [redacted], [redacted]assumed load demand [redacted]kW at PF=[redacted]. (From load information provided by CIMS, Cedar and SER).

- [redacted], [redacted]assumed load demand [redacted]kW at PF=[redacted]. (From load information provided by CIMS, Cedar and SER).

- [redacted], [redacted], assumed load demand [redacted]kW at PF=[redacted]. (From load information provided by CIMS, Cedar and SER).

- [redacted], [redacted], assumed load demand [redacted]kW at PF=[redacted]. (From load information provided by CIMS, Cedar and SER).
  - [redacted]
  - [redacted]
  - [redacted]
  - [redacted]
  - [redacted]
  - [redacted]

- [redacted], [redacted], assumed load demand [redacted]kW at PF=[redacted]. (From load information provided by CIMS, Cedar and SER).

- [redacted] ([redacted]) substation load was obtained from Cedar Loads. Peak load for each feeding line is [redacted]kW, with assumed PF=[redacted].

- [redacted] APT load information used.
  - [redacted]APT selected load date: [redacted]
  - [redacted] APT actual load on [redacted]: [redacted]/[redacted]/[redacted] ➔ [redacted]
  - [redacted] APT WA on selected load date: [redacted]
  - [redacted] WA load: [redacted]/[redacted]/[redacted] ➔ [redacted]

- [redacted] APT load information used.
  - [redacted] APT selected load date: [redacted]
  - [redacted] APT actual load on [redacted]: [redacted]/[redacted]/[redacted] ➔ [redacted]
  - [redacted] APT WA on selected load date: [redacted]
  - [redacted] WA load: [redacted]/[redacted]/[redacted]➔ [redacted]

- [redacted] load allocation method
  - Validate in the CYME model all transformers, ESS loads, including [redacted] kVA for each feeding line at [redacted] per Cedar meter information.
  - Open section [redacted], (i.e., assumed zero point of the network). This allowed for proper load allocation on the feeders.
  - Power factor of [redacted]% for [redacted] and [redacted]% for [redacted] were used during allocation so as to obtain an adjusted load PF of [redacted]– [redacted]% on all feeders.
  - Ignore motors.
  - Open zero-point section [redacted] and allocate the loads.
  - Close zero-point and run analysis.

- Physical midpoint kV on feeder [redacted] is taken at section [redacted] and the endpoint kV is taken at section [redacted].

- Physical midpoint kV on feeder [redacted] is taken at section [redacted] and the endpoint kV is taken at section [redacted].

MM CTA CYME Study Results

Scenario	@ CTA -Connection #1 (MVA)	@ CTA - Connection #2 (MVA)	@ ComEd - Circuit #1 (MVA)	@ ComEd - Circuit #2 (MVA)	@ CTA -Connection #1 (kV)	@ CTA - Connection #2 (kV)	@ ComEd - Circuit #1 (kV)	@ ComEd - Circuit #2 (kV)	@ ComEd - Circuit #1 Midpoint (kV)	@ ComEd - Circuit #2 Midpoint (kV)	@ ComEd - Circuit #1 Endpoint (kV)	@ ComEd - Circuit #2 Endpoint (kV)
1	-0.9	0.0	3.4	3.5	12.4	12.4	12.5	12.5	12.4	12.4	12.4	12.3
2	0	-0.9	0	4.4	0	12.4	0	12.5	0	12.3	0	12.3
3	0	-0.9	2.5	4.4	12.4	12.4	12.5	12.5	12.4	12.3	12.4	12.3
4	-0.9	0	3.4	0	12.4	0	12.5	0	12.4	0	12.4	0
5	-0.9	0	3.4	3.6	12.4	12.4	12.5	12.5	12.4	12.4	12.4	12.3
6	2.4	-3.3	0	6.9	12.3	12.3	12.3	12.5	12.2	12.2	12.2	12.2
7	-4.4	3.5	6.9	0	12.3	12.3	12.5	12.2	12.2	12.2	12.2	12.2

Scenario:

Scenario 1: @ CTA/Metra connection #1 and #2 closed, @ ComEd circuit #1 and #2 closed. This represents the normal condition.

Scenario 2: @ CTA/Metra connection #1 open and #2 closed, @ ComEd circuit #1 open and #2 closed. This represents an outage of ComEd circuit #1.

Scenario 3: @ CTA/Metra connection #1 and bus tie open and #2 closed, @ ComEd circuit #1 and #2 closed. This represents an outage of CTA/Metra Bus #1.

Scenario 4: @ CTA/Metra connection #1 closed and #2 open, @ ComEd circuit #1 closed and #2 open. This represents an outage of ComEd circuit #2.

Scenario 5: @ CTA/Metra connection #1 closed and #2 and bus tie open, @ ComEd circuit #1 and #2 closed. This represents an outage of CTA/Metra Bus #2.

Scenario 6: @ CTA/Metra connection #1 and #2 closed, @ ComEd circuit #1 open and #2 closed. This represents loss of source for ComEd circuit #1.

Scenario 7: @ CTA/Metra connection #1 and #2 closed, @ ComEd circuit #1 closed and #2 open. This represents loss of source for ComEd circuit #2.

CONFIDENTIAL AND PROPRIETARY - CEII

MM SUBSTATION

N CYME Study Results

Scenario	@ CTA / Metra - Connection #1 (MVA)	@ CTA / Metra - Connection #2 (MVA)	@ ComEd - Circuit #1 (MVA)	@ ComEd - Circuit #2 (MVA)	@ CTA / Metra - Connection #1 (kV)	@ CTA / Metra - Connection #2 (kV)	@ ComEd - Circuit #1 (kV)	@ ComEd - Circuit #2 (kV)
1	0.5	-4.0	6.5	5.5	12.3	12.3	12.4	12.4
2	0.0	-3.5	0.0	5.0	0.0	12.3	0.0	12.5
3	0.0	-3.5	6.9	5.0	12.3	12.3	12.4	12.5
4	-3.5	0.0	10.5	0.0	12.2	0.0	12.3	0.0
5	-3.5	0.0	10.5	1.7	12.2	12.5	12.3	12.5
6	6.9	-10.4	0.0	12.2	12.1	12.1	12.1	12.3
7	-5.0	1.7	12.2	0.0	12.1	12.1	12.4	12.1
8								

N Cyme Results Comparison

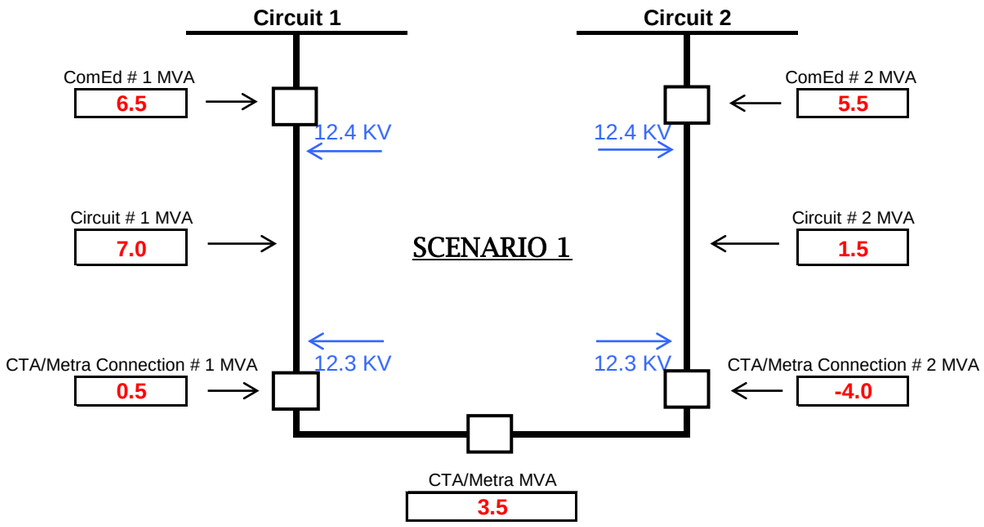

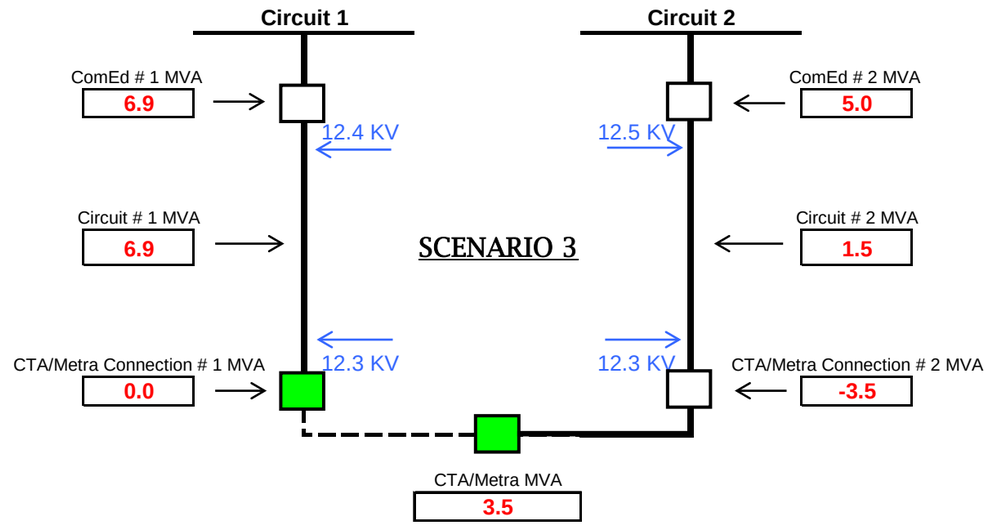

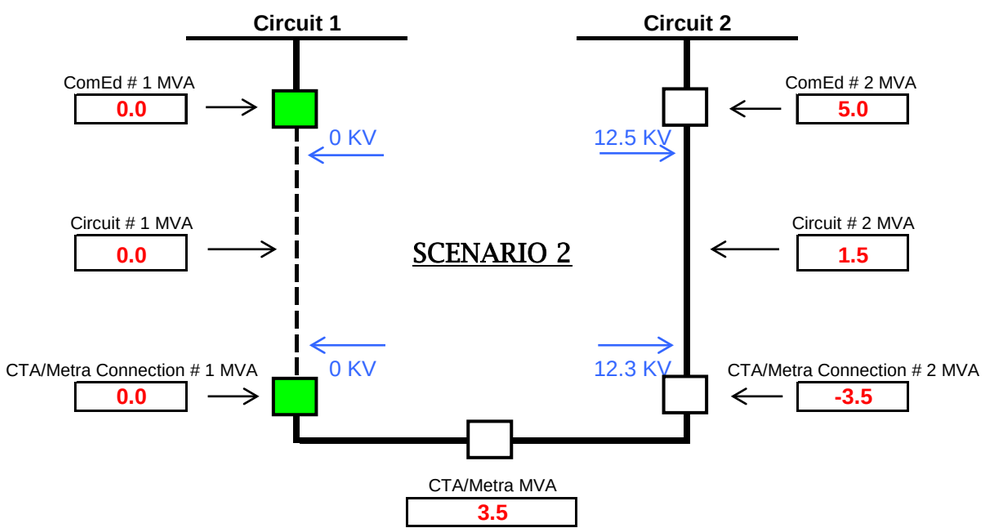

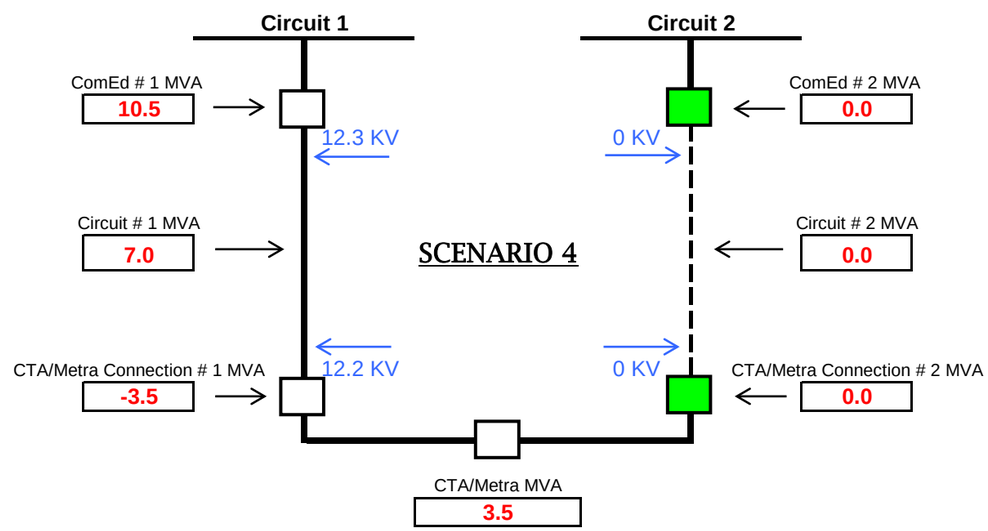

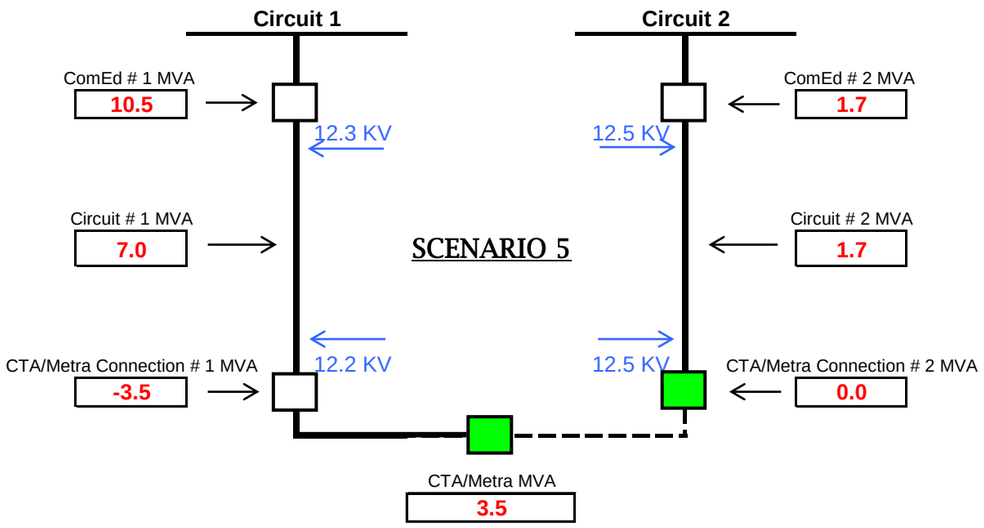
Circuit 1
Circuit 2
ComEd # 1 MVA
10.5
12.3 KV
12.5 KV
ComEd # 2 MVA
1.7
Circuit # 1 MVA
7.0
SCENARIO 5
Circuit # 2 MVA
1.7
CTA/Metra Connection # 1 MVA
-3.5
12.2 KV
12.5 KV
CTA/Metra Connection # 2 MVA
0.0
CTA/Metra MVA
3.5

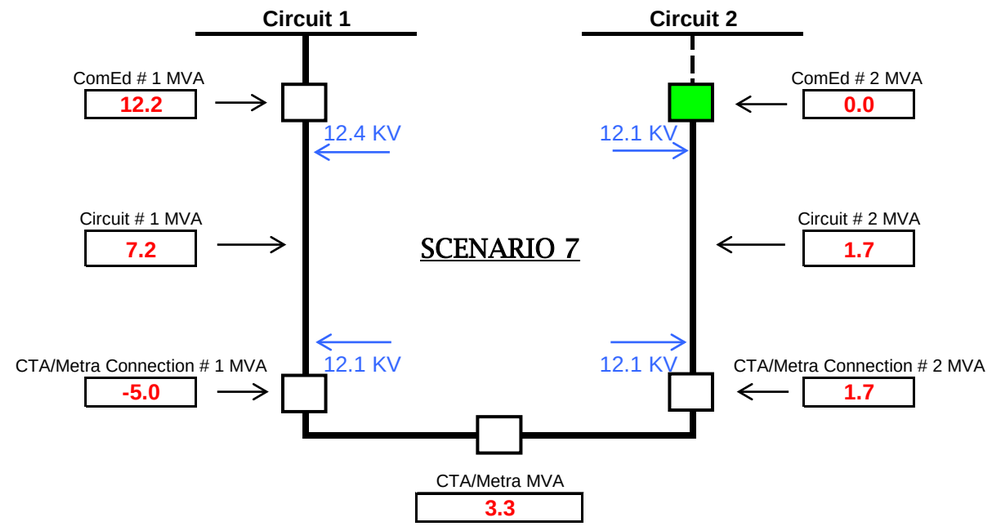
Circuit 1
Circuit 2
ComEd # 1 MVA
12.2
12.4 KV
12.1 KV
ComEd # 2 MVA
0.0
Circuit # 1 MVA
7.2
SCENARIO 7
Circuit # 2 MVA
1.7
CTA/Metra Connection # 1 MVA
-5.0
12.1 KV
12.1 KV
CTA/Metra Connection # 2 MVA
1.7
CTA/Metra MVA
3.3

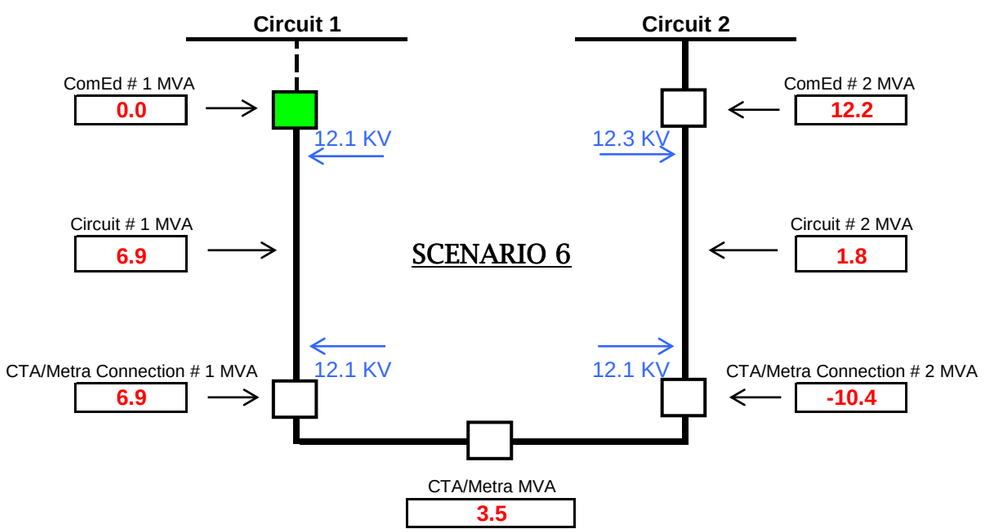
Circuit 1
Circuit 2
ComEd # 1 MVA
0.0
12.1 KV
12.3 KV
ComEd # 2 MVA
12.2
Circuit # 1 MVA
6.9
SCENARIO 6
Circuit # 2 MVA
1.8
CTA/Metra Connection # 1 MVA
6.9
12.1 KV
12.1 KV
CTA/Metra Connection # 2 MVA
-10.4
CTA/Metra MVA
3.5

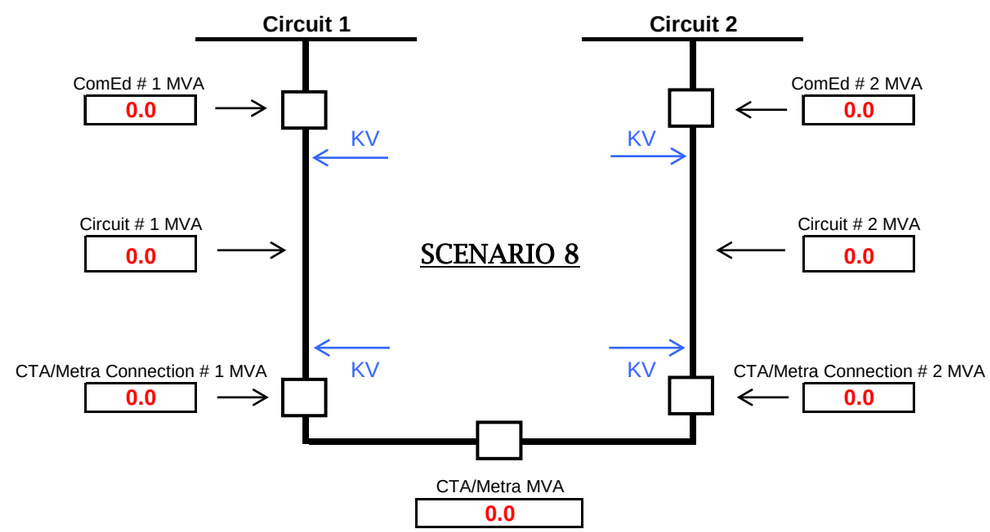
Circuit 1
Circuit 2
ComEd # 1 MVA
0.0
KV
KV
ComEd # 2 MVA
0.0
Circuit # 1 MVA
0.0
SCENARIO 8
Circuit # 2 MVA
0.0
CTA/Metra Connection # 1 MVA
0.0
KV
KV
CTA/Metra Connection # 2 MVA
0.0
CTA/Metra MVA
0.0

N- CYME Study Information

- [redacted], used loads of [redacted] kw for each point of service..
- [redacted] substation load obtained from Cedar for [redacted] (KW with [redacted] pf).
- [redacted] APT load information used.
  - [redacted] APT selected load date: [redacted]
  - [redacted] APT actual load on [redacted]: [redacted] ➔ [redacted] A
  - [redacted] APT WA on selected load date: [redacted]
  - [redacted] WA load: [redacted] A ➔ [redacted] A
- [redacted] APT load information used.
  - [redacted] APT selected load date: [redacted]
  - [redacted] APT actual load on [redacted]: [redacted] ➔ [redacted] A
  - [redacted] APT WA on selected load date: [redacted]
  - [redacted] WA load: [redacted] ➔ [redacted] A
- [redacted] CTA load allocation method
  - Open breaker to [redacted] at [redacted] substation, zero point is on [redacted] at y-joint near ovhd riser
  - Increased [redacted] by [redacted] A and reduced [redacted] by [redacted] A to compensate for flow at zero point.
  - Allocate [redacted] A with .[redacted] pf on [redacted].
  - Allocate [redacted] A with .[redacted] pf on [redacted]
  - Ignore motors
  - Close breaker on [redacted] at [redacted] substation [redacted] and run analysis.
- Feeder [redacted] mid point is section #340569857 & end point is section #1022845620
- Feeder [redacted] mid point is section #340574566 & end point is at section #340342462

N- CYME Study Results

Scenario	@ CTA -Connection #1 (MVA)	@ CTA - Connection #2 (MVA)	@ ComEd - Circuit #1 (MVA)	@ ComEd - Circuit #2 (MVA)	@ CTA -Connection #1 (kV)	@ CTA - Connection #2 (kV)	@ ComEd - Circuit #1 (kV)	@ ComEd - Circuit #2 (kV)	@ ComEd - Circuit #1 Midpoint (kV)	@ ComEd - Circuit #2 Midpoint (kV)	@ ComEd - Circuit #1 Endpoint (kV)	@ ComEd - Circuit #2 Endpoint (kV)
1	+0.5	-4.0	+6.5	+5.5	12.3	12.3	12.4	12.4	12.3	12.4	12.3	12.3
2	0.0	-3.5	0.0	+5.0	0.0	12.3	0.0	12.5	0.0	12.4	0.0	12.3
3	0.0	-3.5	+6.9	+5.0	12.3	12.3	12.4	12.5	12.3	12.4	12.3	12.3
4	-3.5	0.0	+10.5	0.0	12.2	0.0	12.3	0.0	12.2	0.0	12.1	0.0
5	-3.5	0.0	+10.5	+1.7	12.2	12.5	12.3	12.5	12.2	12.5	12.1	12.5
6	+6.9	-10.4	0.0	+12.2	12.1	12.1	12.1	12.3	12.0	12.1	11.9	12.0
7	-5.0	+1.7	+12.2	0.0	12.1	12.1	12.4	12.1	12.2	12.1	12.1	12.1

Scenario:

Scenario 1: @ CTA/Metra connection #1 and #2 closed, @ ComEd circuit #1 and #2 closed. This represents the normal condition.

Scenario 2: @ CTA/Metra connection #1 open and #2 closed, @ ComEd circuit #1 open and #2 closed. This represents an outage of ComEd circuit #1.

Scenario 3: @ CTA/Metra connection #1 and bus tie open and #2 closed, @ ComEd circuit #1 and #2 closed. This represents an outage of CTA/Metra Bus #1.

Scenario 4: @ CTA/Metra connection #1 closed and #2 open, @ ComEd circuit #1 closed and #2 open. This represents an outage of ComEd circuit #2.

Scenario 5: @ CTA/Metra connection #1 closed and #2 and bus tie open, @ ComEd circuit #1 and #2 closed. This represents an outage of CTA/Metra Bus #2.

Scenario 6: @ CTA/Metra connection #1 and #2 closed, @ ComEd circuit #1 open and #2 closed. This represents loss of source for ComEd circuit #1.

Scenario 7: @ CTA/Metra connection #1 and #2 closed, @ ComEd circuit #1 closed and #2 open. This represents loss of source for ComEd circuit #2.

NN CYME Study Results

Scenario	@ CTA / Metra -Connection #1 (MVA)	@ CTA / Metra - Connection #2 (MVA)	@ ComEd - Circuit #1 (MVA)	@ ComEd - Circuit #2 (MVA)	@ CTA / Metra - Connection #1 (kV)	@ CTA / Metra - Connection #2 (kV)	@ ComEd - Circuit #1 (kV)	@ ComEd - Circuit #2 (kV)
1	-0.6	-1.4	6.6	5.9	12.3	12.3	12.5	12.5
2	0	-2	0	6.5	0	12.3	0	12.5
3	0	-2	6	6.5	12.3	12.3	12.5	12.5
4	-2	0	8	0	12.2	0	12.5	0
5	-2	0	8	4.4	12.2	12.3	12.5	12.5
6	5.9	-7.9	0	12.8	12	12	12	12.5
7	-6.3	4.4	12.7	0	12	12	12.5	12
8								

NN CYME Results Comparison

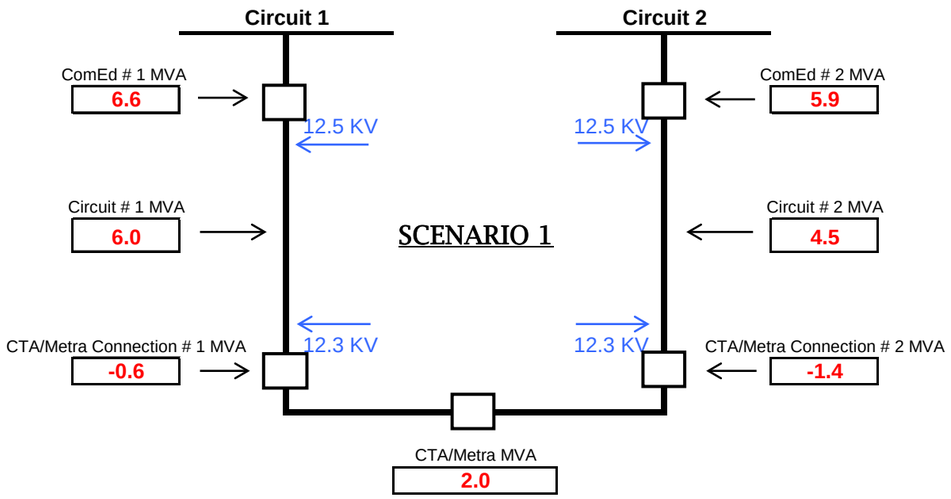

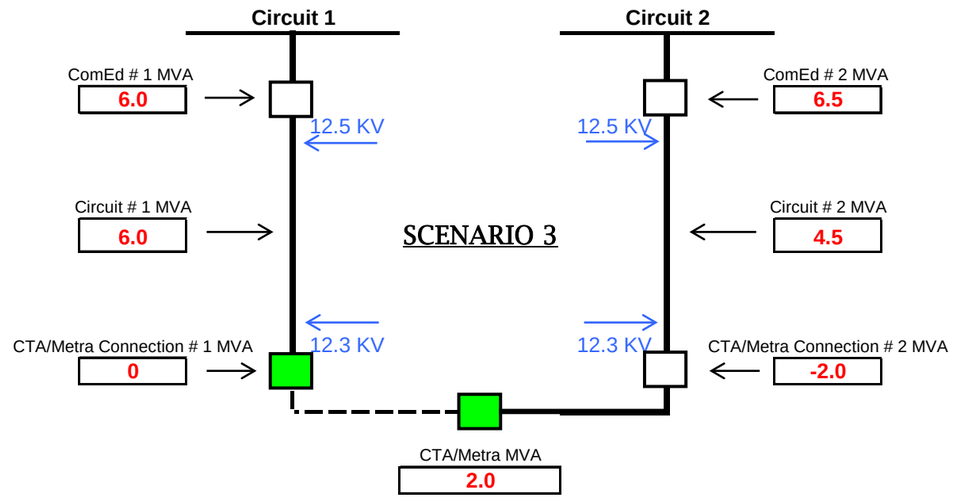

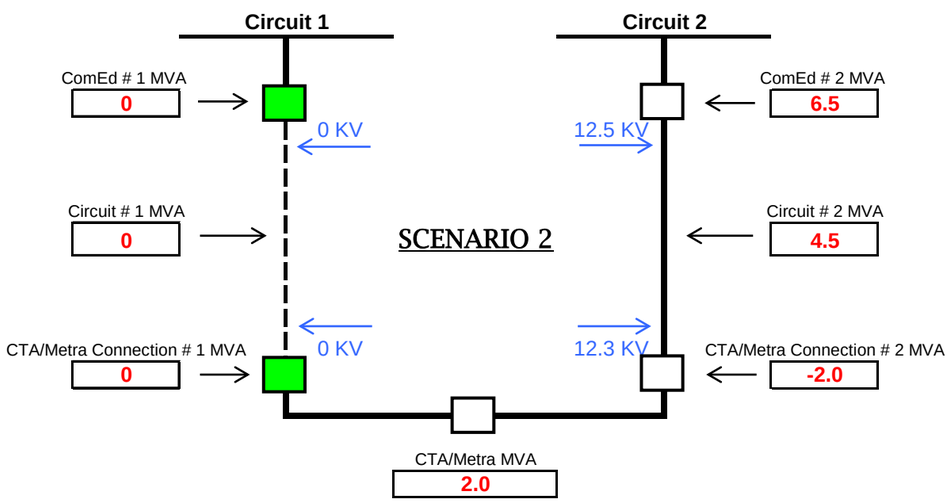

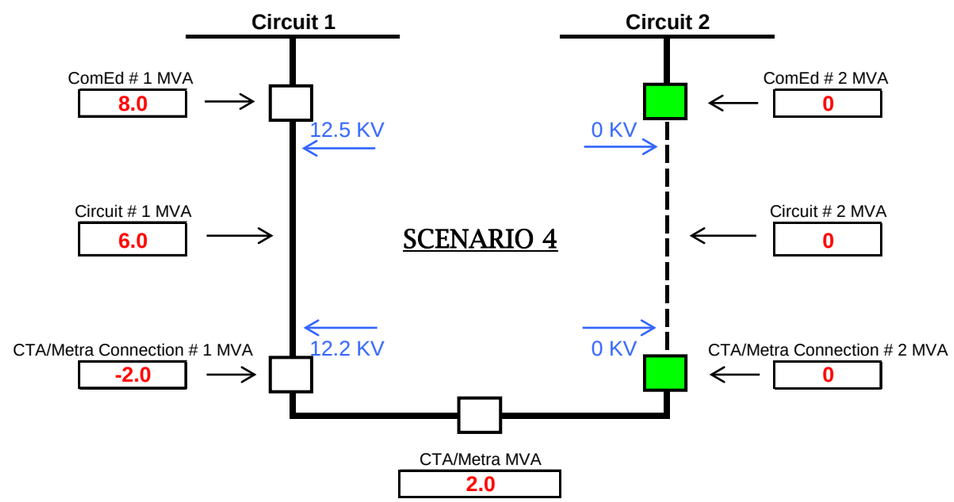

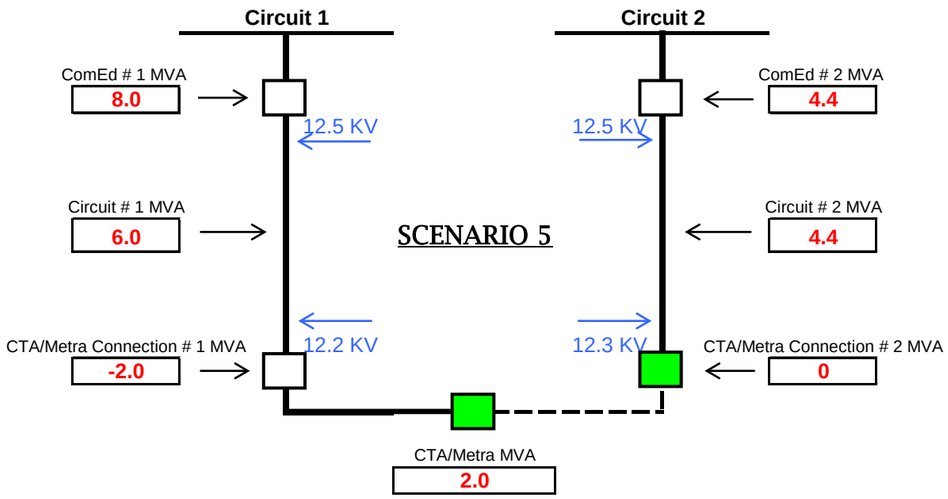
Circuit 1
Circuit 2
ComEd # 1 MVA
8.0
ComEd # 2 MVA
4.4
12.5 KV
12.5 KV
Circuit # 1 MVA
6.0
SCENARIO 5
Circuit # 2 MVA
4.4
CTA/Metra Connection # 1 MVA
-2.0
12.2 KV
12.3 KV
CTA/Metra Connection # 2 MVA
0
CTA/Metra MVA
2.0

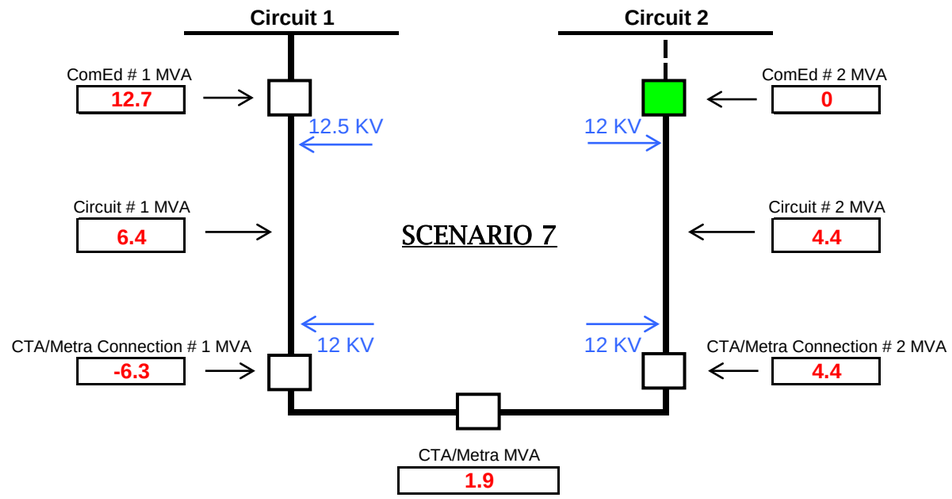
Circuit 1
Circuit 2
ComEd # 1 MVA
12.7
ComEd # 2 MVA
0
12.5 KV
12 KV
Circuit # 1 MVA
6.4
SCENARIO 7
Circuit # 2 MVA
4.4
CTA/Metra Connection # 1 MVA
-6.3
12 KV
12 KV
CTA/Metra Connection # 2 MVA
4.4
CTA/Metra MVA
1.9

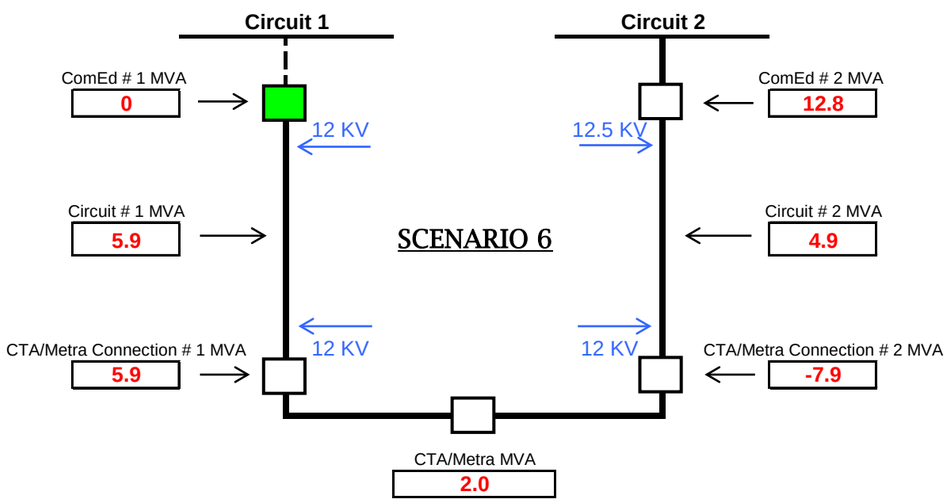
Circuit 1
Circuit 2
ComEd # 1 MVA
0
ComEd # 2 MVA
12.8
12 KV
12.5 KV
Circuit # 1 MVA
5.9
SCENARIO 6
Circuit # 2 MVA
4.9
CTA/Metra Connection # 1 MVA
5.9
12 KV
12 KV
CTA/Metra Connection # 2 MVA
-7.9
CTA/Metra MVA
2.0

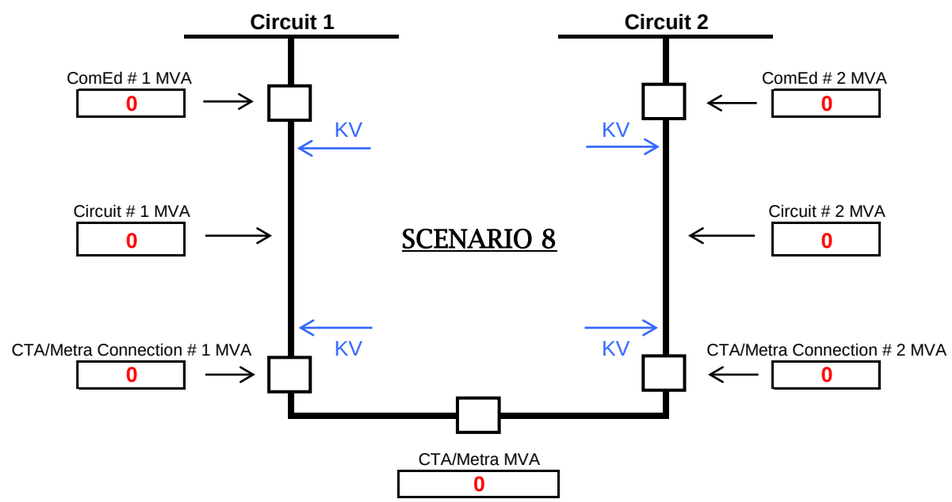
Circuit 1
Circuit 2
ComEd # 1 MVA
0
ComEd # 2 MVA
0
KV
KV
Circuit # 1 MVA
0
SCENARIO 8
Circuit # 2 MVA
0
CTA/Metra Connection # 1 MVA
0
KV
KV
CTA/Metra Connection # 2 MVA
0
CTA/Metra MVA
0

NN CYME Study Information

- [redacted], [redacted], [redacted], [redacted], [redacted], [redacted], [redacted], and [redacted]3 load obtained from CEGIS operating factor report for [redacted].
- [redacted] substation load obtained from CEDAR for [redacted] ([redacted]KW with [redacted]pf for each line).
- [redacted], [redacted], [redacted], and [redacted] at [redacted] obtained from CIMS for [redacted].
- Load for [redacted] from APT for [redacted].
- [redacted] APT load information used.
  - [redacted] APT selected load date: [redacted].
  - [redacted] APT actual load on [redacted]: [redacted]A
  - [redacted] APT WA on selected load date: [redacted]
  - [redacted] WA load: [redacted]A
- [redacted] APT load information used.
  - [redacted] APT selected load date: [redacted].
  - [redacted] APT actual load on [redacted]: [redacted]A
  - [redacted] APT WA on selected load date: [redacted]
  - [redacted] WA load: [redacted]A
- [redacted] load allocation method
  - Open BT breaker at [redacted] substation.
  - Allocate [redacted]A ([redacted]A plus [redacted]A) on [redacted] with [redacted]pf.
  - Allocate [redacted]A ([redacted]A minus [redacted]A) on [redacted] with [redacted]pf.
  - [redacted]A is the [redacted]A of flow from [redacted] with [redacted] WA at the zero point prior to radial load allocation.
  - Ignore motors.
  - Close BT breaker at [redacted] substation and run analysis.
- [redacted] midpoint KV taken at cable section 438393615 and endpoint KV taken at cable section 438234453.
- [redacted] midpoint KV taken at cable section 438314935 and endpoint KV taken at cable section 438284964.

NN CYME Study Results

Scenario	@ CTA -Connection #1 (MVA)	@ CTA - Connection #2 (MVA)	@ ComEd - Circuit #1 (MVA)	@ ComEd - Circuit #2 (MVA)	@ CTA -Connection #1 (kV)	@ CTA - Connection #2 (kV)	@ ComEd - Circuit #1 (kV)	@ ComEd - Circuit #2 (kV)	@ ComEd - Circuit #1 Midpoint (kV)	@ ComEd - Circuit #2 Midpoint (kV)	@ ComEd - Circuit #1 Endpoint (kV)	@ ComEd - Circuit #2 Endpoint (kV)
1	-0.6	-1.4	+6.6	+5.9	12.3	12.3	12.5	12.5	12.3	12.4	12.2	12.2
2	0	-2.0	0	+6.5	0	12.3	0	12.5	0	12.4	0	12.2
3	0	-2.0	+6.0	+6.5	12.3	12.3	12.5	12.5	12.4	12.4	12.3	12.2
4	-2.0	0	+8.0	0	12.2	0	12.5	0	12.3	0	12.2	0
5	-2.0	0	+8.0	+4.4	12.2	12.3	12.5	12.5	12.3	12.4	12.2	12.3
6	+5.9	-7.9	0	+12.8	12.0	12.0	12.0	12.5	12.0	12.2	12.0	12.0
7	-6.3	+4.4	+12.7	0	12.0	12.0	12.5	12.0	12.2	12.0	12.0	12.0

Scenario:

Scenario 1: @ CTA connection #1 and #2 closed, @ ComEd circuit #1 and #2 closed. This represents the normal condition.

Scenario 2: @ CTA connection #1 open and #2 closed, @ ComEd circuit #1 open and #2 closed. This represents an outage of ComEd circuit #1.

Scenario 3: @ CTA connection #1 and bus tie open and #2 closed, @ ComEd circuit #1 and #2 closed. This represents an outage of CTA Bus #1.

Scenario 4: @ CTA connection #1 closed and #2 open, @ ComEd circuit #1 closed and #2 open. This represents an outage of ComEd circuit #2.

Scenario 5: @ CTA connection #1 closed and #2 and bus tie open, @ ComEd circuit #1 and #2 closed. This represents an outage of CTA Bus #2.

Scenario 6: @ CTA connection #1 and #2 closed, @ ComEd circuit #1 open and #2 closed. This represents loss of source for ComEd circuit #1.

Scenario 7: @ CTA connection #1 and #2 closed, @ ComEd circuit #1 closed and #2 open. This represents loss of source for ComEd circuit #2.

CONFIDENTIAL AND PROPRIETARY - CEII

NN SUBSTATION

NNN CYME Study Results

Scenario	@ CTA Connection #1 (MVA)	@ CTA Connection #2 (MVA)	@SS Connection #1 (MVA)	@SS Connection #2 (MVA)	@SS Connection #3 (MVA)	@SS Connection #4 (MVA)	@ComEd Circuit #1 (MVA)	@ ComEd Circuit #2 (MVA)	@ ComEd Circuit #3 (MVA)	@ ComEd Circuit #4 (MVA)	@ CTA Connection #1 (kV)	@ CTA Connection #2 (kV)	@SS Connection #1 (kV)	@SS Connection #2 (kV)	@SS Connection #3 (kV)	@SS Connection #4 (kV)	@ ComEd Circuit #1 (kV)	@ ComEd Circuit #2 (kV)	@ ComEd Circuit #3 (kV)	@ ComEd Circuit #4 (kV)
1	-2.0	1.1	-1.1	-2.6	-4.9	-2.9	3.4	4.5	5.5	5.9	12.9	12.9	12.9	12.9	12.8	12.8	13.0	13.0	13.0	13.0
2	0.0	-0.9	0.9	-4.6	-4.9	-2.9	0.0	6.5	5.5	5.9	0.0	12.8	12.8	12.8	12.8	12.8	0.0	13.0	13.0	13.0
3	0.0	-0.9	0.9	-4.6	-4.9	-2.9	1.3	6.5	5.5	5.9	13.0	12.8	12.8	12.8	12.8	12.8	13.0	13.0	13.0	13.0
4	-0.9	0.0	0.0	-3.7	-4.9	-2.9	2.3	5.6	5.5	5.9	12.9	0.0	0.0	12.8	12.8	12.8	13.0	13.0	13.0	13.0
5	-0.9	0.0	0.0	-3.7	-4.9	-2.9	2.3	5.6	5.5	5.9	12.9	12.8	12.8	12.8	12.8	12.8	13.0	13.0	13.0	13.0
6	-3.2	2.3	-2.3	0.0	-5.6	-3.6	4.6	0.0	6.2	6.6	12.8	12.8	12.7	0.0	12.8	12.8	13.0	0.0	13.0	13.0
7	-0.9	0.0	0.0	0.0	-4.9	-2.9	2.3	1.9	5.5	5.9	12.9	12.9	12.8	13.0	12.8	12.8	13.0	13.0	13.0	13.0
8	-3.5	2.6	-2.6	-4.8	0.0	-4.0	4.9	6.7	0.0	7.1	12.8	12.8	12.8	12.8	0.0	12.8	13.0	13.0	0.0	13.0
9	-3.0	2.1	-2.1	-4.0	-5.3	0.0	4.4	6.0	5.8	0.0	12.8	12.8	12.8	12.8	12.8	0.0	13.0	13.0	13.0	0.0
10	1.3	-2.2	2.2	-5.8	-4.9	-2.9	0.0	7.8	5.5	5.9	12.7	12.7	12.7	12.7	12.8	12.8	0.0	13.0	13.0	13.0
11	-6.3	5.4	-5.4	1.8	-4.9	-2.9	7.8	0.0	5.5	5.9	12.7	12.7	12.6	12.6	12.8	12.8	13.0	12.6	13.0	13.0
12	-2.0	1.1	-1.1	-2.6	0.5	-8.1	3.4	4.5	0.0	11.3	12.9	12.9	12.9	12.9	12.6	12.6	13.0	13.0	12.6	13.0
13	-2.0	1.1	-1.1	-2.6	-10.5	2.9	3.4	4.5	11.3	0.0	12.9	12.9	12.8	12.8	12.6	12.6	13.0	13.0	13.0	12.6

NNN Cyme Results Comparison

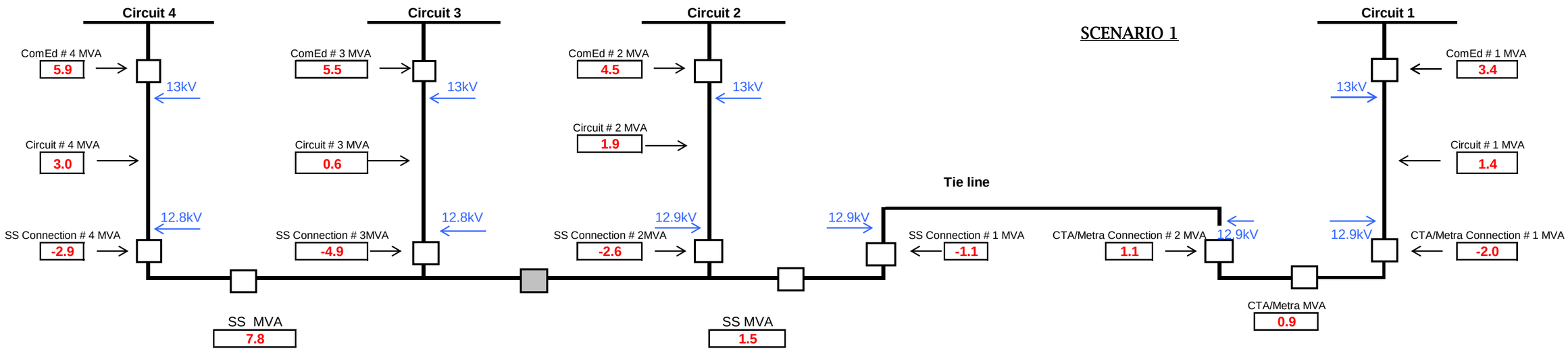

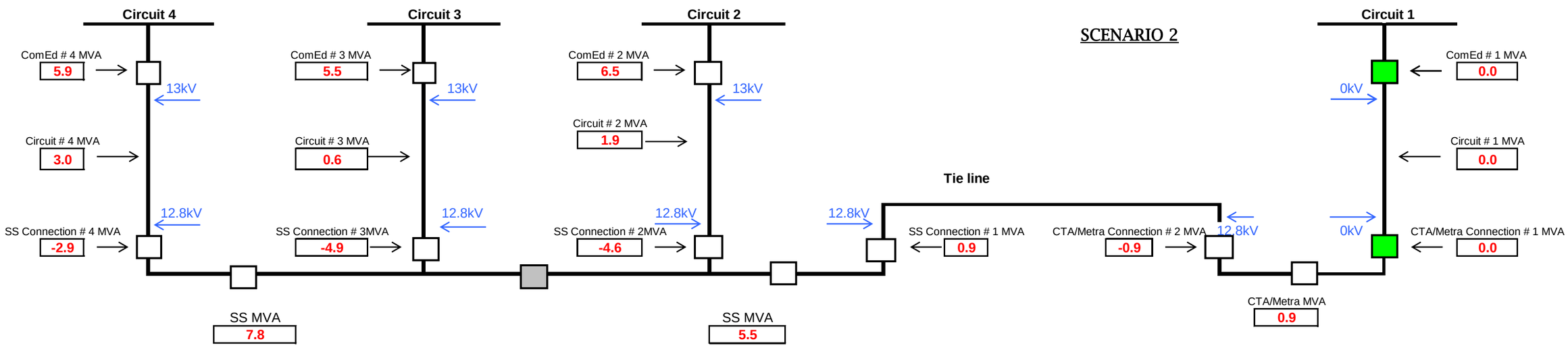

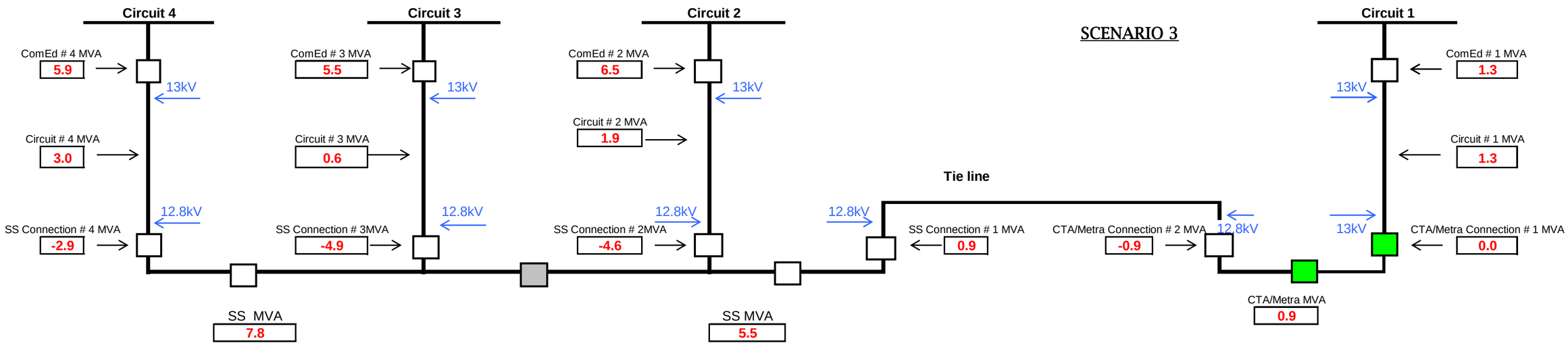
SCENARIO 3
Circuit 4
ComEd # 4 MVA
5.9
13kV
Circuit # 4 MVA
3.0
12.8kV
SS Connection # 4 MVA
-2.9
Circuit 3
ComEd # 3 MVA
5.5
13kV
Circuit # 3 MVA
0.6
12.8kV
SS Connection # 3MVA
-4.9
Circuit 2
ComEd # 2 MVA
6.5
13kV
Circuit # 2 MVA
1.9
12.8kV
SS Connection # 2MVA
-4.6
Tie line
12.8kV
SS Connection # 1 MVA
0.9
CTA/Metra Connection # 2 MVA
-0.9
12.8kV
Circuit 1
ComEd # 1 MVA
1.3
13kV
Circuit # 1 MVA
1.3
13kV
CTA/Metra Connection # 1 MVA
0.0
CTA/Metra MVA
0.9
SS MVA
7.8
SS MVA
5.5

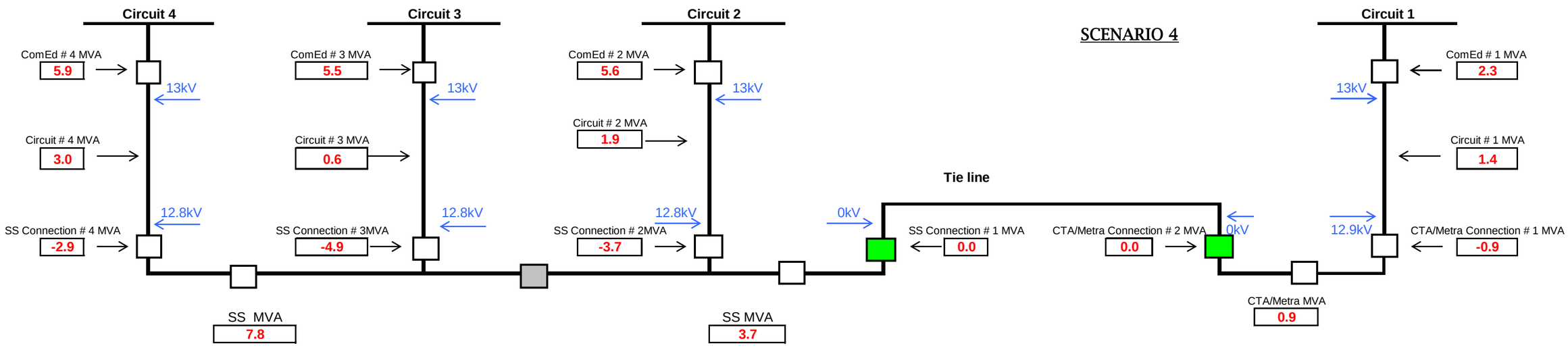
SCENARIO 4
Circuit 4
ComEd # 4 MVA
5.9
13kV
Circuit # 4 MVA
3.0
12.8kV
SS Connection # 4 MVA
-2.9
Circuit 3
ComEd # 3 MVA
5.5
13kV
Circuit # 3 MVA
0.6
12.8kV
SS Connection # 3MVA
-4.9
Circuit 2
ComEd # 2 MVA
5.6
13kV
Circuit # 2 MVA
1.9
12.8kV
SS Connection # 2MVA
-3.7
Tie line
0kV
SS Connection # 1 MVA
0.0
CTA/Metra Connection # 2 MVA
0.0
0kV
Circuit 1
ComEd # 1 MVA
2.3
13kV
Circuit # 1 MVA
1.4
12.9kV
CTA/Metra Connection # 1 MVA
-0.9
CTA/Metra MVA
0.9
SS MVA
7.8
SS MVA
3.7

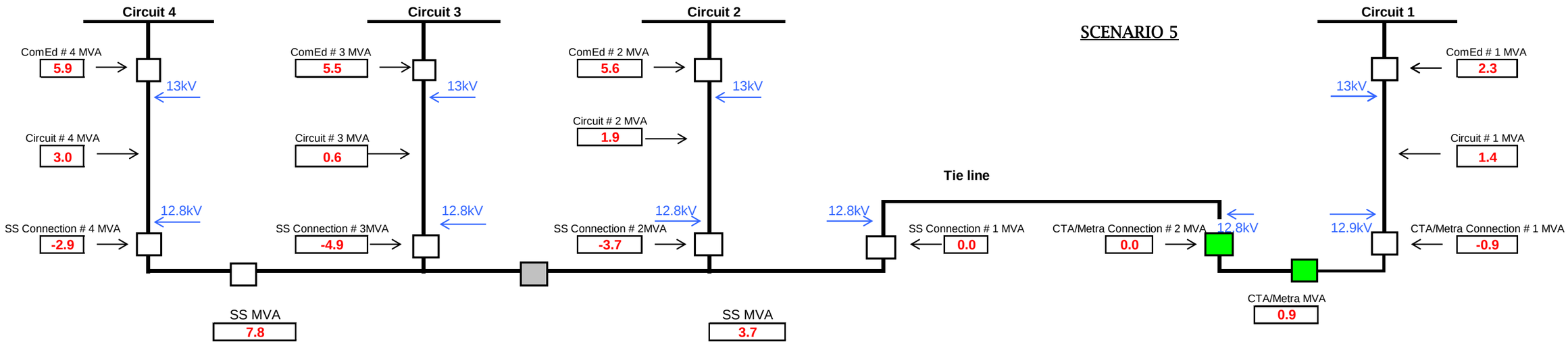
SCENARIO 5
Circuit 4
Circuit 3
Circuit 2
Circuit 1
ComEd # 4 MVA
5.9
13kV
Circuit # 4 MVA
3.0
12.8kV
SS Connection # 4 MVA
-2.9
ComEd # 3 MVA
5.5
13kV
Circuit # 3 MVA
0.6
12.8kV
SS Connection # 3MVA
-4.9
ComEd # 2 MVA
5.6
13kV
Circuit # 2 MVA
1.9
12.8kV
SS Connection # 2MVA
-3.7
Tie line
12.8kV
SS Connection # 1 MVA
0.0
CTA/Metra Connection # 2 MVA
0.0
12.8kV
ComEd # 1 MVA
2.3
13kV
Circuit # 1 MVA
1.4
12.9kV
CTA/Metra Connection # 1 MVA
-0.9
CTA/Metra MVA
0.9
SS MVA
7.8
SS MVA
3.7

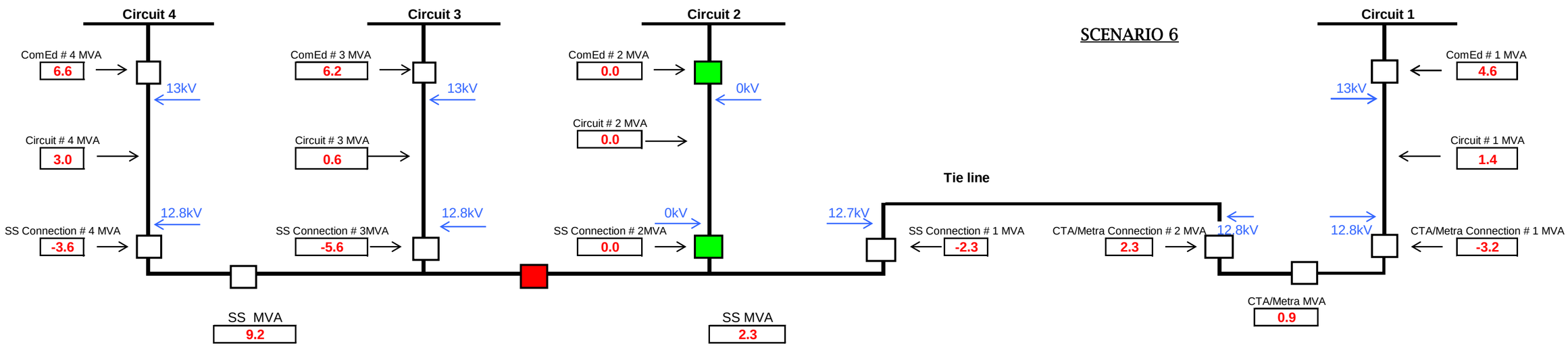
SCENARIO 6
Circuit 4
Circuit 3
Circuit 2
Circuit 1
ComEd # 4 MVA
6.6
13kV
Circuit # 4 MVA
3.0
12.8kV
SS Connection # 4 MVA
-3.6
ComEd # 3 MVA
6.2
13kV
Circuit # 3 MVA
0.6
12.8kV
SS Connection # 3MVA
-5.6
ComEd # 2 MVA
0.0
0kV
Circuit # 2 MVA
0.0
0kV
SS Connection # 2MVA
0.0
Tie line
12.7kV
SS Connection # 1 MVA
-2.3
CTA/Metra Connection # 2 MVA
2.3
12.8kV
ComEd # 1 MVA
4.6
13kV
Circuit # 1 MVA
1.4
12.8kV
CTA/Metra Connection # 1 MVA
-3.2
CTA/Metra MVA
0.9
SS MVA
9.2
SS MVA
2.3

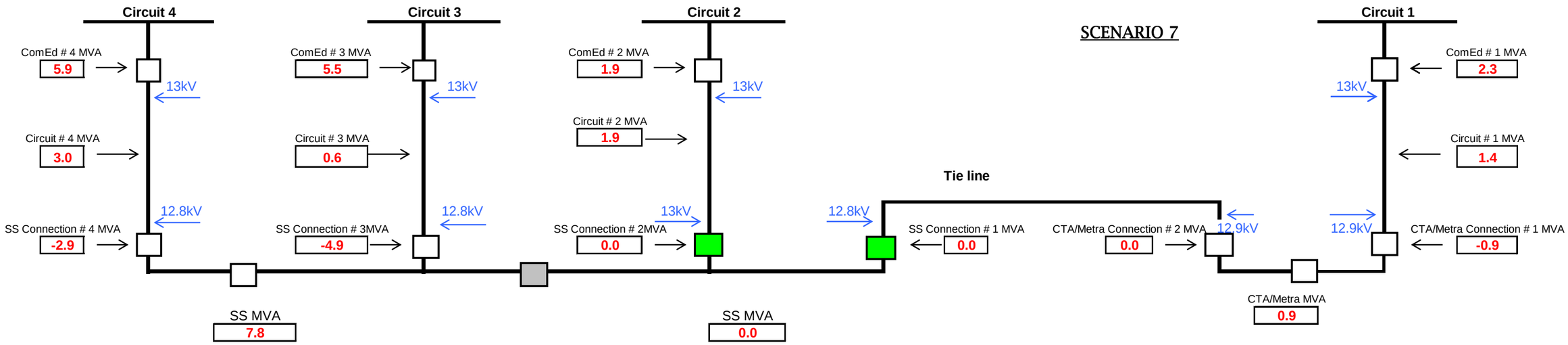
SCENARIO 7
Circuit 4
ComEd # 4 MVA
5.9
13kV
Circuit # 4 MVA
3.0
12.8kV
SS Connection # 4 MVA
-2.9
Circuit 3
ComEd # 3 MVA
5.5
13kV
Circuit # 3 MVA
0.6
12.8kV
SS Connection # 3MVA
-4.9
Circuit 2
ComEd # 2 MVA
1.9
13kV
Circuit # 2 MVA
1.9
13kV
SS Connection # 2MVA
0.0
Tie line
12.8kV
SS Connection # 1 MVA
0.0
CTA/Metra Connection # 2 MVA
0.0
12.9kV
Circuit 1
ComEd # 1 MVA
2.3
13kV
Circuit # 1 MVA
1.4
12.9kV
CTA/Metra Connection # 1 MVA
-0.9
CTA/Metra MVA
0.9
SS MVA
7.8
SS MVA
0.0

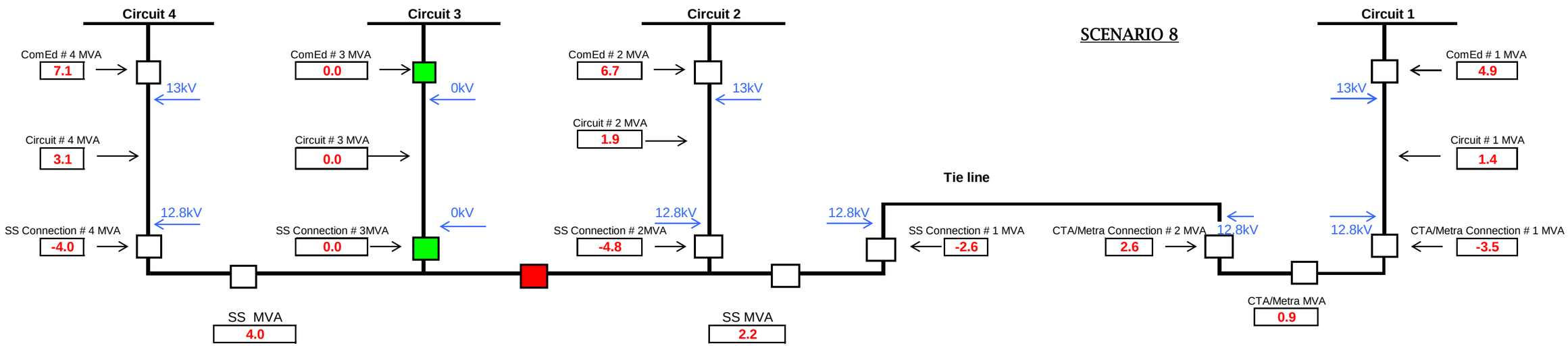
SCENARIO 8
Circuit 4
ComEd # 4 MVA
7.1
13kV
Circuit # 4 MVA
3.1
12.8kV
SS Connection # 4 MVA
-4.0
Circuit 3
ComEd # 3 MVA
0.0
0kV
Circuit # 3 MVA
0.0
0kV
SS Connection # 3MVA
0.0
Circuit 2
ComEd # 2 MVA
6.7
13kV
Circuit # 2 MVA
1.9
12.8kV
SS Connection # 2MVA
-4.8
Tie line
12.8kV
SS Connection # 1 MVA
-2.6
CTA/Metra Connection # 2 MVA
2.6
12.8kV
Circuit 1
ComEd # 1 MVA
4.9
13kV
Circuit # 1 MVA
1.4
12.8kV
CTA/Metra Connection # 1 MVA
-3.5
CTA/Metra MVA
0.9
SS MVA
4.0
SS MVA
2.2

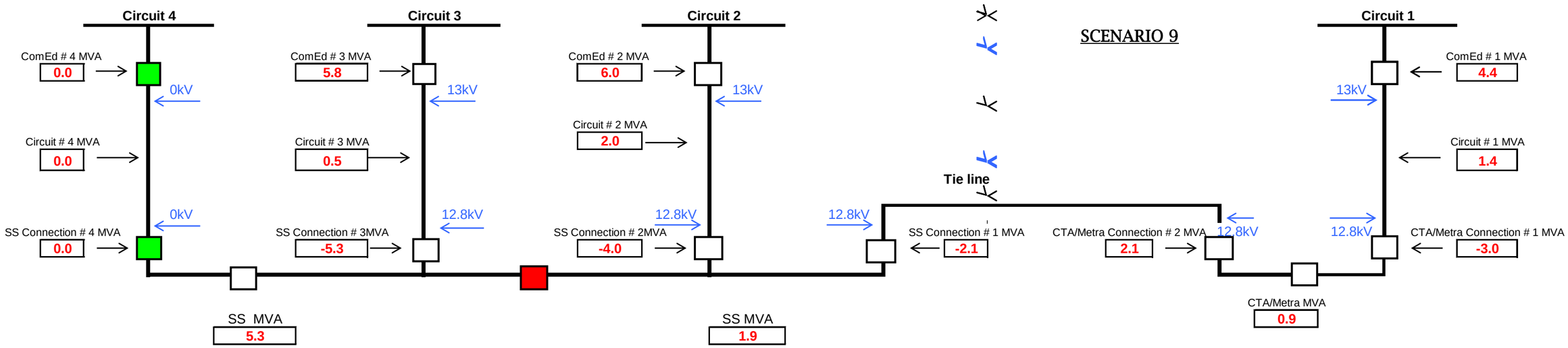
SCENARIO 9
Circuit 4
Circuit 3
Circuit 2
Circuit 1
ComEd # 4 MVA
0.0
0kV
Circuit # 4 MVA
0.0
0kV
SS Connection # 4 MVA
0.0
ComEd # 3 MVA
5.8
13kV
Circuit # 3 MVA
0.5
12.8kV
SS Connection # 3MVA
-5.3
ComEd # 2 MVA
6.0
13kV
Circuit # 2 MVA
2.0
12.8kV
SS Connection # 2MVA
-4.0
12.8kV
Tie line
SS Connection # 1 MVA
-2.1
CTA/Metra Connection # 2 MVA
2.1
12.8kV
ComEd # 1 MVA
4.4
13kV
Circuit # 1 MVA
1.4
12.8kV
CTA/Metra Connection # 1 MVA
-3.0
SS MVA
5.3
SS MVA
1.9
CTA/Metra MVA
0.9

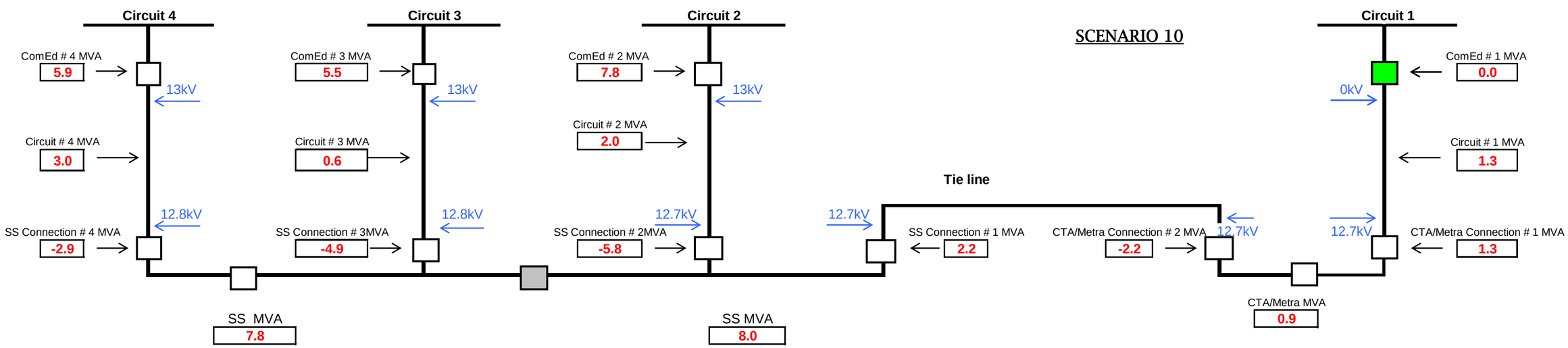
SCENARIO 10
Circuit 4
Circuit 3
Circuit 2
Circuit 1
ComEd # 4 MVA
5.9
13kV
Circuit # 4 MVA
3.0
12.8kV
SS Connection # 4 MVA
-2.9
ComEd # 3 MVA
5.5
13kV
Circuit # 3 MVA
0.6
12.8kV
SS Connection # 3MVA
-4.9
ComEd # 2 MVA
7.8
13kV
Circuit # 2 MVA
2.0
12.7kV
SS Connection # 2MVA
-5.8
Tie line
SS Connection # 1 MVA
2.2
CTA/Metra Connection # 2 MVA
-2.2
12.7kV
ComEd # 1 MVA
0.0
0kV
Circuit # 1 MVA
1.3
12.7kV
CTA/Metra Connection # 1 MVA
1.3
SS MVA
7.8
SS MVA
8.0
CTA/Metra MVA
0.9

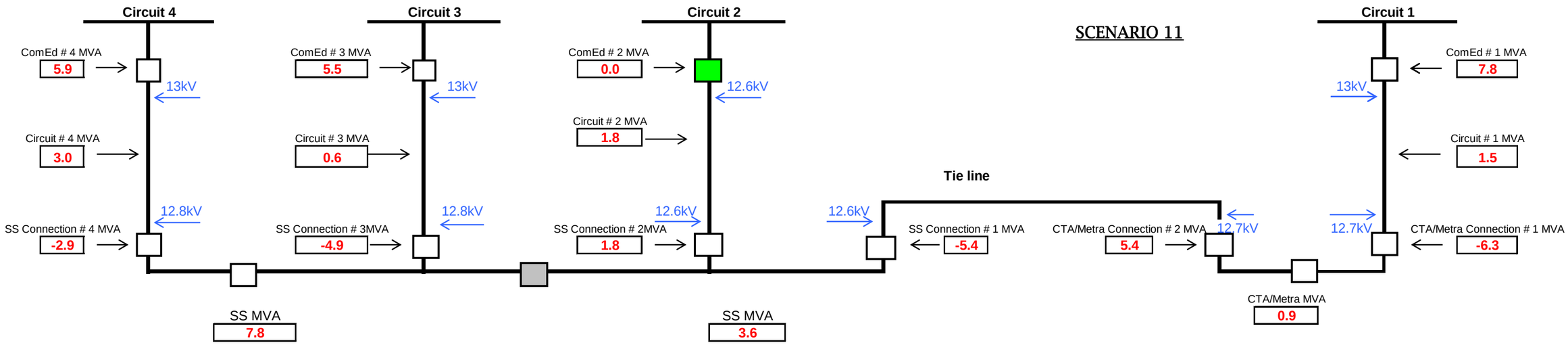
SCENARIO 11
Circuit 4
ComEd # 4 MVA
5.9
13kV
Circuit # 4 MVA
3.0
12.8kV
SS Connection # 4 MVA
-2.9
Circuit 3
ComEd # 3 MVA
5.5
13kV
Circuit # 3 MVA
0.6
12.8kV
SS Connection # 3MVA
-4.9
Circuit 2
ComEd # 2 MVA
0.0
12.6kV
Circuit # 2 MVA
1.8
12.6kV
SS Connection # 2MVA
1.8
Tie line
12.6kV
SS Connection # 1 MVA
-5.4
CTA/Metra Connection # 2 MVA
5.4
12.7kV
Circuit 1
ComEd # 1 MVA
7.8
13kV
Circuit # 1 MVA
1.5
12.7kV
CTA/Metra Connection # 1 MVA
-6.3
CTA/Metra MVA
0.9
SS MVA
7.8
SS MVA
3.6

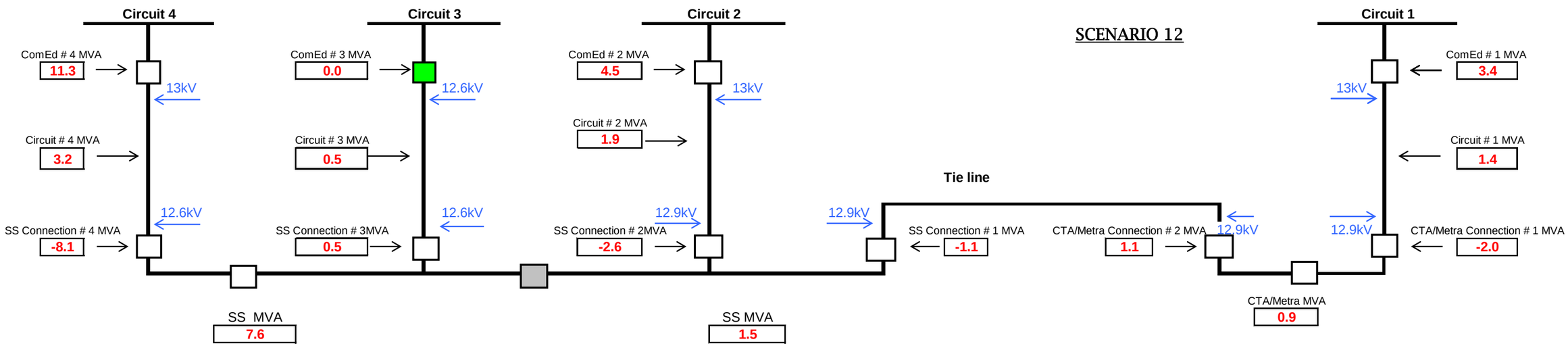
SCENARIO 12
Circuit 4
ComEd # 4 MVA
11.3
13kV
Circuit # 4 MVA
3.2
12.6kV
SS Connection # 4 MVA
-8.1
Circuit 3
ComEd # 3 MVA
0.0
12.6kV
Circuit # 3 MVA
0.5
12.6kV
SS Connection # 3MVA
0.5
Circuit 2
ComEd # 2 MVA
4.5
13kV
Circuit # 2 MVA
1.9
12.9kV
SS Connection # 2MVA
-2.6
Tie line
12.9kV
SS Connection # 1 MVA
-1.1
CTA/Metra Connection # 2 MVA
1.1
12.9kV
Circuit 1
ComEd # 1 MVA
3.4
13kV
Circuit # 1 MVA
1.4
12.9kV
CTA/Metra Connection # 1 MVA
-2.0
CTA/Metra MVA
0.9
SS MVA
7.6
SS MVA
1.5

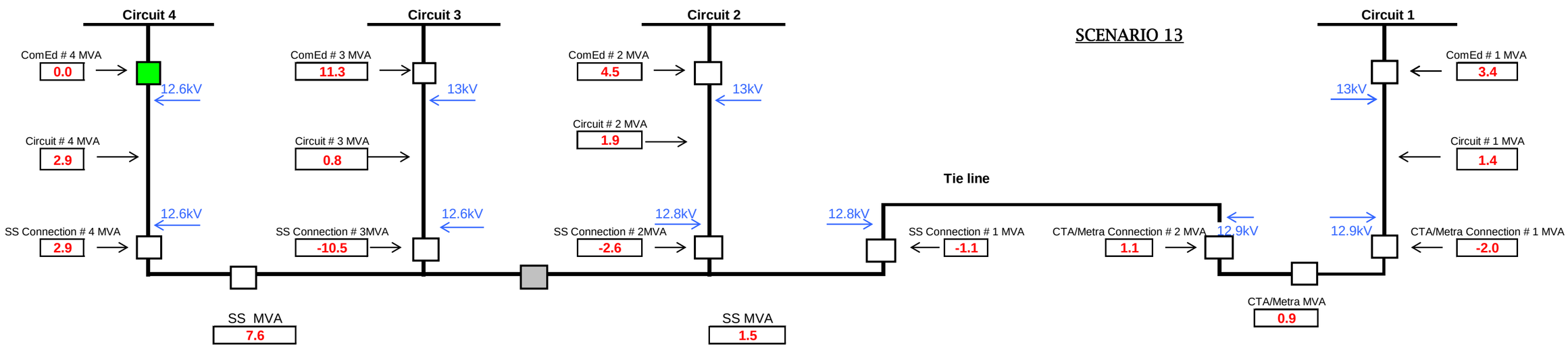
SCENARIO 13
Circuit 4
Circuit 3
Circuit 2
Circuit 1
ComEd # 4 MVA
0.0
12.6kV
Circuit # 4 MVA
2.9
12.6kV
SS Connection # 4 MVA
2.9
ComEd # 3 MVA
11.3
13kV
Circuit # 3 MVA
0.8
12.6kV
SS Connection # 3MVA
-10.5
ComEd # 2 MVA
4.5
13kV
Circuit # 2 MVA
1.9
12.8kV
SS Connection # 2MVA
-2.6
12.8kV
Tie line
SS Connection # 1 MVA
-1.1
CTA/Metra Connection # 2 MVA
1.1
12.9kV
ComEd # 1 MVA
3.4
13kV
Circuit # 1 MVA
1.4
12.9kV
CTA/Metra Connection # 1 MVA
-2.0
SS MVA
7.6
SS MVA
1.5
CTA/Metra MVA
0.9

NNN CTA CYME Study Information

- At [redacted], [redacted] substation, load was obtained from Cedar Loads. Peak load for each feeding line is [redacted]kW with assumed PF=[redacted].

- At Vault# [redacted], assumed load demand [redacted]kVA at PF=[redacted] (From load information provided by CIMS and Cedar).

- At [redacted], [redacted]. Substation, peak load for [redacted]and[redacted]are [redacted] kVA at PF=[redacted], [redacted] kVA at PF=[redacted]and [redacted] kVA at PF=[redacted]respectively (loads were obtained from APT data on [redacted]).

- [redacted] APT load information used.
  - [redacted] APT selected load date: [redacted]
  - [redacted] APT actual load on [redacted]
  - [redacted] APT WA on selected load date: [redacted]
  - [redacted] WA load: [redacted]

- [redacted] APT load information used.
  - [redacted] APT selected load date: [redacted]
  - [redacted] APT actual load on [redacted]
  - [redacted] APT WA on selected load date: [redacted]
  - [redacted] WA load: [redacted]

- [redacted] APT load information used.
  - [redacted] APT selected load date: [redacted]
  - [redacted] APT actual load on [redacted]
  - [redacted] APT WA on selected load date: [redacted]
  - [redacted] WA load: [redacted]

- [redacted] APT load information used.
  - [redacted] APT selected load date: [redacted]
  - [redacted] APT actual load on [redacted]
  - [redacted] APT WA on selected load date: [redacted]
  - [redacted] WA load: [redacted]

- [redacted]load allocation method
  - Validate in the CYME model all transformers, ESS loads, including [redacted] kVA for each feeding line at [redacted]per Cedar meter information.

  - Open [redacted] at [redacted] (zero point). This allowed for proper load allocation on the feeders.

- Enter feeder loads: [redacted] for [redacted] (Avg. WA [redacted] minus the [redacted] supported from [redacted]), [redacted] for [redacted] (Avg. WA [redacted] plus the [redacted] contributed to [redacted]).
- Power factor of [redacted] for [redacted], [redacted], [redacted] and [redacted] were used during allocation so as to obtain an adjusted load PF of [redacted] on all feeders.
- Close zero-points and run analysis.

- Physical midpoint kV on feeder [redacted] is taken at section 489438713 and physical endpoint kV is taken at section 180235812.
- Physical midpoint kV on feeder [redacted] is taken at section 387773364 and physical endpoint kV is taken at section 342292381.
- Physical midpoint kV on feeder [redacted] is taken at section 387773392 and physical endpoint kV is taken at section 342288465.
- Physical midpoint kV on feeder [redacted] is taken at section 387776089 and physical endpoint kV is taken at section 342339159.

NNN CTA CYME Study Results

Scenario	@ CTA -Connection #1 (MVA)	@ CTA - Connection #2 (MVA)	@ SS -Connection #1 (MVA)	@ SS - Connection #2 (MVA)	@ SS -Connection #3 (MVA)	@ SS - Connection #4 (MVA)	@ ComEd – Circuit #1 (MVA)	@ ComEd - Circuit #2 (MVA)	@ ComEd - Circuit #3 (MVA)	@ ComEd - Circuit #4 (MVA)	@ CTA - Connection #1 (kV)	@ CTA - Connection #2 (kV)	@ SS - Connection #1 (kV)	@ SS - Connection #2 (kV)	@ SS - Connection #3 (kV)	@ SS – Connection #4 (kV)	@ ComEd - Circuit #1 (kV)	@ ComEd - Circuit #2 (kV)	@ ComEd - Circuit #3 (kV)	@ ComEd- Circuit #4 (kV)	@ ComEd - Circuit #1 Midpoint (kV)	@ ComEd - Circuit #1 Endpoint (kV)	@ ComEd - Circuit #2 Midpoint (kV)	@ ComEd - Circuit #2 Endpoint (kV)	@ ComEd - Circuit #3 Midpoint (kV)	@ ComEd - Circuit #3 Endpoint (kV)	@ ComEd - Circuit #4 Midpoint (kV)	@ ComEd - Circuit #4 Endpoint (kV)
1	-2.0	1.1	-1.1	-2.6	-4.9	-2.9	3.4	4.5	5.5	5.9	12.9	12.9	12.9	12.9	12.8	12.8	13.0	13.0	13.0	13.0	12.9	12.9	12.9	12.0	12.9	12.9	12.9	12.8
2	0	-0.9	0.9	-4.6	-4.9	-2.9	0	6.5	5.5	5.9	0	12.8	12.8	12.8	12.8	12.8	0	13.0	13.0	13.0	0	0	12.8	12.8	12.9	12.8	12.9	12.8
3	0	-0.9	0.9	-4.6	-4.9	-2.9	1.3	6.5	5.5	5.9	13.0	12.8	12.8	12.8	12.8	12.8	13.0	13.0	13.0	13.0	13.0	13.0	12.8	12.8	12.9	12.8	12.9	12.8
4	-0.9	0	0	-3.7	-4.9	-2.9	2.3	5.6	5.5	5.9	12.9	0	0	12.8	12.8	12.8	13.0	13.0	13.0	13.0	13.0	12.9	12.9	12.8	12.9	12.8	12.9	12.8
5	-0.9	0	0	-3.7	-4.9	-2.9	2.3	5.6	5.5	5.9	12.9	12.8	12.8	12.8	12.8	12.8	13.0	13.0	13.0	13.0	13.0	12.9	12.9	12.8	12.9	12.8	12.9	12.8
6	-3.2	2.3	-2.3	0	-5.6	-3.6	4.6	0	6.2	6.6	12.8	12.8	12.7	0	12.8	12.8	13.0	0	13.0	13.0	12.9	12.8	0	0	12.9	12.8	12.9	12.8
7	-0.9	0	0	0	-4.9	-2.9	2.3	1.9	5.5	5.9	12.9	12.9	12.8	13.0	12.8	12.8	13.0	13.0	13.0	13.0	13.0	12.9	13.0	13.0	12.9	12.8	12.9	12.8
8	-3.5	2.6	-2.6	-4.8	0	-4.0	4.9	6.7	0	7.1	12.8	12.8	12.8	12.8	0	12.8	13.0	13.0	0	13.0	12.9	12.8	12.8	12.8	0	0	12.9	12.8

PUBLIC

9	**-3.0**	**2.1**	**-2.1**	**-4.0**	**-5.3**	**0**	**4.4**	**6.0**	**5.8**	**0**	**12.8**	**12.8**	**12.8**	**12.8**	**12.8**	**0**	**13.0**	**13.0**	**13.0**	**0**	**12.9**	**12.8**	**12.9**	**12.8**	**12.9**	**12.8**	**0**	**0**
10	**1.3**	**-2.2**	**2.2**	**-5.8**	**-4.9**	**-2.9**	**0**	**7.8**	**5.5**	**5.9**	**12.7**	**12.7**	**12.7**	**12.7**	**12.8**	**12.8**	**0**	**13.0**	**13.0**	**13.0**	**12.7**	**12.7**	**12.8**	**12.7**	**12.9**	**12.8**	**12.9**	**12.8**
11	**-6.3**	**5.4**	**-5.4**	**1.8**	**-4.9**	**-2.9**	**7.8**	**0**	**5.5**	**5.9**	**12.7**	**12.7**	**12.6**	**12.6**	**12.8**	**12.8**	**13.0**	**12.6**	**13.0**	**13.0**	**12.9**	**12.7**	**12.6**	**12.6**	**12.9**	**12.8**	**12.9**	**12.8**
12	**-2.0**	**1.1**	**-1.1**	**-2.6**	**0.5**	**-8.1**	**3.4**	**4.5**	**0**	**11.3**	**12.9**	**12.9**	**12.9**	**12.9**	**12.6**	**12.6**	**13.0**	**13.0**	**12.6**	**13.0**	**12.9**	**12.9**	**12.9**	**12.9**	**12.6**	**12.6**	**12.8**	**12.6**
13	**-2.0**	**1.1**	**-1.1**	**-2.6**	**-10.5**	**2.9**	**3.4**	**4.5**	**11.3**	**0**	**12.9**	**12.9**	**12.8**	**12.8**	**12.6**	**12.6**	**13.0**	**13.0**	**13.0**	**12.6**	**12.9**	**12.9**	**12.9**	**12.9**	**12.7**	**12.6**	**12.6**	**12.6**

Scenario:

Scenario 1: @ CTA/Metra connection #1 and #2 closed, @ ComEd circuit #1, #2, #3 and #4 closed, @ SS[redacted] connection #1, #2, #3 and #4 closed and bus tie 2-3 open. This represents the normal condition.

Scenario 2: @ CTA/Metra connection #1 open and #2 closed, @ ComEd circuit #1 open and #2, #3 and #4 closed, @SS[redacted] connection #1, #2, #3 and #4 closed and bus tie 2-3 open. This represents an outage of ComEd circuit #1.

Scenario 3: @ CTA/Metra connection #1 and bus tie open and #2 closed, @ ComEd circuit #1, #2, #3 and #4 closed, @SS[redacted] connection #1, #2, #3 and #4 closed and bus toe 2-3 open. This represents an outage of CTA/Metra Bus #1.

Scenario 4: @ CTA/Metra connection #1 closed and #2 open, @ ComEd circuit #1, #2, #3 and #4 closed, @SS[redacted] connection #1 open, #2, #3 and #4 closed and bus toe 2-3 open. This represents an outage of ComEd tie line.

Scenario 5: @ CTA/Metra connection #1 closed and #2 and bus tie open, @ ComEd circuit #1,#2, #3 and #4 , @SS[redacted] connection #1, #2, #3 and #4 closed and bus toe 2-3 open. This represents an outage of CTA/Metra Bus #2.

Scenario 6: @ CTA/Metra connection #1 and #2 closed, @ ComEd circuit #1, #3 and #4 closed and #2 open, @SS[redacted] connection #1, #3, #4 and bus tie 2-3 closed, #2 open. This represents an outage of ComEd circuit #2.

Scenario 7: @ CTA/Metra connection #1 and #2 closed, @ ComEd circuit #1, #2, #3 and #4 closed, @SS[redacted] connection #1, #2 and bus tie 2-3 open, #3 and #4 closed. This represents an outage of SS[redacted]

Scenario 8: @ CTA/Metra connection #1 and #2 closed , @ ComEd circuit #1, #2 and #4 closed and #3 open, @SS[redacted] connection #1, #2, #4 and bus tie 2-3 closed, #3 open. This represents an outage of ComEd circuit #3.

Scenario 9: @ CTA/Metra connection #1 and #2 closed, @ ComEd circuit #1, #2 and #3 closed and #4 open, @SS[redacted] connection #1,#2,#3 and bus tie 2-3 closed, #4 open. This represents an outage of ComEd circuit #4.

Scenario 10: @ CTA/Metra connection #1 and #2 closed, @ ComEd circuit #2, #3 and #4 closed and #1 open, @SS[redacted] connection #1,#2,#3 and #4 closed and bus tie 2-3 open. This represents loss of source for ComEd circuit #1.

Scenario 11: @ CTA/Metra connection #1 and #2 closed, @ ComEd circuit #1, #3 and #4 closed and #2 open, @SS[redacted] connection #1, #2, #3, #4 and bus tie 2-3 closed. This represents loss of source for ComEd circuit #2.

Scenario 12: @ CTA/Metra connection #1 and #2 closed, @ ComEd circuit #1, #2 and #4 closed and #3 open, @SS[redacted] connection #1, #2, #3, #4 and bus tie 2-3 closed. This represents loss of source for ComEd circuit #3.

Scenario 13: @ CTA/Metra connection #1 and #2 closed, @ ComEd circuit #1, #2 and #3 closed and #4 open, @SS[redacted] connection #1, #2, #3, #4 and bus tie 2-3 closed. This represents loss of source for ComEd circuit #4.

CONFIDENTIAL AND PROPRIETARY - CEII

NNN SUBSTATION

CONFIDENTIAL AND PROPRIETARY - CEII

N- SUBSTATION

O CYME Study Results

Scenario	@ CTA / Metra -Connection #1 (MVA)	@ CTA / Metra - Connection #2 (MVA)	@ ComEd - Circuit #1 (MVA)	@ ComEd - Circuit #2 (MVA)	@ CTA / Metra - Connection #1 (kV)	@ CTA / Metra - Connection #2 (kV)	@ ComEd - Circuit #1 (kV)	@ ComEd - Circuit #2 (kV)
1	-2.0	-0.1	4.1	4.9	12.4	12.4	12.5	12.5
2	0	-2.1	0	6.9	0	12.3	0	12.5
3	0	-2.1	2.1	6.9	12.4	12.3	12.5	12.5
4	-2.1	0	4.2	0	12.4	0	12.5	0
5	-2.1	0	4.2	4.8	12.4	12.4	12.5	12.5
6	2.1	-4.1	0	9.1	12.3	12.3	12.3	12.5
7	-6.8	4.7	9.1	0	12.2	12.2	12.5	12.2
8								

O Cyme Results Comparison

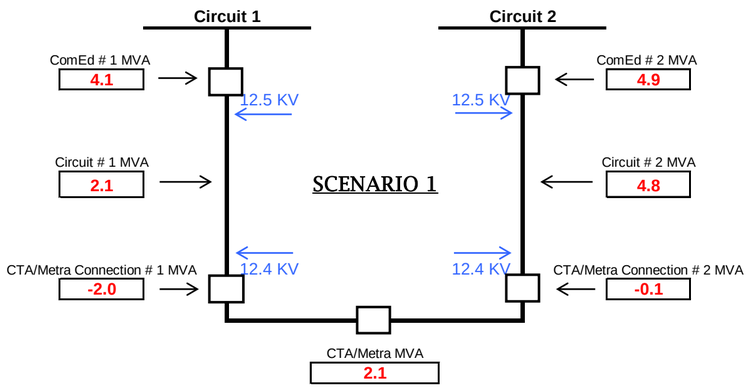

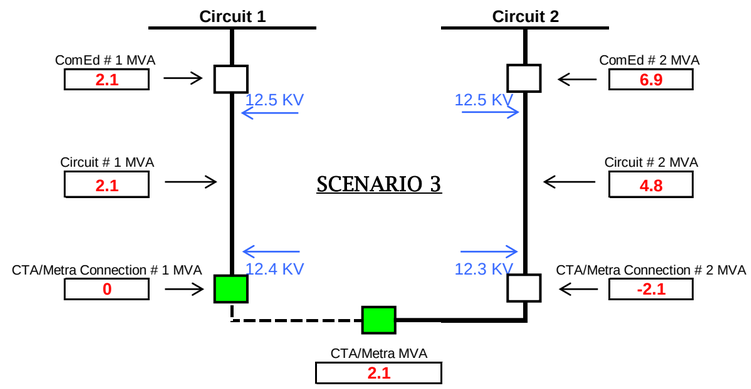

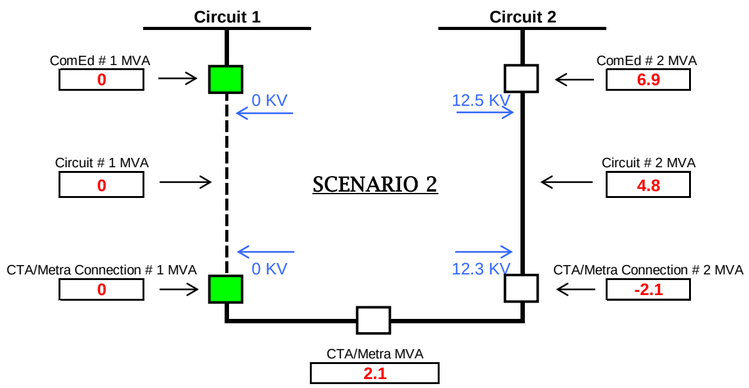

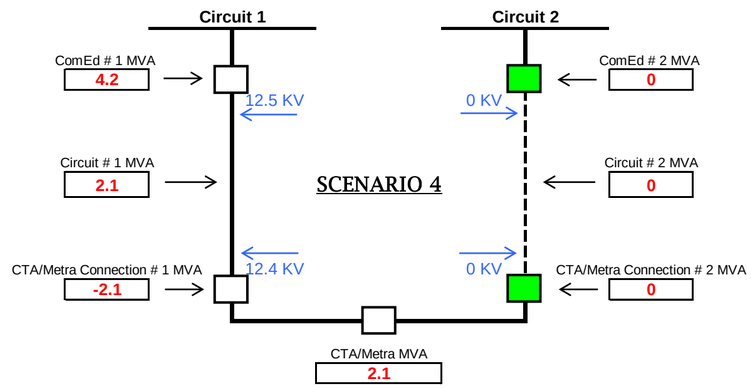

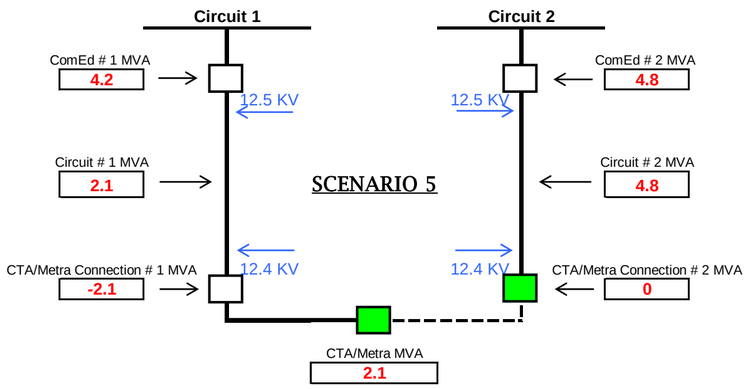
Circuit 1
Circuit 2
ComEd # 1 MVA
4.2
12.5 KV
12.5 KV
ComEd # 2 MVA
4.8
Circuit # 1 MVA
2.1
SCENARIO 5
Circuit # 2 MVA
4.8
CTA/Metra Connection # 1 MVA
-2.1
12.4 KV
12.4 KV
CTA/Metra Connection # 2 MVA
0
CTA/Metra MVA
2.1

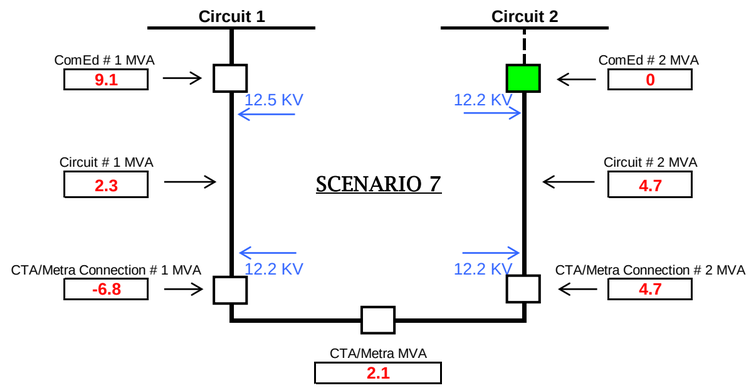
Circuit 1
Circuit 2
ComEd # 1 MVA
9.1
12.5 KV
12.2 KV
ComEd # 2 MVA
0
Circuit # 1 MVA
2.3
SCENARIO 7
Circuit # 2 MVA
4.7
CTA/Metra Connection # 1 MVA
-6.8
12.2 KV
12.2 KV
CTA/Metra Connection # 2 MVA
4.7
CTA/Metra MVA
2.1

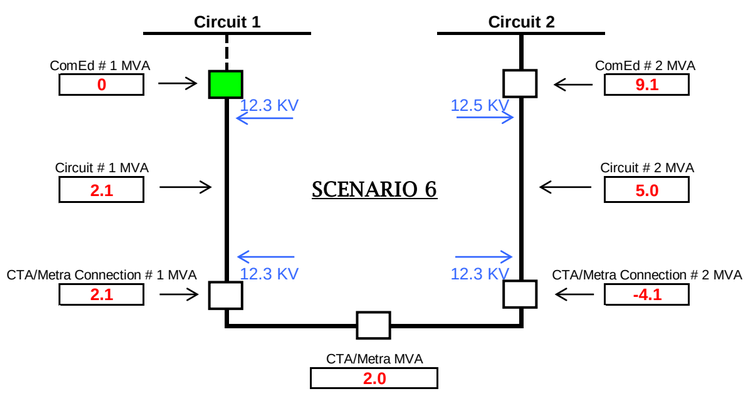
Circuit 1
Circuit 2
ComEd # 1 MVA
0
12.3 KV
12.5 KV
ComEd # 2 MVA
9.1
Circuit # 1 MVA
2.1
SCENARIO 6
Circuit # 2 MVA
5.0
CTA/Metra Connection # 1 MVA
2.1
12.3 KV
12.3 KV
CTA/Metra Connection # 2 MVA
-4.1
CTA/Metra MVA
2.0

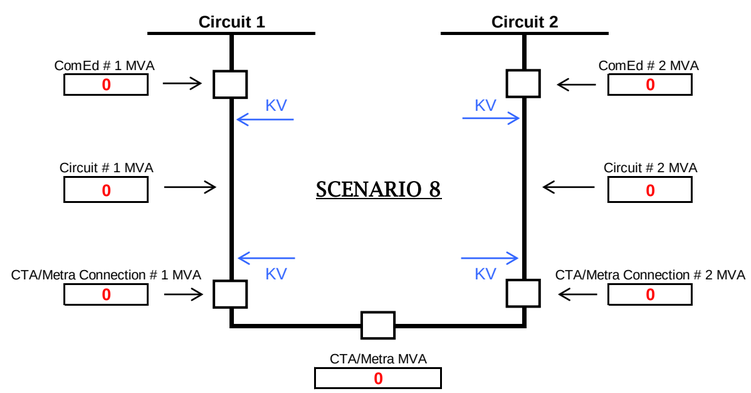
Circuit 1
Circuit 2
ComEd # 1 MVA
0
KV
KV
ComEd # 2 MVA
0
Circuit # 1 MVA
0
SCENARIO 8
Circuit # 2 MVA
0
CTA/Metra Connection # 1 MVA
0
KV
KV
CTA/Metra Connection # 2 MVA
0
CTA/Metra MVA
0

O CYME Study Information

- Warning: Transformer 12_kV-4_kV is no longer in the equipment database. The default will be used (Section: 204768027, Two-Winding Transformer setting: [redacted]) – **changed to 12_kV-4_kV_7500_KVA.**

- Warning: 25E_SM-5 is no longer in the equipment database. The default will be used (Section: 914778129, Fuse setting: [redacted]) – **changed to 25E_SM-4.**

- Warning: Cable 3-500 ALEX_480 could not be found in the equipment database. The default will be used (Section: 914778148, Underground: 914778148) – **unnecessary cable not connected to anything, removed.**

- Info: Section 914778148 is disconnected from the network (Section: 914778148) – **see above, removed.**

- [redacted] substation load obtained from CEDAR for [redacted] (KW with [redacted] pf).

- Used [redacted] APT selected load for [redacted] (KW with [redacted]pf).

- [redacted] APT load information used.
  - [redacted] APT selected load date: [redacted] ([redacted] and [redacted] was abnormally switched to [redacted] & [redacted] respectively on this day).
  - [redacted] APT actual load on [redacted] (abnormal condition): [redacted]
  - [redacted] APT actual load on [redacted] (calculated normal condition): [redacted]
  - [redacted] APT WA on selected load date: [redacted]
  - [redacted] WA load (abnormal condition): [redacted]
  - [redacted] WA load (calculated normal condition): [redacted]

- [redacted] APT load information used.
  - [redacted] APT selected load date: [redacted] ([redacted] and [redacted] was abnormally switched to [redacted] & [redacted] respectively on this day).
  - [redacted] APT actual load on [redacted] (abnormal condition): [redacted]
  - [redacted] APT actual load on [redacted] (calculated normal condition): [redacted]
  - [redacted] APT WA on selected load date: [redacted]
  - [redacted] WA load (abnormal condition): [redacted]
  - [redacted] WA load (calculated normal condition): [redacted]

O CYME Study Information

- Abnormal load calculation
  - [redacted] (carried by [redacted]) ➔ [redacted]KVA
  - [redacted] (carried by [redacted]) ➔ [redacted]KVA
  - [redacted] (carried by [redacted]) ➔ [redacted]KVA
  - [redacted] (carried by [redacted]) ➔ [redacted]KVA
  - Total KVA/Amps ➔ [redacted]KVA/[redacted]A

- Abnormal load split
  - Total actual load on [redacted] & [redacted] ([redacted]A plus [redacted]A) ➔ [redacted]A
  - [redacted] percentage of total actual load ([redacted]A/[redacted]A) ➔ [redacted]
  - [redacted] percentage of total actual load ([redacted]A/[redacted]A) ➔ [redacted]
  - [redacted] percentage of total abnormal load ([redacted] of [redacted]A) ➔ [redacted]A
  - [redacted] percentage of total abnormal load ([redacted] of [redacted]A) ➔ [redacted]A

- [redacted] load allocation method
  - Open [redacted] breaker at [redacted] substation
  - Allocate [redacted]A ([redacted]A minus [redacted]A) on [redacted].
  - Allocate [redacted]A ([redacted]A plus [redacted]A) on [redacted].
  - [redacted]A is the [redacted]A of flow from [redacted] with [redacted] WA at the zero point prior to radial load allocation.
  - Ignore motors
  - Adjust pf at source ([redacted]pf for [redacted], [redacted]pf for [redacted]) and allocate to obtain an adjusted load PF of [redacted] – [redacted] on both feeders [redacted] for [redacted], [redacted] for [redacted]).
  - Close [redacted] breaker at [redacted] substation and run analysis.

- [redacted] midpoint KV taken at cable section 438265487 and endpoint KV taken at cable section 438214197.

- [redacted] midpoint KV taken at cable section 438378750 and endpoint KV taken at cable section 438261659.

O CYME Study Results

Scenario	@ CTA -Connection #1 (MVA)	@ CTA - Connection #2 (MVA)	@ ComEd - Circuit #1 (MVA)	@ ComEd - Circuit #2 (MVA)	@ CTA -Connection #1 (kV)	@ CTA - Connection #2 (kV)	@ ComEd - Circuit #1 (kV)	@ ComEd - Circuit #2 (kV)	@ ComEd - Circuit #1 Midpoint (kV)	@ ComEd - Circuit #2 Midpoint (kV)	@ ComEd - Circuit #1 Endpoint (kV)	@ ComEd - Circuit #2 Endpoint (kV)
1	-2.0	-0.1	+4.1	+4.9	12.4	12.4	12.5	12.5	12.4	12.4	12.4	12.4
2	0.0	-2.1	0.0	+6.9	0.0	12.3	0.0	12.5	0.0	12.4	0.0	12.3
3	0.0	-2.1	+2.1	+6.9	12.4	12.3	12.5	12.5	12.5	12.4	12.4	12.3
4	-2.1	0.0	+4.2	0.0	12.4	0.0	12.5	0.0	12.4	0.0	12.4	0.0
5	-2.1	0.0	+4.2	+4.8	12.4	12.4	12.5	12.5	12.4	12.4	12.4	12.4
6	+2.1	-4.1	0.0	+9.1	12.3	12.3	12.3	12.5	12.3	12.4	12.2	12.3
7	-6.8	+4.7	+9.1	0.0	12.2	12.2	12.5	12.2	12.3	12.2	12.2	12.2

Scenario:

Scenario 1: @ CTA/Metra connection #1 and #2 closed, @ ComEd circuit #1 and #2 closed. This represents the normal condition.

Scenario 2: @ CTA/Metra connection #1 open and #2 closed, @ ComEd circuit #1 open and #2 closed. This represents an outage of ComEd circuit #1.

Scenario 3: @ CTA/Metra connection #1 and bus tie open and #2 closed, @ ComEd circuit #1 and #2 closed. This represents an outage of CTA/Metra Bus #1.

Scenario 4: @ CTA/Metra connection #1 closed and #2 open, @ ComEd circuit #1 closed and #2 open. This represents an outage of ComEd circuit #2.

Scenario 5: @ CTA/Metra connection #1 closed and #2 and bus tie open, @ ComEd circuit #1 and #2 closed. This represents an outage of CTA/Metra Bus #2.

Scenario 6: @ CTA/Metra connection #1 and #2 closed, @ ComEd circuit #1 open and #2 closed. This represents loss of source for ComEd circuit #1.

Scenario 7: @ CTA/Metra connection #1 and #2 closed, @ ComEd circuit #1 closed and #2 open. This represents loss of source for ComEd circuit #2.

CONFIDENTIAL AND PROPRIETARY - CEII

SUBSTATION

OO - CYME Study Results

Scenario	@ CTA / Metra -Connection #1 (MVA)	@ CTA / Metra - Connection #2 (MVA)	@ ComEd - Circuit #1 (MVA)	@ ComEd - Circuit #2 (MVA)	@ CTA / Metra - Connection #1 (kV)	@ CTA / Metra - Connection #2 (kV)	@ ComEd - Circuit #1 (kV)	@ ComEd - Circuit #2 (kV)
1	-1.2	-0.4	4.1	4.3	12.9	12.9	13.0	13.0
2	0.0	-1.6	0.0	5.5	0.0	12.9	0.0	13.0
3	0.0	-1.6	2.9	5.5	12.9	12.9	13.0	13.0
4	-1.6	0.0	4.6	0.0	12.9	0.0	13.0	0.0
5	-1.6	0.0	4.6	3.9	12.9	12.9	13.0	13.0
6	2.8	-4.4	0.0	8.4	12.8	12.8	12.8	13.0
7	-5.4	3.8	8.4	0.0	12.8	12.8	13.0	12.8

OO Cyme Results Comparison

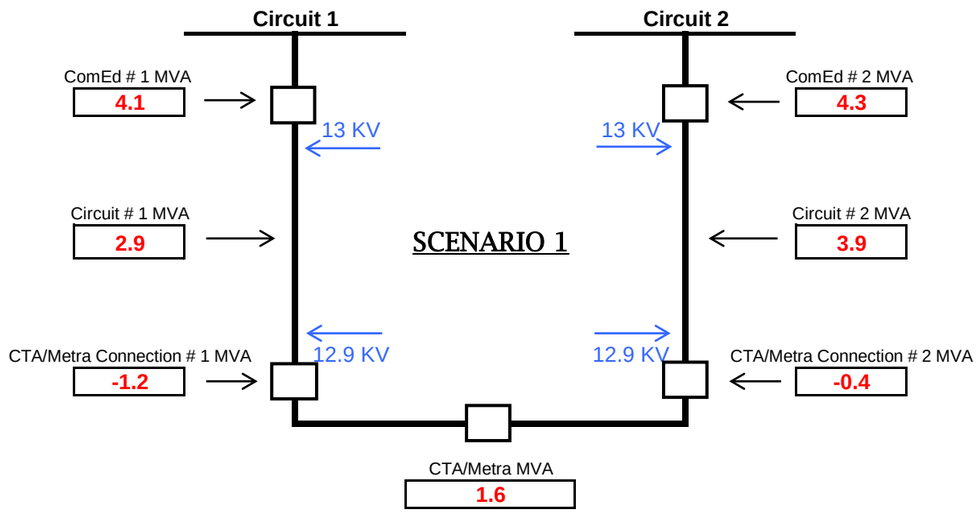

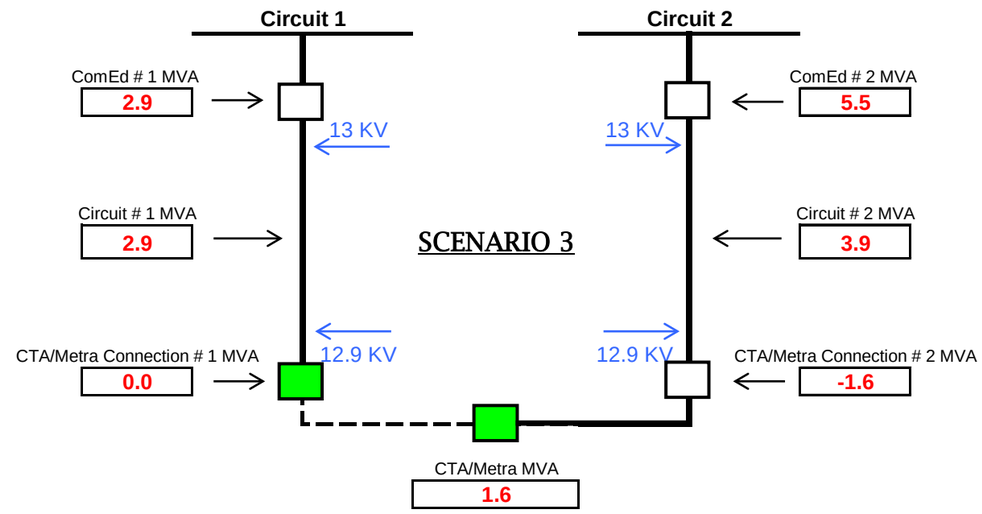

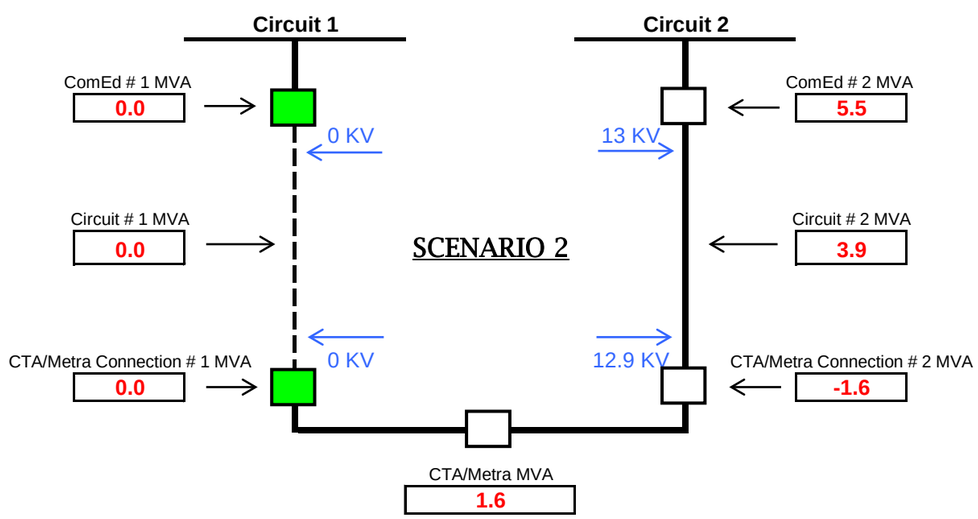

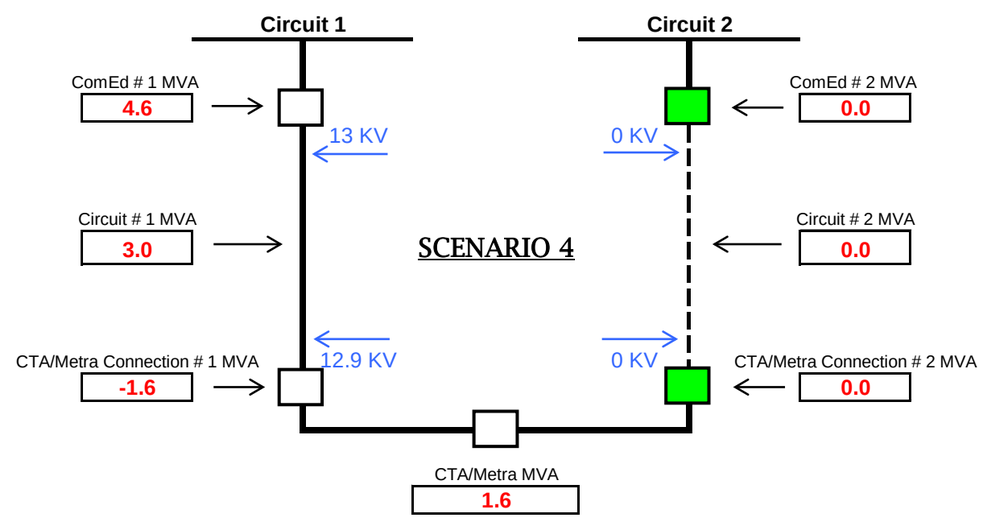

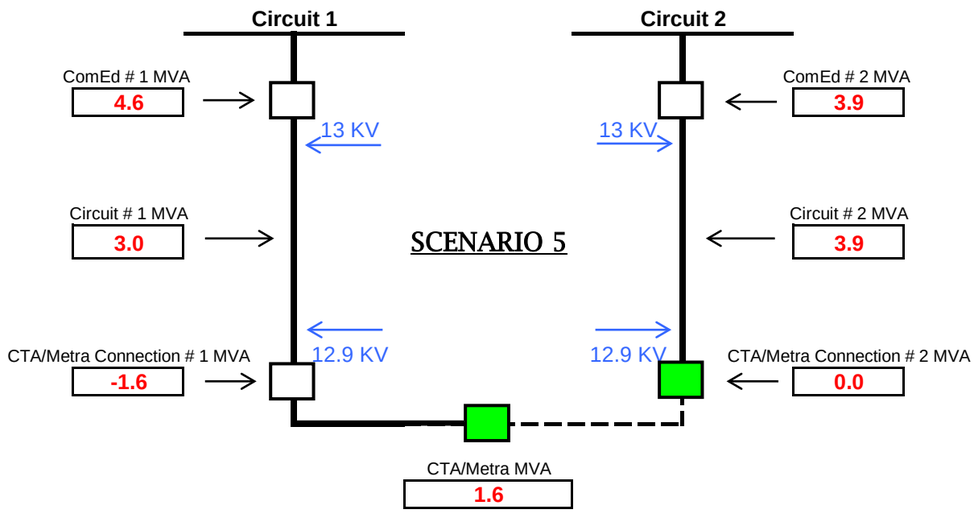
Circuit 1
Circuit 2
ComEd # 1 MVA
4.6
13 KV
13 KV
ComEd # 2 MVA
3.9
Circuit # 1 MVA
3.0
SCENARIO 5
Circuit # 2 MVA
3.9
CTA/Metra Connection # 1 MVA
-1.6
12.9 KV
12.9 KV
CTA/Metra Connection # 2 MVA
0.0
CTA/Metra MVA
1.6

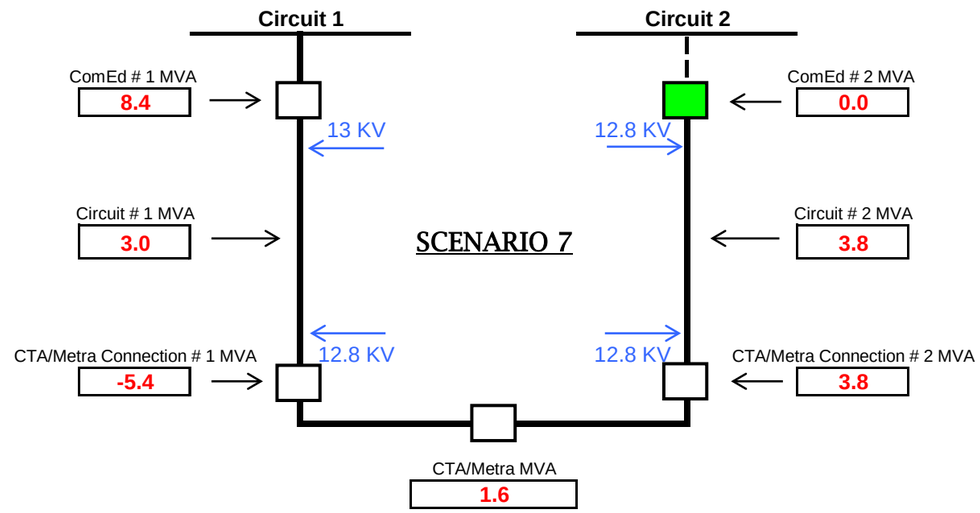
Circuit 1
Circuit 2
ComEd # 1 MVA
8.4
13 KV
12.8 KV
ComEd # 2 MVA
0.0
Circuit # 1 MVA
3.0
SCENARIO 7
Circuit # 2 MVA
3.8
CTA/Metra Connection # 1 MVA
-5.4
12.8 KV
12.8 KV
CTA/Metra Connection # 2 MVA
3.8
CTA/Metra MVA
1.6

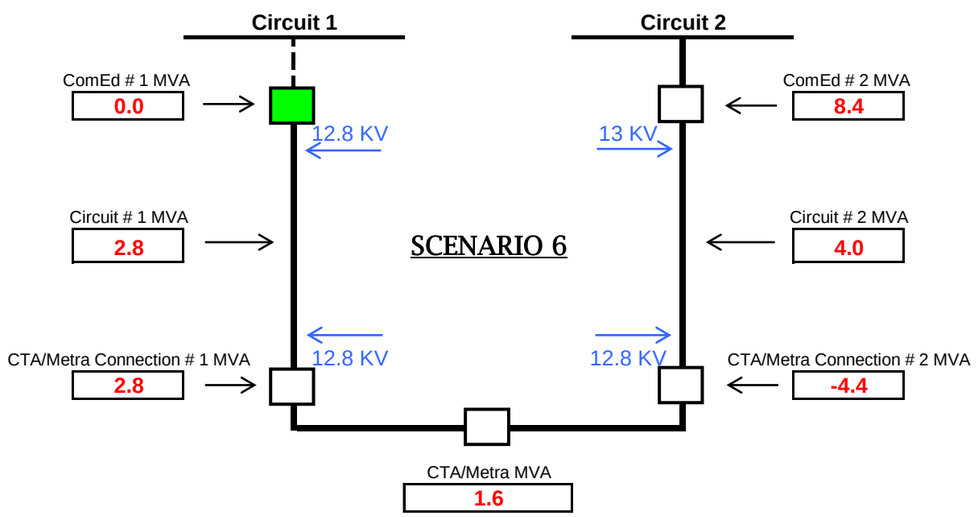
Circuit 1
Circuit 2
ComEd # 1 MVA
0.0
12.8 KV
13 KV
ComEd # 2 MVA
8.4
Circuit # 1 MVA
2.8
SCENARIO 6
Circuit # 2 MVA
4.0
CTA/Metra Connection # 1 MVA
2.8
12.8 KV
12.8 KV
CTA/Metra Connection # 2 MVA
-4.4
CTA/Metra MVA
1.6

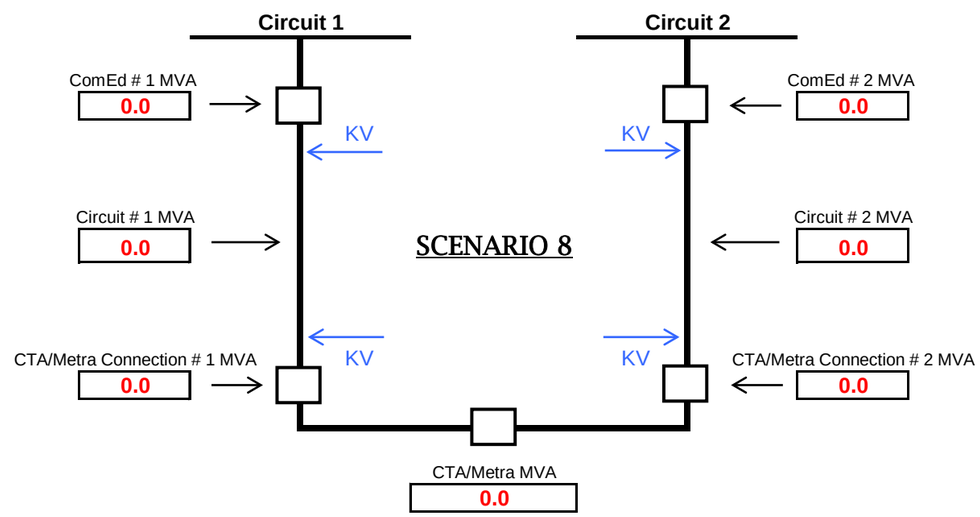
Circuit 1
Circuit 2
ComEd # 1 MVA
0.0
KV
KV
ComEd # 2 MVA
0.0
Circuit # 1 MVA
0.0
SCENARIO 8
Circuit # 2 MVA
0.0
CTA/Metra Connection # 1 MVA
0.0
KV
KV
CTA/Metra Connection # 2 MVA
0.0
CTA/Metra MVA
0.0

OO CYME Study Information

- [redacted], assumed load demand [redacted] at PF=[redacted] (From load information provided by Cedar).

- [redacted], assumed load demand [redacted] at PF=[redacted] (From load information provided by CIMS and Cedar).

- [redacted], assumed load demand [redacted] at PF=[redacted] (From load information provided by CIMS and Cedar).

- [redacted] APT load information used.
  - [redacted] APT selected load date: [redacted] APT actual load on [redacted]: [redacted] ➔ [redacted]
  - [redacted] APT WA on selected load date: [redacted]
  - [redacted] WA load: [redacted] ➔ [redacted]

- [redacted] APT load information used.
  - [redacted] APT selected load date: [redacted]
  - [redacted] APT actual load on [redacted]: [redacted] ➔ [redacted]
  - [redacted] APT WA on selected load date: [redacted]
  - [redacted] WA load: [redacted] ➔ [redacted]

- [redacted] load allocation method
  - Validate in the CYME model all transformers, ESS loads, including [redacted] or each feeding line at [redacted] per Cedar meter information.
  - Open bus tie breaker at CTA, (i.e., assumed zero point of the network). This allowed for proper load allocation on the feeders.
  - Power factor of [redacted]% for [redacted] and [redacted]% for [redacted] were used during allocation so as to obtain an adjusted load PF of [redacted]% on all feeders.
  - Ignore motors.
  - Open zero-point section and allocate the loads.
  - Close zero-point and run analysis.

- Physical midpoint kV on feeder [redacted] is taken at section 239771391 and the endpoint kV is taken at section 489538492.

- Physical midpoint kV on feeder [redacted] is taken at section 239771370 and the endpoint kV is taken at section 239770040.

OO - CYME Study Results

Scenario	@ CTA - Connection #1 (MVA)	@ CTA - Connection #2 (MVA)	@ ComEd - Circuit #1 (MVA)	@ ComEd - Circuit #2 (MVA)	@ CTA - Connection #1 (kV)	@ CTA - Connection #2 (kV)	@ ComEd - Circuit #1 (kV)	@ ComEd - Circuit #2 (kV)	@ ComEd - Circuit #1 Midpoint (kV)	@ ComEd - Circuit #2 Midpoint (kV)	@ ComEd - Circuit #1 Endpoint (kV)	@ ComEd - Circuit #2 Endpoint (kV)
1	-1.2	-0.4	4.1	4.3	12.9	12.9	13.0	13.0	12.9	12.9	12.9	12.9
2	0.0	-1.6	0.0	5.5	0.0	12.9	0.0	13.0	0.0	12.9	0.0	12.9
3	0.0	-1.6	2.9	5.5	12.9	12.9	13.0	13.0	12.9	12.9	12.9	12.9
4	-1.6	0.0	4.6	0.0	12.9	0.0	13.0	0.0	12.9	0.0	12.9	0.0
5	-1.6	0.0	4.6	3.9	12.9	12.9	13.0	13.0	12.9	12.9	12.9	12.9
6	2.8	-4.4	0.0	8.4	12.8	12.8	12.8	13.0	12.8	12.8	12.8	12.8
7	-5.4	3.8	8.4	0.0	12.8	12.8	13.0	12.8	12.8	12.8	12.8	12.7

Scenario:

Scenario 1: @ CTA/Metra connection #1 and #2 closed, @ ComEd circuit #1 and #2 closed. This represents the normal condition.

Scenario 2: @ CTA/Metra connection #1 open and #2 closed, @ ComEd circuit #1 open and #2 closed. This represents an outage of ComEd circuit #1.

Scenario 3: @ CTA/Metra connection #1 and bus tie open and #2 closed, @ ComEd circuit #1 and #2 closed. This represents an outage of CTA/Metra Bus #1.

Scenario 4: @ CTA/Metra connection #1 closed and #2 open, @ ComEd circuit #1 closed and #2 open. This represents an outage of ComEd circuit #2.

Scenario 5: @ CTA/Metra connection #1 closed and #2 and bus tie open, @ ComEd circuit #1 and #2 closed. This represents an outage of CTA/Metra Bus #2.

Scenario 6: @ CTA/Metra connection #1 and #2 closed, @ ComEd circuit #1 open and #2 closed. This represents loss of source for ComEd circuit #1.

Scenario 7: @ CTA/Metra connection #1 and #2 closed, @ ComEd circuit #1 closed and #2 open. This represents loss of source for ComEd circuit #2.

CONFIDENTIAL AND PROPRIETARY - CEII

DD SUBSTATION

OOO CTA CYME Study Results

Scenario	@ CTA Connection #1 (MVA)	@ CTA Connection #2 (MVA)	@SS Connection #1 (MVA)	@SS Connection #2 (MVA)	@SS Connection #3 (MVA)	@SS Connection #4 (MVA)	@ComEd Circuit #1 (MVA)	@ ComEd Circuit #2 (MVA)	@ ComEd Circuit #3 (MVA)	@ ComEd Circuit #4 (MVA)	@ CTA Connection #1 (kV)	@ CTA Connection #2 (kV)	@SS Connection #1 (kV)	@SS Connection #2 (kV)	@SS Connection #3 (kV)	@SS851 Connection #4 (kV)	@ ComEd Circuit #1 (kV)	@ ComEd Circuit #2 (kV)	@ ComEd Circuit #3 (kV)	@ ComEd Circuit #4 (kV)
1	-0.4	-0.3	1.2	-2.4	-1.4	-2.5	5.2	7.0	6.6	5.8	12.2	12.2	12.2	12.2	12.2	12.2	12.5	12.5	12.5	12.5
2	0.0	-0.7	1.6	-2.4	-1.6	-2.7	0.0	7.0	6.7	5.9	0.0	12.2	12.2	12.2	12.2	12.2	0.0	12.5	12.5	12.5
3	0.0	-0.7	1.6	-2.4	-1.6	-2.7	4.8	7.0	6.7	5.9	12.2	12.2	12.2	12.2	12.2	12.2	12.5	12.5	12.5	12.5
4	-0.7	0.0	0.0	-2.0	-1.1	-2.2	5.5	6.6	6.3	5.5	12.2	0.0	0.0	12.2	12.2	12.2	12.5	12.5	12.5	12.5
5	-0.7	0.0	0.9	-2.2	-1.4	-2.5	5.5	6.7	6.5	5.7	12.2	12.2	12.2	12.2	12.2	12.2	12.5	12.5	12.5	12.5
6	-1.1	0.4	0.5	0.0	-2.3	-3.3	5.9	0.0	7.5	6.6	12.2	12.2	12.2	0.0	12.2	12.2	12.5	0.0	12.5	12.5
7	-1.6	0.9	0.0	0.0	0.0	-5.1	6.2	4.6	5.2	8.5	12.2	12.2	12.2	12.3	12.3	12.1	12.5	12.5	12.5	12.5
8	-1.0	0.3	0.6	-2.8	0.0	-3.1	5.5	7.4	0.0	6.3	12.2	12.2	12.2	12.2	0.0	12.2	12.5	12.5	0.0	12.5
9	-1.2	0.5	0.4	-3.2	-2.4	0.0	5.8	7.9	7.6	0.0	12.2	12.2	12.2	12.2	12.2	0.0	12.5	12.5	12.5	0.0
10	-1.2	0.5	0.4	-3.2	-2.4	0.0	5.8	7.9	7.6	3.3	12.2	12.2	12.2	12.2	12.2	0.0	12.5	12.5	12.5	12.5
11	4.6	-5.3	6.2	-4.0	-3.1	-4.2	0.0	8.7	8.3	7.5	12.0	12.0	12.1	12.1	12.1	12.1	11.9	12.5	12.5	12.5
12	-2.3	1.6	-0.7	4.7	-4.0	-5.1	6.9	0.0	9.2	8.5	12.1	12.1	12.1	12.1	12.1	12.1	12.5	12.0	12.5	12.5
13	-2.1	1.4	-0.5	-4.7	5.1	-5.0	6.7	9.4	0.0	8.3	12.1	12.1	12.1	12.1	12.1	12.1	12.5	12.5	12.0	12.5
14	-2.0	1.3	-0.4	-4.4	-3.6	3.3	6.6	9.1	8.8	0.0	12.1	12.1	12.1	12.1	12.1	12.1	12.5	12.5	12.5	12.1

kV

OOO CTA Cyme Results Comparison

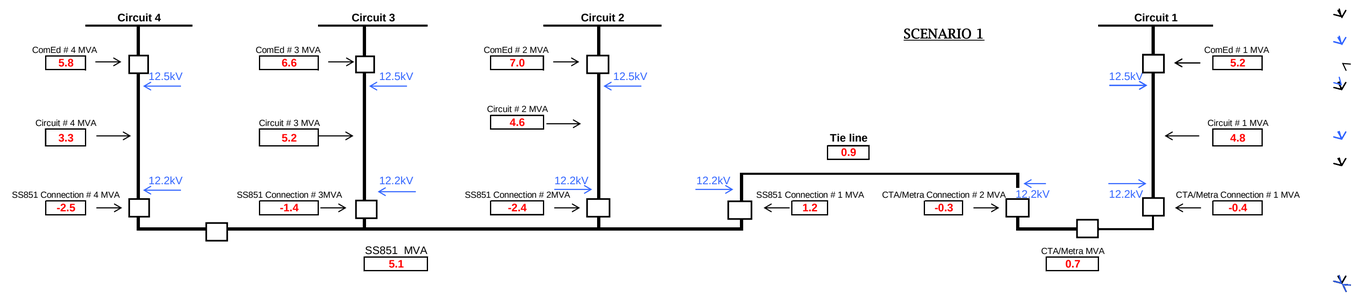

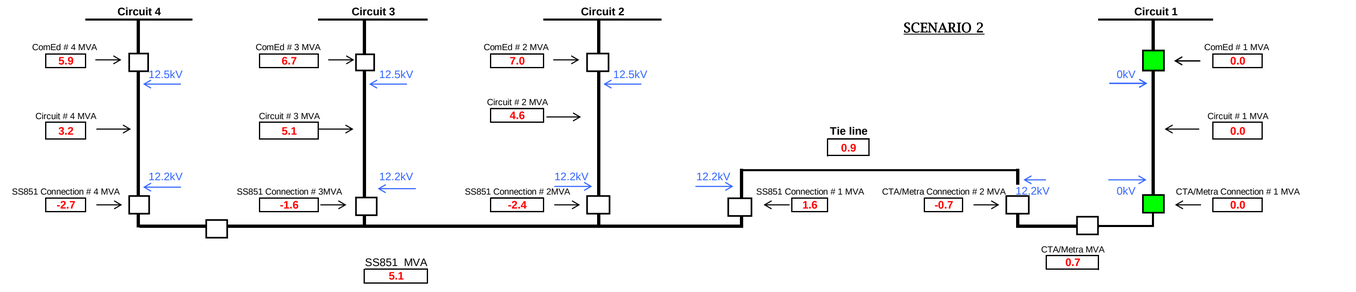

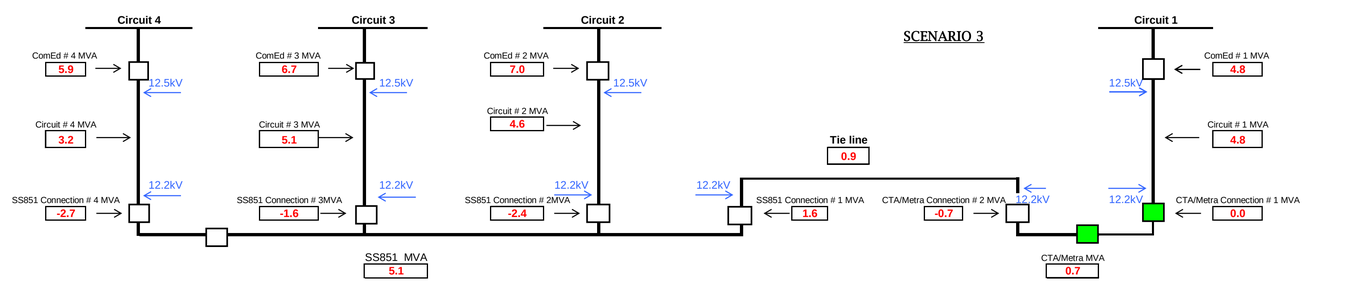

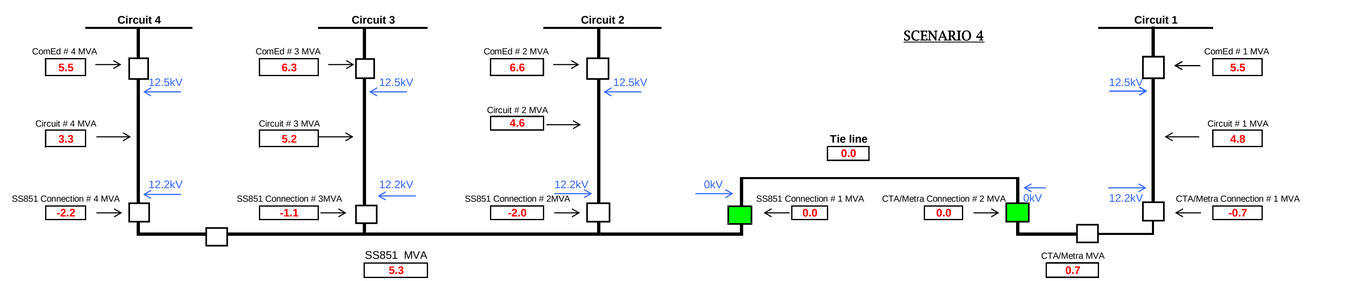

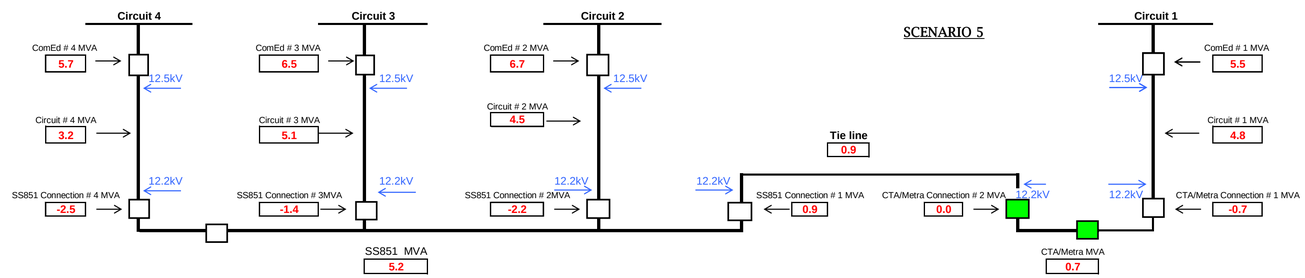
SCENARIO 5
Circuit 4
Circuit 3
Circuit 2
Circuit 1
ComEd # 4 MVA
5.7
12.5kV
Circuit # 4 MVA
3.2
12.2kV
SS851 Connection # 4 MVA
-2.5
ComEd # 3 MVA
6.5
12.5kV
Circuit # 3 MVA
5.1
12.2kV
SS851 Connection # 3MVA
-1.4
ComEd # 2 MVA
6.7
12.5kV
Circuit # 2 MVA
4.5
12.2kV
SS851 Connection # 2MVA
-2.2
Tie line
0.9
12.2kV
SS851 Connection # 1 MVA
0.9
CTA/Metra Connection # 2 MVA
0.0
12.2kV
SS851 MVA
5.2
CTA/Metra MVA
0.7
ComEd # 1 MVA
5.5
12.5kV
Circuit # 1 MVA
4.8
12.2kV
CTA/Metra Connection # 1 MVA
-0.7

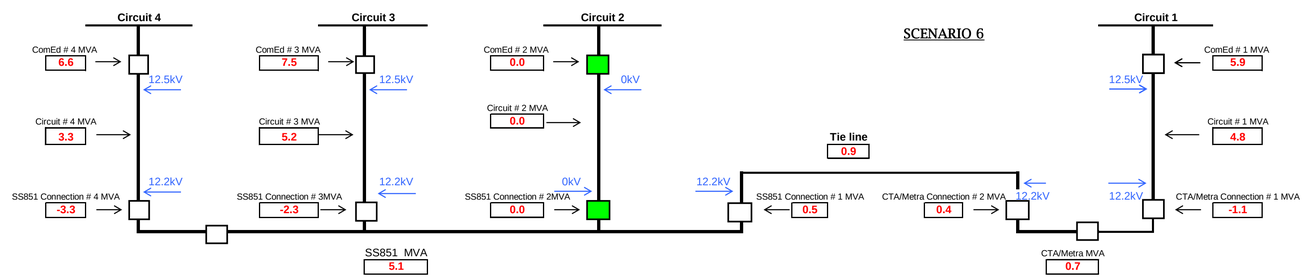
SCENARIO 6
Circuit 4
Circuit 3
Circuit 2
Circuit 1
ComEd # 4 MVA
6.6
12.5kV
Circuit # 4 MVA
3.3
12.2kV
SS851 Connection # 4 MVA
-3.3
ComEd # 3 MVA
7.5
12.5kV
Circuit # 3 MVA
5.2
12.2kV
SS851 Connection # 3MVA
-2.3
ComEd # 2 MVA
0.0
0kV
Circuit # 2 MVA
0.0
0kV
SS851 Connection # 2MVA
0.0
Tie line
0.9
12.2kV
SS851 Connection # 1 MVA
0.5
CTA/Metra Connection # 2 MVA
0.4
12.2kV
SS851 MVA
5.1
CTA/Metra MVA
0.7
ComEd # 1 MVA
5.9
12.5kV
Circuit # 1 MVA
4.8
12.2kV
CTA/Metra Connection # 1 MVA
-1.1

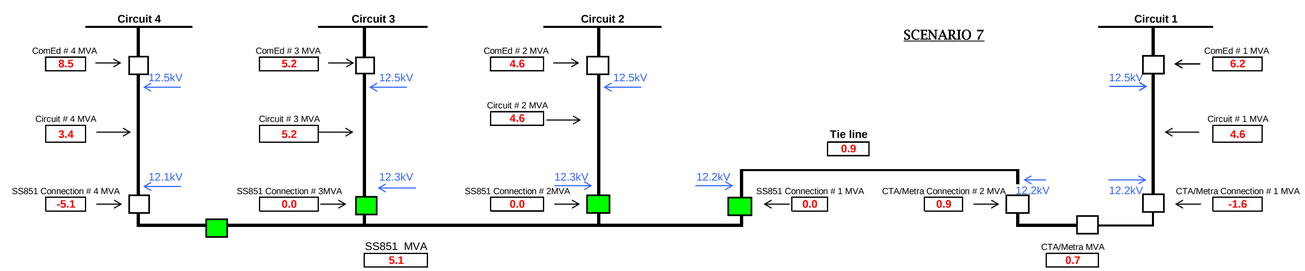
SCENARIO 7
Circuit 4
Circuit 3
Circuit 2
Circuit 1
ComEd # 4 MVA
8.5
12.5kV
Circuit # 4 MVA
3.4
12.1kV
SS851 Connection # 4 MVA
-5.1
ComEd # 3 MVA
5.2
12.5kV
Circuit # 3 MVA
5.2
12.3kV
SS851 Connection # 3MVA
0.0
ComEd # 2 MVA
4.6
12.5kV
Circuit # 2 MVA
4.6
12.3kV
SS851 Connection # 2MVA
0.0
Tie line
0.9
12.2kV
SS851 Connection # 1 MVA
0.0
CTA/Metra Connection # 2 MVA
0.9
12.2kV
SS851 MVA
5.1
CTA/Metra MVA
0.7
ComEd # 1 MVA
6.2
12.5kV
Circuit # 1 MVA
4.6
12.2kV
CTA/Metra Connection # 1 MVA
-1.6

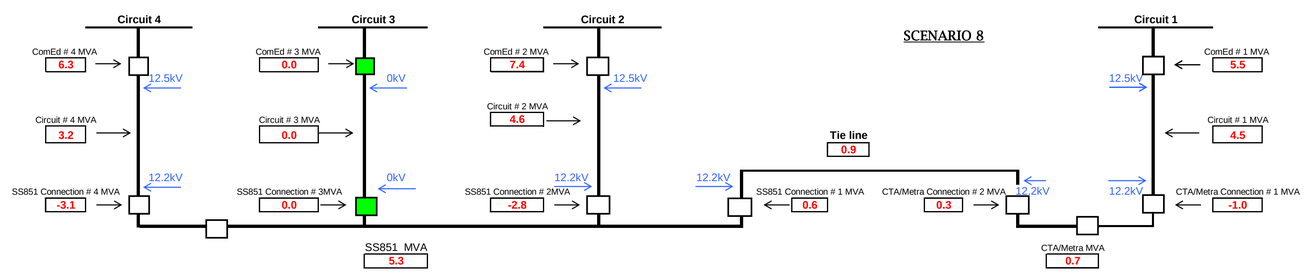
SCENARIO 8
Circuit 4
Circuit 3
Circuit 2
Circuit 1
ComEd # 4 MVA
6.3
12.5kV
Circuit # 4 MVA
3.2
12.2kV
SS851 Connection # 4 MVA
-3.1
ComEd # 3 MVA
0.0
0kV
Circuit # 3 MVA
0.0
0kV
SS851 Connection # 3MVA
0.0
ComEd # 2 MVA
7.4
12.5kV
Circuit # 2 MVA
4.6
12.2kV
SS851 Connection # 2MVA
-2.8
Tie line
0.9
12.2kV
SS851 Connection # 1 MVA
0.6
CTA/Metra Connection # 2 MVA
0.3
12.2kV
SS851 MVA
5.3
CTA/Metra MVA
0.7
ComEd # 1 MVA
5.5
12.5kV
Circuit # 1 MVA
4.5
12.2kV
CTA/Metra Connection # 1 MVA
-1.0

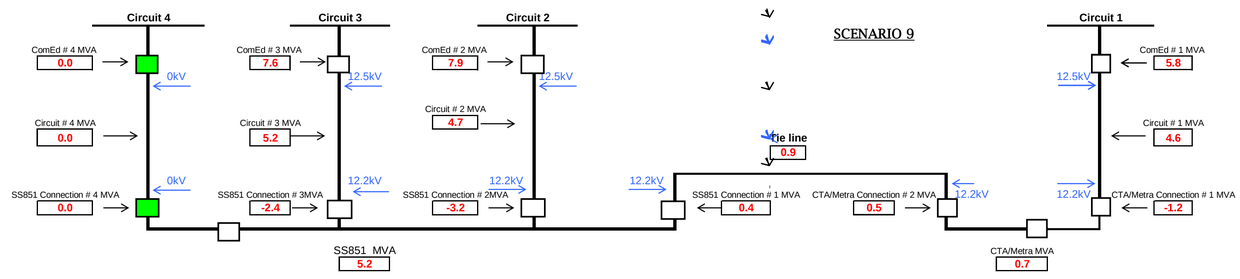
SCENARIO 9
Circuit 4
Circuit 3
Circuit 2
Circuit 1
ComEd # 4 MVA
0.0
0kV
Circuit # 4 MVA
0.0
0kV
SS851 Connection # 4 MVA
0.0
ComEd # 3 MVA
7.6
12.5kV
Circuit # 3 MVA
5.2
12.2kV
SS851 Connection # 3MVA
-2.4
ComEd # 2 MVA
7.9
12.5kV
Circuit # 2 MVA
4.7
12.2kV
SS851 Connection # 2MVA
-3.2
Tie line
0.9
12.2kV
SS851 Connection # 1 MVA
0.4
CTA/Metra Connection # 2 MVA
0.5
12.2kV
ComEd # 1 MVA
5.8
12.5kV
Circuit # 1 MVA
4.6
12.2kV
CTA/Metra Connection # 1 MVA
-1.2
SS851 MVA
5.2
CTA/Metra MVA
0.7

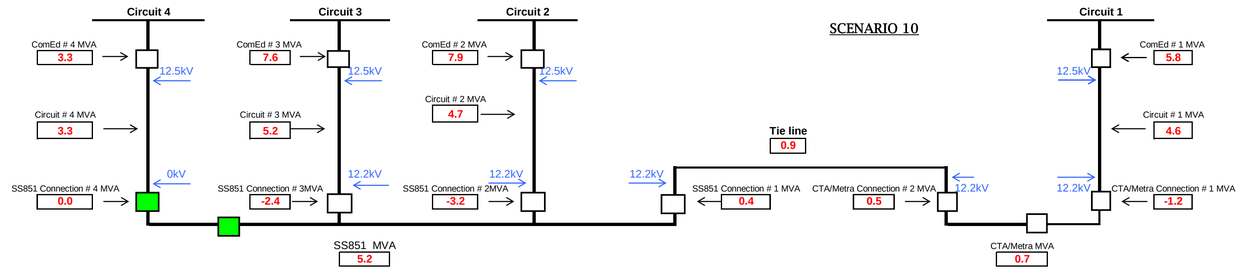
SCENARIO 10
Circuit 4
Circuit 3
Circuit 2
Circuit 1
ComEd # 4 MVA
3.3
12.5kV
Circuit # 4 MVA
3.3
0kV
SS851 Connection # 4 MVA
0.0
ComEd # 3 MVA
7.6
12.5kV
Circuit # 3 MVA
5.2
12.2kV
SS851 Connection # 3MVA
-2.4
ComEd # 2 MVA
7.9
12.5kV
Circuit # 2 MVA
4.7
12.2kV
SS851 Connection # 2MVA
-3.2
Tie line
0.9
12.2kV
SS851 Connection # 1 MVA
0.4
CTA/Metra Connection # 2 MVA
0.5
12.2kV
ComEd # 1 MVA
5.8
12.5kV
Circuit # 1 MVA
4.6
12.2kV
CTA/Metra Connection # 1 MVA
-1.2
SS851 MVA
5.2
CTA/Metra MVA
0.7

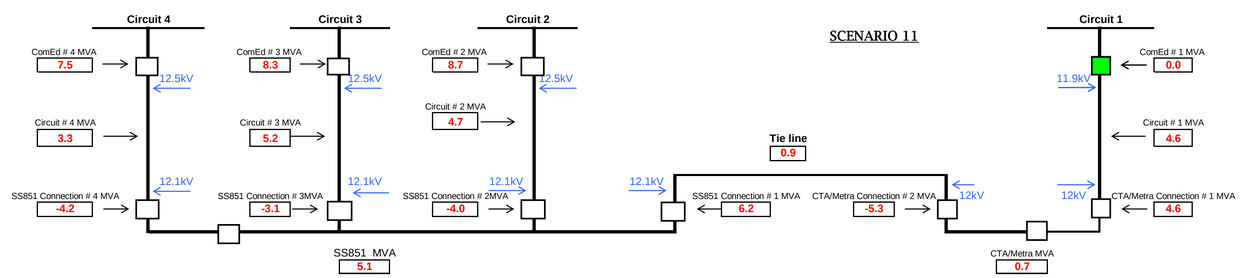
SCENARIO 11
Circuit 4
Circuit 3
Circuit 2
Circuit 1
ComEd # 4 MVA
7.5
12.5kV
Circuit # 4 MVA
3.3
12.1kV
SS851 Connection # 4 MVA
-4.2
ComEd # 3 MVA
8.3
12.5kV
Circuit # 3 MVA
5.2
12.1kV
SS851 Connection # 3MVA
-3.1
ComEd # 2 MVA
8.7
12.5kV
Circuit # 2 MVA
4.7
12.1kV
SS851 Connection # 2MVA
-4.0
Tie line
0.9
12.1kV
SS851 Connection # 1 MVA
6.2
CTA/Metra Connection # 2 MVA
-5.3
12kV
ComEd # 1 MVA
0.0
11.9kV
Circuit # 1 MVA
4.6
12kV
CTA/Metra Connection # 1 MVA
4.6
SS851 MVA
5.1
CTA/Metra MVA
0.7

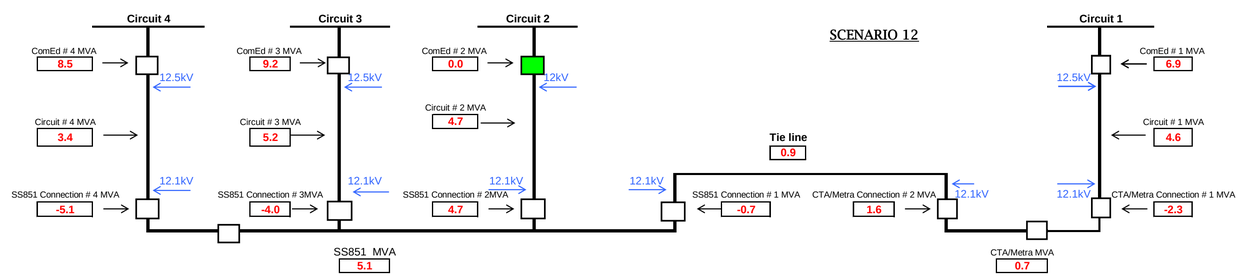
SCENARIO 12
Circuit 4
Circuit 3
Circuit 2
Circuit 1
ComEd # 4 MVA
8.5
12.5kV
Circuit # 4 MVA
3.4
12.1kV
SS851 Connection # 4 MVA
-5.1
ComEd # 3 MVA
9.2
12.5kV
Circuit # 3 MVA
5.2
12.1kV
SS851 Connection # 3MVA
-4.0
ComEd # 2 MVA
0.0
12kV
Circuit # 2 MVA
4.7
12.1kV
SS851 Connection # 2MVA
4.7
Tie line
0.9
12.1kV
SS851 Connection # 1 MVA
-0.7
CTA/Metra Connection # 2 MVA
1.6
12.1kV
ComEd # 1 MVA
6.9
12.5kV
Circuit # 1 MVA
4.6
12.1kV
CTA/Metra Connection # 1 MVA
-2.3
SS851 MVA
5.1
CTA/Metra MVA
0.7

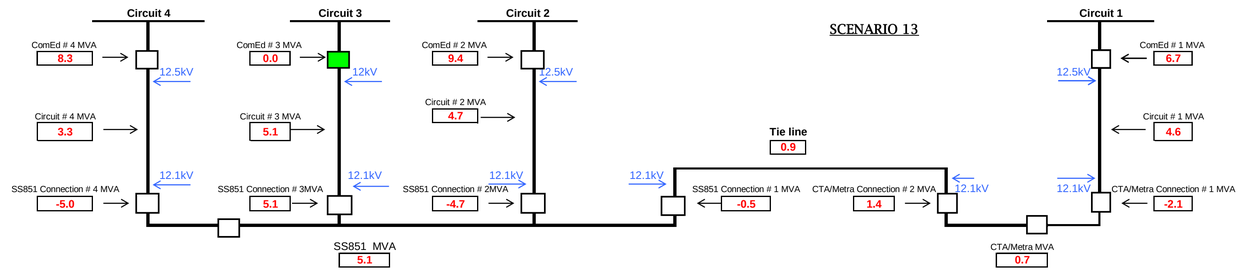
SCENARIO 13
Circuit 4
Circuit 3
Circuit 2
Circuit 1
ComEd # 4 MVA
8.3
12.5kV
Circuit # 4 MVA
3.3
12.1kV
SS851 Connection # 4 MVA
-5.0
ComEd # 3 MVA
0.0
12kV
Circuit # 3 MVA
5.1
12.1kV
SS851 Connection # 3MVA
5.1
ComEd # 2 MVA
9.4
12.5kV
Circuit # 2 MVA
4.7
12.1kV
SS851 Connection # 2MVA
-4.7
SS851 MVA
5.1
12.1kV
Tie line
0.9
SS851 Connection # 1 MVA
-0.5
CTA/Metra Connection # 2 MVA
1.4
12.1kV
CTA/Metra MVA
0.7
ComEd # 1 MVA
6.7
12.5kV
Circuit # 1 MVA
4.6
12.1kV
CTA/Metra Connection # 1 MVA
-2.1

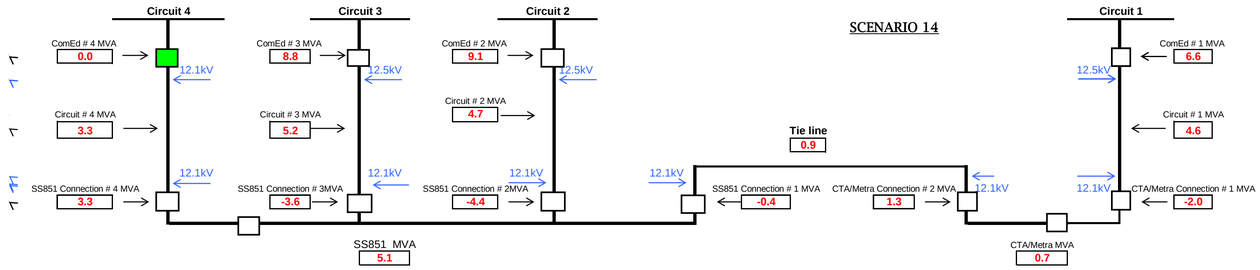
SCENARIO 14
Circuit 4
Circuit 3
Circuit 2
Circuit 1
ComEd # 4 MVA
0.0
12.1kV
Circuit # 4 MVA
3.3
12.1kV
SS851 Connection # 4 MVA
3.3
ComEd # 3 MVA
8.8
12.5kV
Circuit # 3 MVA
5.2
12.1kV
SS851 Connection # 3MVA
-3.6
ComEd # 2 MVA
9.1
12.5kV
Circuit # 2 MVA
4.7
12.1kV
SS851 Connection # 2MVA
-4.4
SS851 MVA
5.1
12.1kV
Tie line
0.9
SS851 Connection # 1 MVA
-0.4
CTA/Metra Connection # 2 MVA
1.3
12.1kV
CTA/Metra MVA
0.7
ComEd # 1 MVA
6.6
12.5kV
Circuit # 1 MVA
4.6
12.1kV
CTA/Metra Connection # 1 MVA
-2.0

OOO CTA CYME Study Information

- [redacted], [redacted], assumed load demand [redacted] at [redacted] for each line (From load information provided by Cedar).
- [redacted], [redacted], assumed load demand [redacted] at [redacted] (From load information provided by CIMS and Cedar).
- [redacted], [redacted], assumed load demand [redacted] at [redacted] (From load information provided by CIMS and Cedar).
- [redacted] APT load information used.
  - [redacted] APT selected load date: [redacted]
  - [redacted] APT actual load on [redacted]: [redacted]/[redacted]/[redacted] ➔ [redacted]
  - [redacted] APT WA on selected load date: [redacted]
  - [redacted] WA load: [redacted]/[redacted] ➔ [redacted]
- [redacted] APT load information used.
  - [redacted] APT selected load date: [redacted]
  - [redacted] APT actual load on [redacted]: [redacted]/[redacted]/[redacted] ➔ [redacted]
  - [redacted] APT WA on selected load date: [redacted]
  - [redacted] WA load: [redacted]/[redacted]/[redacted] ➔ [redacted]
- [redacted] APT load information used.
  - [redacted] APT selected load date [redacted]
  - [redacted] APT actual load on [redacted]: [redacted]/[redacted]/[redacted] ➔ [redacted]
  - [redacted] APT WA on selected load date [redacted]
  - [redacted] WA load: [redacted]/[redacted]/[redacted] ➔ [redacted]
- [redacted] APT load information used.
  - [redacted] APT selected load date: [redacted]
  - [redacted] APT actual load on [redacted]: [redacted]/[redacted]/[redacted] ➔ [redacted]
  - [redacted] APT WA on selected load date: [redacted]
  - [redacted] WA load: [redacted]/[redacted]/[redacted] ➔ [redacted]
- [redacted] APT load information used.
  - [redacted] APT selected load date: [redacted]
  - [redacted] APT actual load on [redacted]: [redacted]/[redacted]/[redacted] ➔ [redacted]
  - [redacted] APT WA on selected load date [redacted]
  - [redacted] WA load: [redacted]/[redacted]/[redacted] ➔ [redacted]
- [redacted] load allocation method
  - Validate in the CYME model all transformers, ESS loads, including [redacted] for each feeding line at [redacted] per Cedar meter information.

- Open [redacted] bus tie breaker (zero point #1) and section [redacted] (zero point #2) and section [redacted] (zero point #3). This allowed for proper load allocation on the feeders.

- Enter feeder loads: [redacted] for [redacted] (Avg. WA [redacted] minus the [redacted] supported from [redacted] and [redacted]), [redacted] for [redacted] (Avg. WA [redacted] minus [redacted] supported from [redacted]), [redacted] for [redacted] (Avg. WA [redacted] plus [redacted] contributed to [redacted], plus [redacted] contributed to [redacted]

- Power factor [redacted] for [redacted], [redacted], [redacted] for [redacted] and [redacted] for [redacted] were used during allocation so as to obtain an adjusted load PF of [redacted] – [redacted] on all feeders.

- Ignore motors.

- Open zero-point CTA bus tie breaker and allocate the loads.

- Close zero-point and run analysis.

- Physical midpoint kV on feeder [redacted] is taken at section [redacted] and the endpoint kV is taken at section [redacted]

- Physical midpoint kV on feeder [redacted] is taken at section [redacted] and the endpoint kV is taken at section [redacted]

- Physical midpoint kV on feeder [redacted] is taken at section [redacted] and the endpoint kV is taken at section [redacted].

- Physical midpoint kV on feeder [redacted] is taken at section [redacted] and the endpoint kV is taken at section [redacted].

PUBLIC

OOO CTA CYME Study Results

Scenario	@ CTA -Connection #1 (MVA)	@ CTA - Connection #2 (MVA)	@ SS -Connection #1 (MVA)	@ SS - Connection #2 (MVA)	@ SS -Connection #3 (MVA)	@ SS - Connection #4 (MVA)	@ ComEd – Circuit #1 (MVA)	@ ComEd - Circuit #2 (MVA)	@ ComEd - Circuit #3 (MVA)	@ ComEd - Circuit #4 (MVA)	@ CTA - Connection #1 (kV)	@ CTA - Connection #2 (kV)	@ SS - Connection #1 (kV)	@ SS - Connection #2 (kV)	@ SS - Connection #3 (kV)	@ SS – Connection #4 (kV)	@ ComEd - Circuit #1 (kV)	@ ComEd - Circuit #2 (kV)	@ ComEd - Circuit #3 (kV)	@ ComEd- Circuit #4 (kV)	@ ComEd - Circuit #1 Midpoint (kV)	@ ComEd - Circuit #1 Endpoint (kV)	@ ComEd - Circuit #2 Midpoint (kV)	@ ComEd - Circuit #2 Endpoint (kV)	@ ComEd - Circuit #3 Midpoint (kV)	@ ComEd - Circuit #3 Endpoint (kV)	@ ComEd - Circuit #4 Midpoint (kV)	@ ComEd - Circuit #4 Endpoint (kV)
1	-0.4	-0.3	1.2	-2.4	-1.4	-2.5	5.2	7.0	6.6	5.8	12.2	12.2	12.2	12.2	12.2	12.2	12.5	12.5	12.5	12.5	12.2	12.1	12.3	12.3	12.2	12.1	12.2	12.2
2	0	-0.7	1.6	-2.4	-1.6	-2.7	0	7.0	6.7	5.9	0	12.2	12.2	12.2	12.2	12.2	0	12.5	12.5	12.5	0	0	12.3	12.3	12.2	12.1	12.2	12.2
3	0	-0.7	1.6	-2.4	-1.6	-2.7	4.8	7.0	6.7	5.9	12.2	12.2	12.2	12.2	12.2	12.2	12.5	12.5	12.5	12.5	12.2	12.1	12.3	12.3	12.2	12.1	12.2	12.2
4	-0.7	0	0	-2.0	-1.1	-2.2	5.5	6.6	6.3	5.5	12.2	0	0	12.2	12.2	12.2	12.5	12.5	12.5	12.5	12.2	12.2	12.3	12.2	12.2	12.2	12.3	12.2
5	-0.7	0	0.9	-2.2	-1.4	-2.5	5.5	6.7	6.5	5.7	12.2	12.2	12.2	12.2	12.2	12.2	12.5	12.5	12.5	12.5	12.2	12.2	12.3	12.2	12.2	12.1	12.3	12.1
6	-1.1	0.4	0.5	0	-2.3	-3.3	5.9	0	7.5	6.6	12.2	12.2	12.2	0	12.2	12.2	12.5	0	12.5	12.5	12.2	12.1	0	0	12.1	12.0	12.2	12.2
7	-1.6	0.9	0	0	0	-5.1	6.2	4.6	5.2	8.5	12.2	12.2	12.2	12.3	12.3	12.1	12.5	12.5	12.5	12.5	12.2	12.1	12.4	12.4	12.2	12.1	12.1	12.1
8	-1.0	0.3	0.6	-2.8	0	-3.1	5.5	7.4	0	6.3	12.2	12.2	12.2	12.2	0	12.2	12.5	12.5	0	12.5	12.2	12.1	12.3	12.2	0	0	12.2	12.2
9	-1.2	0.5	0.4	-3.2	-2.4	0	5.8	7.9	7.6	0	12.2	12.2	12.2	12.2	12.2	0	12.5	12.5	12.5	0	12.2	12.1	12.2	12.2	12.2	12.0	0	0

PUBLIC

10	**-1.2**	**0.5**	**0.4**	**-3.2**	**-2.4**	**0**	**5.8**	**7.9**	**7.6**	**3.3**	**12.2**	**12.2**	**12.2**	**12.2**	**12.2**	**0**	**12.5**	**12.5**	**12.5**	**12.5**	**12.2**	**12.1**	**12.2**	**12.2**	**12.2**	**12.0**	**12.3**	**12.3**
11	**4.6**	**-5.3**	**6.2**	**-4.0**	**-3.1**	**-4.2**	**0**	**8.7**	**8.3**	**7.5**	**12.0**	**12.0**	**12.1**	**12.1**	**12.1**	**12.1**	**11.9**	**12.5**	**12.5**	**12.5**	**11.9**	**11.8**	**12.2**	**12.1**	**12.1**	**12.0**	**12.2**	**12.1**
12	**-2.3**	**1.6**	**-0.7**	**4.7**	**-4.0**	**-5.1**	**6.9**	**0**	**9.2**	**8.5**	**12.1**	**12.1**	**12.1**	**12.1**	**12.1**	**12.1**	**12.5**	**12.0**	**12.5**	**12.5**	**12.1**	**12.1**	**12.0**	**12.1**	**12.1**	**12.0**	**12.1**	**12.1**
13	**-2.1**	**1.4**	**-0.5**	**-4.7**	**5.1**	**-5.0**	**6.7**	**9.4**	**0**	**8.3**	**12.1**	**12.1**	**12.1**	**12.1**	**12.1**	**12.1**	**12.5**	**12.5**	**12.0**	**12.5**	**12.1**	**12.1**	**12.1**	**12.1**	**12.0**	**11.8**	**12.1**	**12.1**
14	**-2.0**	**1.3**	**-0.4**	**-4.4**	**-3.6**	**3.3**	**6.6**	**9.1**	**8.8**	**0**	**12.1**	**12.1**	**12.1**	**12.1**	**12.1**	**12.1**	**12.5**	**12.5**	**12.5**	**12.1**	**12.1**	**12.1**	**12.1**	**12.1**	**12.1**	**12.0**	**12.1**	**12.1**

Scenario:

Scenario 1: @ CTA/Metra connection #1 and #2 closed, @ ComEd circuit #1, #2, #3 and #4 closed, @ [redacted] connection #1, #2, #3, #4 and bus tie closed. This represents the normal condition.

Scenario 2: @ CTA/Metra connection #1 open and #2 closed, @ ComEd circuit #1 open and #2, #3 and #4 closed, @SS connection #1, #2, #3,#4 and bus tie closed. This represents an outage of ComEd circuit #1.

Scenario 3: @ CTA/Metra connection #1 and bus tie open and #2 closed, @ ComEd circuit #1, #2, #3 and #4 closed, @SS connection #1, #2, #3,#4 and bus tie closed. This represents an outage of CTA/Metra Bus #1.

Scenario 4: @ CTA/Metra connection #1 closed and #2 open, @ ComEd circuit #1, #2, #3 and #4 closed, @SS connection #1 open, #2, #3, #4 and bus tie closed. This represents an outage of ComEd tie line.

Scenario 5: @ CTA/Metra connection #1 closed and #2 and bus tie open, @ ComEd circuit #1,#2, #3 and #4 , @SS connection #1, #2, #3,#4 and bus tie closed. This represents an outage of CTA/Metra Bus #2.

Scenario 6: @ CTA/Metra connection #1 and #2 closed, @ ComEd circuit #1, #3 and #4 closed and #2 open, @SS connection #1, #3, #4 and bus tie closed, #2 open. This represents an outage of ComEd circuit #2.

Scenario 7: @ CTA/Metra connection #1 and #2 closed, @ ComEd circuit #1, #2, #3 and #4 closed, @SS connection #1, #2, #3 and bus tie open, #4 closed. This represents an outage of SS Bus #1.

Scenario 8: @ CTA/Metra connection #1 and #2 closed, @ ComEd circuit #1, #2 and #4 closed and #3 open, @SS connection #1, #2, #4 and bus tie closed, #3 open. This represents an outage of ComEd circuit #3.

Scenario 9: @ CTA/Metra connection #1 and #2 closed, @ ComEd circuit #1, #2 and #3 closed and #4 open, @SS connection #1,#2,#3 and bus tie closed, #4 open. This represents an outage of ComEd circuit #4.

Scenario 10: @ CTA/Metra connection #1 and #2 closed, @ ComEd circuit #1, #2, #3 and #4 closed, @SS connection #1,#2 and #3 closed, #4 and bus tie open. This represents an outage of SS Bus #2.

Scenario 11: @ CTA/Metra connection #1 and #2 closed, @ ComEd circuit #2, #3 and #4 closed and #1 open, @SS connection #1, #2, #3, #4 and bus tie closed. This represents loss of source for ComEd circuit #1.

Scenario 12: @ CTA/Metra connection #1 and #2 closed, @ ComEd circuit #1, #3 and #4 closed and #2 open, @SS connection #1, #2, #3, #4 and bus tie closed. This represents loss of source for ComEd circuit #2.

Scenario 13: @ CTA/Metra connection #1 and #2 closed, @ ComEd circuit #1, #2 and #4 closed and #3 open, @SS connection #1, #2, #3, #4 and bus tie closed. This represents loss of source for ComEd circuit #3.

Scenario 14: @ CTA/Metra connection #1 and #2 closed, @ ComEd circuit #1, #2 and #3 closed and #4 open, @SS connection #1, #2, #3, #4 and bus tie closed. This represents loss of source for ComEd circuit #4.

CONFIDENTIAL AND PROPRIETARY - CEII

□□□ SUBSTATION

P CYME Study Results

Scenario	@ CTA / Metra - Connection #1 (MVA)	@ CTA / Metra - Connection #2 (MVA)	@ ComEd - Circuit #1 (MVA)	@ ComEd - Circuit #2 (MVA)	@ CTA / Metra - Connection #1 (kV)	@ CTA / Metra - Connection #2 (kV)	@ ComEd - Circuit #1 (kV)	@ ComEd - Circuit #2 (kV)
1	-1.6	1.1	3.4	3.7	12.4	12.4	12.5	12.5
2	0.0	-0.5	0.0	5.2	0.0	12.3	0.0	12.5
3	0.0	-0.5	2.0	5.2	12.4	12.3	12.5	12.5
4	-0.8	0.3	2.8	0.0	12.4	12.4	12.5	0.0
5	-0.5	0.0	2.5	4.7	12.4	12.4	12.5	12.5
6	2.0	-2.5	0.0	7.2	12.2	12.2	12.1	12.4
7	-5.2	4.7	7.2	0.0	12.2	12.2	12.4	12.1
8	-0.8	0.3	2.8	4.4	12.4	12.4	12.5	12.5

P Cyme Results Comparison

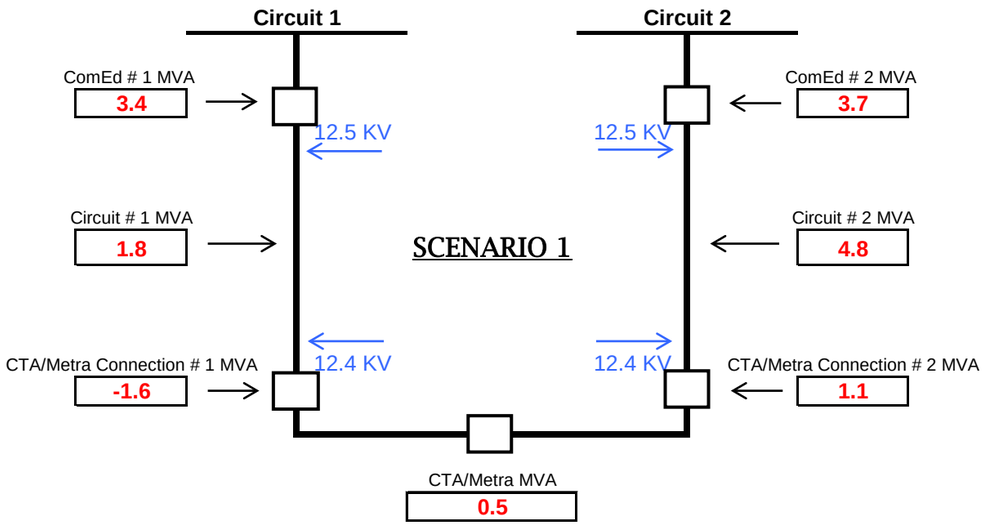

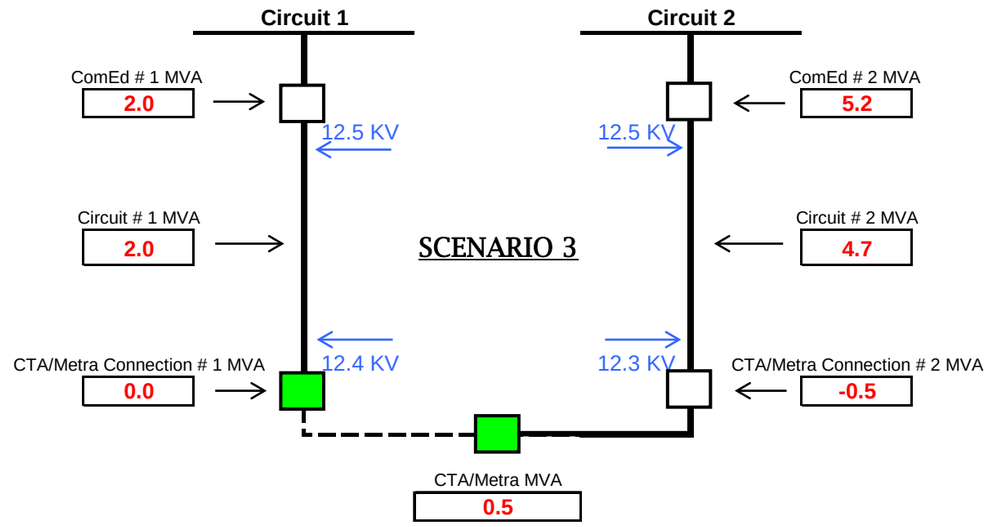

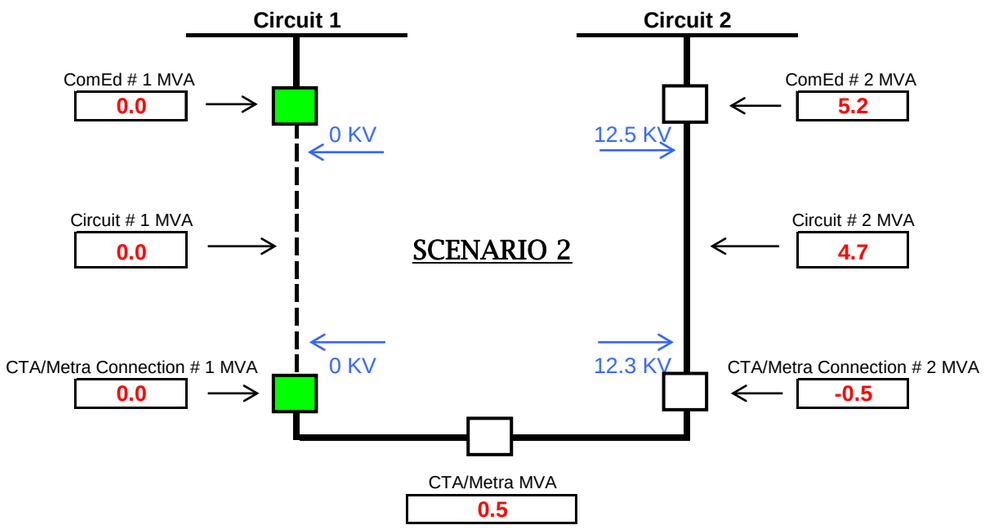

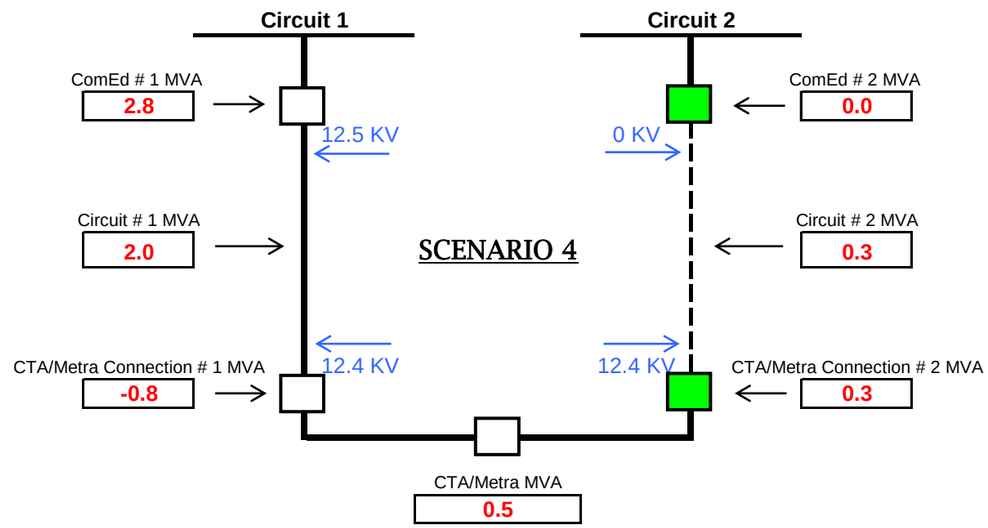

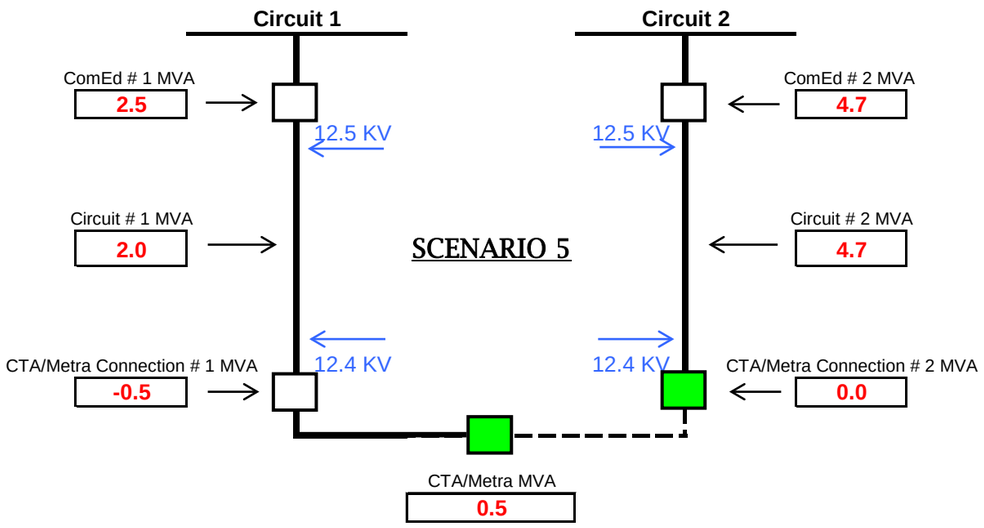
Circuit 1
Circuit 2
ComEd # 1 MVA
2.5
12.5 KV
12.5 KV
ComEd # 2 MVA
4.7
Circuit # 1 MVA
2.0
SCENARIO 5
Circuit # 2 MVA
4.7
CTA/Metra Connection # 1 MVA
-0.5
12.4 KV
12.4 KV
CTA/Metra Connection # 2 MVA
0.0
CTA/Metra MVA
0.5

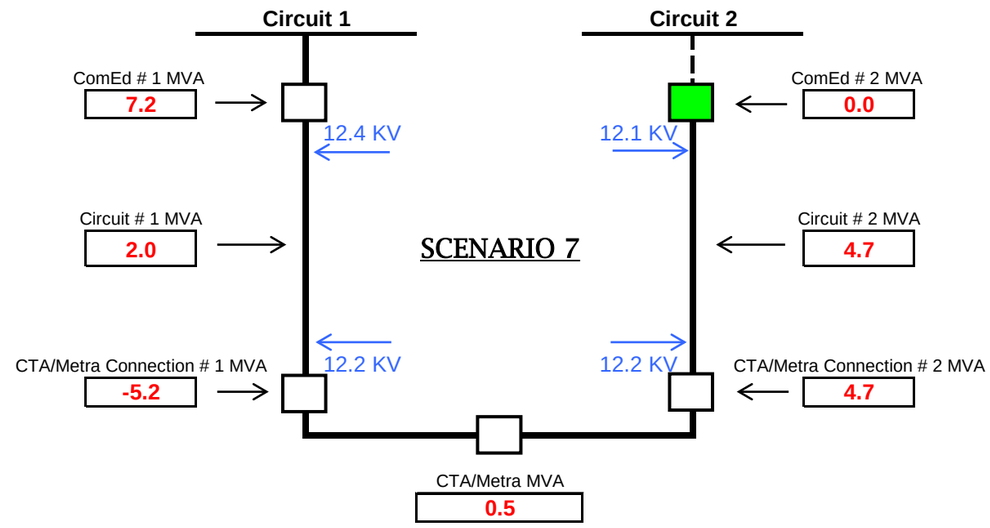
Circuit 1
Circuit 2
ComEd # 1 MVA
7.2
12.4 KV
12.1 KV
ComEd # 2 MVA
0.0
Circuit # 1 MVA
2.0
SCENARIO 7
Circuit # 2 MVA
4.7
CTA/Metra Connection # 1 MVA
-5.2
12.2 KV
12.2 KV
CTA/Metra Connection # 2 MVA
4.7
CTA/Metra MVA
0.5

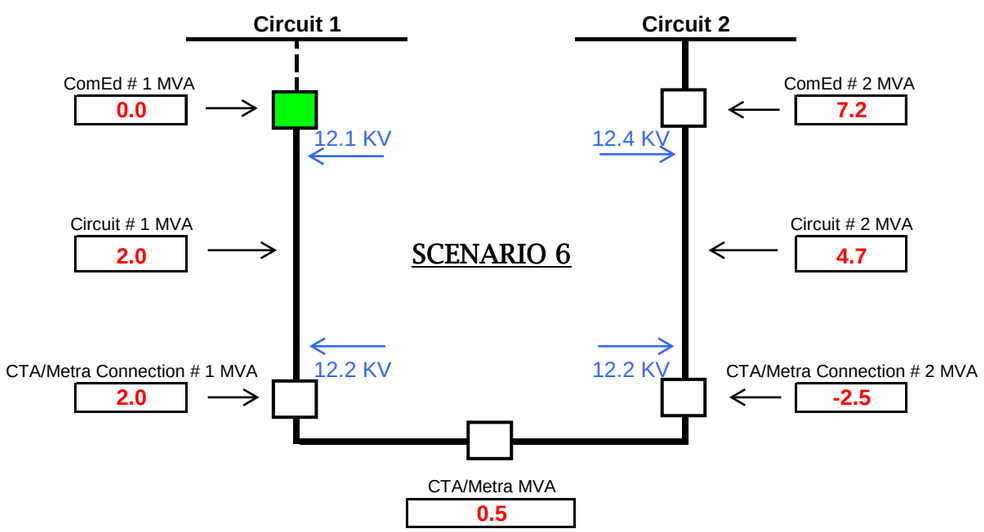
Circuit 1
Circuit 2
ComEd # 1 MVA
0.0
12.1 KV
12.4 KV
ComEd # 2 MVA
7.2
Circuit # 1 MVA
2.0
SCENARIO 6
Circuit # 2 MVA
4.7
CTA/Metra Connection # 1 MVA
2.0
12.2 KV
12.2 KV
CTA/Metra Connection # 2 MVA
-2.5
CTA/Metra MVA
0.5

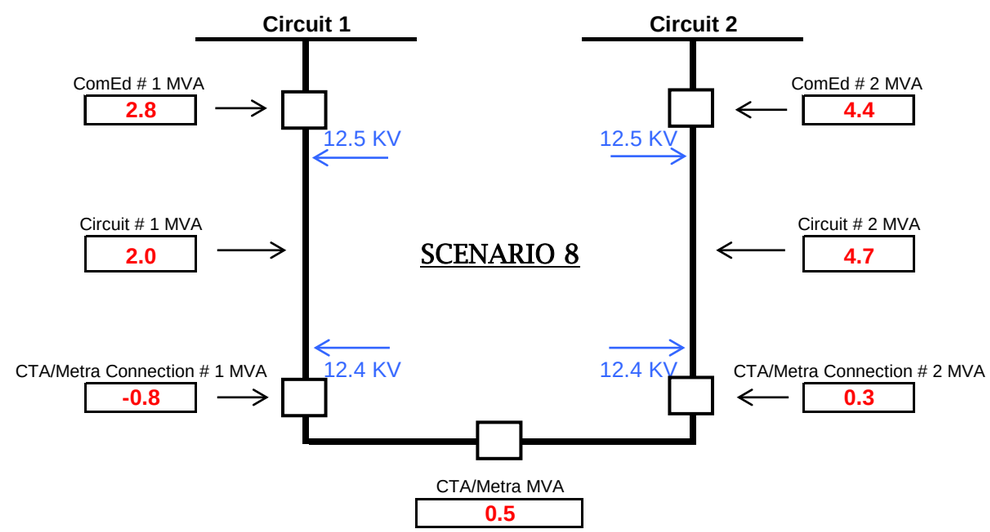
Circuit 1
Circuit 2
ComEd # 1 MVA
2.8
12.5 KV
12.5 KV
ComEd # 2 MVA
4.4
Circuit # 1 MVA
2.0
SCENARIO 8
Circuit # 2 MVA
4.7
CTA/Metra Connection # 1 MVA
-0.8
12.4 KV
12.4 KV
CTA/Metra Connection # 2 MVA
0.3
CTA/Metra MVA
0.5

P- CYME Study Information

- [redacted], used loads of [redacted] kw for each point of service..
- [redacted]substation load obtained from Cedar for [redacted] (KW with .[redacted]pf).
- [redacted] APT load information used.
  - [redacted] APT selected load date: [redacted]
  - [redacted] APT actual load on [redacted]: [redacted]A ➔ [redacted]A
  - [redacted]APT WA on selected load date: [redacted]
  - [redacted] WA load: [redacted]A ➔ [redacted]A
- [redacted] APT load information used.
  - [redacted] APT selected load date: [redacted]
  - [redacted] APT actual load on [redacted]: [redacted]A ➔ [redacted]A
  - [redacted] APT WA on selected load date: [redacted]
  - [redacted] WA load: [redacted]A ➔ [redacted]A
- [redacted]load allocation method
  - Open bus tie at [redacted] [redacted] ([redacted]) substation
  - Increased [redacted] by [redacted]A and reduced [redacted] by [redacted]A to compensate for flow at zero point.
  - Allocate [redacted]A with .[redacted]pf on [redacted].
  - Allocate [redacted]A with .[redacted]pf on [redacted]
  - Ignore motors.
  - Close bus tie at [redacted] substation and run analysis.
- Feeder [redacted] mid point is cable section #290736588 & end point is cta substation
- Feeder [redacted] mid point is cable section #290691607 & end point is on the ovhd at section #290474048

P-CYME Study Results

Scenario	@ CTA -Connection #1 (MVA)	@ CTA - Connection #2 (MVA)	@ ComEd - Circuit #1 (MVA)	@ ComEd - Circuit #2 (MVA)	@ CTA -Connection #1 (kV)	@ CTA - Connection #2 (kV)	@ ComEd - Circuit #1 (kV)	@ ComEd - Circuit #2 (kV)	@ ComEd - Circuit #1 Midpoint (kV)	@ ComEd - Circuit #2 Midpoint (kV)	@ ComEd - Circuit #1 Endpoint (kV)	@ ComEd - Circuit #2 Endpoint (kV)
1	-1.6	+1.1	+3.4	+3.7	12.4	12.4	12.5	12.5	12.4	12.4	12.4	12.4
2	0.0	-0.5	0.0	+5.2	0.0	12.3	0.0	12.5	0.0	12.4	0.0	12.3
3	0.0	-0.5	+2.0	+5.2	12.4	12.3	12.5	12.5	12.4	12.4	12.4	12.3
4	-0.8	+0.3	+2.8	0.0	12.4	12.4	12.5	0.0	12.4	0.0	12.4	0.0
5	-0.5	0.0	+2.5	+4.7	12.4	12.4	12.5	12.5	12.4	12.4	12.4	12.4
6	+2.0	-2.5	0.0	+7.2	12.2	12.2	12.1	12.4	12.1	12.3	12.2	12.2
7	-5.2	+4.7	+7.2	0.0	12.2	12.2	12.4	12.1	12.3	12.1	12.4	12.1
8	-0.8	+0.3	+2.8	+4.4	12.4	12.4	12.5	12.5	12.4	12.4	12.4	12.4

Scenario:

Scenario 1: @ CTA/Metra connection #1 and #2 closed, @ ComEd circuit #1 and #2 closed. This represents the normal condition.

Scenario 2: @ CTA/Metra connection #1 open and #2 closed, @ ComEd circuit #1 open and #2 closed. This represents an outage of ComEd circuit #1.

Scenario 3: @ CTA/Metra connection #1 and bus tie open and #2 closed, @ ComEd circuit #1 and #2 closed. This represents an outage of CTA/Metra Bus #1.

Scenario 4: @ CTA/Metra connection #1 closed and #2 **Closed**, @ ComEd circuit #1 closed and #2 open. **@[redacted] [redacted] [redacted]open** . This represents an outage of ComEd circuit #2.

Scenario 5: @ CTA/Metra connection #1 closed and #2 and bus tie open, @ ComEd circuit #1 and #2 closed. This represents an outage of CTA/Metra Bus #2.

Scenario 6: @ CTA/Metra connection #1 and #2 closed, @ ComEd circuit #1 open and #2 closed. This represents loss of source for ComEd circuit #1.

Scenario 7: @ CTA/Metra connection #1 and #2 closed, @ ComEd circuit #1 closed and #2 open. This represents loss of source for ComEd circuit #2.

Scenario 8: @ CTA/Metra connection #1 and #2 closed, @ ComEd circuit #1 closed and #2 Closed. @[redacted]closed and Circuit #2 open This represents loss of source for [redacted] from ComEd circuit #2.

CONFIDENTIAL AND PROPRIETARY - CEII

P - SUBSTATION

PP & TT CYME Study Results

Scenario	@ CTA Connection #1 (MVA)	@ CTA Connection #2 (MVA)	@ CTA Connection #3 (MVA)	@ CTA Connection #4 (MVA)	@ ComEd Circuit #1 (MVA))	@ ComEd Circuit #2 (MVA)	@ ComEd Circuit #3 (MVA)	@ CTA Connection #1 (kV)	@ CTA Connection #2 (kV)	@ CTA Connection #3 (kV)	@ CTA Connection #4 (kV)	@ ComEd Circuit #1 (kV)	@ ComEd Circuit #2 (kV)	@ ComEd Circuit #3 (kV)
1	-2.0	-0.8	0.5	-2.1	2.0	2.8	6.5	13.0	13.0	13.0	13.0	13.0	13.0	13.0
2	0.0	-2.7	0.6	-2.2	0.0	4.7	6.6	0.0	13.0	13.0	13.0	0.0	13.0	13.0
3	0.0	-2.7	0.6	-2.2	0.0	4.7	6.7	13.0	13.0	13.0	13.0	13.0	13.0	13.0
4	-2.7	0.0	0.5	-2.0	2.7	2.2	6.5	13.0	13.0	13.0	13.0	13.0	13.0	13.0
5	-2.7	0.0	0.0	-1.8	2.7	0.0	6.1	13.0	13.0	13.0	13.0	13.0	0.0	13.0
6	-2.1	-0.8	0.0	-1.8	2.1	3.0	6.1	13.0	13.0	13.0	13.0	13.0	13.0	13.0
7	-2.6	0.6	-1.8	0.0	2.7	4.2	4.5	13.0	13.0	12.9	12.9	13.0	13.0	13.0
8	-2.6	0.6	-1.8	0.0	2.6	4.3	0.0	13.0	13.0	12.9	12.9	13.0	13.0	0.0
9	0.0	-2.7	0.6	-2.2	0.0	4.7	6.6	13.0	13.0	13.0	13.0	13.0	13.0	13.0
10	-4.3	1.7	0.9	-2.6	4.4	0.0	7.0	13.0	13.0	12.9	12.9	13.0	13.0	13.0
11	-4.0	1.7	-6.1	4.4	4.0	7.3	0.0	13.0	13.0	12.9	12.9	13.0	13.0	12.8

PP & TT CYME Study Results

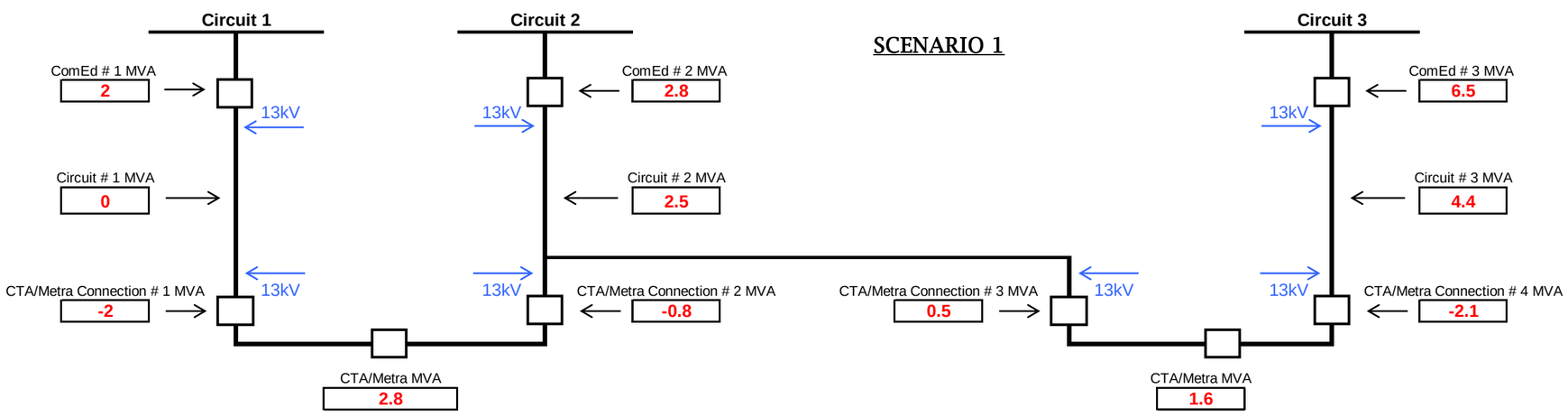

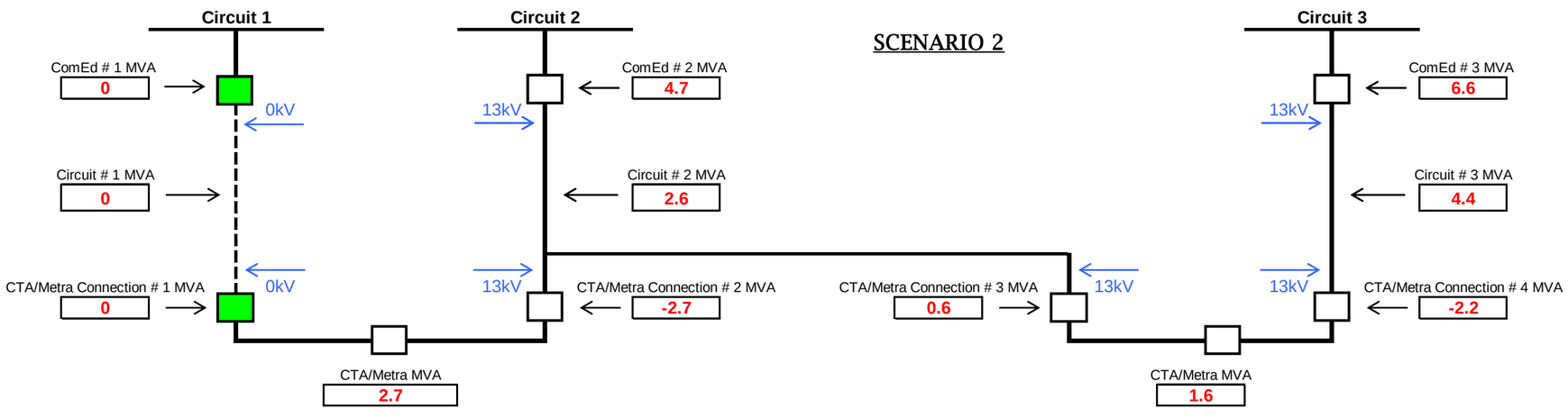

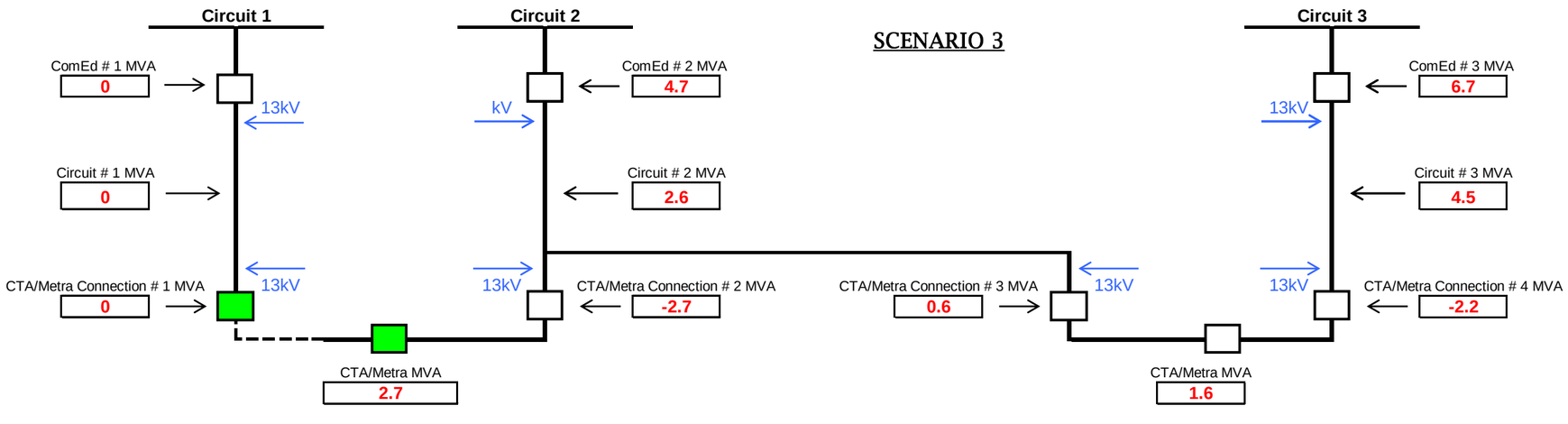

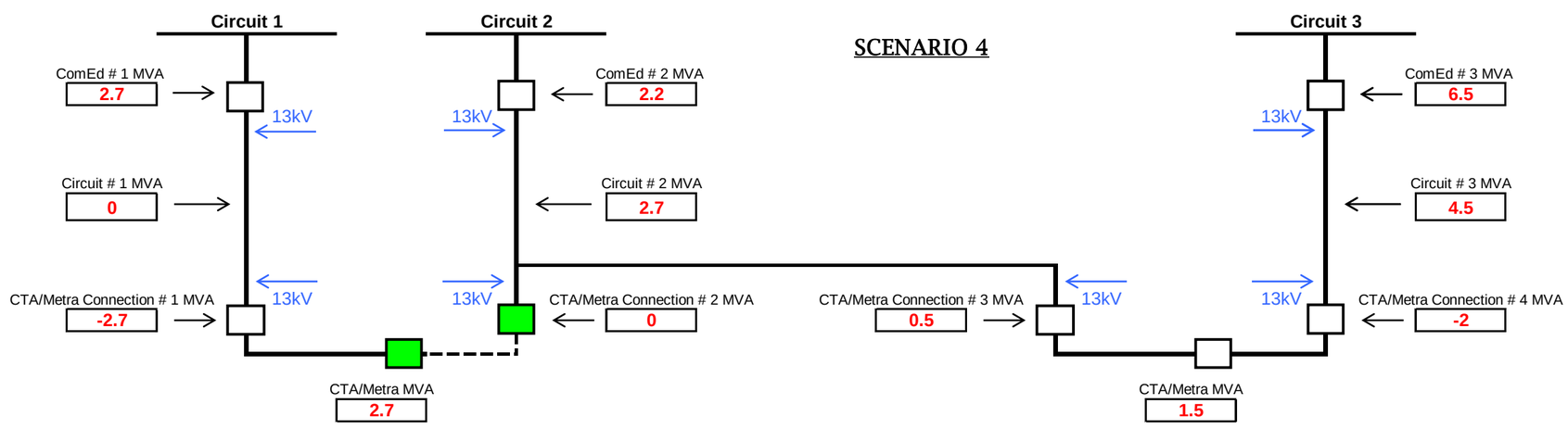
SCENARIO 4
Circuit 1
Circuit 2
Circuit 3
ComEd # 1 MVA
2.7
ComEd # 2 MVA
2.2
ComEd # 3 MVA
6.5
13kV
Circuit # 1 MVA
0
Circuit # 2 MVA
2.7
Circuit # 3 MVA
4.5
CTA/Metra Connection # 1 MVA
-2.7
CTA/Metra Connection # 2 MVA
0
CTA/Metra Connection # 3 MVA
0.5
CTA/Metra Connection # 4 MVA
-2
CTA/Metra MVA
2.7
CTA/Metra MVA
1.5

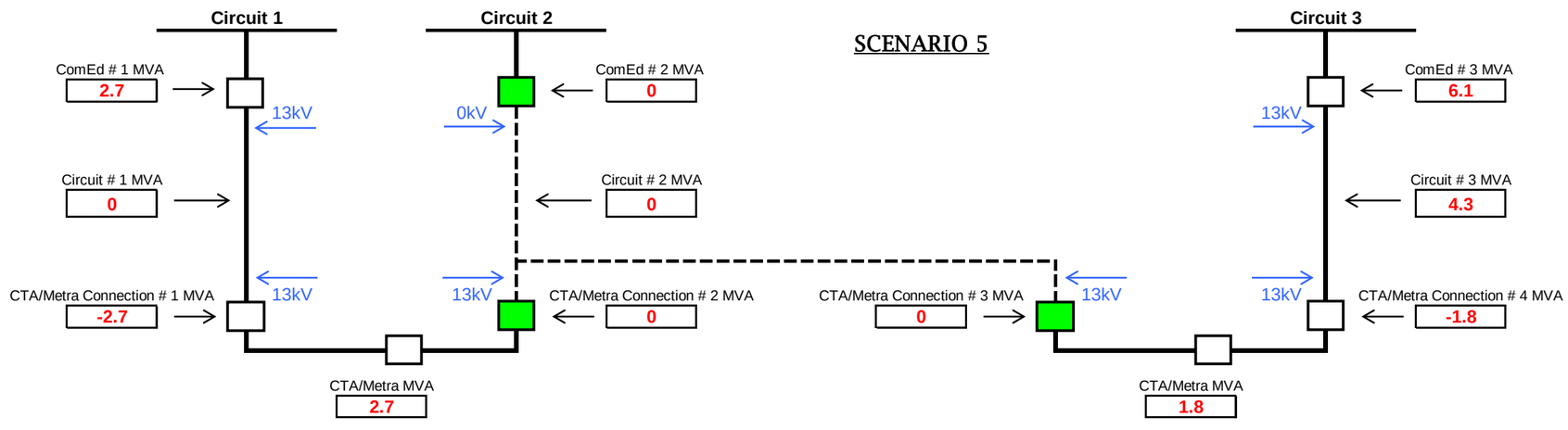
SCENARIO 5
Circuit 1
Circuit 2
Circuit 3
ComEd # 1 MVA
2.7
ComEd # 2 MVA
0
ComEd # 3 MVA
6.1
13kV
0kV
Circuit # 1 MVA
0
Circuit # 2 MVA
0
Circuit # 3 MVA
4.3
CTA/Metra Connection # 1 MVA
-2.7
CTA/Metra Connection # 2 MVA
0
CTA/Metra Connection # 3 MVA
0
CTA/Metra Connection # 4 MVA
-1.8
CTA/Metra MVA
2.7
CTA/Metra MVA
1.8

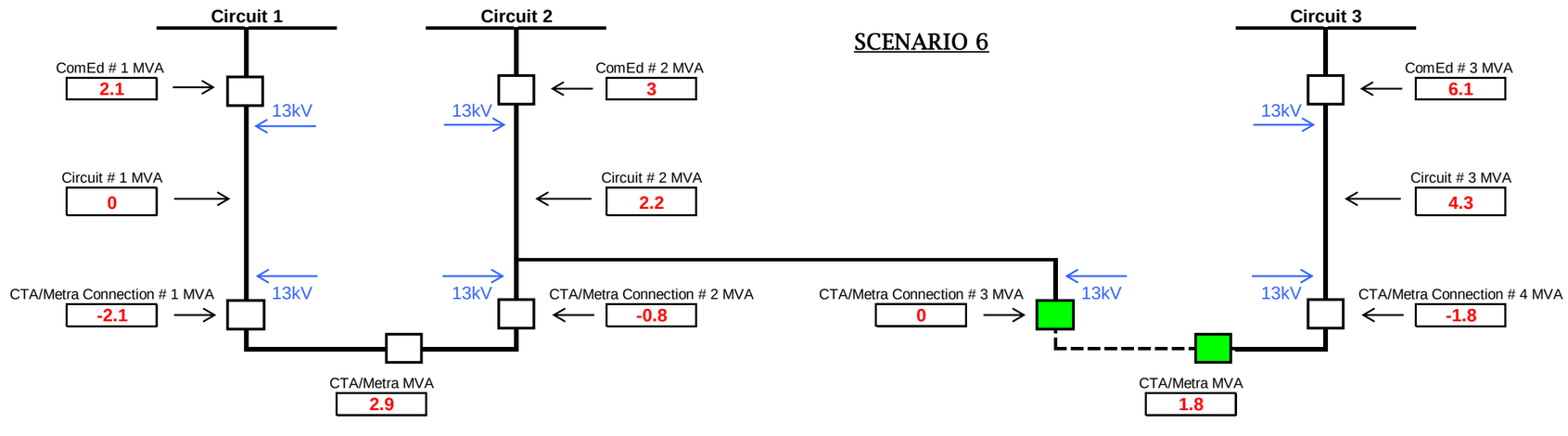
SCENARIO 6
Circuit 1
Circuit 2
Circuit 3
ComEd # 1 MVA
2.1
ComEd # 2 MVA
3
ComEd # 3 MVA
6.1
13kV
Circuit # 1 MVA
0
Circuit # 2 MVA
2.2
Circuit # 3 MVA
4.3
CTA/Metra Connection # 1 MVA
-2.1
CTA/Metra Connection # 2 MVA
-0.8
CTA/Metra Connection # 3 MVA
0
CTA/Metra Connection # 4 MVA
-1.8
CTA/Metra MVA
2.9
CTA/Metra MVA
1.8

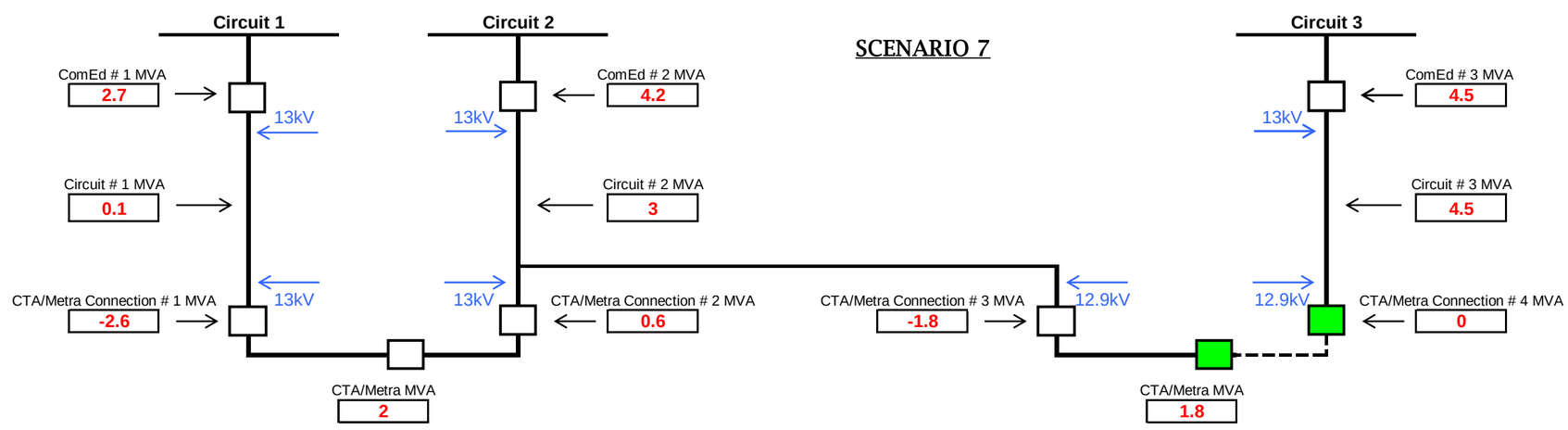
SCENARIO 7
Circuit 1
Circuit 2
Circuit 3
ComEd # 1 MVA
2.7
13kV
Circuit # 1 MVA
0.1
CTA/Metra Connection # 1 MVA
-2.6
13kV
CTA/Metra MVA
2
ComEd # 2 MVA
4.2
13kV
Circuit # 2 MVA
3
13kV
CTA/Metra Connection # 2 MVA
0.6
CTA/Metra Connection # 3 MVA
-1.8
12.9kV
CTA/Metra MVA
1.8
ComEd # 3 MVA
4.5
13kV
Circuit # 3 MVA
4.5
12.9kV
CTA/Metra Connection # 4 MVA
0

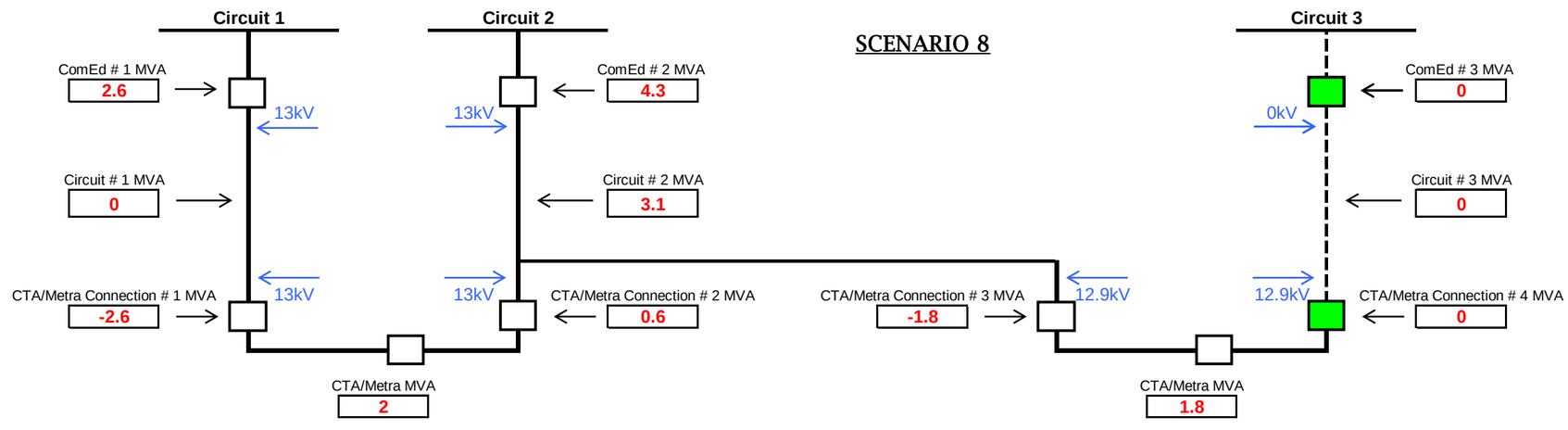
SCENARIO 8
Circuit 1
Circuit 2
Circuit 3
ComEd # 1 MVA
2.6
13kV
Circuit # 1 MVA
0
CTA/Metra Connection # 1 MVA
-2.6
13kV
CTA/Metra MVA
2
ComEd # 2 MVA
4.3
13kV
Circuit # 2 MVA
3.1
13kV
CTA/Metra Connection # 2 MVA
0.6
CTA/Metra Connection # 3 MVA
-1.8
12.9kV
CTA/Metra MVA
1.8
ComEd # 3 MVA
0
0kV
Circuit # 3 MVA
0
12.9kV
CTA/Metra Connection # 4 MVA
0

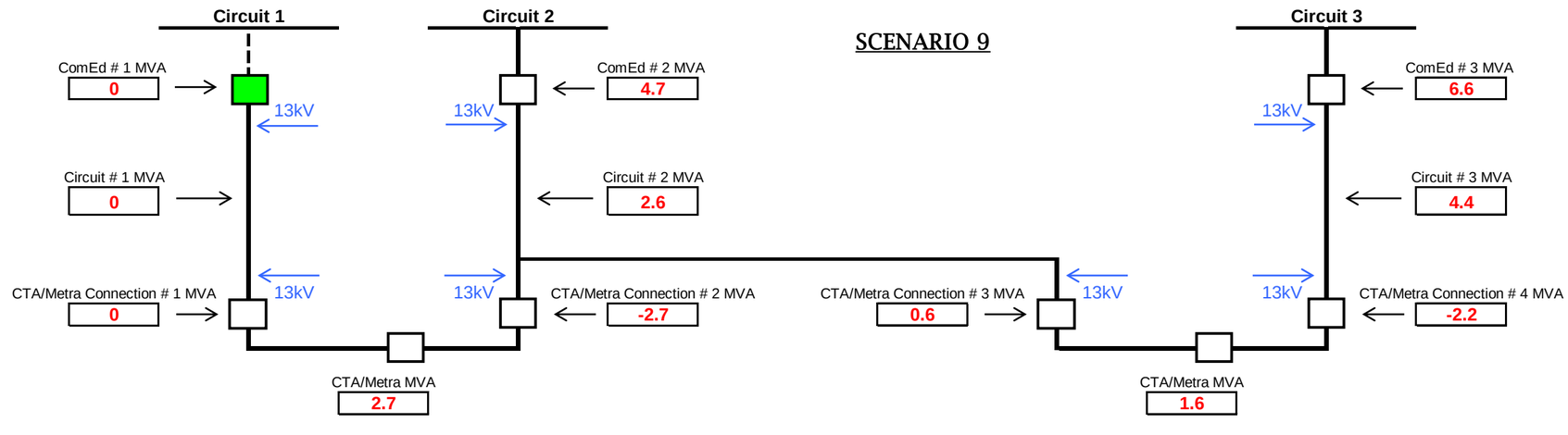
SCENARIO 9
Circuit 1
Circuit 2
Circuit 3
ComEd # 1 MVA
0
13kV
Circuit # 1 MVA
0
CTA/Metra Connection # 1 MVA
0
13kV
CTA/Metra MVA
2.7
ComEd # 2 MVA
4.7
13kV
Circuit # 2 MVA
2.6
13kV
CTA/Metra Connection # 2 MVA
-2.7
CTA/Metra Connection # 3 MVA
0.6
13kV
CTA/Metra MVA
1.6
ComEd # 3 MVA
6.6
13kV
Circuit # 3 MVA
4.4
13kV
CTA/Metra Connection # 4 MVA
-2.2

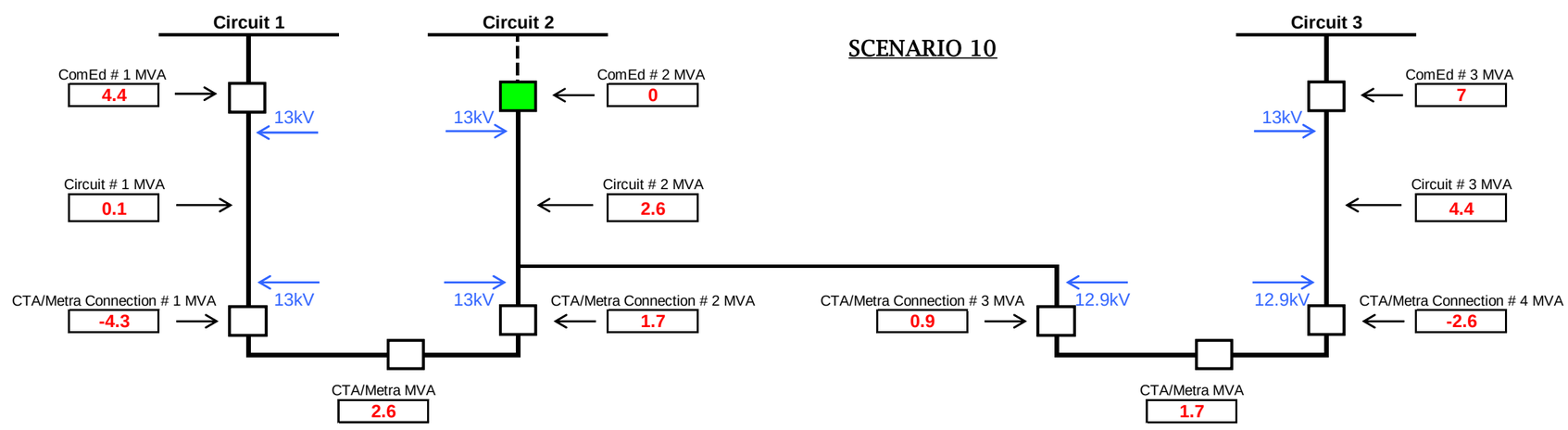
SCENARIO 10
Circuit 1
Circuit 2
Circuit 3
ComEd # 1 MVA
4.4
ComEd # 2 MVA
0
ComEd # 3 MVA
7
13kV
13kV
13kV
Circuit # 1 MVA
0.1
Circuit # 2 MVA
2.6
Circuit # 3 MVA
4.4
CTA/Metra Connection # 1 MVA
-4.3
13kV
13kV
CTA/Metra Connection # 2 MVA
1.7
CTA/Metra Connection # 3 MVA
0.9
12.9kV
12.9kV
CTA/Metra Connection # 4 MVA
-2.6
CTA/Metra MVA
2.6
CTA/Metra MVA
1.7

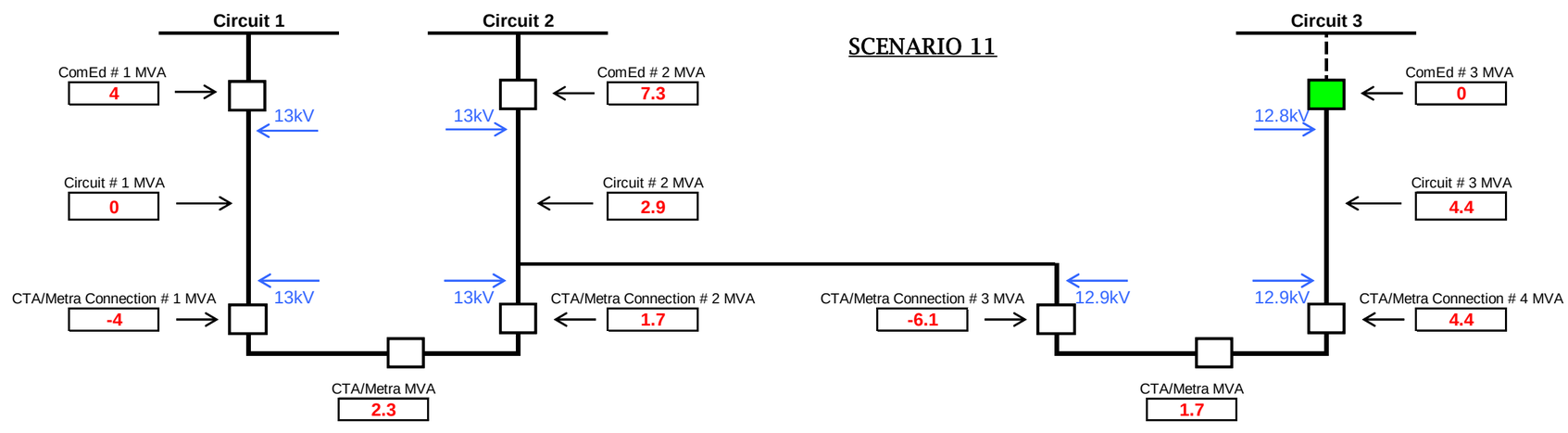
SCENARIO 11
Circuit 1
Circuit 2
Circuit 3
ComEd # 1 MVA
4
ComEd # 2 MVA
7.3
ComEd # 3 MVA
0
13kV
13kV
12.8kV
Circuit # 1 MVA
0
Circuit # 2 MVA
2.9
Circuit # 3 MVA
4.4
CTA/Metra Connection # 1 MVA
-4
13kV
13kV
CTA/Metra Connection # 2 MVA
1.7
CTA/Metra Connection # 3 MVA
-6.1
12.9kV
12.9kV
CTA/Metra Connection # 4 MVA
4.4
CTA/Metra MVA
2.3
CTA/Metra MVA
1.7

achieved by changing the source "Source type" to "User defined equivalent" and then altering the source impedance values in the "Equivalent" tab. This was done to make [redacted] a weaker source and [redacted] a stronger source.

- Under "Calculation Options" in the "Parameters" tab of the load flow analysis, "Include Source Impedance" was checked

- For the "Voltage Sensitivity Load Model" in the "Parameters" tab in the load flow analysis, the load model for each customer type was set to [redacted] constant power (and Q) and [redacted] constant impedance

- Close zero-points after allocation and run study

.

- Physical midpoint on feeder [redacted] is taken at CYMDIST section # 1030581295; and the endpoint is taken at CYMDIST section # 89247160.

- Physical midpoint on feeder [redacted] is taken at CYMDIST section # 89920341; and the endpoint is taken at CYMDIST section # 1076323777-8.

- Physical midpoint on feeder [redacted] is taken at CYMDIST section # 89920261; and the endpoint is taken at CYMDIST section # 89920458.

PP & TT CYME Study Results

Scenario	@ CTA Connection #1 (MVA)	@ CTA Connection #2 (MVA)	@ CTA Connection #3 (MVA)	@ CTA Connection #4 (MVA)	@ ComEd Circuit #1 (MVA)	@ ComEd Circuit #2 (MVA)	@ ComEd Circuit #3 (MVA)	@ CTA Connection #1 (kV)	@ CTA Connection #2 (kV)	@ CTA Connection #3 (kV)	@ CTA Connection #4 (kV)	@ ComEd Circuit #1 (kV)	@ ComEd Circuit #2 (kV)	@ ComEd Circuit #3 (kV)	@ ComEd - Circuit #1 Midpoint	@ ComEd - Circuit #2 Midpoint (kV) D5773	@ ComEd - Circuit #3 Midpoint	@ ComEd - Circuit #1 Endpoint	@ ComEd - Circuit #2 Endpoint	@ ComEd - Circuit #3 Endpoint
1	-2	-0.8	0.5	-2.1	2	2.8	6.5	13.0	13.0	13.0	13.0	13.0	13.0	13.0	13.0	13.0	13.0	13.0	12.9	13.0
2	0	-2.7	0.6	-2.2	0	4.7	6.6	0.0	13.0	13.0	13.0	0.0	13.0	13.0	0.0	13.0	13.0	0.0	12.9	13.0
3	0	-2.7	0.6	-2.2	0	4.7	6.7	13.0	13.0	13.0	13.0	13.0	13.0	13.0	13.0	13.0	13.0	13.0	12.9	13.0
4	-2.7	0	0.5	-2	2.7	2.2	6.5	13.0	13.0	13.0	13.0	13.0	13.0	13.0	13.0	13.0	13.0	13.0	12.9	13.0
5	-2.7	0	0	-1.8	2.7	0	6.1	13.0	13.0	13.0	13.0	13.0	0	13.0	13.0	0	13.0	13.0	0	13.0
6	-2.1	-0.8	0	-1.8	2.1	3	6.1	13.0	13.0	13.0	13.0	13.0	13.0	13.0	13.0	13.0	13.0	13.0	12.9	13.0
7	-2.6	0.6	-1.8	0	2.7	4.2	4.5	13.0	13.0	12.9	12.9	13.0	13.0	13.0	13.0	12.9	13.0	13.0	12.9	13.0
8	-2.6	0.6	-1.8	0	2.6	4.3	0	13.0	13.0	12.9	12.9	13.0	13.0	0	13.0	12.9	0	13.0	12.9	0
9	0	-2.7	0.6	-2.2	0	4.7	6.6	13.0	13.0	13.0	13.0	13.0	13.0	13.0	13.0	13.0	13.0	13.0	12.9	13.0
10	-4.3	1.7	0.9	-2.6	4.4	0	7	13.0	13.0	12.9	12.9	13.0	13.0	13.0	13.0	13.0	13.0	13.0	12.9	13.0
11	-4	1.7	-6.1	4.4	4	7.3	0	13.0	13.0	12.9	12.9	13.0	13.0	12.8	13.0	12.9	12.8	13.0	12.8	12.8

Scenario:

Scenario 1: @ CTA connection #1, #2, #3, and #4 closed, @ ComEd circuit #1, #2, and#3 closed. This represents the normal condition.

Scenario 2: @ CTA connection #1 open and #2, #3 and #4 closed, @ ComEd circuit #1 open and #2 and #3 closed. This represents an outage of ComEd circuit #1.

Scenario 3: @ CTA connection #1 and bus tie open and #2, #3, and #4 closed, @ ComEd circuit #1, #2, and #3 closed. This represents an outage of CTA Bus #1.

Scenario 4: @ CTA connection #2 and bus tie open and #1, #3, and #4, closed, @ ComEd circuit #1, #2, and #3 closed. This represents an outage of CTA Bus #2.

Scenario 5: @ CTA connection #2 and #3 open and #1 and #4 closed, @ ComEd circuit #2 open and #1 and #3 closed. This represents an outage of ComEd circuit #2.

Scenario 6: @ CTA connection #3 and bus tie open and #1, #2, and #4 closed, @ ComEd circuit #1, #2, and #3 closed. This represents an outage of CTA Bus #3.

Scenario 7: @ CTA connection #4 and bus tie open and #1, #2, and #3, closed, @ ComEd circuit #1, #2, and #3 closed. This represents an outage of CTA Bus #4.

Scenario 8: @ CTA connection #4 open and #1, #2, and #3 closed, @ ComEd circuit #3 open and #1 and #2 closed. This represents an outage of ComEd circuit #3.

Scenario 9: @ CTA connection #1, #2, #3, and #4, closed, @ ComEd circuit #1 open and #2 and #3 closed. This represents loss of source for ComEd circuit #1.

Scenario 10: @ CTA connection #1, #2, #3, and #4 closed, @ ComEd circuit #2 open and #1 and #3 closed. This represents loss of source for ComEd circuit #2.

Scenario 11: @ CTA connection #1, #2, #3, and #4 closed, @ ComEd circuit #3 open and #1 and #2 closed. This represents loss of source for ComEd circuit #3.

CONFIDENTIAL AND PROPRIETARY - CEII

PP & TT SUBSTATIONS

PPP CTA- CYME Study Results

Scenario	@ CTA / Metra -Connection #1 (MVA)	@ CTA / Metra - Connection #2 (MVA)	@ ComEd - Circuit #1 (MVA)	@ ComEd - Circuit #2 (MVA)	@ CTA / Metra - Connection #1 (kV)	@ CTA / Metra - Connection #2 (kV)	@ ComEd - Circuit #1 (kV)	@ ComEd - Circuit #2 (kV)
1	0.8	-2.0	4.5	5.5	12.9	12.9	13.0	13.0
2	0.0	-1.2	0.0	4.7	0.0	13.0	0.0	13.0
3	0.0	-1.2	5.2	4.7	13.0	13.0	13.0	13.0
4	-1.2	0.0	6.4	0.0	12.9	0.0	13.0	0.0
5	-1.2	0.0	6.4	3.5	12.9	12.9	13.0	13.0
6	5.2	-6.4	0.0	9.9	12.9	12.9	12.9	13.0
7	-4.6	3.4	9.9	0.0	12.9	12.9	13.0	12.8
8								

KV

PPP CTA Cyme Results Comparison

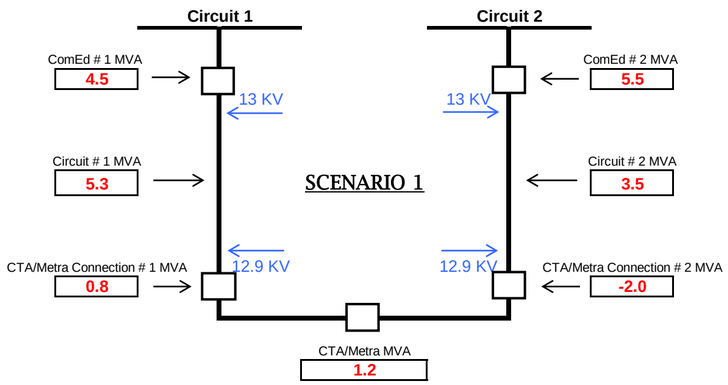

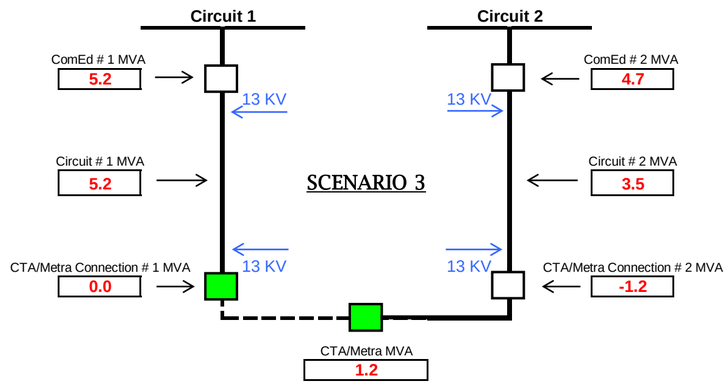

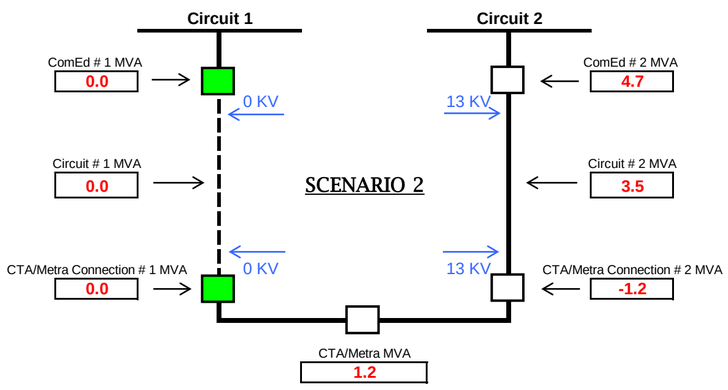

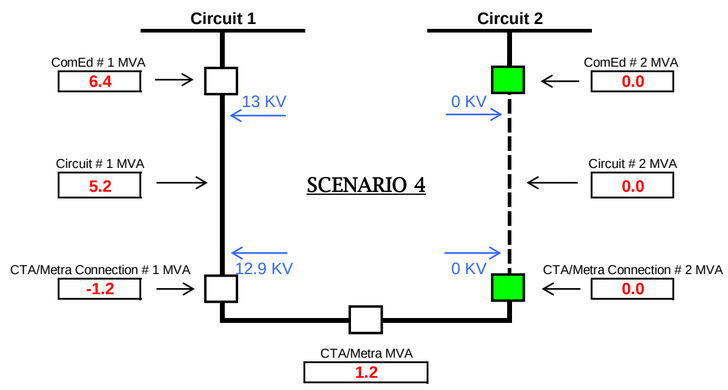

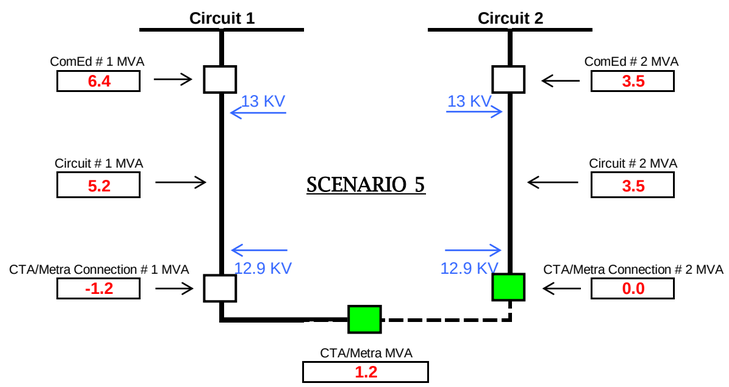
Circuit 1
Circuit 2
ComEd # 1 MVA
6.4
13 KV
13 KV
ComEd # 2 MVA
3.5
Circuit # 1 MVA
5.2
SCENARIO 5
Circuit # 2 MVA
3.5
CTA/Metra Connection # 1 MVA
-1.2
12.9 KV
12.9 KV
CTA/Metra Connection # 2 MVA
0.0
CTA/Metra MVA
1.2

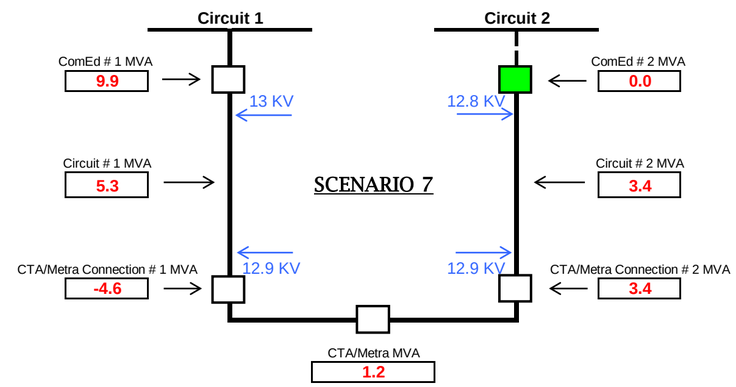
Circuit 1
Circuit 2
ComEd # 1 MVA
9.9
13 KV
12.8 KV
ComEd # 2 MVA
0.0
Circuit # 1 MVA
5.3
SCENARIO 7
Circuit # 2 MVA
3.4
CTA/Metra Connection # 1 MVA
-4.6
12.9 KV
12.9 KV
CTA/Metra Connection # 2 MVA
3.4
CTA/Metra MVA
1.2

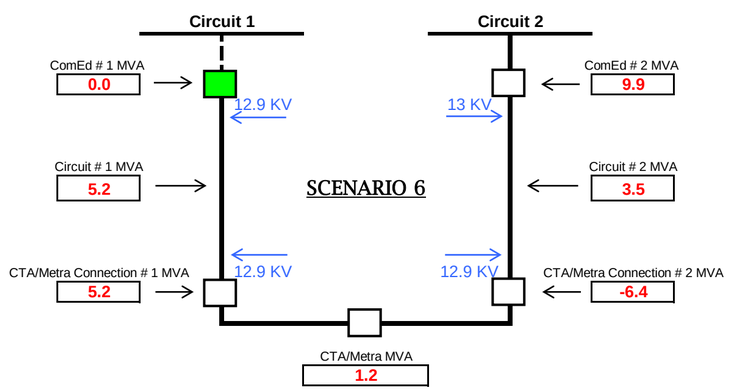
Circuit 1
Circuit 2
ComEd # 1 MVA
0.0
12.9 KV
13 KV
ComEd # 2 MVA
9.9
Circuit # 1 MVA
5.2
SCENARIO 6
Circuit # 2 MVA
3.5
CTA/Metra Connection # 1 MVA
5.2
12.9 KV
12.9 KV
CTA/Metra Connection # 2 MVA
-6.4
CTA/Metra MVA
1.2

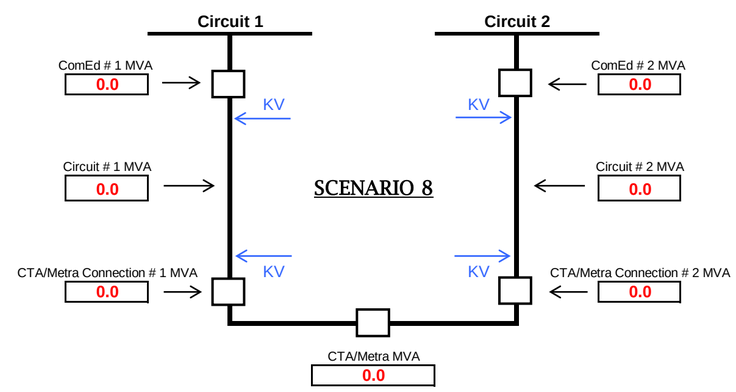
Circuit 1
Circuit 2
ComEd # 1 MVA
0.0
KV
KV
ComEd # 2 MVA
0.0
Circuit # 1 MVA
0.0
SCENARIO 8
Circuit # 2 MVA
0.0
CTA/Metra Connection # 1 MVA
0.0
KV
KV
CTA/Metra Connection # 2 MVA
0.0
CTA/Metra MVA
0.0

PPP CTA CYME Study Information

- [redacted], PPP CTA, assumed load demand [redacted] at [redacted] for each line (From load information provided by Cedar).

- [redacted], [redacted], assumed load demand [redacted] at [redacted] (From load information provided by CIMS and Cedar).

- [redacted] APT load information used.
  - [redacted] APT selected load date: [redacted]
  - [redacted] APT actual load on [redacted]: [redacted]/[redacted]/[redacted] ➔ [redacted]
  - [redacted] APT WA on selected load date: [redacted]
  - [redacted] WA load: [redacted]/[redacted]/[redacted] ➔ [redacted]
- [redacted] APT load information used.
  - [redacted] APT selected load date: [redacted]
  - [redacted] APT actual load on [redacted]: [redacted]/[redacted]/[redacted] ➔ [redacted]
  - [redacted] APT WA on selected load date [redacted]
  - [redacted] WA load: [redacted]/[redacted]/[redacted] ➔ [redacted]

- [redacted] APT load information used.
  - [redacted] APT selected load date: [redacted]
  - [redacted] APT actual load on [redacted]: [redacted]/[redacted]/[redacted] ➔ [redacted]
  - [redacted] APT WA on selected load date [redacted]
  - [redacted] WA load [redacted]/[redacted]/[redacted] ➔ [redacted]

- PPP CTA load allocation method
  - Validate in the CYME model all transformers, ESS loads, including [redacted] for each feeding line at [redacted] per Cedar meter information.
  - Open section [redacted], (i.e., assumed zero point of the network). This allowed for proper load allocation on the feeders.
  - Power factor [redacted] for [redacted] and [redacted] was used during allocation so as to obtain an adjusted load PF of [redacted] – [redacted]% on all feeders.
  - Ignore motors.
  - Open zero-point and allocate the loads.
  - Close zero-point and run analysis.

- Physical midpoint kV on feeder [redacted] is taken at section [redacted] and the endpoint kV is taken at section [redacted]
- Physical midpoint kV on feeder [redacted] is taken at section [redacted] and the endpoint kV is taken at section [redacted]

PPP CTA- CYME Study Results

Scenario	@ CTA -Connection #1 (MVA)	@ CTA - Connection #2 (MVA)	@ ComEd - Circuit #1 (MVA)	@ ComEd - Circuit #2 (MVA)	@ CTA -Connection #1 (kV)	@ CTA - Connection #2 (kV)	@ ComEd - Circuit #1 (kV)	@ ComEd - Circuit #2 (kV)	@ ComEd - Circuit #1 Midpoint (kV)	@ ComEd - Circuit #2 Midpoint (kV)	@ ComEd - Circuit #1 Endpoint (kV)	@ ComEd - Circuit #2 Endpoint (kV)
1	0.8	-2.0	4.5	5.5	12.9	12.9	13.0	13.0	12.9	13.0	12.9	12.9
2	0	-1.2	0	4.7	0	13.0	0	13.0	0	13.0	0	13.0
3	0	-1.2	5.2	4.7	13.0	13.0	13.0	13.0	12.9	13.0	12.9	13.0
4	-1.2	0	6.4	0	12.9	0	13.0	0	12.9	0	12.9	0
5	-1.2	0	6.4	3.5	12.9	12.9	13.0	13.0	12.9	13.0	12.9	13.0
6	5.2	-6.4	0	9.9	12.9	12.9	12.9	13.0	12.9	12.9	12.8	12.9
7	-4.6	3.4	9.9	0	12.9	12.9	13.0	12.8	12.9	12.8	12.9	12.8

Scenario:

Scenario 1: @ CTA/Metra connection #1 and #2 closed, @ ComEd circuit #1 and #2 closed. This represents the normal condition.

Scenario 2: @ CTA/Metra connection #1 open and #2 closed, @ ComEd circuit #1 open and #2 closed. This represents an outage of ComEd circuit #1.

Scenario 3: @ CTA/Metra connection #1 and bus tie open and #2 closed, @ ComEd circuit #1 and #2 closed. This represents an outage of CTA/Metra Bus #1.

Scenario 4: @ CTA/Metra connection #1 closed and #2 open, @ ComEd circuit #1 closed and #2 open. This represents an outage of ComEd circuit #2.

Scenario 5: @ CTA/Metra connection #1 closed and #2 and bus tie open, @ ComEd circuit #1 and #2 closed. This represents an outage of CTA/Metra Bus #2.

Scenario 6: @ CTA/Metra connection #1 and #2 closed, @ ComEd circuit #1 open and #2 closed. This represents loss of source for ComEd circuit #1.

Scenario 7: @ CTA/Metra connection #1 and #2 closed, @ ComEd circuit #1 closed and #2 open. This represents loss of source for ComEd circuit #2.

CONFIDENTIAL AND PROPRIETARY - CEII

PPP SUBSTATION

Q & U CTA CYME Study Results

Scenario	@ Metra Connection #1 (MVA)	@ Metra Connection #2 (MVA)	@ Metra Connection #3 (MVA)	@ Metra Connection #4 (MVA)	@Metra Connection #5 (MVA)	@ComEd Circuit #1 (MVA)	@ComEd Circuit #2 (MVA)	@ ComEd Circuit #3 (MVA)	@ Metra Connection #1 (kV)	@ Metra Connection #2 (kV)	@ Metra Connection #3 (kV)	@ Metra Connection #4 (kV)	@ Metra Connection #5 (kV)
1	-2.5	-2.1	-2.8	-2.8	-3.4	6.6	5.1	4.4	12.0	12.0	12.1	12.1	12.1
2	0.0	-4.6	0.0	-3.2	-5.7	0.0	8.4	7.0	0.0	11.5	0.0	11.8	11.8
3	0.0	-4.6	-4.4	-0.9	-3.7	5.6	5.8	4.8	12.3	11.7	12.0	12.0	12.0
4	-3.5	-1.1	0.0	-4.7	-4.2	4.8	6.1	5.3	11.9	11.9	12.3	12.0	12.0
5	-4.6	0.0	-3.8	0.0	-5.1	10.2	0.0	6.3	11.6	0.0	11.9	0.0	11.9
6	-4.6	0.0	-1.5	-4.4	-3.1	7.6	4.5	4.1	11.7	12.2	12.1	12.1	12.1
7	-1.4	-3.2	-4.5	0.0	-4.4	7.3	3.4	5.5	12.0	12.0	11.9	12.3	11.9
8	-2.9	-1.7	-4.2	-4.7	0.0	8.6	6.8	0.0	11.9	11.9	11.9	11.9	0.0
9	-2.9	-1.7	-4.2	-4.7	0.0	8.6	6.8	0.9	11.9	11.9	11.9	11.9	12.4
10	-0.8	-3.8	1.9	-4.6	-6.3	0.0	9.1	7.6	11.5	11.5	11.7	11.7	11.7
11	-3.4	-1.2	-4.8	1.2	-5.4	9.8	0.0	6.6	11.7	11.7	11.8	11.8	11.8
12	-3.0	-1.6	-4.6	-5.2	0.9	9.1	7.3	0.0	11.8	11.8	11.9	11.9	11.9

@ ComEd Circuit #1 (kV)	@ ComEd Circuit #2 (kV)	@ ComEd Circuit #3 (kV)	
12.4	12.4	12.4	kV
0.0	12.3	12.4	
12.4	12.4	12.4	
12.4	12.4	12.4	
12.3	0.0	12.4	
12.3	12.4	12.4	
12.3	12.4	12.4	
12.3	12.4	0.0	
12.3	12.4	12.5	
11.6	12.3	12.4	
12.3	11.8	12.4	
12.3	12.4	11.9	

Q & U CTA Cyme Results Comparison

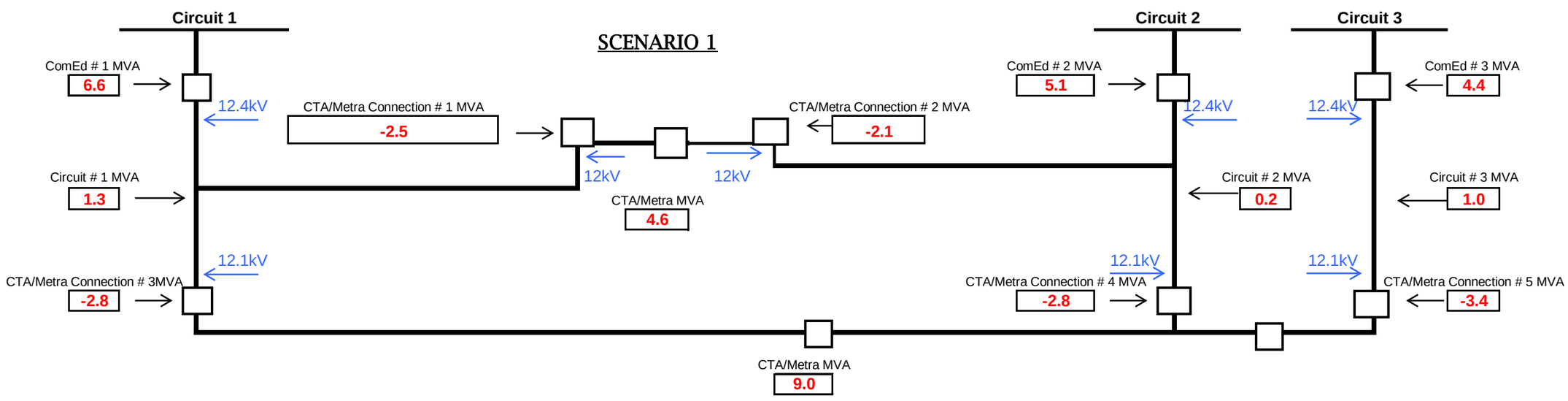

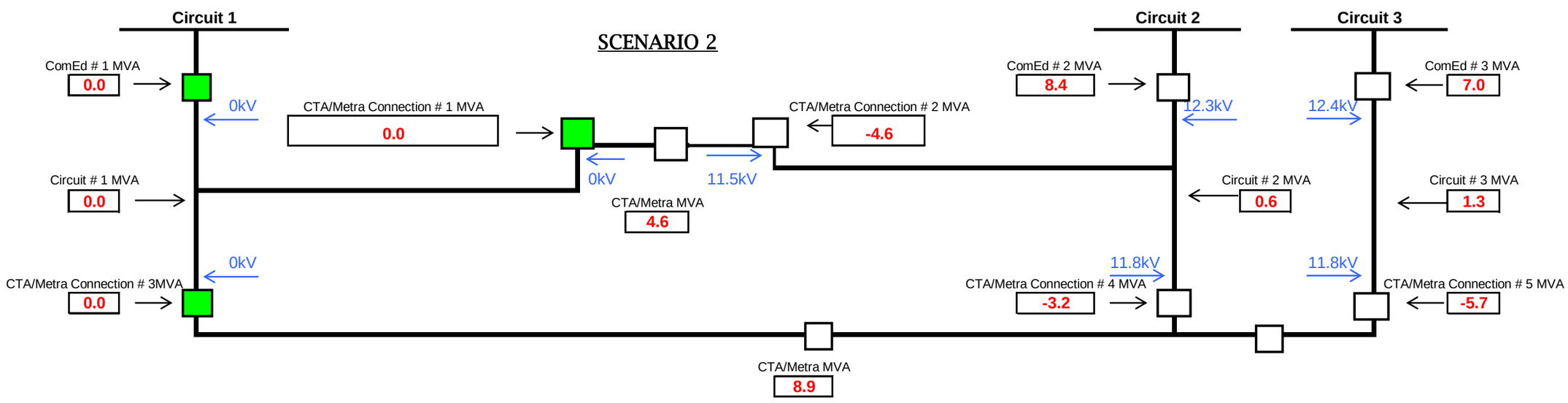

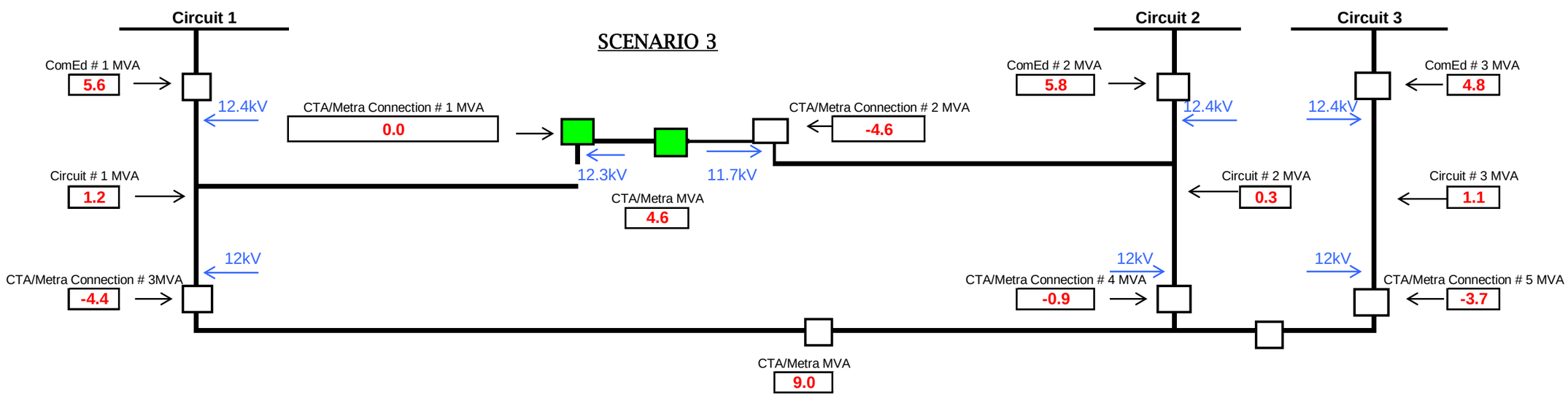

SCENARIO 4

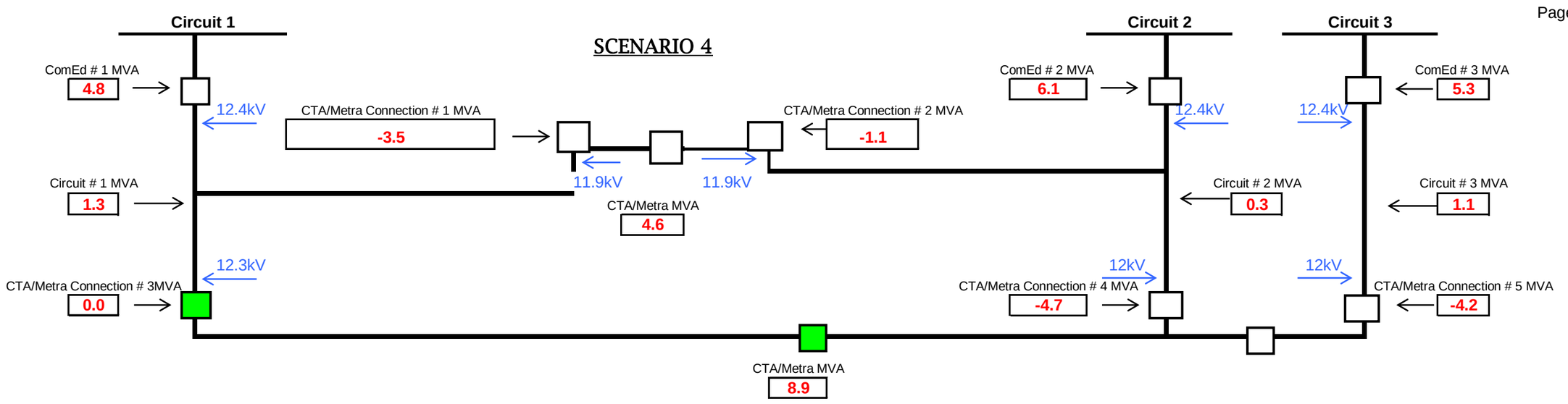

SCENARIO 5

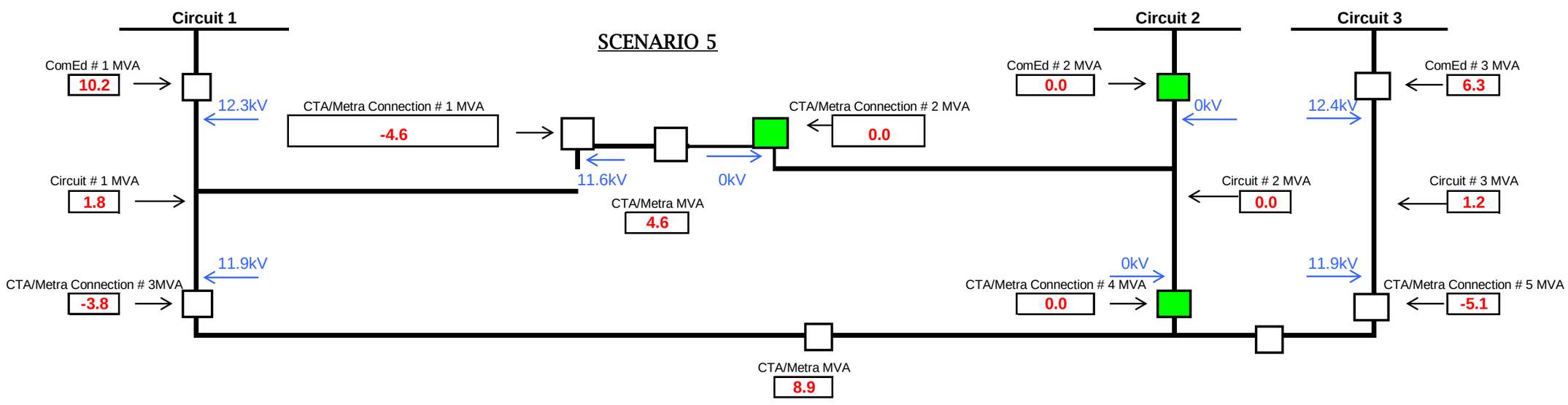

SCENARIO 6

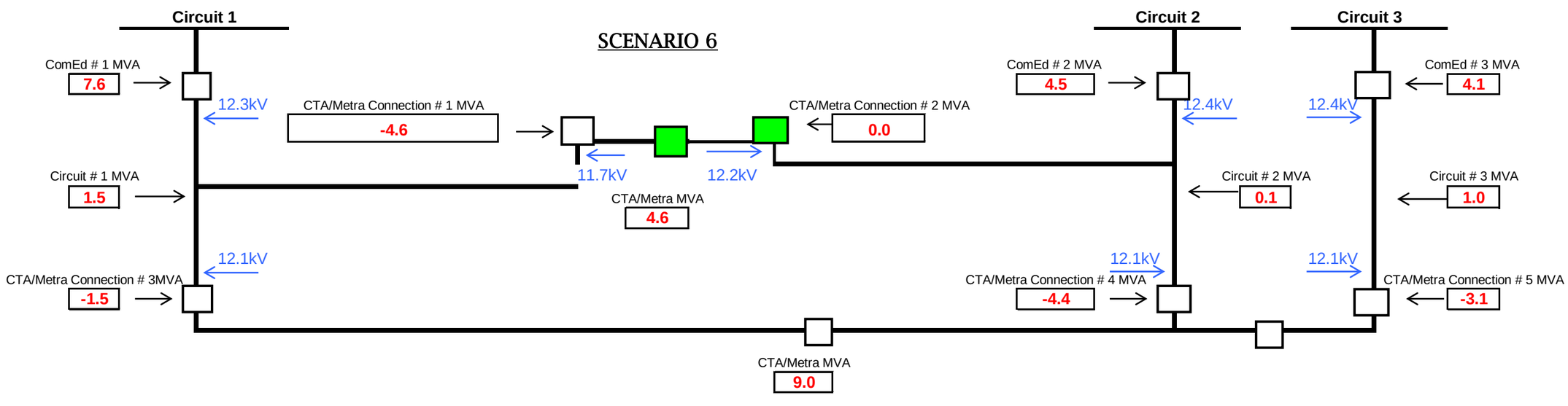

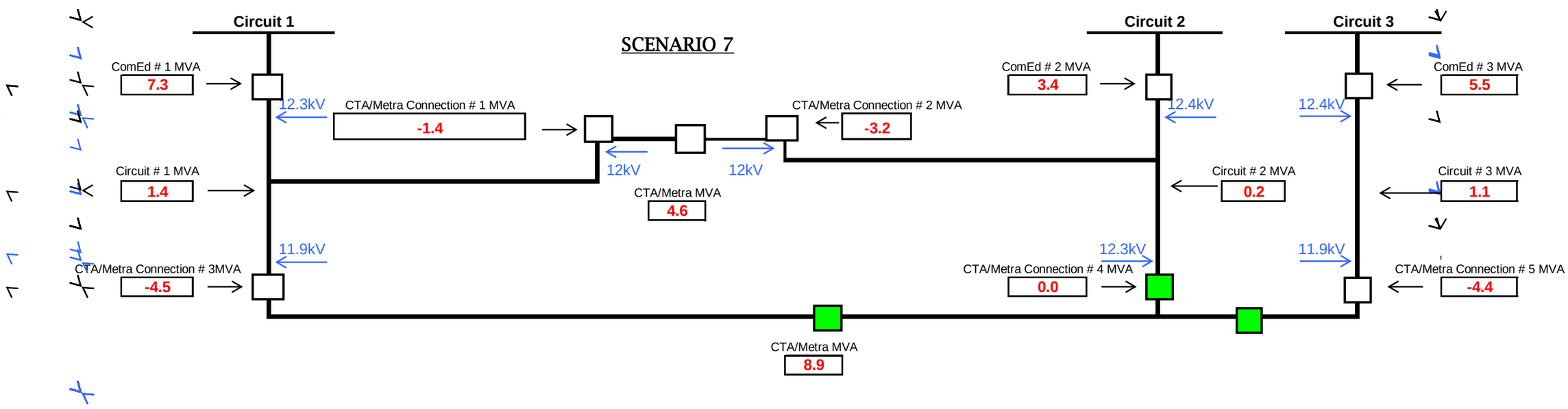
SCENARIO 7
Circuit 1
Circuit 2
Circuit 3
ComEd # 1 MVA
7.3
12.3kV
CTA/Metra Connection # 1 MVA
-1.4
CTA/Metra Connection # 2 MVA
-3.2
ComEd # 2 MVA
3.4
12.4kV
12.4kV
ComEd # 3 MVA
5.5
12kV
12kV
Circuit # 1 MVA
1.4
CTA/Metra MVA
4.6
Circuit # 2 MVA
0.2
Circuit # 3 MVA
1.1
11.9kV
12.3kV
11.9kV
CTA/Metra Connection # 3MVA
-4.5
CTA/Metra Connection # 4 MVA
0.0
CTA/Metra Connection # 5 MVA
-4.4
CTA/Metra MVA
8.9

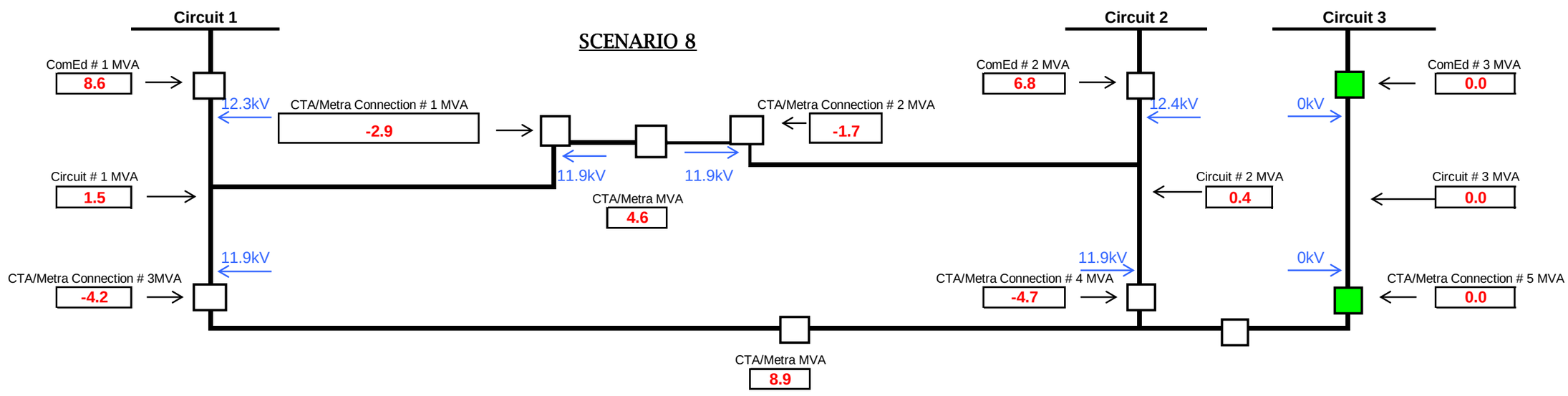
SCENARIO 8
Circuit 1
Circuit 2
Circuit 3
ComEd # 1 MVA
8.6
12.3kV
CTA/Metra Connection # 1 MVA
-2.9
CTA/Metra Connection # 2 MVA
-1.7
ComEd # 2 MVA
6.8
12.4kV
0kV
ComEd # 3 MVA
0.0
11.9kV
11.9kV
Circuit # 1 MVA
1.5
CTA/Metra MVA
4.6
Circuit # 2 MVA
0.4
Circuit # 3 MVA
0.0
11.9kV
11.9kV
0kV
CTA/Metra Connection # 3MVA
-4.2
CTA/Metra Connection # 4 MVA
-4.7
CTA/Metra Connection # 5 MVA
0.0
CTA/Metra MVA
8.9

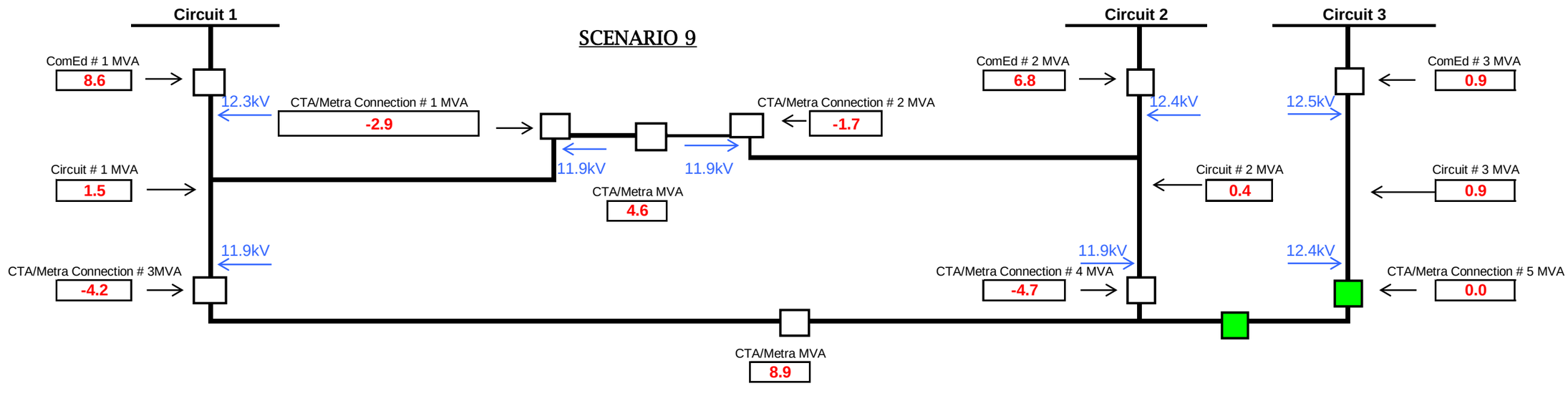
SCENARIO 9
Circuit 1
Circuit 2
Circuit 3
ComEd # 1 MVA
8.6
12.3kV
CTA/Metra Connection # 1 MVA
-2.9
CTA/Metra Connection # 2 MVA
-1.7
ComEd # 2 MVA
6.8
12.4kV
12.5kV
ComEd # 3 MVA
0.9
11.9kV
11.9kV
Circuit # 1 MVA
1.5
CTA/Metra MVA
4.6
Circuit # 2 MVA
0.4
Circuit # 3 MVA
0.9
11.9kV
11.9kV
12.4kV
CTA/Metra Connection # 3MVA
-4.2
CTA/Metra Connection # 4 MVA
-4.7
CTA/Metra Connection # 5 MVA
0.0
CTA/Metra MVA
8.9

SCENARIO 10

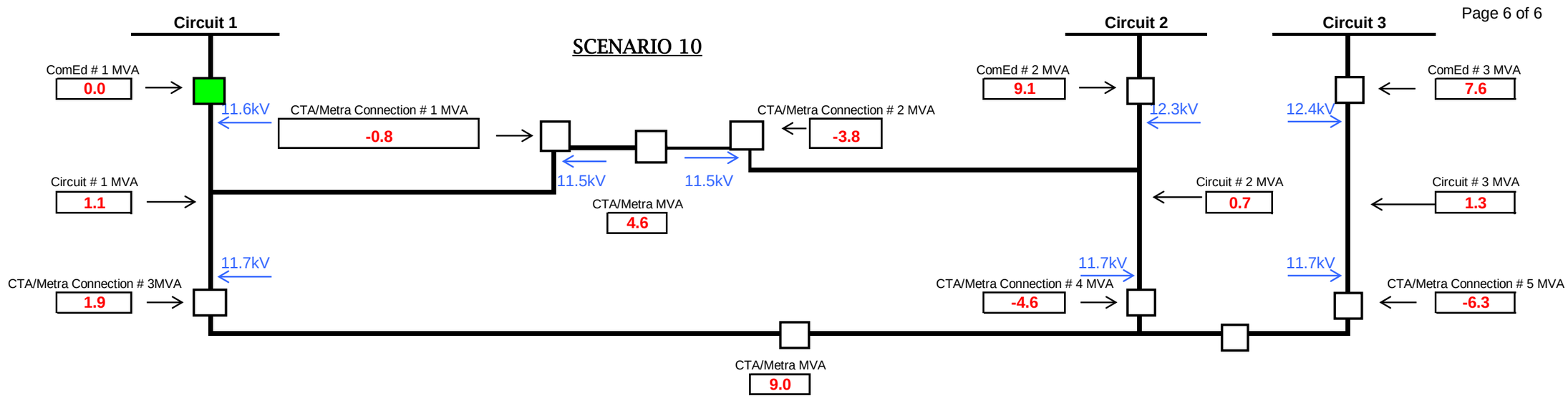

SCENARIO 11

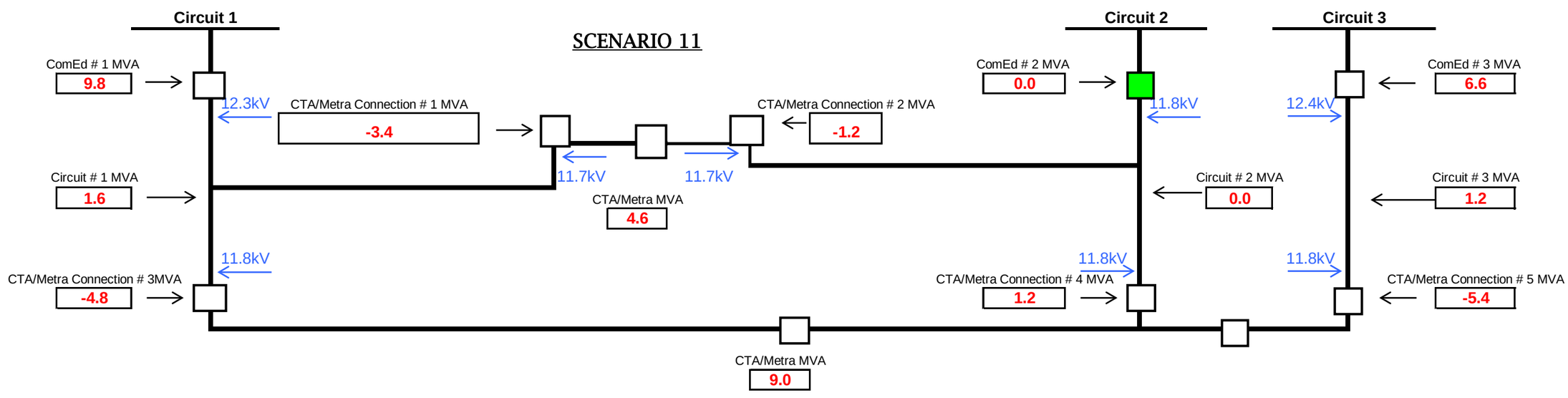

SCENARIO 12

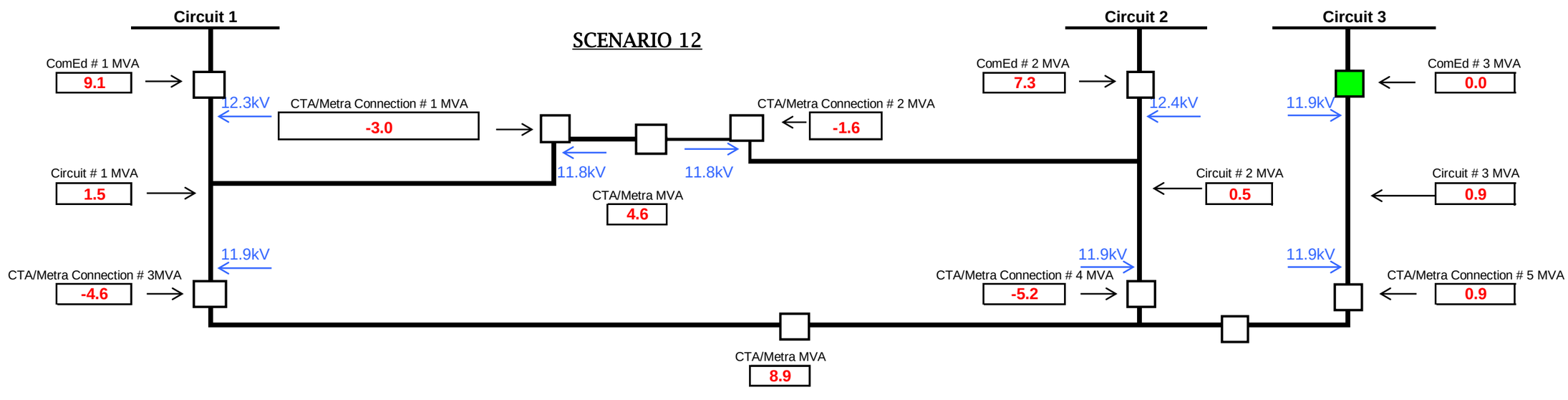

Q & U CTA CYME Study Information

- CEGIS "Transformer Lookup" load data was used with [redacted]pf for [redacted], [redacted], and [redacted] ([redacted])
- [redacted] and [redacted] has no customers per SBT. [redacted]has customers but was not connected until after summer of [redacted]. Therefore, there is no load for these three transformers ([redacted]).
- [redacted], in [redacted] [redacted], has customers listed in SBT but load did not come on line until after summer of [redacted]
- Q Metra substation load obtained from CEDAR for [redacted] (KW with [redacted]).
- U Metra substation load obtained from CEDAR for [redacted] (KW with [redacted]).
- [redacted] [redacted] ([redacted]) on [redacted] serves [redacted], [redacted], [redacted], [redacted]-[redacted], [redacted], [redacted], [redacted], [redacted], and [redacted]. However, no loads were pulled for these transformers. Load at [redacted] was calculated using PI and Ranger and inserted on [redacted].
- [redacted] Aux Power [redacted] serves [redacted]. However, no load was pulled for the transformer. Load at [redacted] was calculated using PI and inserted on [redacted].
- [redacted] was extracted from CEGIS but is only in the design stages at the time of this study. [redacted] is disconnected in the CYME model.
- [redacted] APT load information used.
  - [redacted] APT selected load date: [redacted]
  - [redacted] APT actual load on [redacted]: [redacted]A/[redacted]A/[redacted]A ➔ [redacted]A
  - [redacted] APT WA on selected load date: [redacted]
  - [redacted] WA load: [redacted]A/[redacted]A/[redacted]A ➔ [redacted]A
- [redacted] APT load information used.
  - [redacted] APT selected load date: [redacted]
  - [redacted] APT actual load on [redacted]: [redacted]A/[redacted]A/[redacted]A ➔ [redacted]A
  - [redacted] APT WA on selected load date: [redacted]
  - [redacted] WA load: [redacted]A/[redacted]A/[redacted]A ➔ [redacted]A
- [redacted] APT load information used.
  - [redacted] APT selected load date: [redacted]
  - [redacted] APT actual load on [redacted]: [redacted]A/[redacted]A/[redacted]A ➔ [redacted]A
  - [redacted] APT WA on selected load date: [redacted]
  - [redacted] WA load: [redacted]A/[redacted]A/[redacted]A ➔ [redacted]A

- Q and U Metra load allocation method
  - Open bus tie at Q and U Metra substation
  - Allocate [redacted]A ([redacted]A minus [redacted]A to [redacted] minus [redacted]A to [redacted]) on [redacted].
  - Allocate [redacted]A ([redacted]A plus [redacted]A from [redacted] minus [redacted]A to [redacted]) on [redacted].
  - Allocate [redacted]A ([redacted]A plus [redacted]A from [redacted] plus [redacted]A from [redacted]) on [redacted].
  - [redacted]A is the [redacted]A of flow from [redacted] with [redacted] WA at the zero point prior to radial load allocation at [redacted].
  - [redacted]A is the [redacted]A of flow from [redacted] with [redacted] WA at the zero point prior to radial load allocation at [redacted].
  - [redacted]A is the [redacted]A of flow from [redacted] with [redacted] WA at the zero point prior to radial load allocation at [redacted].
  - Ignore motors.
  - Adjust pf at source ([redacted]pf for [redacted], [redacted]pf for [redacted], [redacted]pf for [redacted]) and allocate to obtain an adjusted load PF of [redacted]–[redacted] on all feeders ([redacted] for [redacted], [redacted] for [redacted], [redacted] for [redacted]).
  - Close bus tie at [redacted] and [redacted] substation and run analysis

- [redacted] midpoint KV taken at cable section [redacted] and endpoint KV taken at cable section [redacted].

- [redacted] midpoint KV taken at cable section [redacted] and endpoint KV taken at cable section [redacted].

- [redacted] midpoint KV taken at cable section [redacted] and endpoint KV taken at cable section [redacted].

PUBLIC

Q & U CTA CYME Study Results

Scenario	@ Metra Connection #1 (MVA)	@ Metra Connection #2 (MVA)	@ Metra Connection #3 (MVA)	@ Metra Connection #4 (MVA)	@ Metra Connection #5 (MVA)	@ ComEd Circuit #1 (MVA))	@ ComEd Circuit #2 (MVA)	@ ComEd Circuit #3 (MVA)	@ Metra Connection #1 (kV)	@ Metra Connection #2 (kV)	@ Metra Connection #3 (kV)	@ Metra Connection #4 (kV)	@ Metra Connection #5 (kV)	@ ComEd Circuit #1 (kV)	@ ComEd Circuit #2 (kV)	@ ComEd Circuit #3 (kV)	@ ComEd - Circuit #1 Midpoint (kV)	@ ComEd - Circuit #2 Midpoint (kV)	@ ComEd - Circuit #3 Midpoint (kV)	@ ComEd - Circuit #1 Endpoint (kV)	@ ComEd - Circuit #2 Endpoint (kV)	@ ComEd - Circuit #3 Endpoint (kV)
1	-2.5	-2.1	-2.8	-2.8	-3.4	+6.6	+5.1	+4.4	12.0	12.0	12.1	12.1	12.1	12.4	12.4	12.4	12.1	12.1	12.2	12.0	12.0	12.1
2	0.0	-4.6	0.0	-3.2	-5.7	0.0	+8.4	+7.0	0.0	11.5	0.0	11.8	11.8	0.0	12.3	12.4	0.0	11.8	12.1	0.0	11.5	11.8
3	0.0	-4.6	-4.4	-0.9	-3.7	+5.6	+5.8	+4.8	12.3	11.7	12.0	12.0	12.0	12.4	12.4	12.4	12.3	12.0	12.2	12.3	11.7	12.0
4	-3.5	-1.1	0.0	-4.7	-4.2	+4.8	+6.1	+5.3	11.9	11.9	12.3	12.0	12.0	12.4	12.4	12.4	12.2	12.0	12.2	11.9	11.9	12.0
5	-4.6	0.0	-3.8	0.0	-5.1	+10.2	0.0	+6.3	11.6	0.0	11.9	0.0	11.9	12.3	0.0	12.4	11.9	0.0	12.1	11.6	0.0	11.9
6	-4.6	0.0	-1.5	-4.4	-3.1	+7.6	+4.5	+4.1	11.7	12.2	12.1	12.1	12.1	12.3	12.4	12.4	12.0	12.2	12.3	11.7	12.2	12.1
7	-1.4	-3.2	-4.5	0.0	-4.4	+7.3	+3.4	+5.5	12.0	12.0	11.9	12.3	11.9	12.3	12.4	12.4	12.2	12.3	12.2	12.0	12.0	12.0
8	-2.9	-1.7	-4.2	-4.7	0.0	+8.6	+6.8	0.0	11.9	11.9	11.9	11.9	0.0	12.3	12.4	0.0	12.1	12.0	0.0	11.9	11.9	0.0
9	-2.9	-1.7	-4.2	-4.7	0.0	+8.6	+6.8	+0.9	11.9	11.9	11.9	11.9	12.4	12.3	12.4	12.5	12.1	12.0	12.4	11.9	11.9	12.4
10	-0.8	-3.8	+1.9	-4.6	-6.3	0.0	+9.1	+7.6	11.5	11.5	11.7	11.7	11.7	11.6	12.3	12.4	11.6	11.8	12.0	11.5	11.5	11.7
11	-3.4	-1.2	-4.8	+1.2	-5.4	+9.8	0.0	+6.6	11.7	11.7	11.8	11.8	11.8	12.3	11.8	12.4	12.0	11.8	12.1	11.7	11.7	11.9
12	-3.0	-1.6	-4.6	-5.2	+0.9	+9.1	+7.3	0.0	11.8	11.8	11.9	11.9	11.9	12.3	12.4	11.9	12.0	11.9	11.9	11.8	11.8	11.9

Scenario:

Scenario 1: @ CTA/Metra connection #1, #2, #3, #4, and #5 closed, @ ComEd circuit #1, #2, and#3 closed. This represents the normal condition.

Scenario 2: @ CTA/Metra connection #1 and #3 open and #2, #4, and #5 closed, @ ComEd circuit #1 open and #2 and #3 closed. This represents an outage of ComEd circuit #1.

Scenario 3: @ CTA/Metra connection #1 and bus tie open and #2, #3, #4, and #5 closed, @ ComEd circuit #1, #2, and #3 closed. This represents an outage of CTA/Metra Bus #1.

Scenario 4: @ CTA/Metra connection #3 and bus tie open and #1, #2, #4, and #5 closed, @ ComEd circuit #1, #2, and #3 closed. This represents an outage of CTA/Metra Bus #3.

Scenario 5: @ CTA/Metra connection #2 and #4 open and #1, #3, and #5 closed, @ ComEd circuit #2 open and #1 and #3 closed. This represents an outage of ComEd circuit #2.

Scenario 6: @ CTA/Metra connection #2 and bus tie open and #1, #3, #4, and #5 closed, @ ComEd circuit #1, #2, and #3 closed. This represents an outage of CTA/Metra Bus #2.

Scenario 7: @ CTA/Metra connection #4 and both bus ties open and #1, #2, #3, and #5 closed, @ ComEd circuit #1, #2, and #3 closed. This represents an outage of CTA/Metra Bus #4.

Scenario 8: @ CTA/Metra connection #5 open and #1, #2, #3, and #4 closed, @ ComEd circuit #3 open and #1 and #2 closed. This represents an outage of ComEd circuit #3.

Scenario 9: @ CTA/Metra connection #5 and bus tie open and #1, #2, #3, and #4 closed, @ ComEd circuit #1, #2, and #3 closed. This represents an outage of CTA/Metra Bus #5.

Scenario 10: @ CTA/Metra connection #1, #2, #3, #4, and #5 closed, @ ComEd circuit #1 open and #2 and #3 closed. This represents loss of source for ComEd circuit #1.

Scenario 11: @ CTA/Metra connection #1, #2, #3, #4, and #5 closed, @ ComEd circuit #2 open and #1 and #3 closed. This represents loss of source for ComEd circuit #2.

Scenario 12: @ CTA/Metra connection #1, #2, #3, #4, and #5 closed, @ ComEd circuit #3 open and #1 and #2 closed. This represents loss of source for ComEd circuit #3.

CONFIDENTIAL AND PROPRIETARY - CEII

Q & U SUBSTATION

QQ CYME Study Results

Scenario	@ CTA / Metra - Connection #1 (MVA)	@ CTA / Metra - Connection #2 (MVA)	@ ComEd - Circuit #1 (MVA)	@ ComEd - Circuit #2 (MVA)	@ CTA / Metra - Connection #1 (kV)	@ CTA / Metra - Connection #2 (kV)	@ ComEd - Circuit #1 (kV)	@ ComEd - Circuit #2 (kV)
1	-1.7	-1.1	5.7	5.5	12.3	12.3	12.5	12.5
2	0.0	-2.8	0.0	7.2	0.0	12.3	0.0	12.5
3	0.0	-2.8	4.0	7.2	12.3	12.3	12.5	12.5
4	-2.8	0.0	6.9	0.0	12.2	0.0	12.5	0.0
5	-2.8	0.0	6.9	4.4	12.2	12.3	12.5	12.5
6	3.8	-6.5	0.0	11.1	12.0	12.0	12.0	12.5
7	-6.9	4.2	11.1	0.0	12.1	12.1	12.5	12.0
8								

QQ Cyme Results Comparison

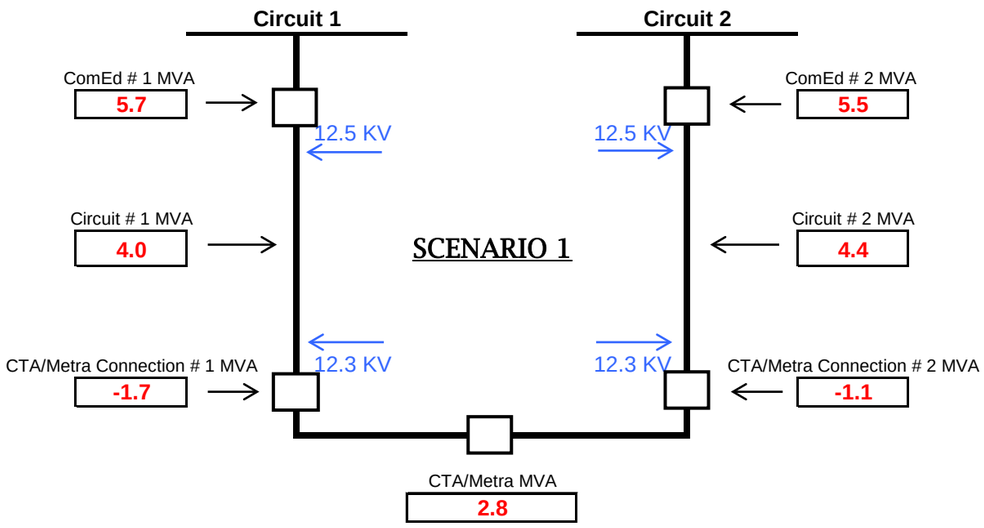

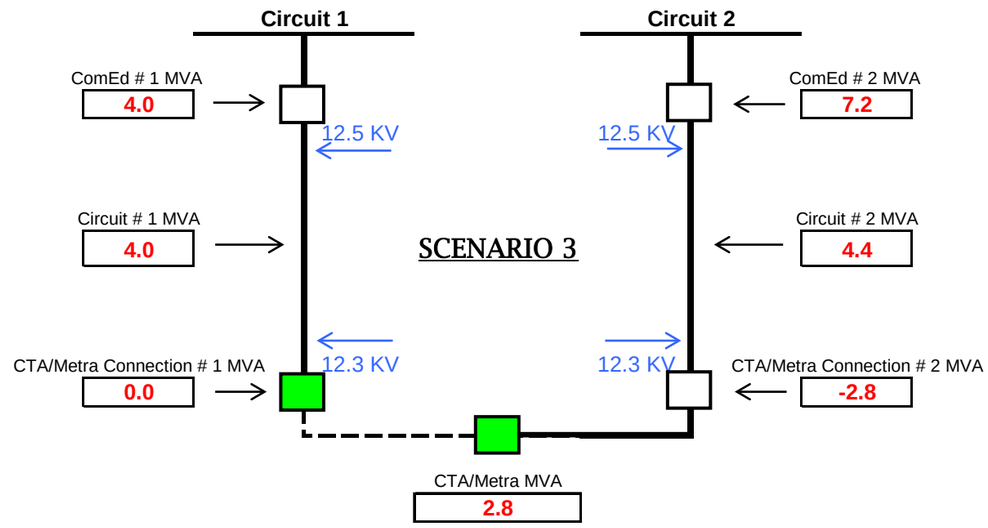

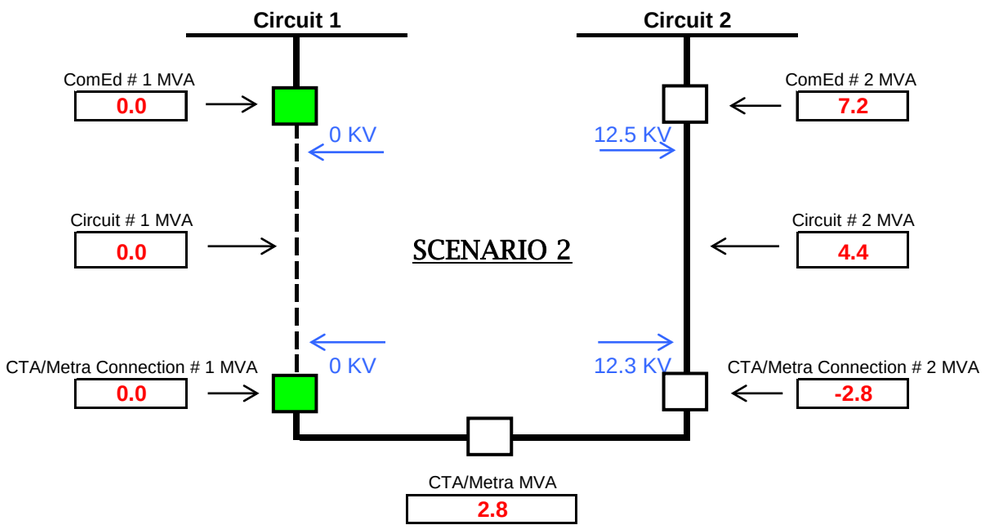

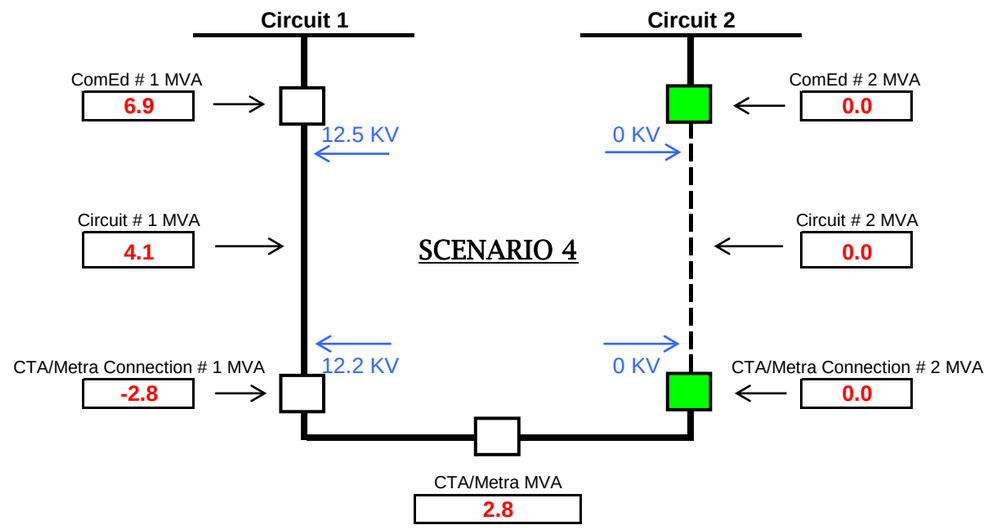

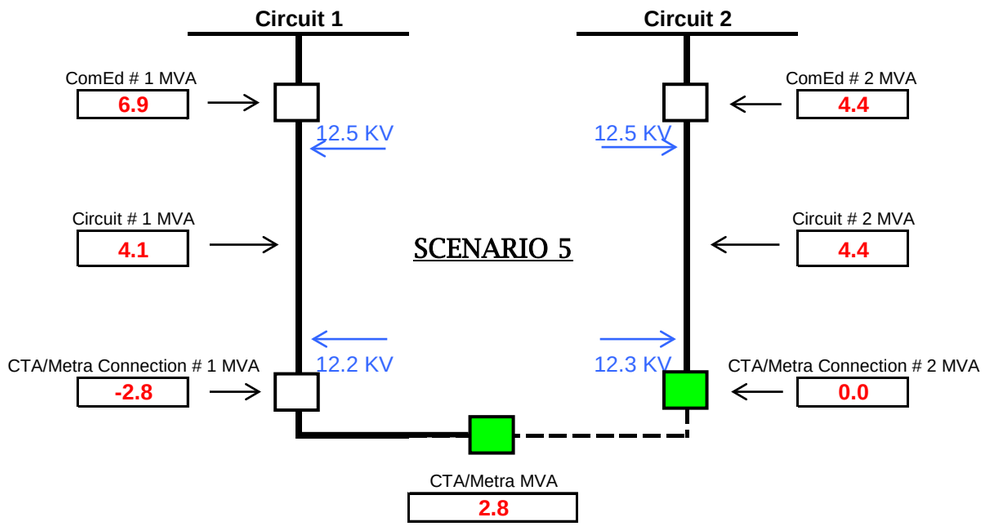
Circuit 1
Circuit 2
ComEd # 1 MVA
6.9
12.5 KV
12.5 KV
ComEd # 2 MVA
4.4
Circuit # 1 MVA
4.1
SCENARIO 5
Circuit # 2 MVA
4.4
CTA/Metra Connection # 1 MVA
-2.8
12.2 KV
12.3 KV
CTA/Metra Connection # 2 MVA
0.0
CTA/Metra MVA
2.8

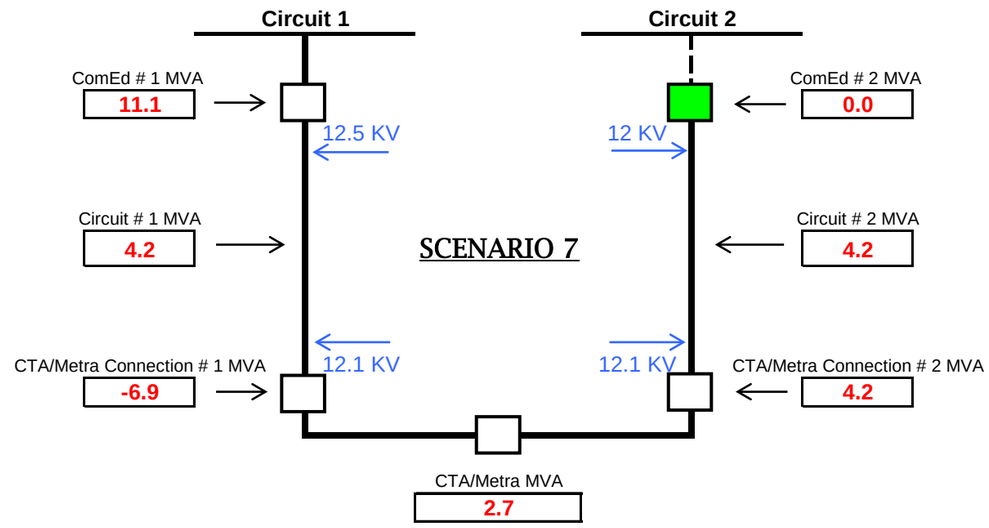
Circuit 1
Circuit 2
ComEd # 1 MVA
11.1
12.5 KV
12 KV
ComEd # 2 MVA
0.0
Circuit # 1 MVA
4.2
SCENARIO 7
Circuit # 2 MVA
4.2
CTA/Metra Connection # 1 MVA
-6.9
12.1 KV
12.1 KV
CTA/Metra Connection # 2 MVA
4.2
CTA/Metra MVA
2.7

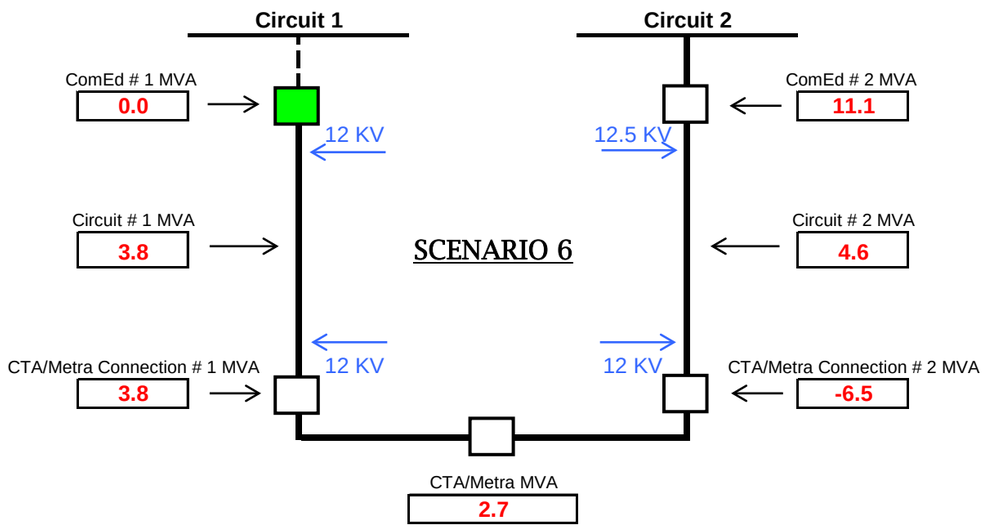
Circuit 1
Circuit 2
ComEd # 1 MVA
0.0
12 KV
12.5 KV
ComEd # 2 MVA
11.1
Circuit # 1 MVA
3.8
SCENARIO 6
Circuit # 2 MVA
4.6
CTA/Metra Connection # 1 MVA
3.8
12 KV
12 KV
CTA/Metra Connection # 2 MVA
-6.5
CTA/Metra MVA
2.7

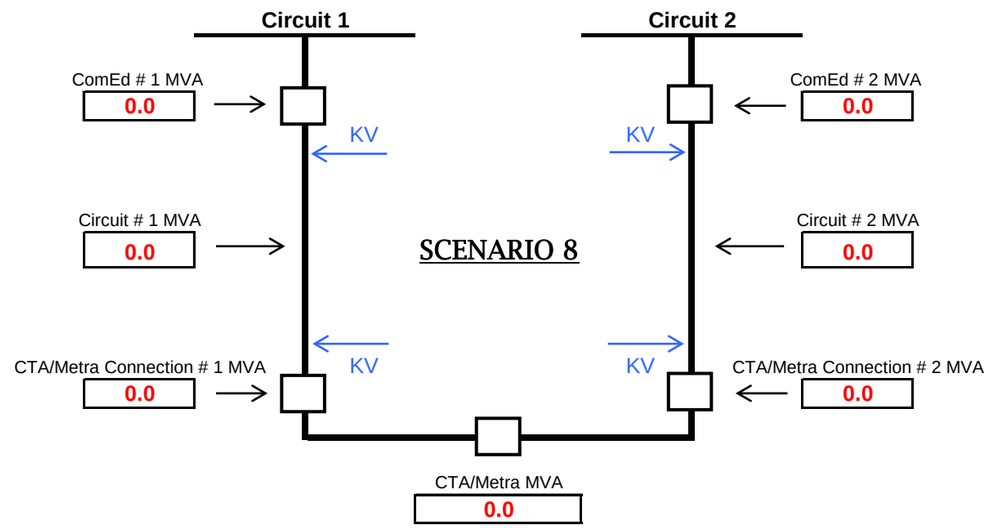
Circuit 1
Circuit 2
ComEd # 1 MVA
0.0
KV
KV
ComEd # 2 MVA
0.0
Circuit # 1 MVA
0.0
SCENARIO 8
Circuit # 2 MVA
0.0
CTA/Metra Connection # 1 MVA
0.0
KV
KV
CTA/Metra Connection # 2 MVA
0.0
CTA/Metra MVA
0.0

QQ- CYME Study Information

- [redacted], assumed load demand of [redacted]kW (load information obtained from CIMS and TED).

- [redacted]) substation load was obtained from Cedar Loads. Peak load for each feeding line is [redacted]kW with assumed PF=[redacted].

- [redacted] APT load information used.
  - [redacted] APT selected load date: [redacted]
  - [redacted] APT actual load on [redacted]: [redacted] ➔ [redacted]
  - [redacted] APT WA on selected load date: [redacted]
  - [redacted] WA load: [redacted] ➔ [redacted]

- [redacted] APT load information used.
  - [redacted] APT selected load date: [redacted]
  - [redacted] APT actual load on [redacted]: [redacted] ➔ [redacted]
  - [redacted] APT WA on selected load date: [redacted]
  - [redacted] WA load: [redacted] ➔ [redacted]

- [redacted] [redacted] load allocation method
  - Validate in the CYME model all transformers, ESS loads, including [redacted] kVA for each feeding line at [redacted]per Cedar meter information.
  - Open section 485670162 (zero point). This allowed for proper load allocation on the feeders.
  - Power factor of [redacted]% for [redacted] and [redacted]% for [redacted] were used during allocation so as to obtain an adjusted load PF of [redacted]% on all feeders.
  - Close zero-point and run analysis.

- Physical midpoint kV on feeder [redacted] is taken at section 485545020-1 and physical endpoint kV is taken at section 485533816.

- Physical midpoint kV on feeder [redacted] is taken at section 485533816 and physical endpoint kV is taken at section 239790944.

QQ-CYME Study Results

Scenario	@ CTA -Connection #1 (MVA)	@ CTA - Connection #2 (MVA)	@ ComEd - Circuit #1 (MVA)	@ ComEd - Circuit #2 (MVA)	@ CTA -Connection #1 (kV)	@ CTA - Connection #2 (kV)	@ ComEd - Circuit #1 (kV)	@ ComEd - Circuit #2 (kV)	@ ComEd - Circuit #1 Midpoint (kV)	@ ComEd - Circuit #2 Midpoint (kV)	@ ComEd - Circuit #1 Endpoint (kV)	@ ComEd - Circuit #2 Endpoint (kV)
1	-1.7	-1.1	5.7	5.5	12.3	12.3	12.5	12.5	12.5	12.4	12.5	12.3
2	0.0	-2.8	0.0	7.2	0.0	12.3	0.0	12.5	0.0	12.4	0.0	12.3
3	0.0	-2.8	4.0	7.2	12.3	12.3	12.5	12.5	12.5	12.4	12.5	12.3
4	-2.8	0.0	6.9	0.0	12.2	0.0	12.5	0.0	12.5	0.0	12.4	0.0
5	-2.8	0.0	6.9	4.4	12.2	12.3	12.5	12.5	12.5	12.4	12.4	12.4
6	3.8	-6.5	0.0	11.1	12.0	12.0	12.0	12.5	12.3	12.2	12.2	12.2
7	-6.9	4.2	11.1	0.0.	12.1	12.1	12.5	12.0	12.4	12.0	12.3	12.0

Scenario:

Scenario 1: @ CTA/Metra connection #1 and #2 closed, @ ComEd circuit #1 and #2 closed. This represents the normal condition.

Scenario 2: @ CTA/Metra connection #1 open and #2 closed, @ ComEd circuit #1 open and #2 closed. This represents an outage of ComEd circuit #1.

Scenario 3: @ CTA/Metra connection #1 and bus tie open and #2 closed, @ ComEd circuit #1 and #2 closed. This represents an outage of CTA/Metra Bus #1.

Scenario 4: @ CTA/Metra connection #1 closed and #2 open, @ ComEd circuit #1 closed and #2 open. This represents an outage of ComEd circuit #2.

Scenario 5: @ CTA/Metra connection #1 closed and #2 and bus tie open, @ ComEd circuit #1 and #2 closed. This represents an outage of CTA/Metra Bus #2.

Scenario 6: @ CTA/Metra connection #1 and #2 closed, @ ComEd circuit #1 open and #2 closed. This represents loss of source for ComEd circuit #1.

Scenario 7: @ CTA/Metra connection #1 and #2 closed, @ ComEd circuit #1 closed and #2 open. This represents loss of source for ComEd circuit #2.

CONFIDENTIAL AND PROPRIETARY - CEII

QQ SUBSTATION

RR CYME Study Results

Scenario	@ CTA / Metra - Connection #1 (MVA)	@ CTA / Metra - Connection #2 (MVA)	@ ComEd - Circuit #1 (MVA)	@ ComEd - Circuit #2 (MVA)	@ CTA / Metra - Connection #1 (kV)	@ CTA / Metra - Connection #2 (kV)	@ ComEd - Circuit #1 (kV)	@ ComEd - Circuit #2 (kV)
1	0.3	-2.1	4.0	5.8	12.6	12.6	13.0	13.0
2	0.0	-1.9	0.0	5.6	0.0	12.6	0.0	13.0
3	0.0	-1.9	4.3	5.6	12.6	12.6	13.0	13.0
4	-1.9	0.0	6.1	0.0	12.3	0.0	13.0	0.0
5	-1.9	0.0	6.1	3.6	12.3	12.8	13.0	13.0
6	4.1	-5.9	0.0	9.7	12.4	12.4	12.4	13.0
7	-5.1	3.3	9.6	0.0	11.8	11.8	13.0	11.7

RR Cyme Results Comparison

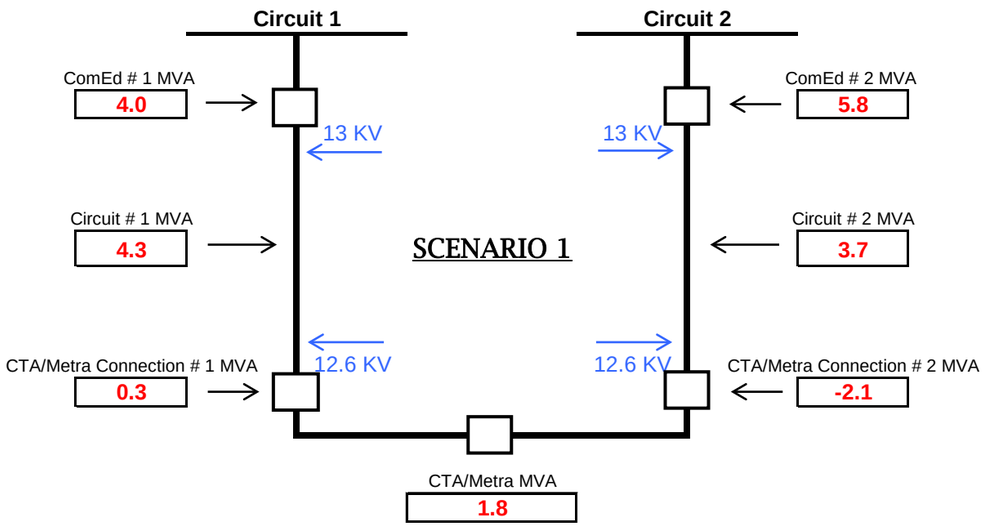

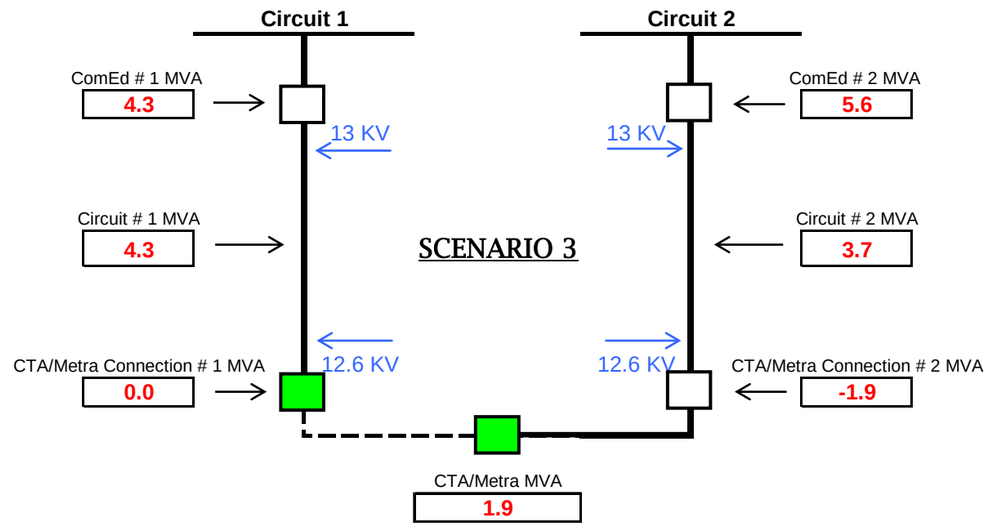

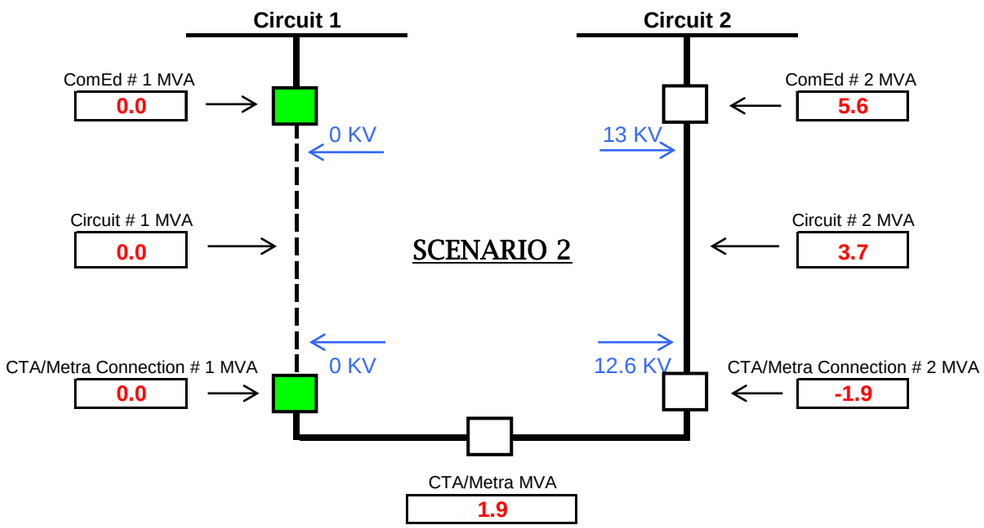

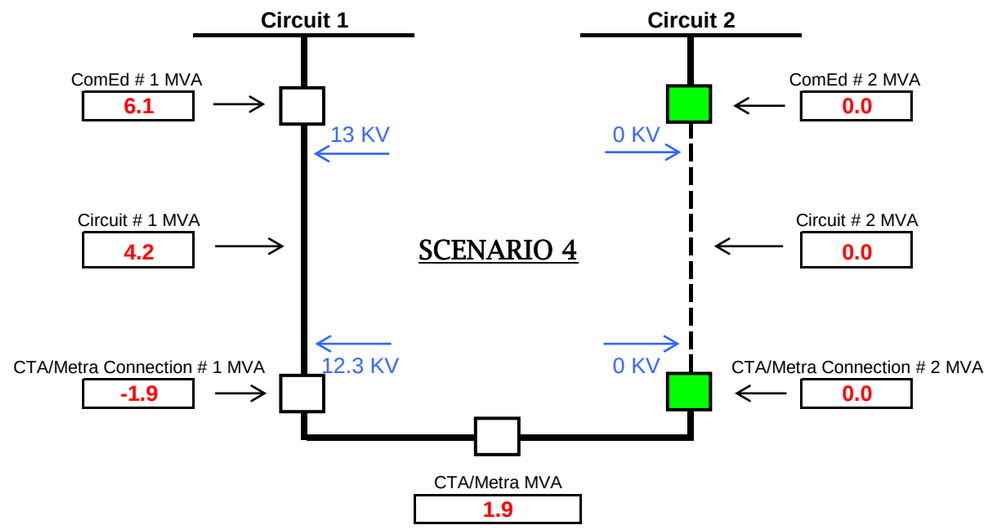

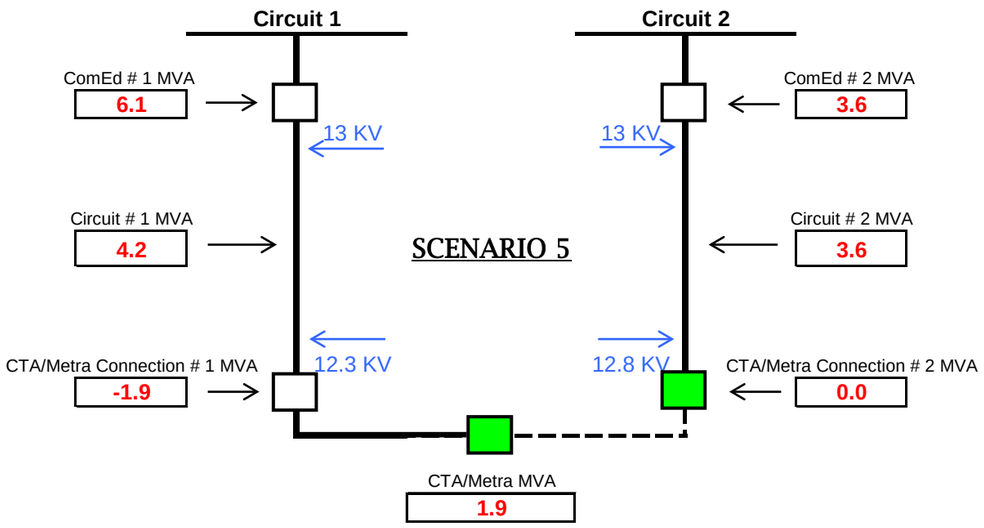
Circuit 1
Circuit 2
ComEd # 1 MVA
6.1
13 KV
13 KV
ComEd # 2 MVA
3.6
Circuit # 1 MVA
4.2
SCENARIO 5
Circuit # 2 MVA
3.6
CTA/Metra Connection # 1 MVA
-1.9
12.3 KV
12.8 KV
CTA/Metra Connection # 2 MVA
0.0
CTA/Metra MVA
1.9

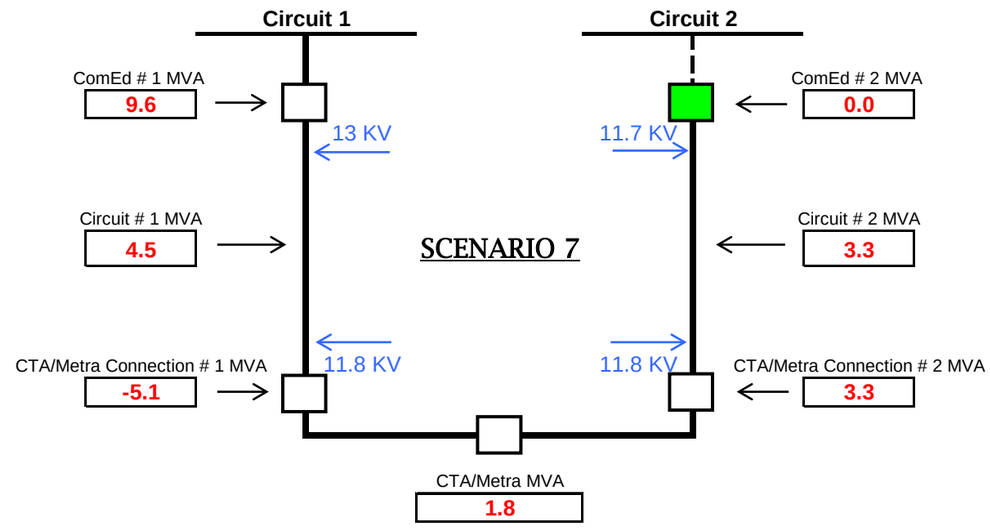
Circuit 1
Circuit 2
ComEd # 1 MVA
9.6
13 KV
11.7 KV
ComEd # 2 MVA
0.0
Circuit # 1 MVA
4.5
SCENARIO 7
Circuit # 2 MVA
3.3
CTA/Metra Connection # 1 MVA
-5.1
11.8 KV
11.8 KV
CTA/Metra Connection # 2 MVA
3.3
CTA/Metra MVA
1.8

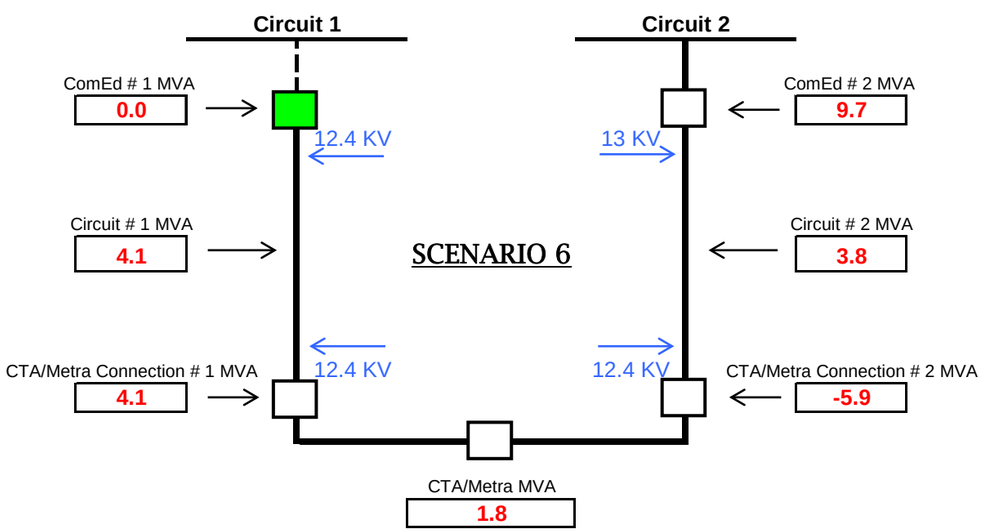
Circuit 1
Circuit 2
ComEd # 1 MVA
0.0
12.4 KV
13 KV
ComEd # 2 MVA
9.7
Circuit # 1 MVA
4.1
SCENARIO 6
Circuit # 2 MVA
3.8
CTA/Metra Connection # 1 MVA
4.1
12.4 KV
12.4 KV
CTA/Metra Connection # 2 MVA
-5.9
CTA/Metra MVA
1.8

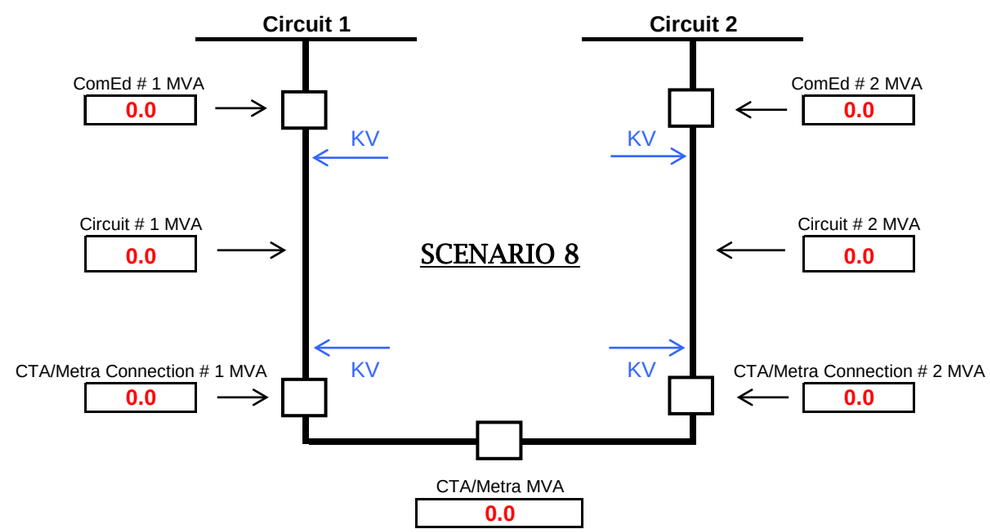
Circuit 1
Circuit 2
ComEd # 1 MVA
0.0
KV
KV
ComEd # 2 MVA
0.0
Circuit # 1 MVA
0.0
SCENARIO 8
Circuit # 2 MVA
0.0
CTA/Metra Connection # 1 MVA
0.0
KV
KV
CTA/Metra Connection # 2 MVA
0.0
CTA/Metra MVA
0.0

RR CYME Study Information

- At SWGR [redacted], [redacted], assumed load demand [redacted]kW at PF=[redacted] (From load information provided by Cedar).

- At TR [redacted], assumed load demand [redacted]kVA at PF=[redacted] (From load information provided by CIMS and Cedar).

- [redacted] APT load information used.
  - [redacted] APT selected load date: [redacted]
  - [redacted] APT actual load on [redacted]: [redacted]A ➔ [redacted]A
  - [redacted] APT WA on selected load date: [redacted]
  - [redacted] WA load: [redacted]A ➔ [redacted]A

- [redacted] APT load information used.
  - [redacted] APT selected load date: [redacted]
  - [redacted] APT actual load on [redacted]: [redacted]A ➔ [redacted]A
  - [redacted] APT WA on selected load date: [redacted]
  - [redacted] WA load: [redacted]A➔ [redacted]A

- [redacted]load allocation method
  - Validate in the CYME model all transformers, ESS loads, including [redacted]kVA for each feeding line at [redacted]per Cedar meter information.
  - Open section171318099, (i.e., assumed zero point of the network). This allowed for proper load allocation on the feeders.
  - Power factor of [redacted]% for [redacted] and [redacted]% for [redacted] were used during allocation so as to obtain an adjusted load PF of [redacted]% on all feeders.
  - Ignore motors.
  - Open zero-point section and allocate the loads.
  - Close zero-point and run analysis.

- Physical midpoint kV on feeder [redacted] is taken at section 1066145442 and the endpoint kV is taken at section 171246357.

- Physical midpoint kV on feeder [redacted] is taken at section 239741778 and the endpoint kV is taken at section 170426532.

RR- CYME Study Results

Scenario	@ CTA - Connection #1 (MVA)	@ CTA - Connection #2 (MVA)	@ ComEd - Circuit #1 (MVA)	@ ComEd - Circuit #2 (MVA)	@ CTA - Connection #1 (kV)	@ CTA - Connection #2 (kV)	@ ComEd - Circuit #1 (kV)	@ ComEd - Circuit #2 (kV)	@ ComEd - Circuit #1 Midpoint (kV)	@ ComEd - Circuit #2 Midpoint (kV)	@ ComEd - Circuit #1 Endpoint (kV)	@ ComEd - Circuit #2 Endpoint (kV)
1	0.3	-2.1	4.0	5.8	12.6	12.6	13.0	13.0	12.6	12.7	12.6	12.6
2	0.0	-1.9	0.0	5.6	0.0	12.6	0.0	13.0	0.0	12.7	0.0	12.6
3	0.0	-1.9	4.3	5.6	12.6	12.6	13.0	13.0	12.6	12.7	12.6	12.6
4	-1.9	0.0	6.1	0.0	12.3	0.0	13.0	0.0	12.5	0.0	12.3	0.0
5	-1.9	0.0	6.1	3.6	12.3	12.8	13.0	13.0	12.5	12.8	12.3	12.8
6	4.1	-5.9	0.0	9.7	12.4	12.4	12.4	13.0	12.2	12.6	12.4	12.5
7	-5.1	3.3	9.6	0.0	11.8	11.8	13.0	11.7	12.1	11.7	11.8	11.7

Scenario:

Scenario 1: @ CTA/Metra connection #1 and #2 closed, @ ComEd circuit #1 and #2 closed. This represents the normal condition.

Scenario 2: @ CTA/Metra connection #1 open and #2 closed, @ ComEd circuit #1 open and #2 closed. This represents an outage of ComEd circuit #1.

Scenario 3: @ CTA/Metra connection #1 and bus tie open and #2 closed, @ ComEd circuit #1 and #2 closed. This represents an outage of CTA/Metra Bus #1.

Scenario 4: @ CTA/Metra connection #1 closed and #2 open, @ ComEd circuit #1 closed and #2 open. This represents an outage of ComEd circuit #2.

Scenario 5: @ CTA/Metra connection #1 closed and #2 and bus tie open, @ ComEd circuit #1 and #2 closed. This represents an outage of CTA/Metra Bus #2.

Scenario 6: @ CTA/Metra connection #1 and #2 closed, @ ComEd circuit #1 open and #2 closed. This represents loss of source for ComEd circuit #1.

Scenario 7: @ CTA/Metra connection #1 and #2 closed, @ ComEd circuit #1 closed and #2 open. This represents loss of source for ComEd circuit #2.

CONFIDENTIAL AND PROPRIETARY - CEII

RR SUBSTATION

RRR CYME Study Results

Scenario	@ CTA / Metra - Connection #1 (MVA)	@ CTA / Metra - Connection #2 (MVA)	@ ComEd - Circuit #1 (MVA)	@ ComEd - Circuit #2 (MVA)	@ CTA / Metra - Connection #1 (kV)	@ CTA / Metra - Connection #2 (kV)	@ ComEd - Circuit #1 (kV)	@ ComEd - Circuit #2 (kV)
1	1.4	-2.1	3.7	2.8	12.4	12.4	12.4	12.5
2	0.0	-0.8	0.0	1.5	0.0	12.5	0.0	12.5
3	0.0	-0.8	5.0	1.5	12.4	12.5	12.4	12.5
4	-0.8	0.0	5.8	0.0	12.4	0.0	12.4	0.0
5	-0.8	0.0	5.8	0.7	12.4	12.5	12.5	12.5
6	5.0	-5.8	0.0	6.5	12.3	12.3	12.2	12.4
7	-1.5	0.7	6.5	0.0	12.3	12.3	12.4	12.3

RRR CYME Results Comparison

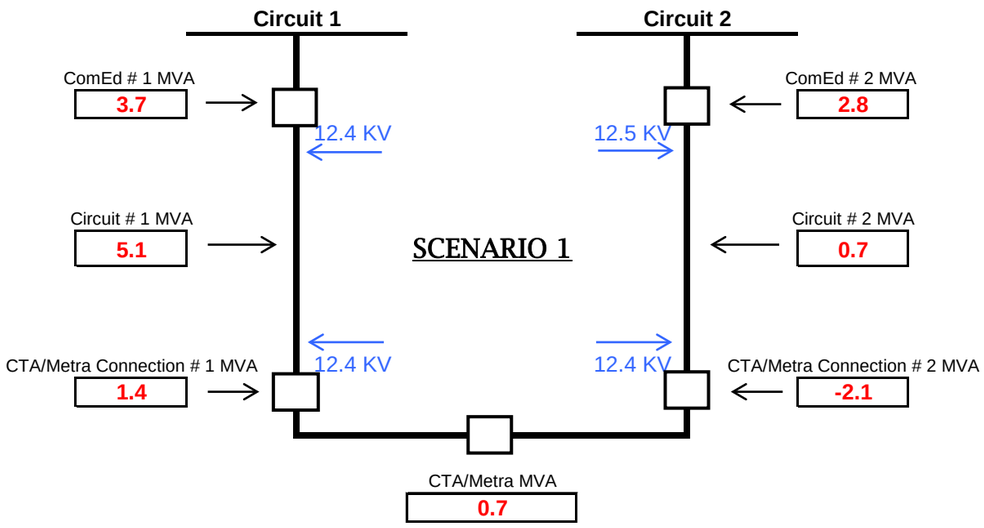

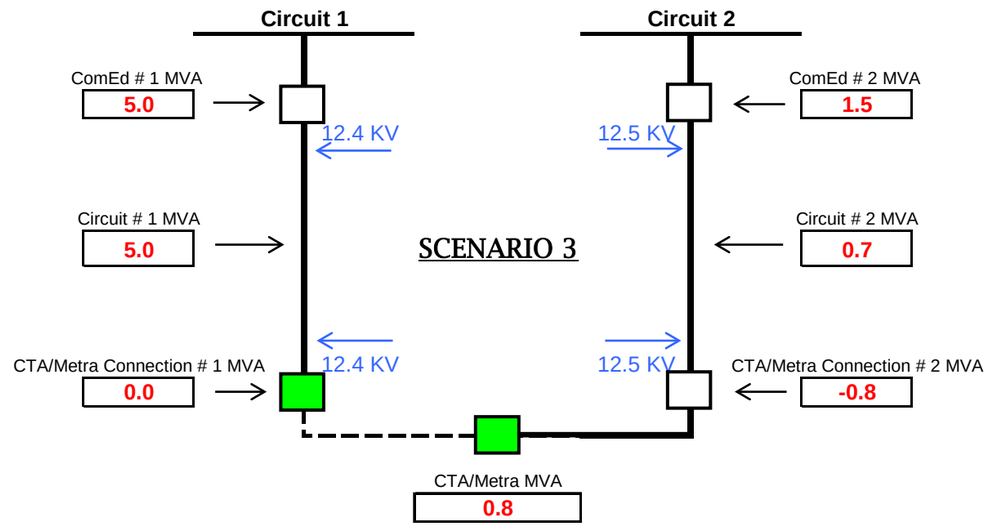

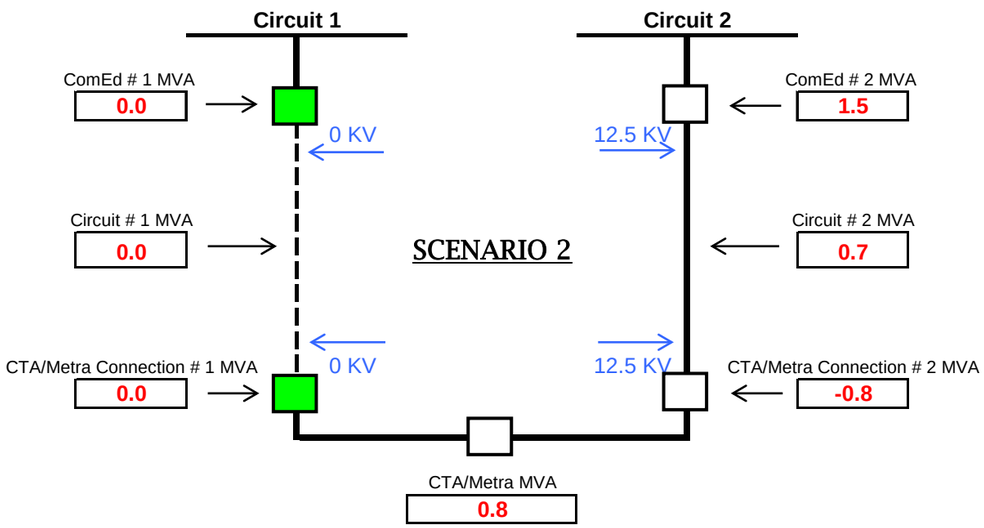

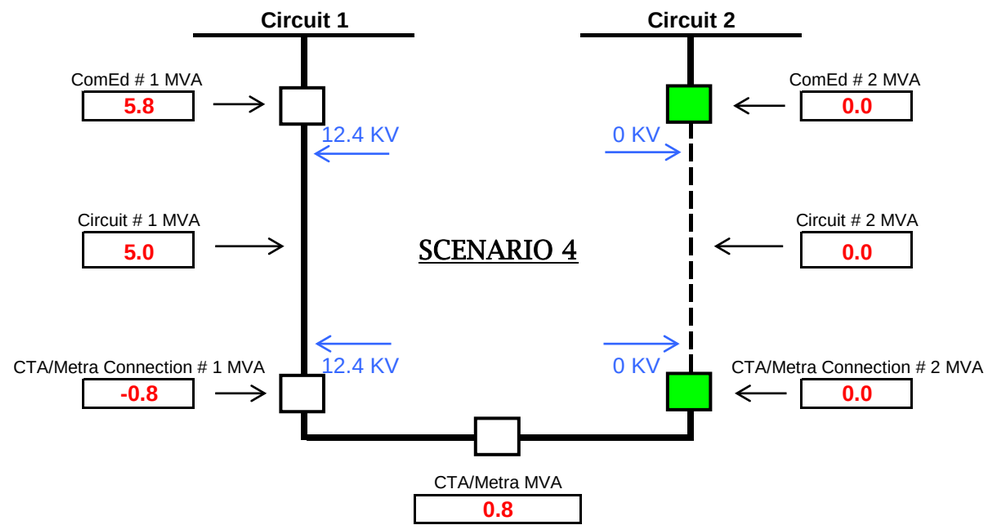

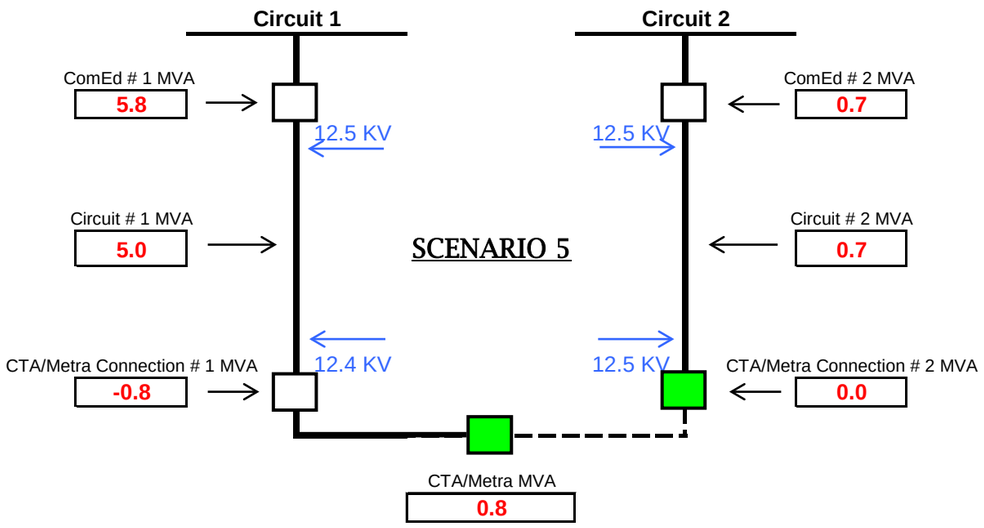
Circuit 1
Circuit 2
ComEd # 1 MVA
5.8
12.5 KV
12.5 KV
ComEd # 2 MVA
0.7
Circuit # 1 MVA
5.0
SCENARIO 5
Circuit # 2 MVA
0.7
CTA/Metra Connection # 1 MVA
-0.8
12.4 KV
12.5 KV
CTA/Metra Connection # 2 MVA
0.0
CTA/Metra MVA
0.8

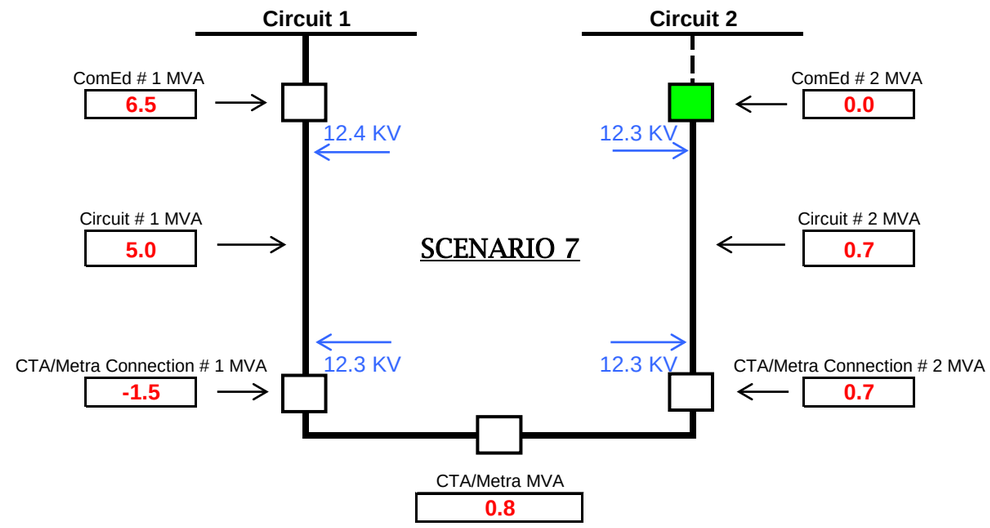
Circuit 1
Circuit 2
ComEd # 1 MVA
6.5
12.4 KV
12.3 KV
ComEd # 2 MVA
0.0
Circuit # 1 MVA
5.0
SCENARIO 7
Circuit # 2 MVA
0.7
CTA/Metra Connection # 1 MVA
-1.5
12.3 KV
12.3 KV
CTA/Metra Connection # 2 MVA
0.7
CTA/Metra MVA
0.8

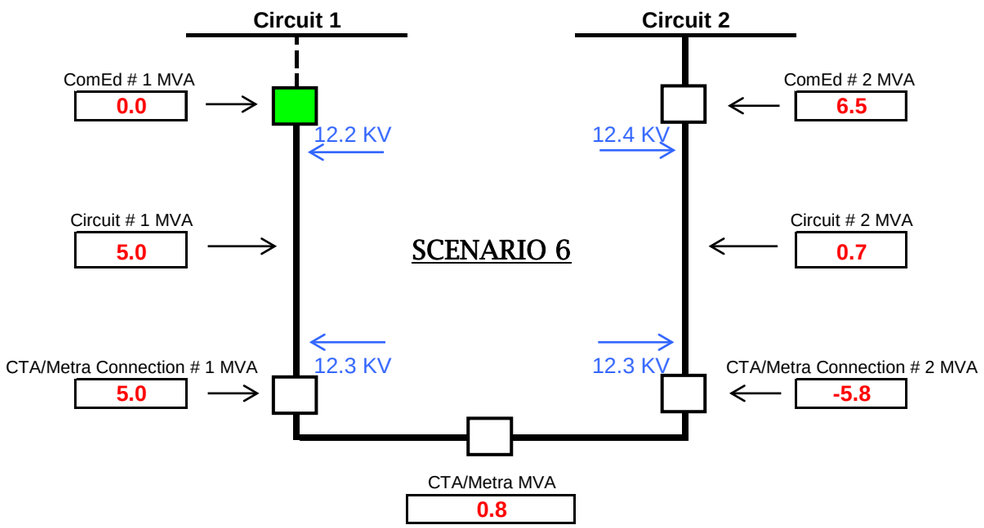
Circuit 1
Circuit 2
ComEd # 1 MVA
0.0
12.2 KV
12.4 KV
ComEd # 2 MVA
6.5
Circuit # 1 MVA
5.0
SCENARIO 6
Circuit # 2 MVA
0.7
CTA/Metra Connection # 1 MVA
5.0
12.3 KV
12.3 KV
CTA/Metra Connection # 2 MVA
-5.8
CTA/Metra MVA
0.8

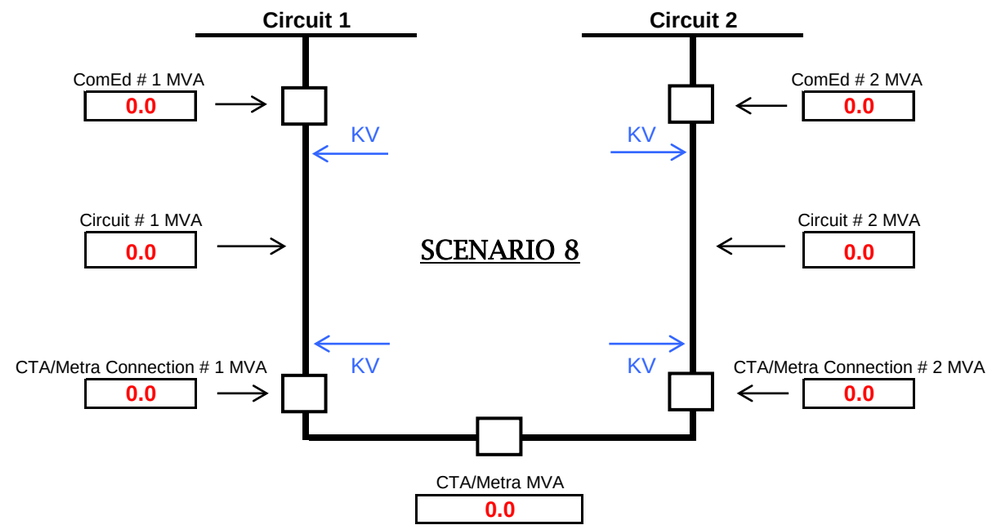
Circuit 1
Circuit 2
ComEd # 1 MVA
0.0
KV
KV
ComEd # 2 MVA
0.0
Circuit # 1 MVA
0.0
SCENARIO 8
Circuit # 2 MVA
0.0
CTA/Metra Connection # 1 MVA
0.0
KV
KV
CTA/Metra Connection # 2 MVA
0.0
CTA/Metra MVA
0.0

RRR CYME Study Information

- Following load demand for [redacted], [redacted], assumed at PF=[redacted] (From load information provided by APT- ATO info).
  - [redacted] Bus #1 = [redacted] KW

- [redacted] ([redacted]) substation load was obtained from Cedar Loads. Peak load for each feeding line is [redacted] KVA with assumed PF=[redacted].

- [redacted] APT load information used.
  - [redacted] APT selected load date: [redacted]
  - [redacted] APT actual load on [redacted]: [redacted] A ➔ [redacted] A
  - [redacted] APT WA on selected load date: [redacted]
  - [redacted] WA load: [redacted] A ➔ [redacted] A

- [redacted] APT load information used.
  - [redacted] APT selected load date: [redacted]
  - [redacted] APT actual load on [redacted]: [redacted] A ➔ [redacted] A
  - [redacted] APT WA on selected load date: [redacted]
  - [redacted] WA load: [redacted] A ➔ [redacted] A

- [redacted] load allocation method
  - Validate in the CYME model all transformers, ESS loads, including [redacted] KVA for each feeding line at [redacted] per Cedar meter information.
  - Enter wa feeder loads manually: **for** [redacted] **and for** [redacted]
  - Power factor of [redacted] % for [redacted] and [redacted] % for [redacted] ,
  - Ignore motors.

- Physical midpoint on feeder [redacted] is taken at cable section # 188132484 and the endpoint is taken at cable section # 188132547 last overhead span.

- Physical midpoint on feeder [redacted] is taken at cable section # 1019576904 and the endpoint is taken at cable section # 402527186 outside [redacted].

RRR- CYME Study Results

Scenario	@ CTA - Connection #1 (MVA)	@ CTA - Connection #2 (MVA)	@ ComEd - Circuit #1 (MVA)	@ ComEd - Circuit #2 (MVA)	@ CTA - Connection #1 (kV)	@ CTA - Connection #2 (kV)	@ ComEd - Circuit #1 (kV)	@ ComEd - Circuit #2 (kV)	@ ComEd - Circuit #1 Midpoint (kV)	@ ComEd - Circuit #2 Midpoint (kV)	@ ComEd - Circuit #1 Endpoint (kV)	@ ComEd - Circuit #2 Endpoint (kV)
1	1.4	-2.1	3.7	2.8	12.4	12.4	12.4	12.5	12.4	12.4	12.4	12.4
2	0.0	-0.8	0.0	1.5	0.0	12.5	0.0	12.5	0.0	12.5	0.0	12.5
3	0.0	-0.8	5.0	1.5	12.4	12.5	12.4	12.5	12.4	12.5	12.4	12.5
4	-0.8	0.0	5.8	0.0	12.4	0.0	12.4	0.0	12.4	0.0	12.3	0.0
5	-0.8	0.0	5.8	0.7	12.4	12.5	12.5	12.5	12.4	12.5	12.3	12.5
6	5.0	-5.8	0.0	6.5	12.3	12.3	12.2	12.4	12.2	12.3	12.2	12.3
7	-1.5	0.7	6.5	0.0	12.3	12.3	12.4	12.3	12.4	12.3	12.3	12.3

Scenario:

Scenario 1: @ CTA connection #1 and #2 closed, @ ComEd circuit #1 and #2 closed. This represents the normal condition.

Scenario 2: @ CTA connection #1 open and #2 closed, @ ComEd circuit #1 open and #2 closed. This represents an outage of ComEd circuit #1.

Scenario 3: @ CTA connection #1 and bus tie open and #2 closed, @ ComEd circuit #1 and #2 closed. This represents an outage of CTA Bus #1.

Scenario 4: @ CTA connection #1 closed and #2 open, @ ComEd circuit #1 closed and #2 open. This represents an outage of ComEd circuit #2.

Scenario 5: @ CTA connection #1 closed and #2 and bus tie open, @ ComEd circuit #1 and #2 closed. This represents an outage of CTA Bus #2.

Scenario 6: @ CTA connection #1 and #2 closed, @ ComEd circuit #1 open and #2 closed. This represents loss of source for ComEd circuit #1.

Scenario 7: @ CTA connection #1 and #2 closed, @ ComEd circuit #1 closed and #2 open. This represents loss of source for ComEd circuit #2.

CONFIDENTIAL AND PROPRIETARY - CEII

RRR - SUBSTATION

S CYME Study Results

Scenario	@ CTA / Metra -Connection #1 (MVA)	@ CTA / Metra - Connection #2 (MVA)	@ ComEd - Circuit #1 (MVA)	@ ComEd - Circuit #2 (MVA)	@ ComEd - Circuit #3 (MVA)	@ CTA / Metra - Connection #1 (kV)	@ CTA / Metra - Connection #2 (kV)	@ ComEd - Circuit #1 (kV)	@ ComEd - Circuit #2 (kV)	@ ComEd - Circuit #3 (kV)
1	-5.6	4.5	5.7	5.7	5.8	12.6	12.6	12.9	12.9	12.9
2	0.0	-1.1	0.0	9.1	8.4	0.0	12.3	0.0	12.8	12.8
3	0.0	-1.1	0.0	9.1	8.4	13.0	12.3	13.0	12.8	12.8
4	-8.0	6.9	8.2	0.0	8.1	12.5	12.5	12.8	0.0	12.8
5	-1.1	0.0	1.1	8.4	7.8	12.9	12.3	13.0	12.8	12.8
6	-5.7	4.6	5.8	5.8	0.0	12.6	12.6	12.9	12.9	0.0
7	0.0	-1.1	0.0	9.1	8.4	12.3	12.3	12.3	12.8	12.8
8	-8.6	7.5	8.8	0.0	8.6	12.4	12.4	12.8	12.3	12.8
9	-8.3	7.2	8.5	9.0	0.0	12.5	12.5	12.8	12.8	12.2
10	-1.1	0.0	1.1	8.4	7.8	12.9	0.0	13.0	12.8	12.8

S Cyme Results Comparison

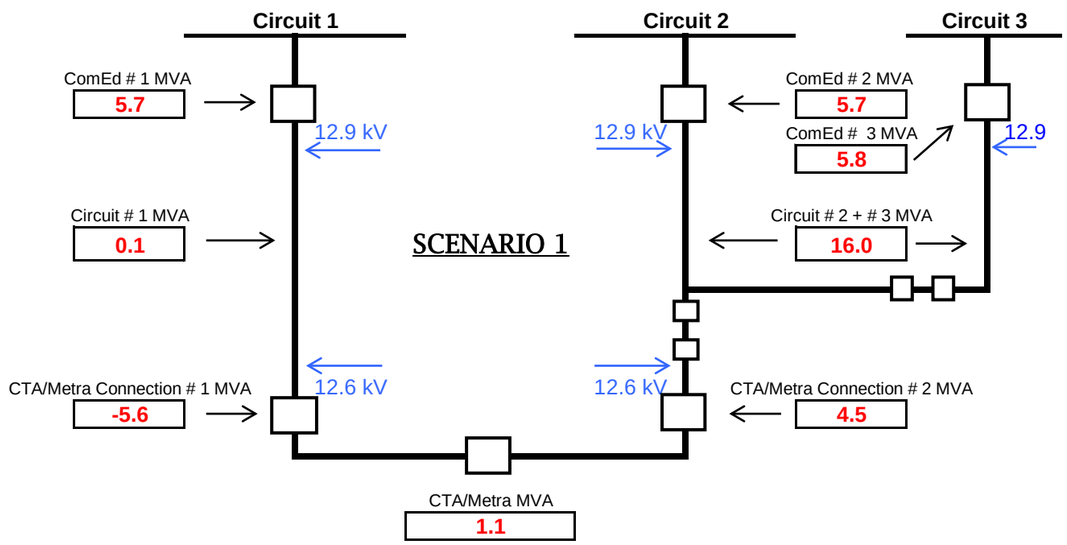

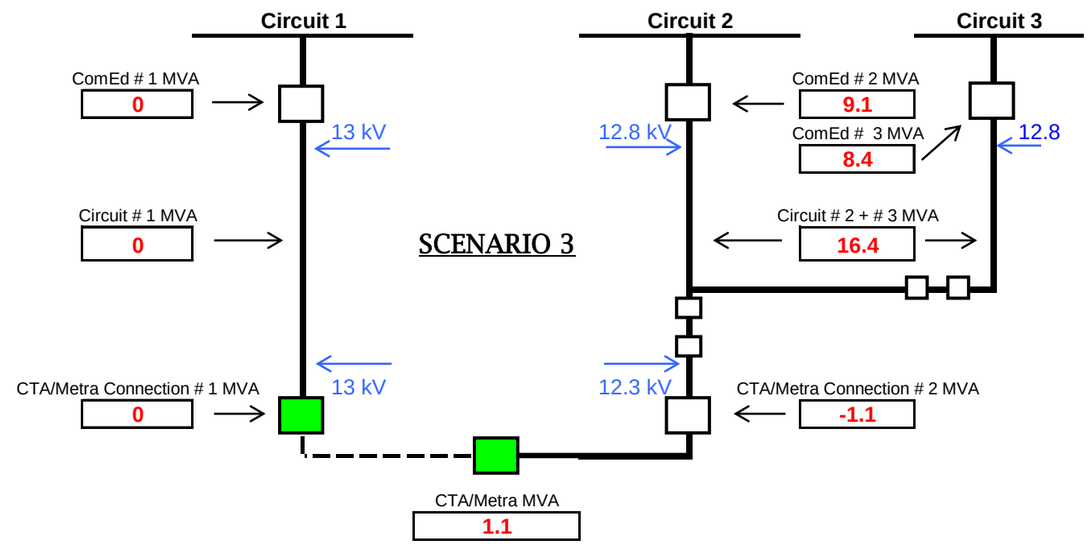

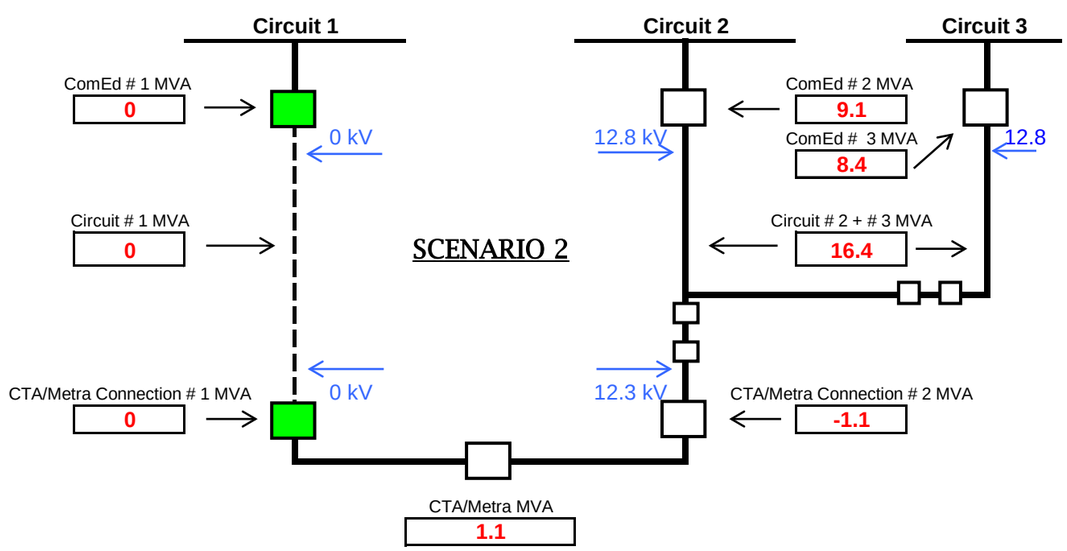

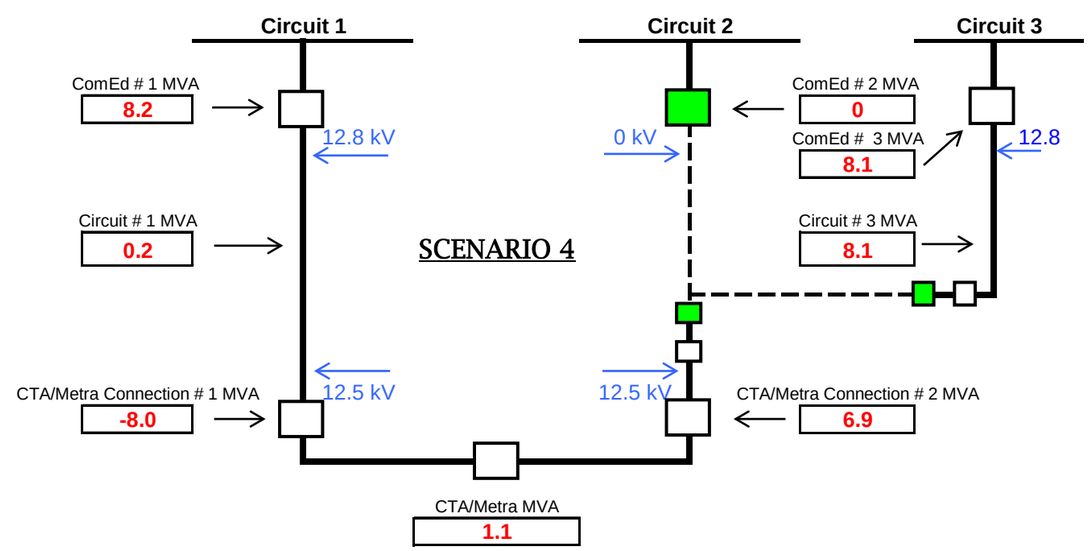

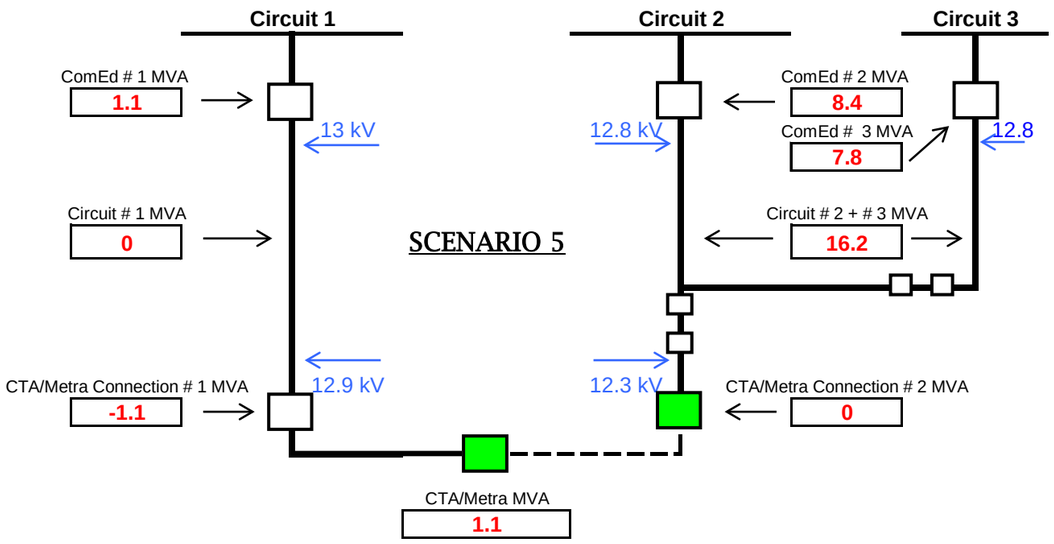
Circuit 1
Circuit 2
Circuit 3
ComEd # 1 MVA
1.1
13 kV
12.8 kV
ComEd # 2 MVA
8.4
ComEd # 3 MVA
7.8
12.8
Circuit # 1 MVA
0
SCENARIO 5
Circuit # 2 + # 3 MVA
16.2
CTA/Metra Connection # 1 MVA
-1.1
12.9 kV
12.3 kV
CTA/Metra Connection # 2 MVA
0
CTA/Metra MVA
1.1

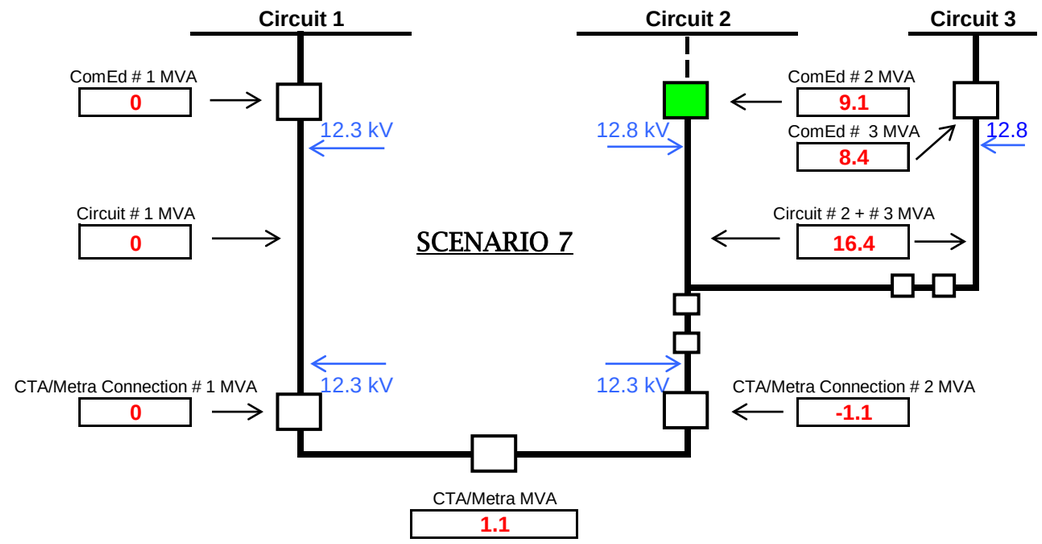
Circuit 1
Circuit 2
Circuit 3
ComEd # 1 MVA
0
12.3 kV
12.8 kV
ComEd # 2 MVA
9.1
ComEd # 3 MVA
8.4
12.8
Circuit # 1 MVA
0
SCENARIO 7
Circuit # 2 + # 3 MVA
16.4
CTA/Metra Connection # 1 MVA
0
12.3 kV
12.3 kV
CTA/Metra Connection # 2 MVA
-1.1
CTA/Metra MVA
1.1

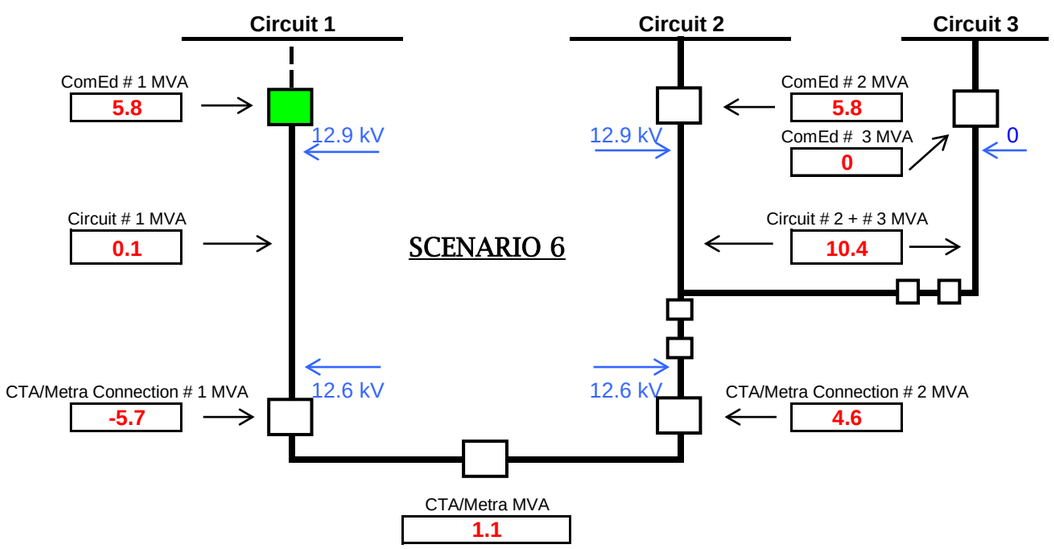
Circuit 1
Circuit 2
Circuit 3
ComEd # 1 MVA
5.8
12.9 kV
12.9 kV
ComEd # 2 MVA
5.8
ComEd # 3 MVA
0
0
Circuit # 1 MVA
0.1
SCENARIO 6
Circuit # 2 + # 3 MVA
10.4
CTA/Metra Connection # 1 MVA
-5.7
12.6 kV
12.6 kV
CTA/Metra Connection # 2 MVA
4.6
CTA/Metra MVA
1.1

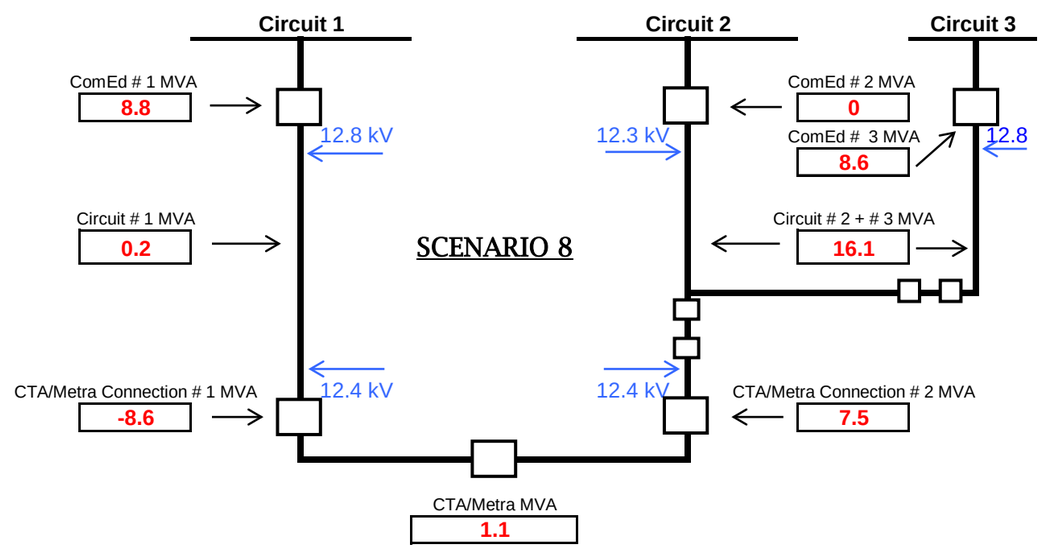
Circuit 1
Circuit 2
Circuit 3
ComEd # 1 MVA
8.8
12.8 kV
12.3 kV
ComEd # 2 MVA
0
ComEd # 3 MVA
8.6
12.8
Circuit # 1 MVA
0.2
SCENARIO 8
Circuit # 2 + # 3 MVA
16.1
CTA/Metra Connection # 1 MVA
-8.6
12.4 kV
12.4 kV
CTA/Metra Connection # 2 MVA
7.5
CTA/Metra MVA
1.1

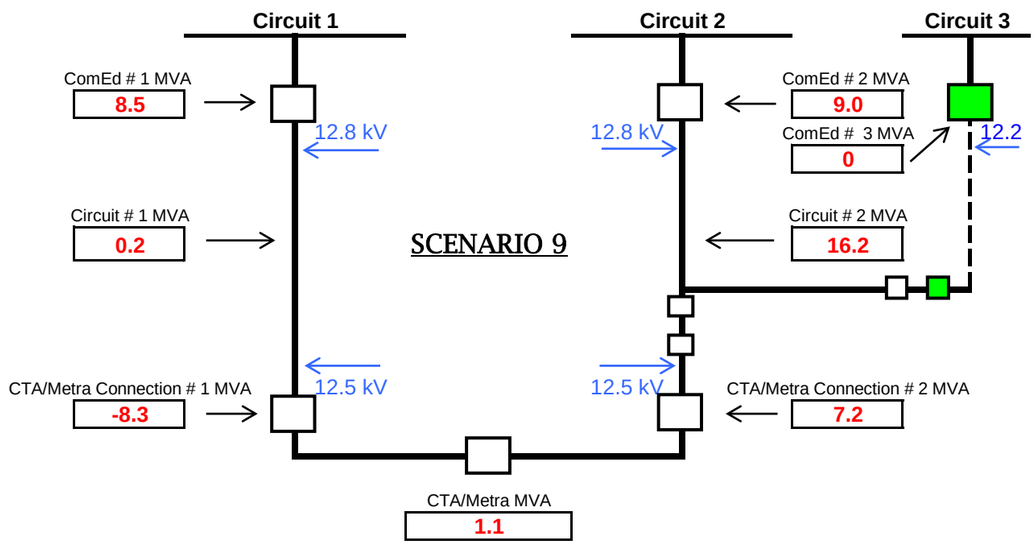
Circuit 1
Circuit 2
Circuit 3
ComEd # 1 MVA
8.5
12.8 kV
12.8 kV
ComEd # 2 MVA
9.0
ComEd # 3 MVA
0
12.2
Circuit # 1 MVA
0.2
SCENARIO 9
Circuit # 2 MVA
16.2
CTA/Metra Connection # 1 MVA
-8.3
12.5 kV
12.5 kV
CTA/Metra Connection # 2 MVA
7.2
CTA/Metra MVA
1.1

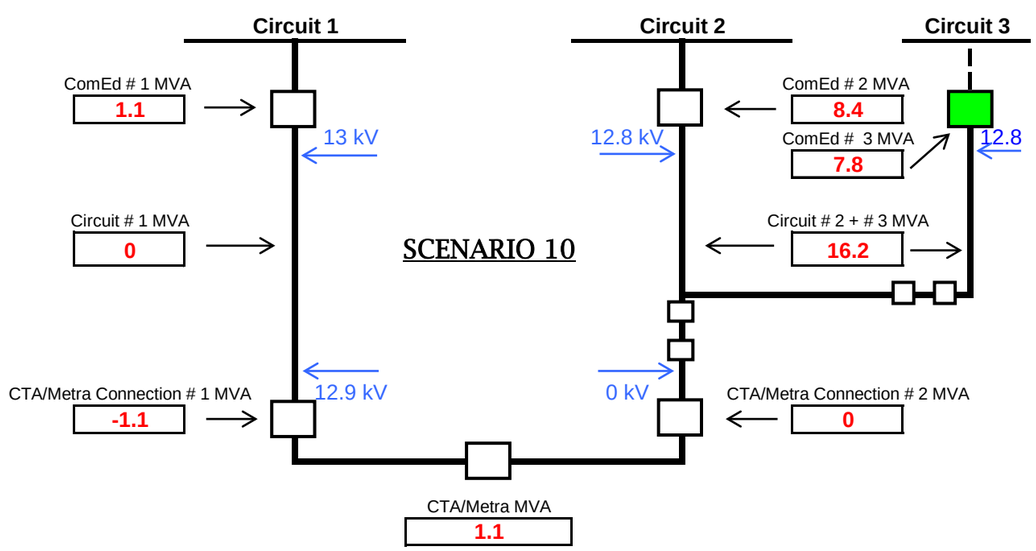
Circuit 1
Circuit 2
Circuit 3
ComEd # 1 MVA
1.1
13 kV
12.8 kV
ComEd # 2 MVA
8.4
ComEd # 3 MVA
7.8
12.8
Circuit # 1 MVA
0
SCENARIO 10
Circuit # 2 + # 3 MVA
16.2
CTA/Metra Connection # 1 MVA
-1.1
12.9 kV
0 kV
CTA/Metra Connection # 2 MVA
0
CTA/Metra MVA
1.1

S CYME Study Information

- [redacted] – [redacted] KVA nameplate transformer , assumed load [redacted] of nameplate, [redacted]
- [redacted] load was obtained from [redacted] via customer [redacted].
- [redacted] Load was obtained from CIMS for -[redacted] via customer [redacted] Account number [redacted] with [redacted] on each line feeding this [redacted].
- [redacted] substation load was obtained from CEDAR load information. Peak load for each feeding line is [redacted] KVA with assumed PF=[redacted]

- [redacted] APT load information used.
  - [redacted] APT selected load date: [redacted]
  - [redacted] APT actual load on [redacted]
  - [redacted] APT WA on selected load date: [redacted]
  - [redacted] WA load: [redacted]
- [redacted] APT load information used.
  - [redacted] APT selected load date: [redacted]
  - [redacted] APT actual load on [redacted]
  - [redacted] APT WA on selected load date: [redacted]
  - [redacted] WA load: [redacted]
- [redacted] APT load information used.
  - [redacted] APT selected load date: [redacted]
  - [redacted] APT actual load on [redacted]
  - [redacted] APT WA on selected load date: [redacted]
  - [redacted] WA load: [redacted]

- [redacted] allocation method
  - Validate in the CYME model all transformers, ESS loads, including [redacted] for each feeding line at -[redacted] per CEDAR
  - Inside the [redacted] was identified as the zero point supporting [redacted] to loads on the [redacted] feeder network .Inside [redacted] was identified as the zero point for proper load allocation.
  - Enter feeder loads [redacted]
  - Ignore motors
  - Open bus breaker [redacted] and allocate the loads.
  - Adjust pf at source [redacted] and allocate to obtain an adjusted load PF of [redacted] on feeders [redacted]
  - Close zero-point switches and run analysis.

- [redacted] midpoint KV taken at cable section 388002261 and endpoint KV taken at section before the [redacted]
- [redacted] midpoint KV taken at cable section 388003177 and endpoint KV taken at section before the [redacted]
- [redacted] midpoint KV taken at cable section 387974147 and endpoint KV taken at overhead section 364046937.

S CYME Study Results

Scenario	@ Metra -Connection #1 (MVA)	@ Metra - Connection #2 (MVA)	@ ComEd - Circuit #1 (MVA)	@ ComEd - Circuit #2 (MVA)	@ ComEd - Circuit #3 (MVA)	@ Metra -Connection #1 (kV)	@ Metra - Connection #2 (kV)	@ ComEd - Circuit #1 (kV)	@ ComEd - Circuit #2 (kV)	@ ComEd - Circuit #3 (kV)	@ ComEd - Circuit #1 Midpoint (kV)	@ ComEd - Circuit #2 Midpoint (kV)	@ ComEd - Circuit #3 Midpoint (kV)	@ ComEd - Circuit #1 Endpoint (kV)	@ ComEd - Circuit #2 Endpoint (kV)	@ ComEd - Circuit #3 Endpoin (kV)
1	-5.6	4.5	5.7	5.7	5.8	12.6	12.6	12.9	12.9	12.9	12.8	12.7	12.6	12.6	12.6	12.5
2	0.0	-1.1	0.0	9.1	8.4	0.0	12.3	0.0	12.8	12.8	0.0	12.5	12.5	0.0	12.3	12.3
3	0.0	-1.1	0.0	9.1	8.4	13.0	12.3	13.0	12.8	12.8	13.0	12.5	12.5	13.0	12.3	12.3
4	-8.0	6.9	8.2	0.0	8.1	12.5	12.5	12.8	0.0	12.8	12.6	0.0	12.5	12.5	0.0	12.3
5	-1.1	0.0	1.1	8.4	7.8	12.9	12.3	13.0	12.8	12.8	13.0	12.6	12.5	12.9	12.3	12.3
6	-5.7	4.6	5.8	5.8	0.0	12.6	12.6	12.9	12.9	0.0	12.8	12.7	0.0	12.6	12.6	0.0
7	0.0	-1.1	0.0	9.1	8.4	12.3	12.3	12.3	12.8	12.8	12.3	12.5	12.5	12.3	12.3	12.3
8	-8.6	7.5	8.8	0.0	8.6	12.4	12.4	12.8	12.3	12.8	12.6	12.3	12.5	12.4	12.4	12.3
9	-8.3	7.2	8.5	9.0	0.0	12.5	12.5	12.8	12.8	12.2	12.6	12.5	12.2	12.5	12.4	12.1
10	-1.1	0.0	1.1	8.4	7.8	12.9	0.0	13.0	12.8	12.8	13.0	12.6	12.5	12.9	12.3	12.3

Scenario:

Scenario 1: @ CTA/Metra connection #1 and #2 closed, @ ComEd circuit #1, #2 and #3 closed. This represents the normal condition.

Scenario 2: @ CTA/Metra connection #1 open and #2 closed, @ ComEd circuit #1 open; #2 and #3 closed. This represents an outage of ComEd circuit #1.

Scenario 3: @ CTA/Metra connection #1 and bus tie open and #2 closed, @ ComEd circuit #1, #2 and #3 closed. This represents an outage of CTA/Metra Bus #1.

Scenario 4: @ CTA/Metra connection #1 and #2 closed, @ ComEd circuit #1 and #3 closed; #2 open, @[redacted] open, @ [redacted] open. This represents an outage of ComEd circuit #2.

Scenario 5: @ CTA/Metra connection #1 closed and #2 and bus tie open, @ ComEd circuit #1, #2 and #3 closed. This represents an outage of CTA/Metra Bus #2.

Scenario 6: @ CTA/Metra connection #1 and #2 closed, @ ComEd circuit #1 and #2 closed; #3 open, @ [redacted] open. This represents an outage of ComEd circuit #3.

Scenario 7: @ CTA/Metra connection #1 and #2 closed, @ ComEd circuit #1 open; #2 and #3 closed. This represents loss of source for ComEd circuit #1.

Scenario 8: @ CTA/Metra connection #1 and #2 closed, @ ComEd circuit #1 and #3 closed; #2 open. This represents loss of source for ComEd circuit #2.

Scenario 9: @ CTA/Metra connection #1 and #2 closed, @ ComEd circuit #1 and #2 closed; #3 open. This represents loss of source for ComEd circuit #3.

Scenario 10: @ CTA/Metra connection #1 closed and #2 open, @ ComEd circuit #1, #2, and #3 closed. @ [redacted] open. This represents a loss of cable between [redacted].

CONFIDENTIAL AND PROPRIETARY - CEII

S SUBSTATION

SS CYME Study Results

Scenario	@ CTA / Metra -Connection #1 (MVA)	@ CTA / Metra - Connection #2 (MVA)	@ ComEd - Circuit #1 (MVA)	@ ComEd - Circuit #2 (MVA)	@ CTA / Metra - Connection #1 (kV)	@ CTA / Metra - Connection #2 (kV)	@ ComEd - Circuit #1 (kV)	@ ComEd - Circuit #2 (kV)
1	-2.3	0.3	4.6	5.4	12.4	12.4	12.5	12.5
2	0	-2.1	0	7.8	0	12.3	0	12.4
3	0	-2.1	2.4	7.8	12.5	12.3	12.5	12.4
4	-2.1	0	4.3	0	12.4	0	12.5	0
5	-2.1	0	4.3	5.6	12.4	12.4	12.5	12.5
6	2.4	-4.3	0	10.0	12.3	12.3	12.3	12.5
7	-7.7	5.6	10.1	0	12.2	12.2	12.5	12.2
8								

SS CYME Results Comparison

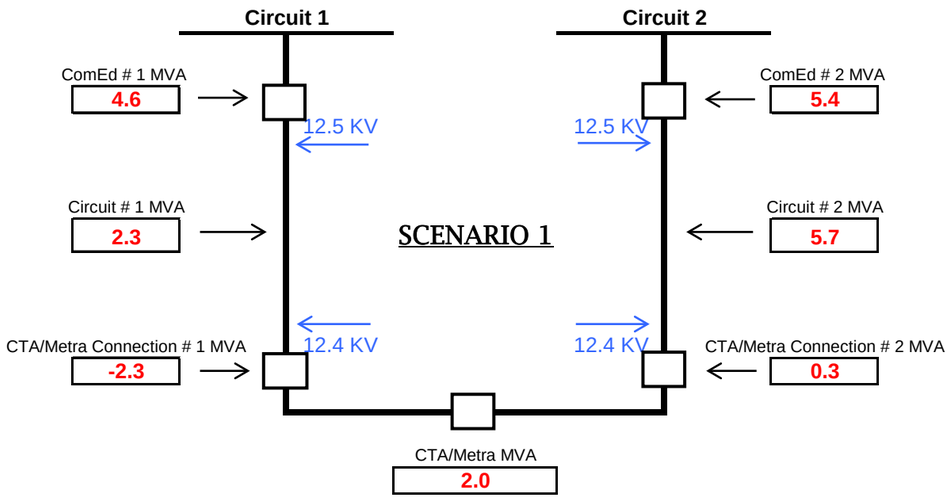

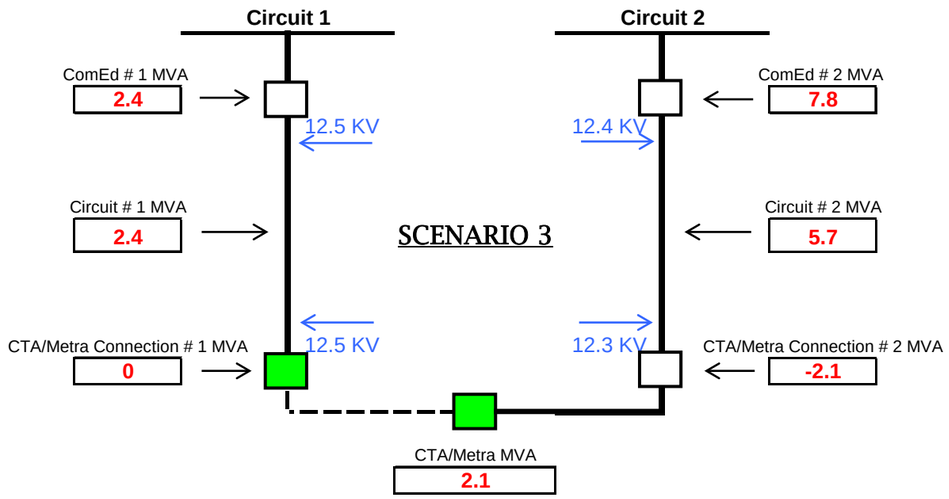

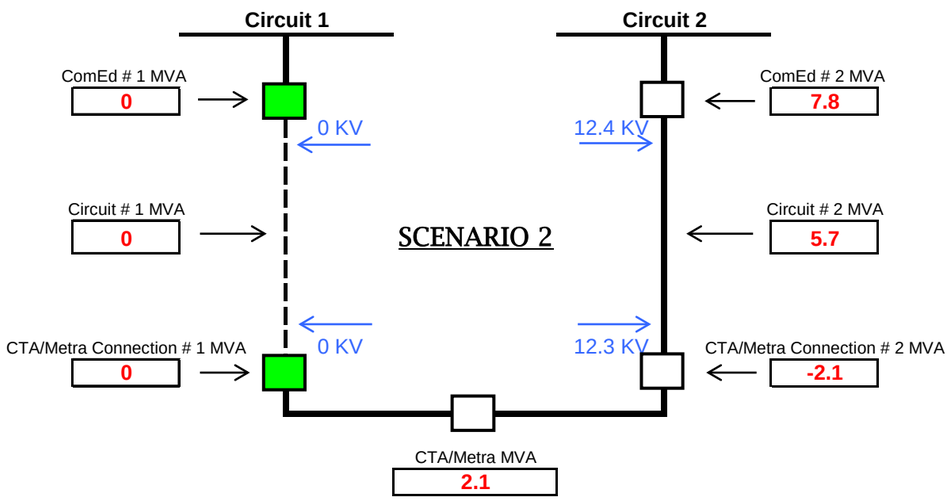

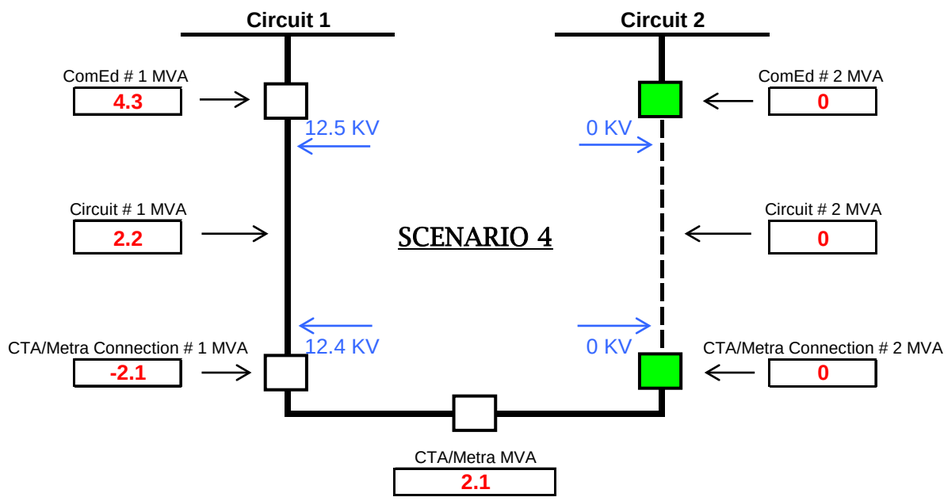

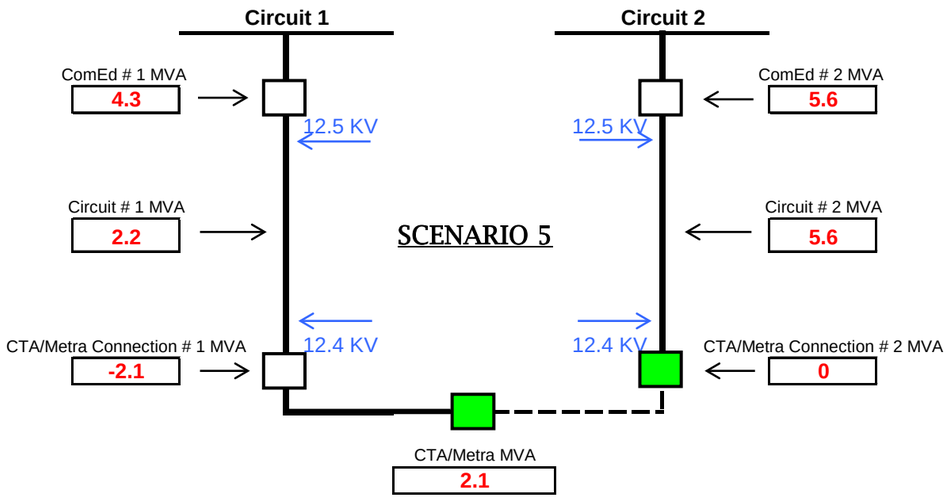
Circuit 1
Circuit 2
ComEd # 1 MVA
4.3
ComEd # 2 MVA
5.6
12.5 KV
12.5 KV
Circuit # 1 MVA
2.2
SCENARIO 5
Circuit # 2 MVA
5.6
CTA/Metra Connection # 1 MVA
-2.1
12.4 KV
12.4 KV
CTA/Metra Connection # 2 MVA
0
CTA/Metra MVA
2.1

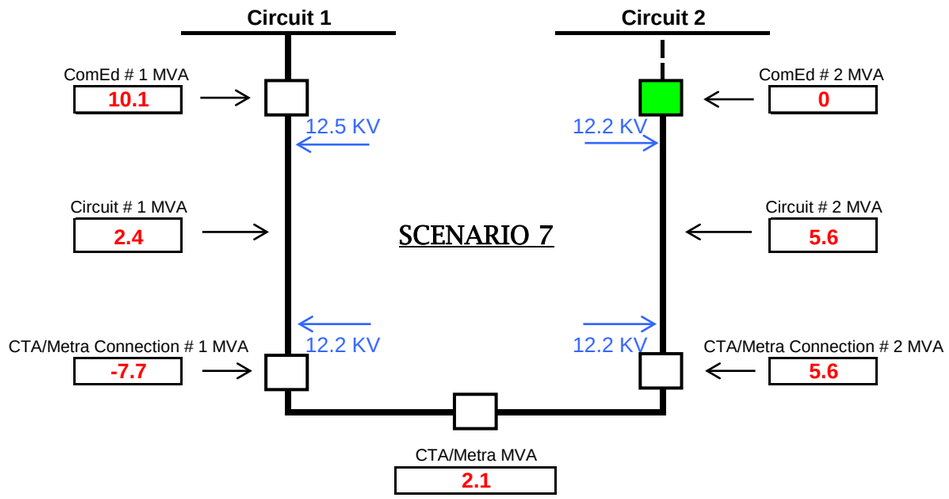
Circuit 1
Circuit 2
ComEd # 1 MVA
10.1
ComEd # 2 MVA
0
12.5 KV
12.2 KV
Circuit # 1 MVA
2.4
SCENARIO 7
Circuit # 2 MVA
5.6
CTA/Metra Connection # 1 MVA
-7.7
12.2 KV
12.2 KV
CTA/Metra Connection # 2 MVA
5.6
CTA/Metra MVA
2.1

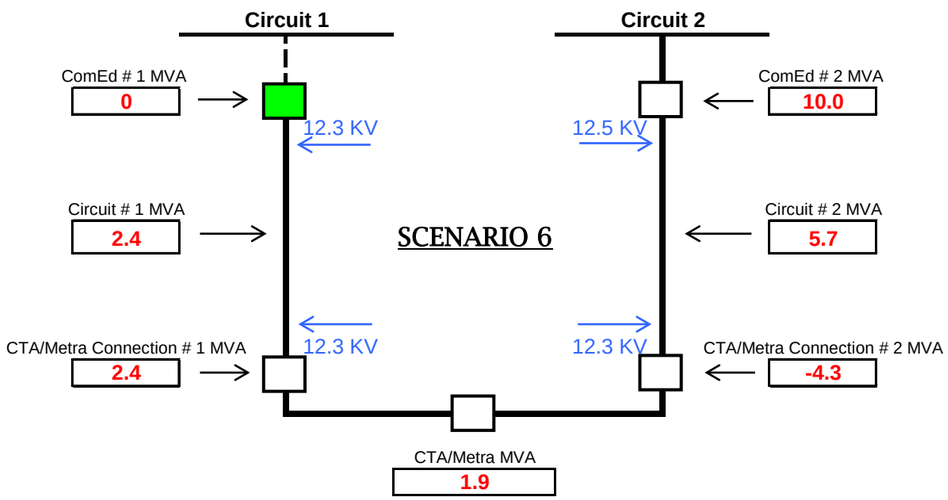
Circuit 1
Circuit 2
ComEd # 1 MVA
0
ComEd # 2 MVA
10.0
12.3 KV
12.5 KV
Circuit # 1 MVA
2.4
SCENARIO 6
Circuit # 2 MVA
5.7
CTA/Metra Connection # 1 MVA
2.4
12.3 KV
12.3 KV
CTA/Metra Connection # 2 MVA
-4.3
CTA/Metra MVA
1.9

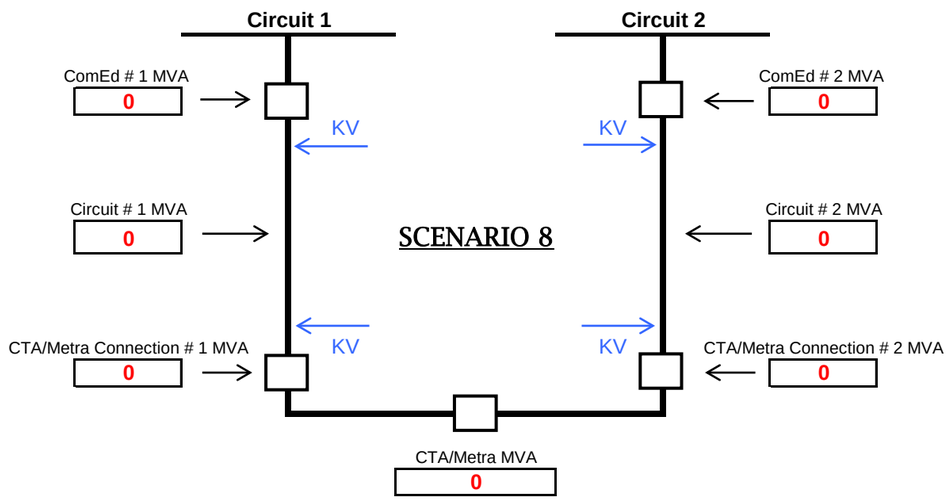
Circuit 1
Circuit 2
ComEd # 1 MVA
0
ComEd # 2 MVA
0
KV
KV
Circuit # 1 MVA
0
SCENARIO 8
Circuit # 2 MVA
0
CTA/Metra Connection # 1 MVA
0
KV
KV
CTA/Metra Connection # 2 MVA
0
CTA/Metra MVA
0

SS CYME Study Information

- [redacted] substation load obtained from CEDAR for [redacted] ([redacted]KW with [redacted]pf for each line).

- [redacted]ohm inductors added to both lines.

- [redacted] APT load information used.
  - [redacted] APT selected load date: [redacted].
  - [redacted] APT actual load on [redacted]: [redacted]A
  - [redacted] APT WA on selected load date: [redacted]
  - [redacted] WA load: [redacted]A

- [redacted] APT load information used.
  - [redacted] APT selected load date: [redacted].
  - [redacted] APT actual load on [redacted]: [redacted]A
  - [redacted] APT WA on selected load date: [redacted]
  - [redacted] WA load: [redacted]A

- [redacted] load allocation method
  - Open [redacted] breaker at [redacted] substation.
  - Allocate [redacted]A ([redacted]A plus [redacted]A) on [redacted] with [redacted]pf.
  - Allocate [redacted]A ([redacted]A minus [redacted]A) on [redacted] with [redacted]pf.
  - [redacted]A is the [redacted]A of flow from [redacted] with [redacted] WA at the zero point prior to radial load allocation.
  - Ignore motors.
  - Close [redacted] breaker at [redacted] substation and run analysis.

- [redacted] midpoint KV taken at cable section 1034470683 and endpoint KV taken at overhead section 189042524.

- [redacted] midpoint KV taken at cable section 488098919 and endpoint KV taken at cable section 1055555252-1.

SS CYME Study Results

Scenario	@ CTA -Connection #1 (MVA)	@ CTA - Connection #2 (MVA)	@ ComEd - Circuit #1 (MVA)	@ ComEd - Circuit #2 (MVA)	@ CTA -Connection #1 (kV)	@ CTA - Connection #2 (kV)	@ ComEd - Circuit #1 (kV)	@ ComEd - Circuit #2 (kV)	@ ComEd - Circuit #1 Midpoint (kV)	@ ComEd - Circuit #2 Midpoint (kV)	@ ComEd - Circuit #1 Endpoint (kV)	@ ComEd - Circuit #2 Endpoint (kV)
1	-2.3	+0.3	+4.6	+5.4	12.4	12.4	12.5	12.5	12.4	12.4	12.4	12.3
2	0	-2.1	0	+7.8	0	12.3	0	12.4	0	12.3	0	12.2
3	0	-2.1	+2.4	+7.8	12.5	12.3	12.5	12.4	12.5	12.3	12.5	12.2
4	-2.1	0	+4.3	0	12.4	0	12.5	0	12.4	0	12.4	0
5	-2.1	0	+4.3	+5.6	12.4	12.4	12.5	12.5	12.4	12.4	12.4	12.3
6	+2.4	-4.3	0	+10.0	12.3	12.3	12.3	12.5	12.3	12.3	12.3	12.2
7	-7.7	+5.6	+10.1	0	12.2	12.2	12.5	12.2	12.3	12.2	12.2	12.1

Scenario:

Scenario 1: @ CTA connection #1 and #2 closed, @ ComEd circuit #1 and #2 closed. This represents the normal condition.

Scenario 2: @ CTA connection #1 open and #2 closed, @ ComEd circuit #1 open and #2 closed. This represents an outage of ComEd circuit #1.

Scenario 3: @ CTA connection #1 and bus tie open and #2 closed, @ ComEd circuit #1 and #2 closed. This represents an outage of CTA Bus #1.

Scenario 4: @ CTA connection #1 closed and #2 open, @ ComEd circuit #1 closed and #2 open. This represents an outage of ComEd circuit #2.

Scenario 5: @ CTA connection #1 closed and #2 and bus tie open, @ ComEd circuit #1 and #2 closed. This represents an outage of CTA Bus #2.

Scenario 6: @ CTA connection #1 and #2 closed, @ ComEd circuit #1 open and #2 closed. This represents loss of source for ComEd circuit #1.

Scenario 7: @ CTA connection #1 and #2 closed, @ ComEd circuit #1 closed and #2 open. This represents loss of source for ComEd circuit #2.

CONFIDENTIAL AND PROPRIETARY - CEII

SS SUBSTATION

T CYME Study Results

Scenario	@ CTA / Metra Connection #1 (MVA)	@ CTA / Metra - Connection #2 (MVA)	@ ComEd - Circuit #1 (MVA)	@ ComEd - Circuit #2 (MVA)	@ CTA / Metra - Connection #1 (kV)	@ CTA / Metra - Connection #2 (kV)	@ ComEd - Circuit #1 (kV)	@ ComEd - Circuit #2 (kV)
1	0.4	-4.0	3.8	4.0	12.8	12.8	12.9	12.9
2	0.0	-3.6	0.0	3.7	0.0	12.8	0.0	12.9
3	0.0	-3.6	4.0	3.7	12.8	12.8	12.9	12.9
4	-3.6	0.0	8.0	0.0	12.5	0.0	12.8	0.0
5	-3.6	0.0	8.0	0.0	12.5	13.0	12.8	13.0
6	4.2	-7.8	0.0	8.0	12.6	12.6	12.6	12.8
7	-3.6	0.0	8.0	0.0	12.5	12.5	12.8	12.5

T Cyme Results Comparison

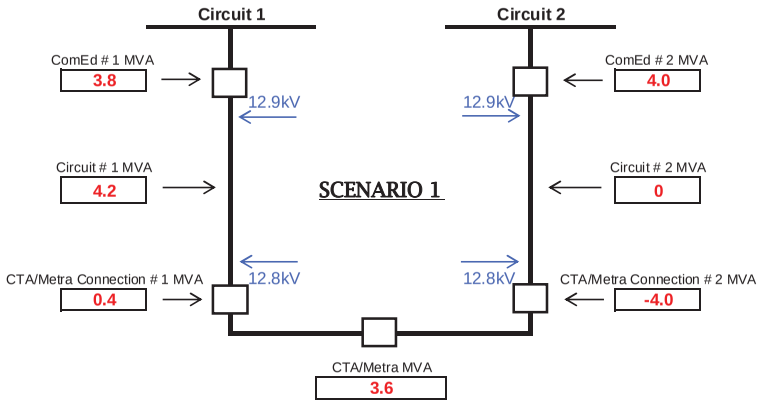

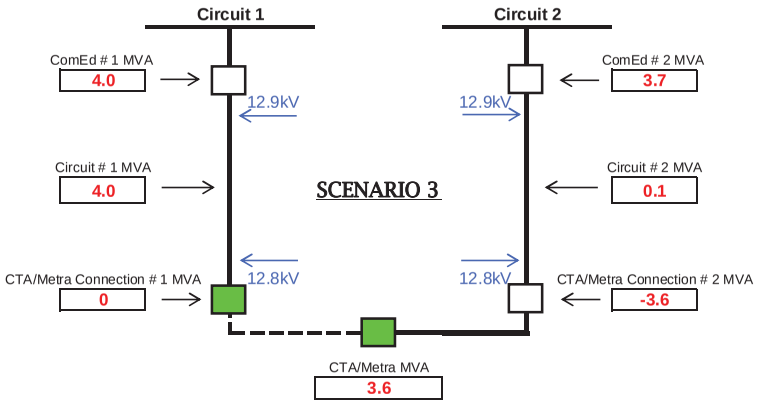

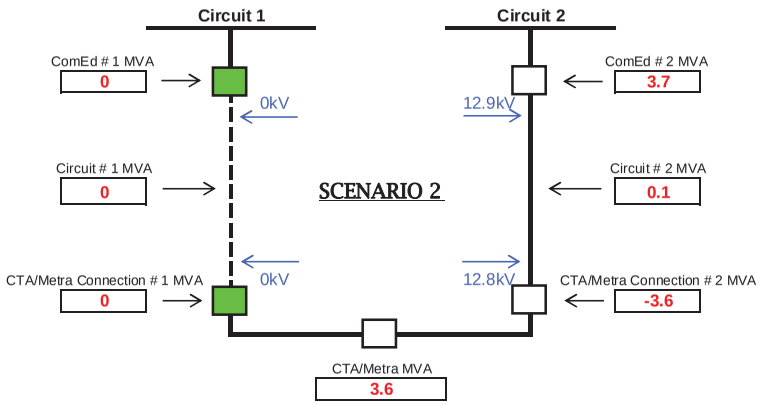

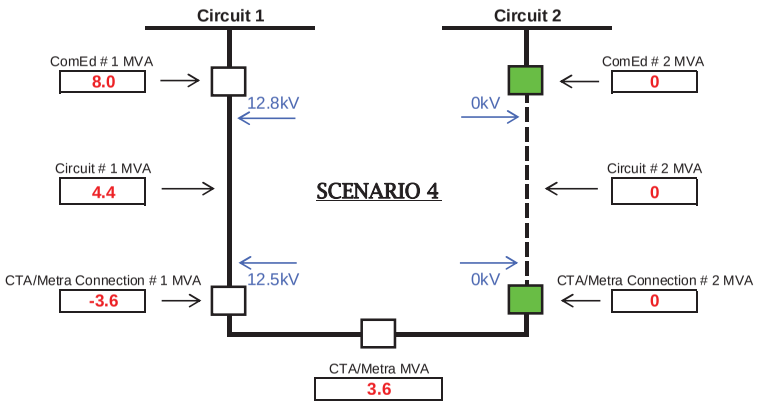

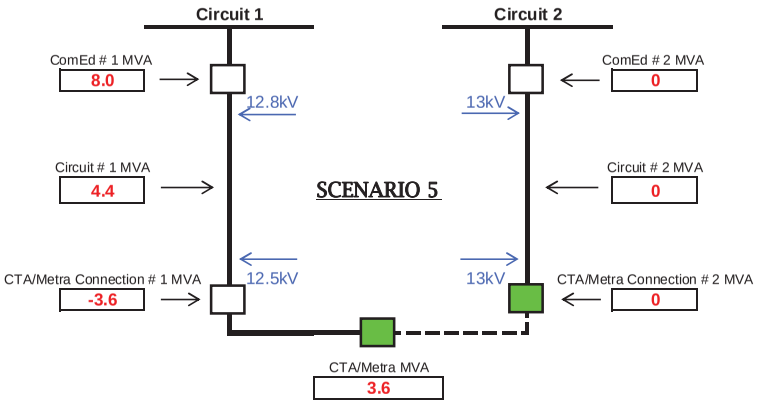
Circuit 1
Circuit 2
ComEd # 1 MVA
8.0
ComEd # 2 MVA
0
12.8kV
13kV
Circuit # 1 MVA
4.4
SCENARIO 5
Circuit # 2 MVA
0
12.5kV
13kV
CTA/Metra Connection # 1 MVA
-3.6
CTA/Metra Connection # 2 MVA
0
CTA/Metra MVA
3.6

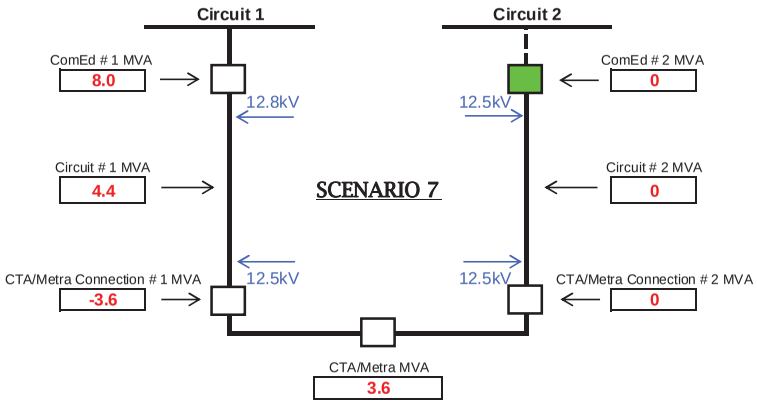
Circuit 1
Circuit 2
ComEd # 1 MVA
8.0
ComEd # 2 MVA
0
12.8kV
12.5kV
Circuit # 1 MVA
4.4
SCENARIO 7
Circuit # 2 MVA
0
12.5kV
12.5kV
CTA/Metra Connection # 1 MVA
-3.6
CTA/Metra Connection # 2 MVA
0
CTA/Metra MVA
3.6

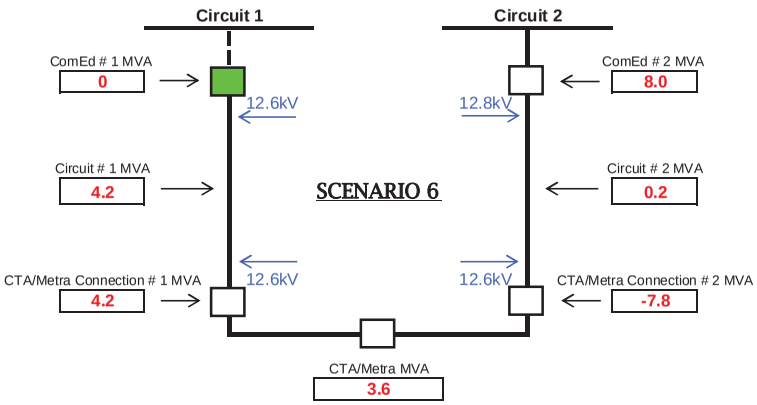
Circuit 1
Circuit 2
ComEd # 1 MVA
0
ComEd # 2 MVA
8.0
12.6kV
12.8kV
Circuit # 1 MVA
4.2
SCENARIO 6
Circuit # 2 MVA
0.2
12.6kV
12.6kV
CTA/Metra Connection # 1 MVA
4.2
CTA/Metra Connection # 2 MVA
-7.8
CTA/Metra MVA
3.6

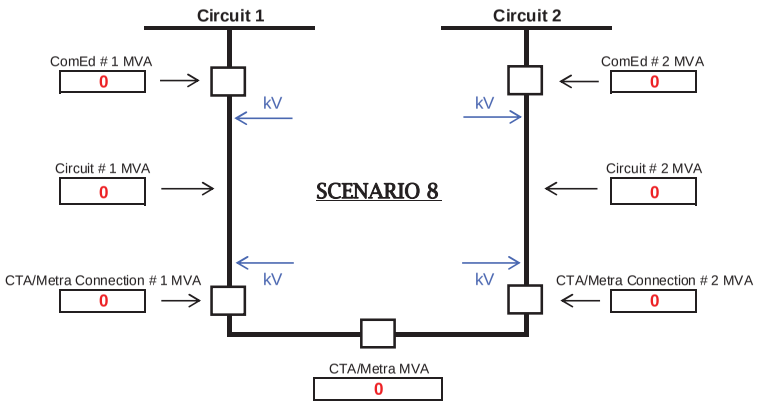
Circuit 1
Circuit 2
ComEd # 1 MVA
0
ComEd # 2 MVA
0
kV
kV
Circuit # 1 MVA
0
SCENARIO 8
Circuit # 2 MVA
0
kV
kV
CTA/Metra Connection # 1 MVA
0
CTA/Metra Connection # 2 MVA
0
CTA/Metra MVA
0

T CYME Study Information

- [redacted] assumed load demand [redacted] PF [redacted] (based on LFM record). LFM record indicates --- KVA demand on [redacted] and [redacted] demand on [redacted] Analysis indicates that [redacted] is no longer in service and the customers on that transformer have been transferred to [redacted]

- [redacted] assumed load demand [redacted] PF= [redacted] per CIMS [redacted] data.

- [redacted], [redacted] assume load demand [redacted] (as obtained in CYME) and that the loads for [redacted] are applied at [redacted] substation.

- [redacted] substation load was obtained from Cedar Loads. Peak load for each feeding line is [redacted] KVA with assumed PF= [redacted].

- [redacted] APT load information used.
  - [redacted] APT selected load date: [redacted]
  - [redacted] APT actual load on [redacted]
  - [redacted] APT WA on selected load date: [redacted]
  - [redacted] WA load: [redacted]

- [redacted] APT load information used.
  - [redacted] APT selected load date: [redacted]
  - [redacted] APT actual load on [redacted]
  - [redacted] APT WA on selected load date: [redacted]
  - [redacted] WA load: [redacted] [redacted]

- [redacted] load allocation method
  - Validate in the CYME model all transformers, ESS loads, including [redacted] KVA for each feeding line at [redacted] per Cedar meter information.
  - The point where the feeders [redacted] and [redacted] are tied (Breaker at [redacted] feeder side of [redacted] was identified as the zero point. [redacted] is flowing through [redacted] from [redacted] to [redacted]
  - Enter feeder loads: [redacted] **for** [redacted] (Avg WA [redacted] minus the [redacted] contributed to [redacted] and [redacted] **for** [redacted] (Avg WA [redacted] plus the [redacted] supported from [redacted]
  - Ignore motors
  - Open zero point breaker [redacted] and allocate the loads.
  - Adjust pf at source [redacted] pf for [redacted] pf for [redacted] and allocate to obtain an adjusted load PF of [redacted] [redacted] on feeders [redacted] for [redacted] for [redacted] for [redacted] [redacted]
  - Close zero point breaker [redacted] and run analysis.

- [redacted] midpoint KV taken at cable section 487769046 and endpoint KV taken at section before 487848826.

- [redacted] midpoint KV taken at cable section 487787340 and endpoint KV taken at section before the [redacted].

T CYME Study Results

Scenario	@ CTA -Connection #1 (MVA)	@ CTA - Connection #2 (MVA)	@ ComEd - Circuit #1 (MVA)	@ ComEd - Circuit #2 (MVA)	@ CTA -Connection #1 (kV)	@ CTA - Connection #2 (kV)	@ ComEd - Circuit #1 (kV)	@ ComEd - Circuit #2 (kV)	@ ComEd - Circuit #1 Midpoint (kV)	@ ComEd - Circuit #2 Midpoint (kV)	@ ComEd - Circuit #1 Endpoint (kV)	@ ComEd - Circuit #2 Endpoint (kV)
1	+0.4	-4.0	+3.8	+4.0	12.8	12.8	12.9	12.9	12.8	12.9	12.7	12.8
2	0.0	-3.6	0.0	+3.7	0.0	12.8	0.0	12.9	0.0	12.9	0.0	12.8
3	0.0	-3.6	+4.0	+3.7	12.8	12.8	12.9	12.9	12.8	12.9	12.7	12.8
4	-3.6	0.0	+8.0	0.0	12.5	0.0	12.8	0.0	12.6	0.0	12.5	0.0
5	-3.6	0.0	+8.0	0.0	12.5	13.0	12.8	13.0	12.6	13.0	12.5	13.0
6	+4.2	-7.8	0.0	+8.0	12.6	12.6	12.6	12.8	12.6	12.7	12.5	12.6
7	-3.6	0.0	+8.0	0.0	12.5	12.5	12.8	12.5	12.6	12.5	12.5	12.5

Scenario:

Scenario 1: @ CTA/Metra connection #1 and #2 closed, @ ComEd circuit #1 and #2 closed. This represents the normal condition.

Scenario 2: @ CTA/Metra connection #1 open and #2 closed, @ ComEd circuit #1 open and #2 closed. This represents an outage of ComEd circuit #1.

Scenario 3: @ CTA/Metra connection #1 and bus tie open and #2 closed, @ ComEd circuit #1 and #2 closed. This represents an outage of CTA/Metra Bus #1.

Scenario 4: @ CTA/Metra connection #1 closed and #2 open, @ ComEd circuit #1 closed and #2 open. This represents an outage of ComEd circuit #2.

Scenario 5: @ CTA/Metra connection #1 closed and #2 and bus tie open, @ ComEd circuit #1 and #2 closed. This represents an outage of CTA/Metra Bus #2.

Scenario 6: @ CTA/Metra connection #1 and #2 closed, @ ComEd circuit #1 open and #2 closed. This represents loss of source for ComEd circuit #1.

Scenario 7: @ CTA/Metra connection #1 and #2 closed, @ ComEd circuit #1 closed and #2 open. This represents loss of source for ComEd circuit #2.

CONFIDENTIAL AND PROPRIETARY - CEII

T SUBSTATION

UU CTA CYME Study Results

Scenario	@ CTA / Metra -Connection #1 (MVA)	@ CTA / Metra - Connection #2 (MVA)	@ ComEd - Circuit #1 (MVA)	@ ComEd - Circuit #2 (MVA)	@ CTA / Metra - Connection #1 (kV)	@ CTA / Metra - Connection #2 (kV)	@ ComEd - Circuit #1 (kV)	@ ComEd - Circuit #2 (kV)
1	-2.6	0.7	2.6	3.4	13.0	13.0	13.0	13.0
2	0.0	-1.9	0.0	6.1	0.0	12.9	0.0	13.0
3	0.0	-1.9	0.0	6.1	13.0	12.9	13.0	13.0
4	-1.9	0.0	1.9	0.0	13.0	0.0	13.0	0.0
5	-1.9	0.0	1.9	4.1	13.0	13.0	13.0	13.0
6	0.0	-1.9	0.0	6.1	12.9	12.9	12.9	13.0
7	-6.0	4.1	6.1	0.0	12.9	12.9	13.0	12.9
8								

KV

UU CTA Cyme Results Comparison

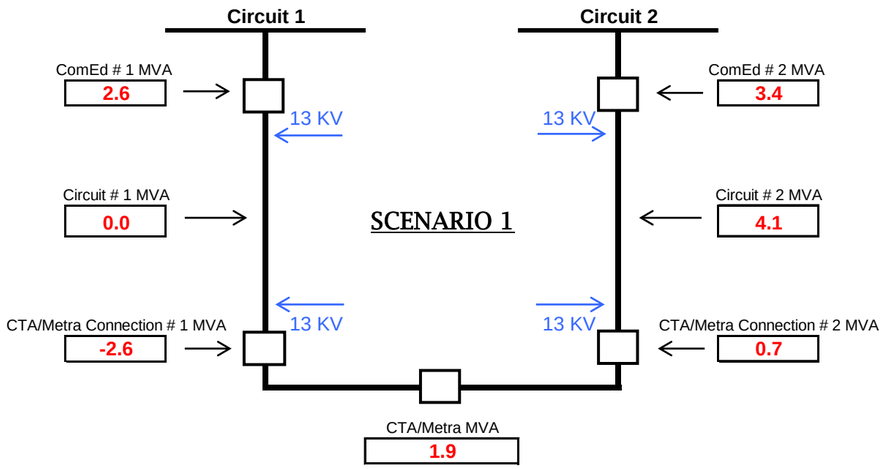

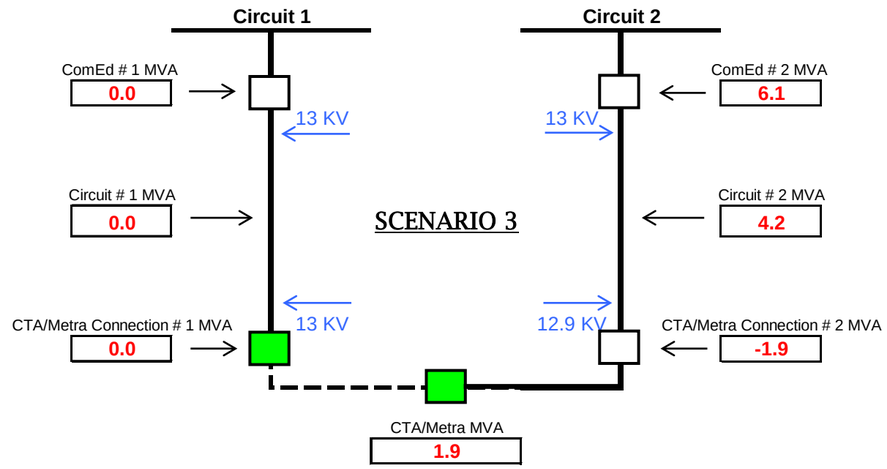

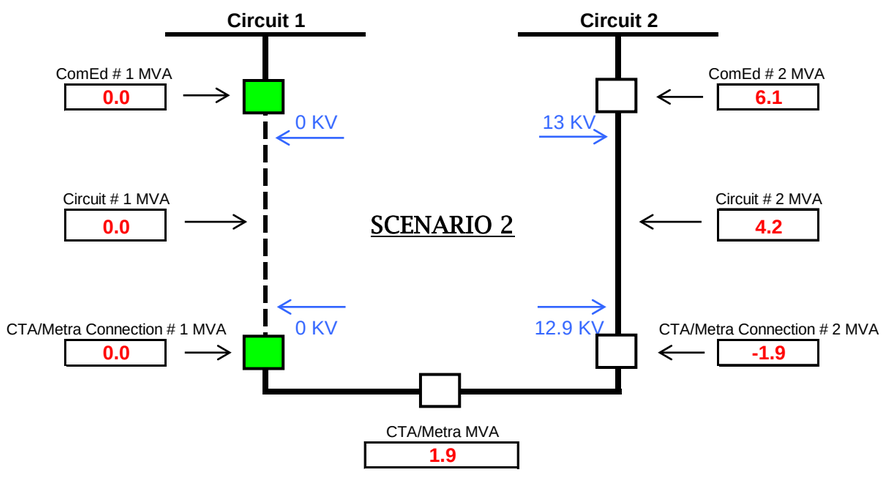

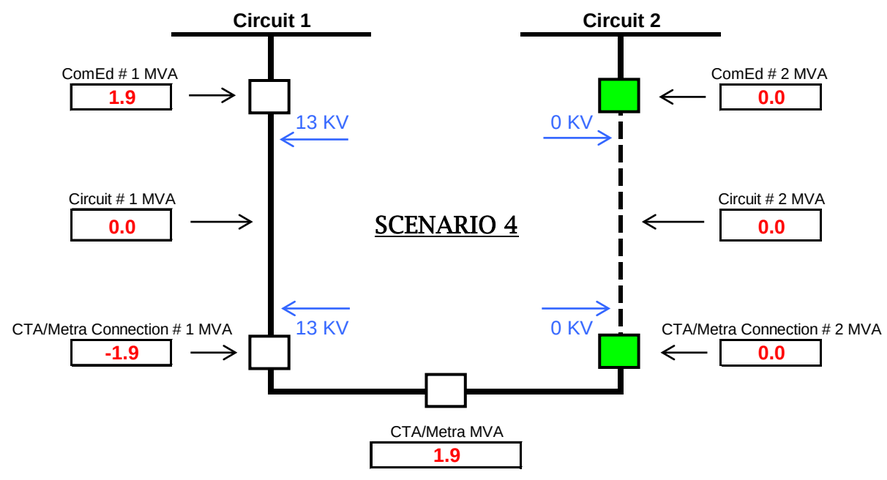

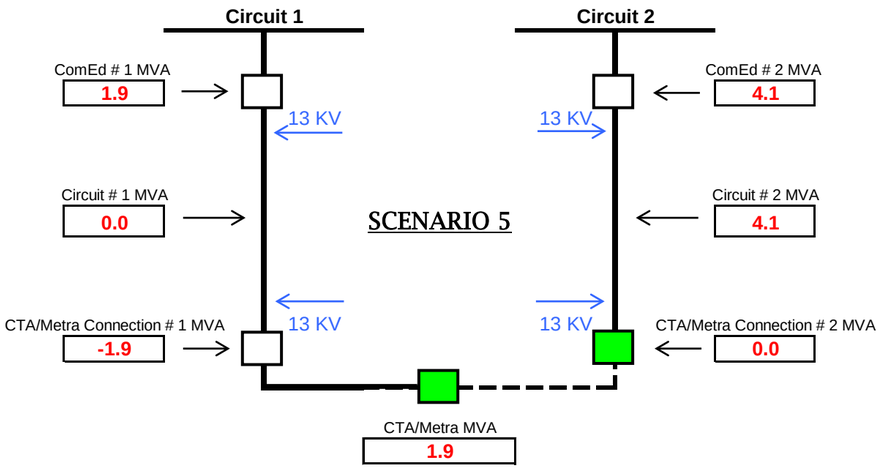
Circuit 1
Circuit 2
ComEd # 1 MVA
1.9
ComEd # 2 MVA
4.1
13 KV
13 KV
Circuit # 1 MVA
0.0
SCENARIO 5
Circuit # 2 MVA
4.1
CTA/Metra Connection # 1 MVA
-1.9
13 KV
13 KV
CTA/Metra Connection # 2 MVA
0.0
CTA/Metra MVA
1.9

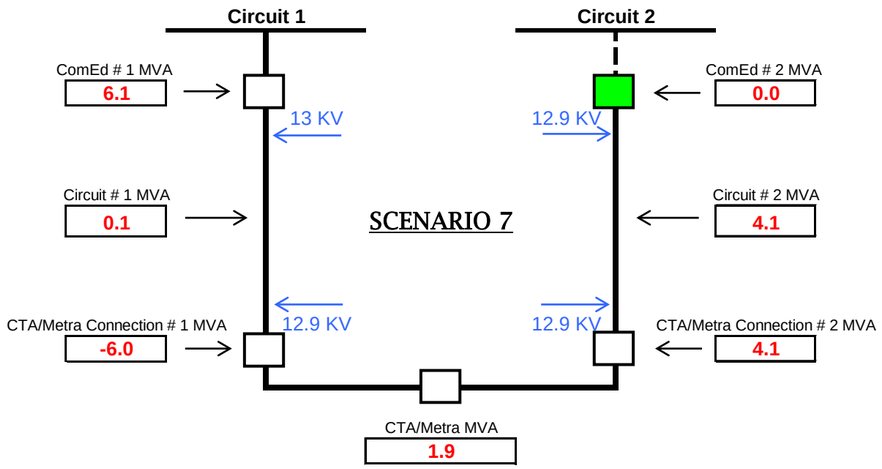
Circuit 1
Circuit 2
ComEd # 1 MVA
6.1
ComEd # 2 MVA
0.0
13 KV
12.9 KV
Circuit # 1 MVA
0.1
SCENARIO 7
Circuit # 2 MVA
4.1
CTA/Metra Connection # 1 MVA
-6.0
12.9 KV
12.9 KV
CTA/Metra Connection # 2 MVA
4.1
CTA/Metra MVA
1.9

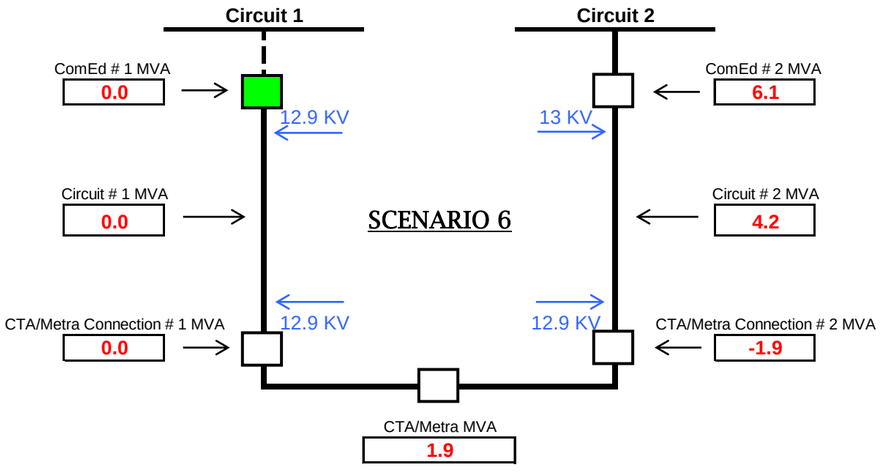
Circuit 1
Circuit 2
ComEd # 1 MVA
0.0
ComEd # 2 MVA
6.1
12.9 KV
13 KV
Circuit # 1 MVA
0.0
SCENARIO 6
Circuit # 2 MVA
4.2
CTA/Metra Connection # 1 MVA
0.0
12.9 KV
12.9 KV
CTA/Metra Connection # 2 MVA
-1.9
CTA/Metra MVA
1.9

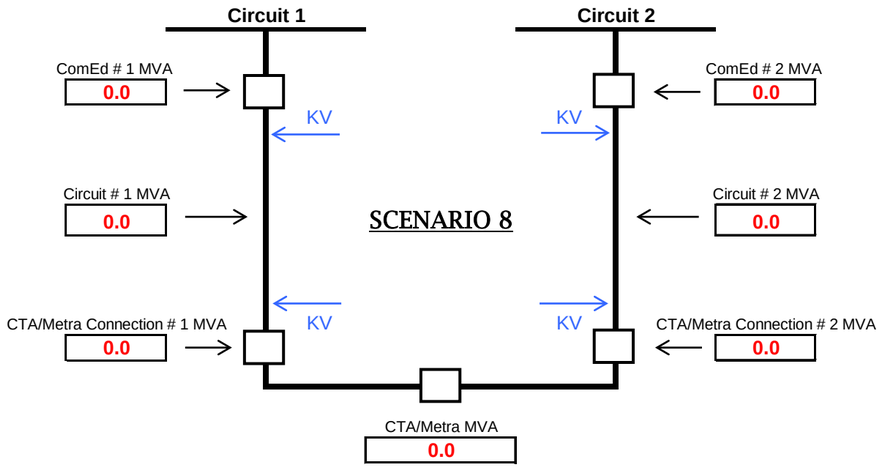
Circuit 1
Circuit 2
ComEd # 1 MVA
0.0
ComEd # 2 MVA
0.0
KV
KV
Circuit # 1 MVA
0.0
SCENARIO 8
Circuit # 2 MVA
0.0
CTA/Metra Connection # 1 MVA
0.0
KV
KV
CTA/Metra Connection # 2 MVA
0.0
CTA/Metra MVA
0.0

UU CTA CYME Study Information

- [redacted] ([redacted]) substation load was obtained from Cedar Loads. Peak load for each feeding line is [redacted]kW, with assumed PF=[redacted].

- [redacted] APT load information used.
  - [redacted] APT selected load date: [redacted]
  - [redacted] APT actual load on [redacted]: [redacted]A/[redacted]A/[redacted]A ➔ [redacted]A
  - [redacted] APT WA on selected load date: [redacted]
  - [redacted] WA load: [redacted]A/[redacted]A/[redacted]A ➔ [redacted]A

- [redacted] APT load information used.
  - [redacted] APT selected load date: [redacted]
  - [redacted] APT actual load on [redacted]: [redacted]A/[redacted]A/[redacted]A ➔ [redacted]A
  - [redacted] APT WA on selected load date: [redacted]
  - [redacted] WA load: [redacted]A/[redacted]A/[redacted]A➔ [redacted]A

- [redacted]load allocation method
  - Validate in the CYME model all ESS loads, including [redacted]kVA for each feeding line at [redacted] per Cedar meter information.
  - Open sections [redacted] and [redacted] at node [redacted], (i.e., assumed zero point of the network). This allowed for proper load allocation on the feeders.
  - Power factor of [redacted]% for [redacted] and [redacted]% for [redacted] were used during allocation so as to obtain an adjusted load PF of [redacted]– [redacted]% on all feeders.
  - Ignore motors.
  - Open zero-point and allocate the loads.
  - Close zero-point and run analysis.

- Physical midpoint kV on feeder [redacted] is taken at section [redacted] and the endpoint kV is taken at section [redacted].
- Physical midpoint kV on feeder [redacted] is taken at section [redacted] and the endpoint kV is taken at section [redacted].

UU CTA CYME Study Results

Scenario	@ CTA -Connection #1 (MVA)	@ CTA - Connection #2 (MVA)	@ ComEd - Circuit #1 (MVA)	@ ComEd - Circuit #2 (MVA)	@ CTA -Connection #1 (kV)	@ CTA - Connection #2 (kV)	@ ComEd - Circuit #1 (kV)	@ ComEd - Circuit #2 (kV)	@ ComEd - Circuit #1 Midpoint (kV)	@ ComEd - Circuit #2 Midpoint (kV)	@ ComEd - Circuit #1 Endpoint (kV)	@ ComEd - Circuit #2 Endpoint (kV)
1	-2.6	0.7	2.6	3.4	13.0	13.0	13.0	13.0	13.0	13.0	13.0	12.9
2	0	-1.9	0	6.1	0	12.9	0	13.0	0	12.9	0	12.9
3	0	-1.9	0	6.1	13.0	12.9	13.0	13.0	13.0	12.9	13.0	12.9
4	-1.9	0	1.9	0	13.0	0	13.0	0	13.0	0	13.0	0
5	-1.9	0	1.9	4.1	13.0	13.0	13.0	13.0	13.0	13.0	13.0	12.9
6	0.0	-1.9	0	6.1	12.9	12.9	12.9	13.0	12.9	12.9	12.9	12.9
7	-6.0	4.1	6.1	0	12.9	12.9	13.0	12.9	13.0	12.9	13.0	12.9

Scenario:

Scenario 1: @ CTA/Metra connection #1 and #2 closed, @ ComEd circuit #1 and #2 closed. This represents the normal condition.

Scenario 2: @ CTA/Metra connection #1 open and #2 closed, @ ComEd circuit #1 open and #2 closed. This represents an outage of ComEd circuit #1.

Scenario 3: @ CTA/Metra connection #1 and bus tie open and #2 closed, @ ComEd circuit #1 and #2 closed. This represents an outage of CTA/Metra Bus #1.

Scenario 4: @ CTA/Metra connection #1 closed and #2 open, @ ComEd circuit #1 closed and #2 open. This represents an outage of ComEd circuit #2.

Scenario 5: @ CTA/Metra connection #1 closed and #2 and bus tie open, @ ComEd circuit #1 and #2 closed. This represents an outage of CTA/Metra Bus #2.

Scenario 6: @ CTA/Metra connection #1 and #2 closed, @ ComEd circuit #1 open and #2 closed. This represents loss of source for ComEd circuit #1.

Scenario 7: @ CTA/Metra connection #1 and #2 closed, @ ComEd circuit #1 closed and #2 open. This represents loss of source for ComEd circuit #2.

CONFIDENTIAL AND PROPRIETARY - CEII

UU SUBSTATION

V CYME Study Results

Scenario	@ CTA / Metra - Connection #1 (MVA)	@ CTA / Metra - Connection #2 (MVA)	@ ComEd - Circuit #1 (MVA)	@ ComEd - Circuit #2 (MVA)	@ CTA / Metra - Connection #1 (kV)	@ CTA / Metra - Connection #2 (kV)	@ ComEd - Circuit #1 (kV)	@ ComEd - Circuit #2 (kV)
1	-4.6	3.9	4.8	4.3	12.6	12.6	13.0	13.0
2	0.0	-0.7	0.0	9.6	0.0	11.9	0.0	13.0
3	0.0	-0.7	0.0	9.6	13.0	11.9	13.0	13.0
4	-0.7	0.0	0.7	0.0	12.9	0.0	13.0	0.0
5	-0.7	0.0	0.7	8.8	12.9	12.0	13.0	13.0
6	0.0	-0.7	0.0	9.6	11.9	11.9	11.9	13.0
7	-8.8	8.1	9.4	0.0	12.1	12.1	13.0	12.1
8								

V Cyme Results Comparison

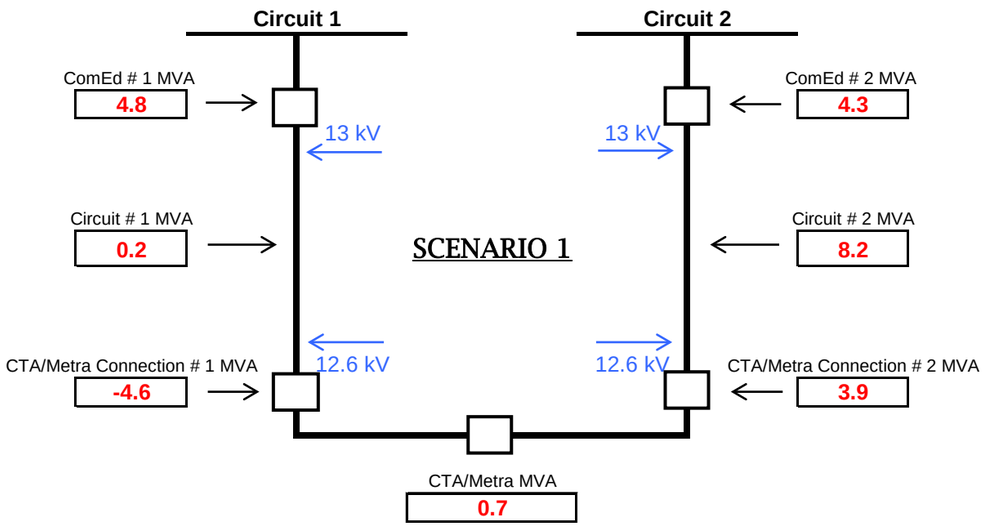

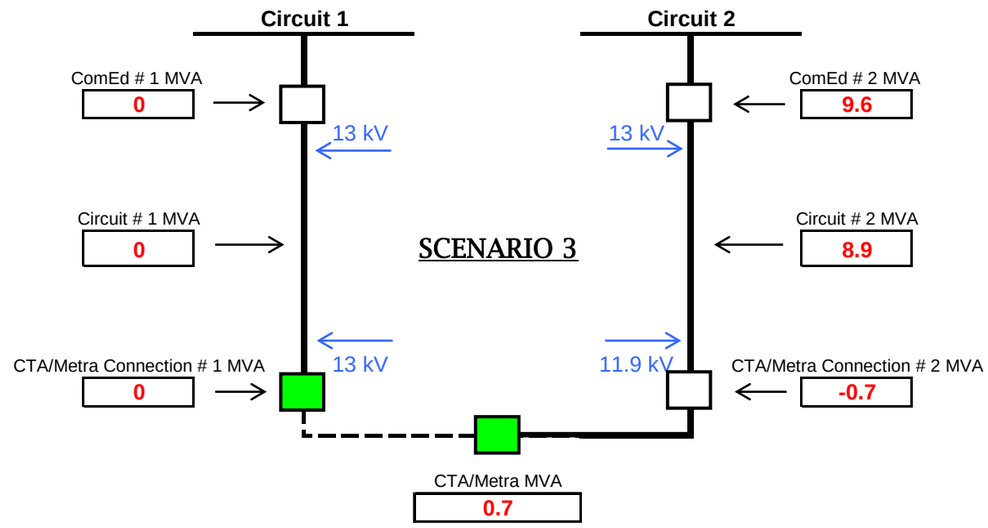

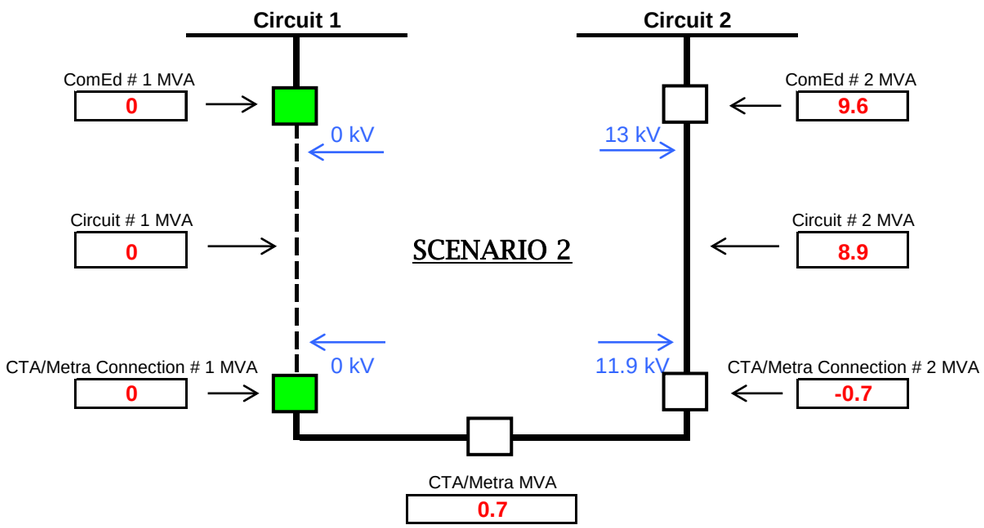

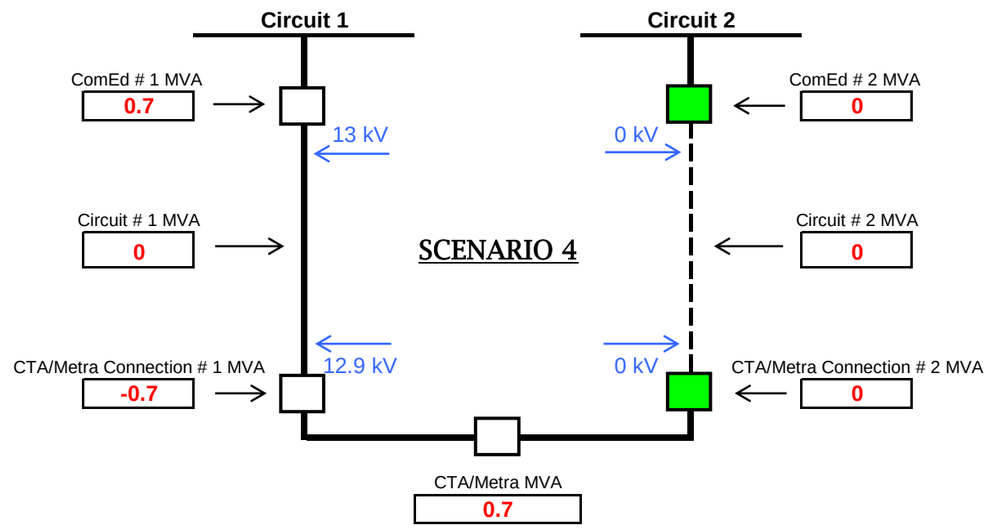

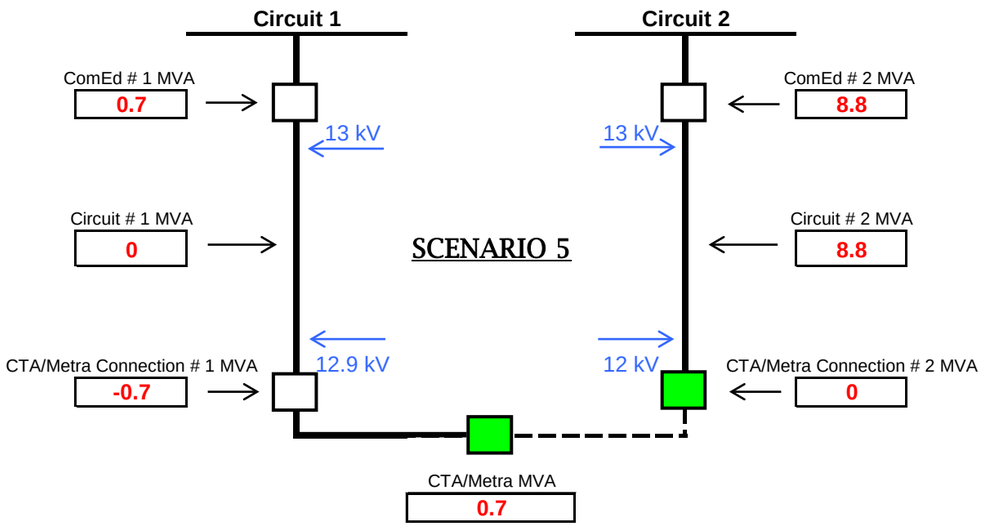
Circuit 1
Circuit 2
ComEd # 1 MVA
0.7
13 kV
13 kV
ComEd # 2 MVA
8.8
Circuit # 1 MVA
0
SCENARIO 5
Circuit # 2 MVA
8.8
CTA/Metra Connection # 1 MVA
-0.7
12.9 kV
12 kV
CTA/Metra Connection # 2 MVA
0
CTA/Metra MVA
0.7

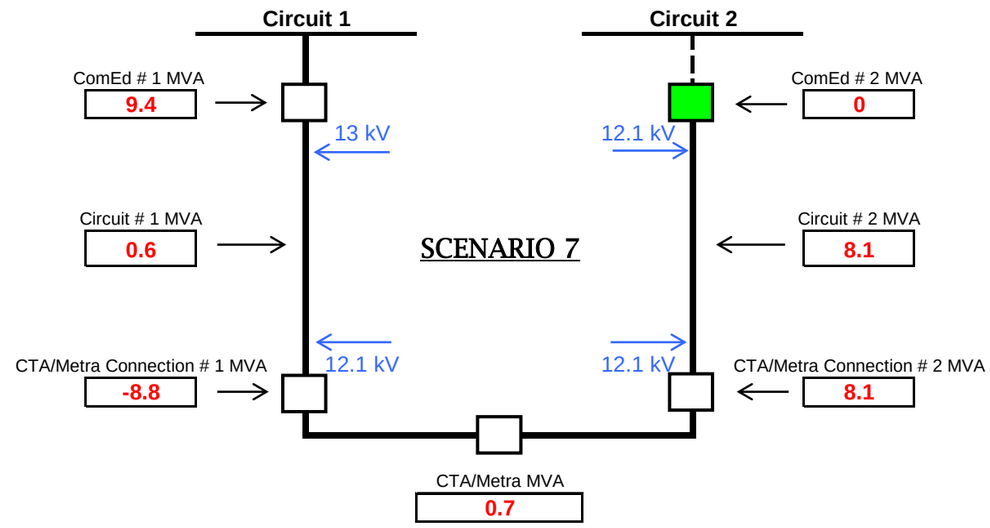
Circuit 1
Circuit 2
ComEd # 1 MVA
9.4
13 kV
12.1 kV
ComEd # 2 MVA
0
Circuit # 1 MVA
0.6
SCENARIO 7
Circuit # 2 MVA
8.1
CTA/Metra Connection # 1 MVA
-8.8
12.1 kV
12.1 kV
CTA/Metra Connection # 2 MVA
8.1
CTA/Metra MVA
0.7

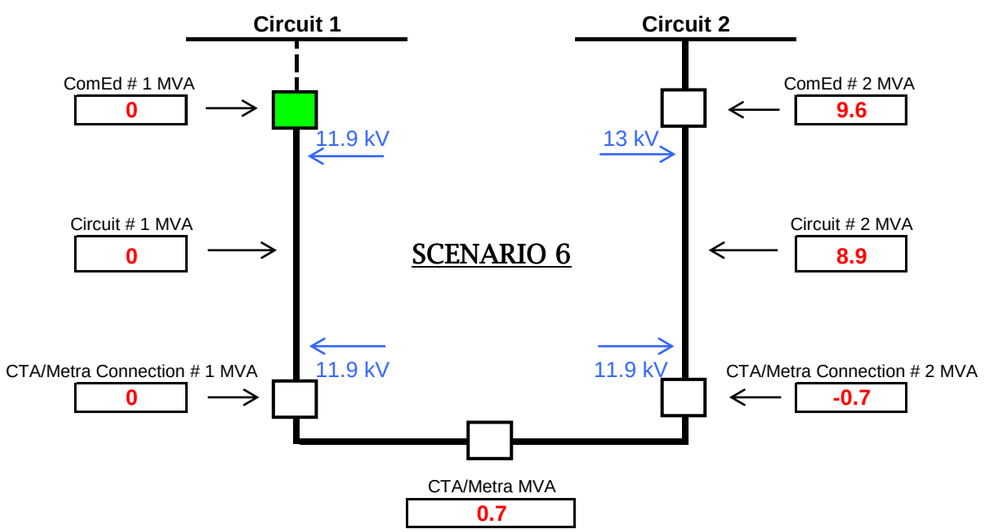
Circuit 1
Circuit 2
ComEd # 1 MVA
0
11.9 kV
13 kV
ComEd # 2 MVA
9.6
Circuit # 1 MVA
0
SCENARIO 6
Circuit # 2 MVA
8.9
CTA/Metra Connection # 1 MVA
0
11.9 kV
11.9 kV
CTA/Metra Connection # 2 MVA
-0.7
CTA/Metra MVA
0.7

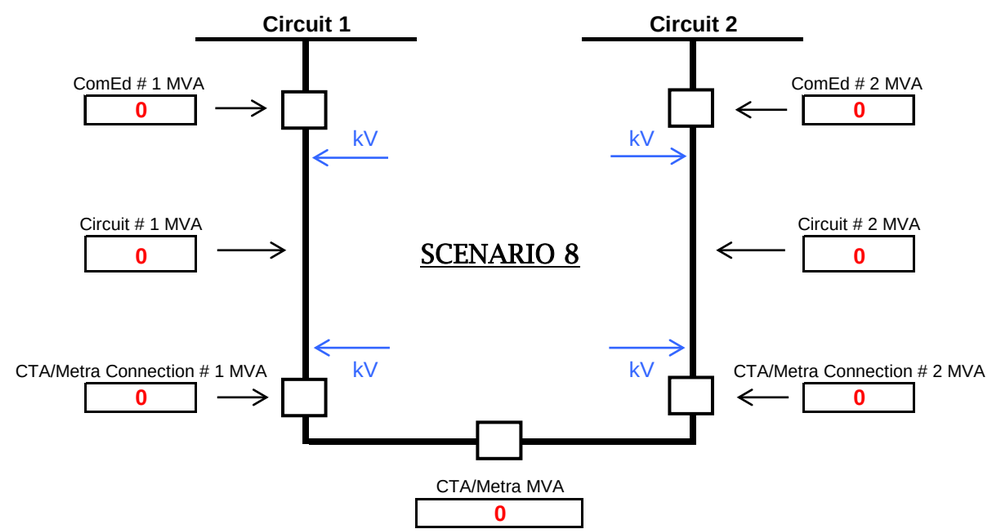
Circuit 1
Circuit 2
ComEd # 1 MVA
0
kV
kV
ComEd # 2 MVA
0
Circuit # 1 MVA
0
SCENARIO 8
Circuit # 2 MVA
0
CTA/Metra Connection # 1 MVA
0
kV
kV
CTA/Metra Connection # 2 MVA
0
CTA/Metra MVA
0

V CYME Study Information

- [redacted] load obtained from CIMS for [redacted] via accounts tied to transformer in SBT.
- [redacted] load obtained from CIMS for [redacted] via accounts tied to transformer in SBT.
- [redacted] substation load obtained from CEDAR for [redacted].
- [redacted] APT load information used.
  - [redacted] APT selected load date: [redacted]
  - [redacted] APT actual load on [redacted]
  - [redacted] APT WA on selected load date: [redacted]
  - [redacted] WA load: [redacted]
- [redacted] APT load information used.
  - [redacted] APT selected load date: [redacted]
  - [redacted] APT actual load on [redacted]
  - [redacted] APT WA on selected load date: [redacted]
  - [redacted] WA load: [redacted]
- [redacted] load allocation method
  - Open bus tie at [redacted] substation
  - Allocate [redacted].
  - Allocate [redacted]
    Ignore motors
  - Adjust pf at source [redacted] and allocate to obtain an adjusted load PF of [redacted] [redacted] feeders [redacted]
  - Close [redacted] and run analysis.
- [redacted] midpoint KV taken at cable section 487784933 and endpoint KV taken at section [redacted].
- [redacted] midpoint KV taken at cable section 487776408 and endpoint KV taken at overhead section 117697016.

V CYME Study Results

Scenario	@ CTA -Connection #1 (MVA)	@ CTA - Connection #2 (MVA)	@ ComEd - Circuit #1 (MVA)	@ ComEd - Circuit #2 (MVA)	@ CTA -Connection #1 (kV)	@ CTA - Connection #2 (kV)	@ ComEd - Circuit #1 (kV)	@ ComEd - Circuit #2 (kV)	@ ComEd - Circuit #1 Midpoint (kV)	@ ComEd - Circuit #2 Midpoint (kV)	@ ComEd - Circuit #1 Endpoint (kV)	@ ComEd - Circuit #2 Endpoint (kV)
1	-4.6	+3.9	+4.8	+4.3	12.6	12.6	13.0	13.0	12.8	12.6	12.6	12.3
2	0.0	-0.7	0.0	+9.6	0.0	11.9	0.0	13.0	0.0	12.2	0.0	11.6
3	0.0	-0.7	0.0	+9.6	13.0	11.9	13.0	13.0	13.0	12.2	13.0	11.6
4	-0.7	0.0	+0.7	0.0	12.9	0.0	13.0	0.0	13.0	0.0	12.9	0.0
5	-0.7	0.0	+0.7	+8.8	12.9	12.0	13.0	13.0	13.0	12.3	12.9	11.7
6	0.0	-0.7	0.0	+9.6	11.9	11.9	11.9	13.0	11.9	12.2	11.9	11.6
7	-8.8	+8.1	+9.4	0.0	12.1	12.1	13.0	12.1	12.5	12.1	12.1	11.8

Scenario:

Scenario 1: @ CTA/Metra connection #1 and #2 closed, @ ComEd circuit #1 and #2 closed. This represents the normal condition.

Scenario 2: @ CTA/Metra connection #1 open and #2 closed, @ ComEd circuit #1 open and #2 closed. This represents an outage of ComEd circuit #1.

Scenario 3: @ CTA/Metra connection #1 and bus tie open and #2 closed, @ ComEd circuit #1 and #2 closed. This represents an outage of CTA/Metra Bus #1.

Scenario 4: @ CTA/Metra connection #1 closed and #2 open, @ ComEd circuit #1 closed and #2 open. This represents an outage of ComEd circuit #2.

Scenario 5: @ CTA/Metra connection #1 closed and #2 and bus tie open, @ ComEd circuit #1 and #2 closed. This represents an outage of CTA/Metra Bus #2.

Scenario 6: @ CTA/Metra connection #1 and #2 closed, @ ComEd circuit #1 open and #2 closed. This represents loss of source for ComEd circuit #1.

Scenario 7: @ CTA/Metra connection #1 and #2 closed, @ ComEd circuit #1 closed and #2 open. This represents loss of source for ComEd circuit #2.

CONFIDENTIAL AND PROPRIETARY - CEII

V SUBSTATION

VV- CYME Study Results

Scenario	@ CTA / Metra - Connection #1 (MVA)	@ CTA / Metra - Connection #2 (MVA)	@ ComEd - Circuit #1 (MVA)	@ ComEd - Circuit #2 (MVA)	@ CTA / Metra - Connection #1 (kV)	@ CTA / Metra - Connection #2 (kV)	@ ComEd - Circuit #1 (kV)	@ ComEd - Circuit #2 (kV)
1	-0.6	-0.3	3.8	4.8	12.4	12.4	12.5	12.5
2	0.0	-0.8	0.0	5.4	0.0	12.4	0.0	12.5
3	0.0	-0.8	3.2	5.4	12.4	12.4	12.5	12.5
4	-0.8	0.0	4.1	0.0	12.4	0.0	12.5	0.0
5	-0.8	0.0	4.1	4.6	12.4	12.4	12.5	12.5
6	3.1	-4.0	0.0	8.6	12.3	12.3	12.3	12.5
7	-5.3	4.5	8.6	0.0	12.3	12.3	12.5	12.3

VV Cyme Results Comparison

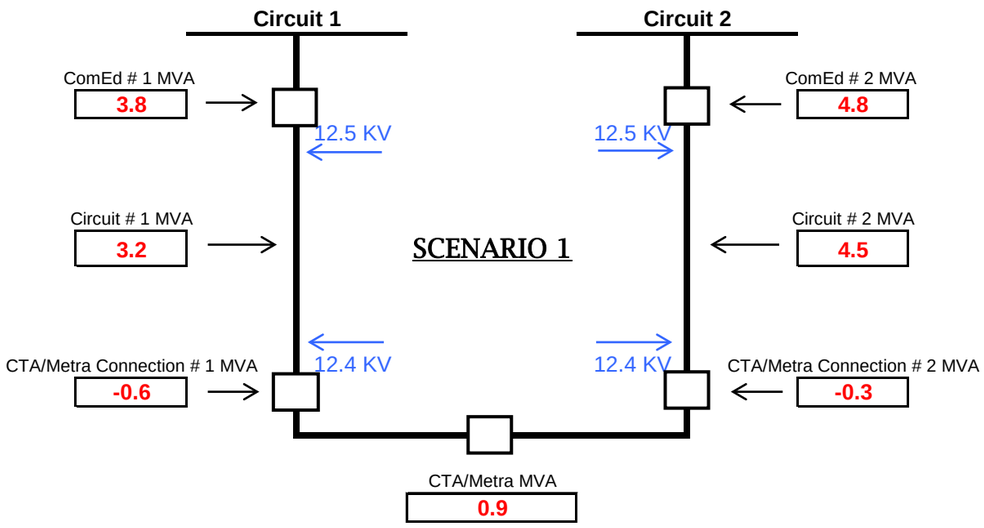

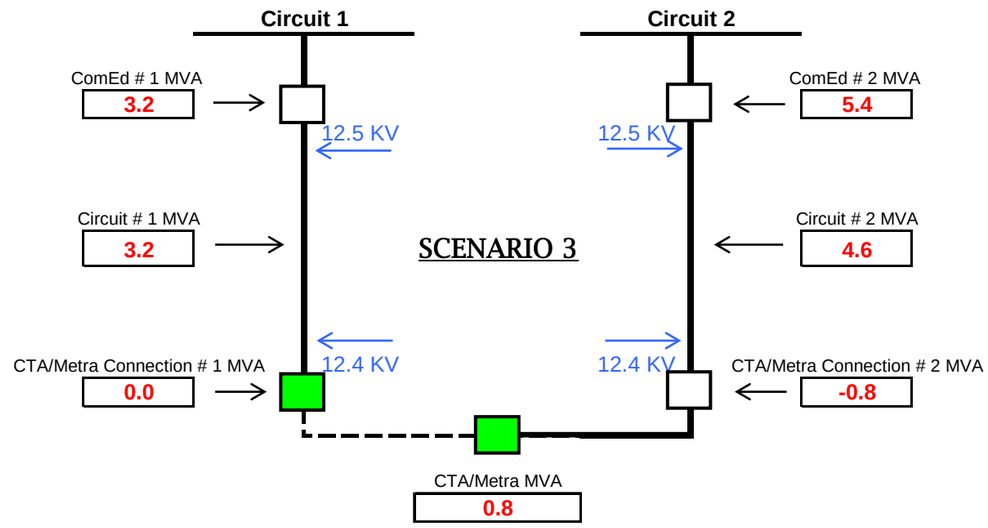

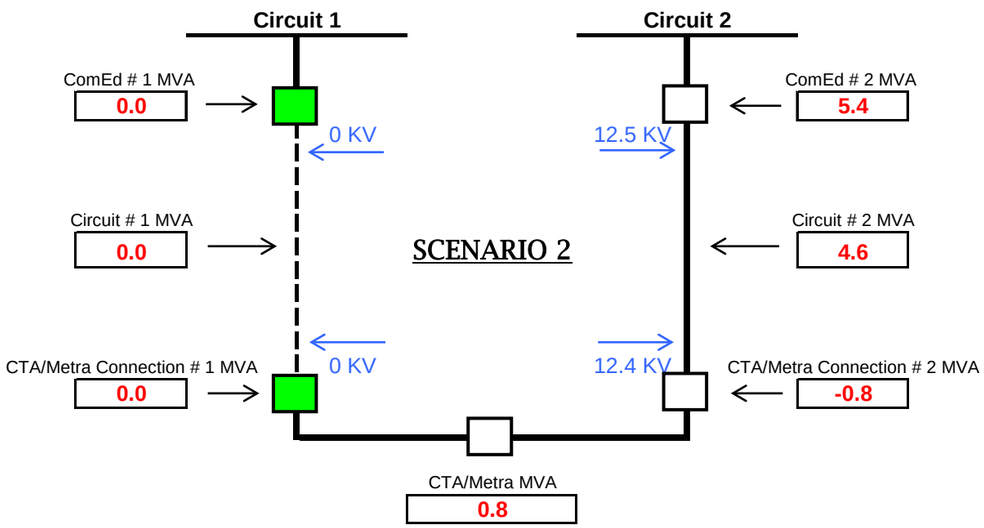

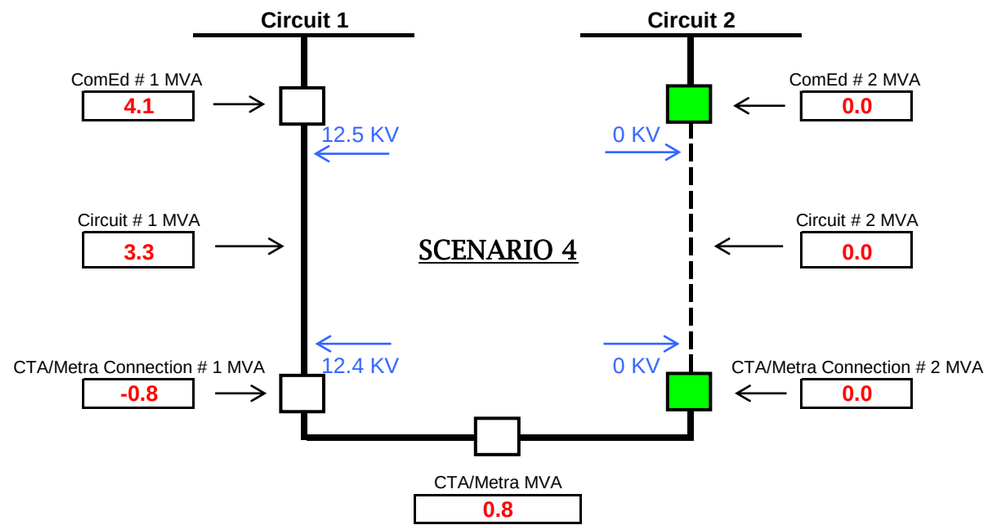

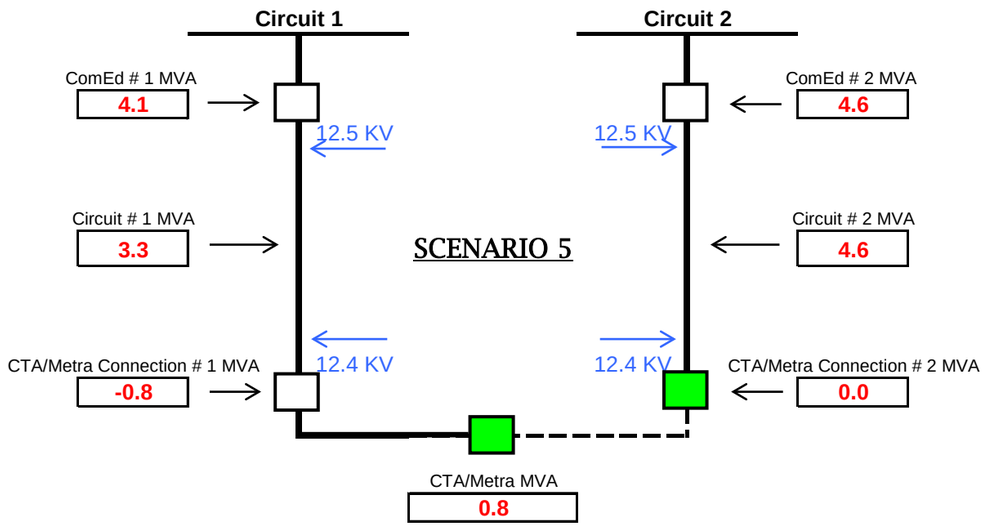
Circuit 1
Circuit 2
ComEd # 1 MVA
4.1
12.5 KV
12.5 KV
ComEd # 2 MVA
4.6
Circuit # 1 MVA
3.3
SCENARIO 5
Circuit # 2 MVA
4.6
12.4 KV
12.4 KV
CTA/Metra Connection # 1 MVA
-0.8
CTA/Metra Connection # 2 MVA
0.0
CTA/Metra MVA
0.8

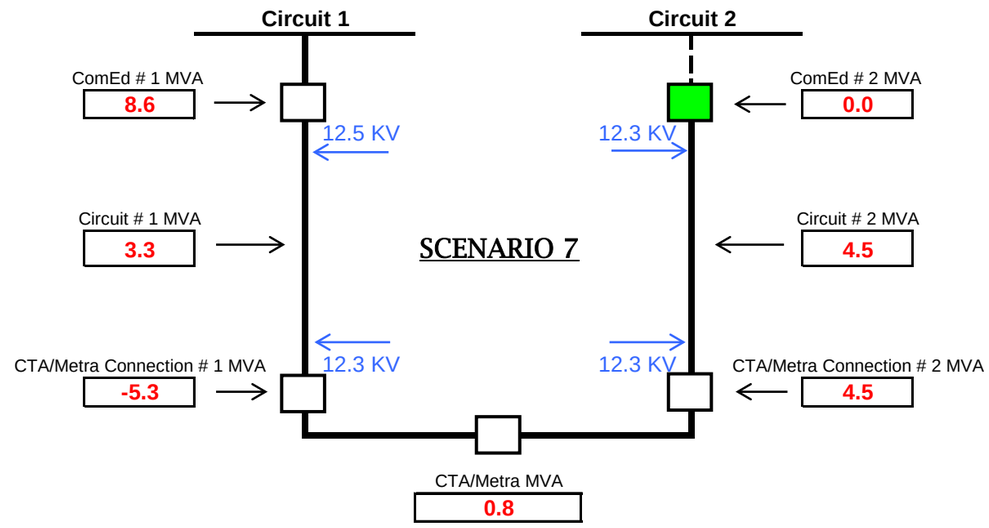
Circuit 1
Circuit 2
ComEd # 1 MVA
8.6
12.5 KV
12.3 KV
ComEd # 2 MVA
0.0
Circuit # 1 MVA
3.3
SCENARIO 7
Circuit # 2 MVA
4.5
12.3 KV
12.3 KV
CTA/Metra Connection # 1 MVA
-5.3
CTA/Metra Connection # 2 MVA
4.5
CTA/Metra MVA
0.8

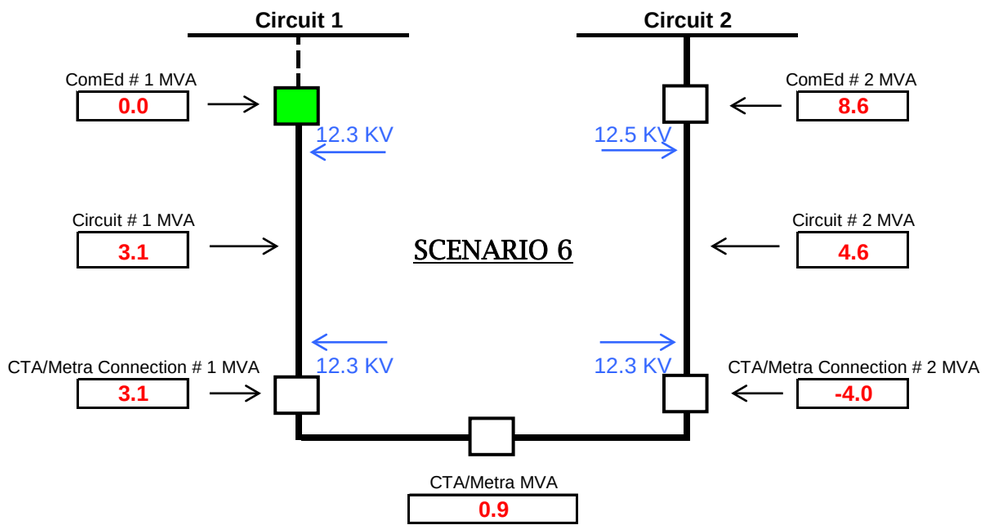
Circuit 1
Circuit 2
ComEd # 1 MVA
0.0
12.3 KV
12.5 KV
ComEd # 2 MVA
8.6
Circuit # 1 MVA
3.1
SCENARIO 6
Circuit # 2 MVA
4.6
12.3 KV
12.3 KV
CTA/Metra Connection # 1 MVA
3.1
CTA/Metra Connection # 2 MVA
-4.0
CTA/Metra MVA
0.9

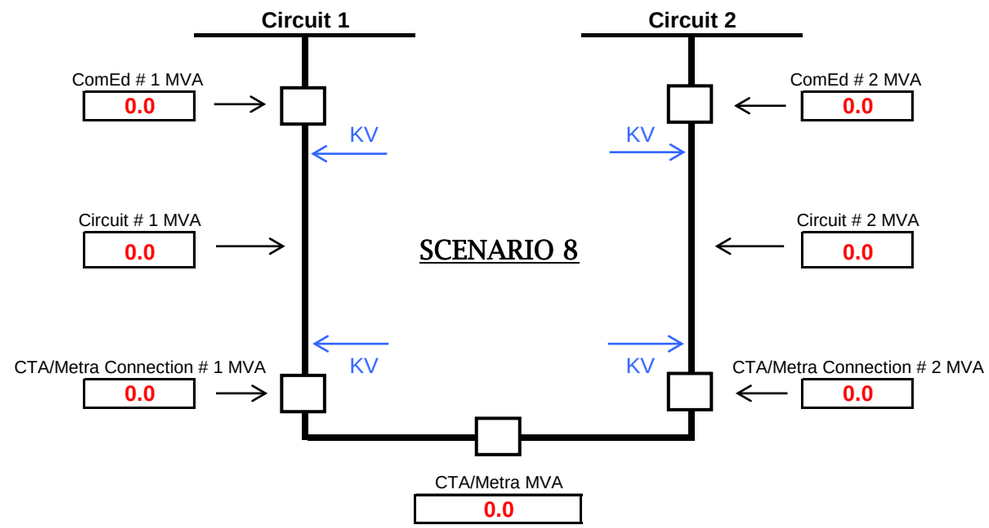
Circuit 1
Circuit 2
ComEd # 1 MVA
0.0
KV
KV
ComEd # 2 MVA
0.0
Circuit # 1 MVA
0.0
SCENARIO 8
Circuit # 2 MVA
0.0
KV
KV
CTA/Metra Connection # 1 MVA
0.0
CTA/Metra Connection # 2 MVA
0.0
CTA/Metra MVA
0.0

VV- CYME Study Information

- At [redacted], [redacted], assumed load demand [redacted]kW at PF=[redacted] (From load information provided by Cedar).

- [redacted] APT load information used.
  - [redacted] APT selected load date: [redacted]
  - [redacted] APT actual load on [redacted]: [redacted]A ➔ [redacted]A
  - [redacted] APT WA on selected load date: [redacted]
  - [redacted] WA load: [redacted]A ➔ [redacted]A

- [redacted] APT load information used.
  - [redacted] APT selected load date: [redacted]
  - [redacted] APT actual load on [redacted]: [redacted]A ➔ [redacted]A
  - [redacted] APT WA on selected load date: [redacted]
  - [redacted] WA load: [redacted]A➔ [redacted]A

- [redacted]load allocation method
  - Validate in the CYME model all transformers, ESS loads, including [redacted] [redacted]kVA for each feeding line at [redacted]per Cedar meter information.
  - Open bus tie breaker at [redacted], (i.e., assumed zero point of the network). This allowed for proper load allocation on the feeders.
  - Power factor of [redacted]% for [redacted] and [redacted]% for [redacted] were used during allocation so as to obtain an adjusted load PF of [redacted]% on all feeders.
  - Ignore motors.
  - Open zero-point section and allocate the loads.
  - Close zero-point and run analysis.

- Physical midpoint kV on feeder [redacted] is taken at section 290684516 and the endpoint kV is taken at section 290489161.

- Physical midpoint kV on feeder [redacted] is taken at section 290490130 and the endpoint kV is taken at section 54690985.

VV - CYME Study Results

Scenario	@ CTA - Connection #1 (MVA)	@ CTA - Connection #2 (MVA)	@ ComEd - Circuit #1 (MVA)	@ ComEd - Circuit #2 (MVA)	@ CTA - Connection #1 (kV)	@ CTA - Connection #2 (kV)	@ ComEd - Circuit #1 (kV)	@ ComEd - Circuit #2 (kV)	@ ComEd - Circuit #1 Midpoint (kV)	@ ComEd - Circuit #2 Midpoint (kV)	@ ComEd - Circuit #1 Endpoint (kV)	@ ComEd - Circuit #2 Endpoint (kV)
1	-0.6	-0.3	3.8	4.8	12.4	12.4	12.5	12.5	12.4	12.4	12.4	12.8
2	0.0	-0.8	0.0	5.4	0.0	12.4	0.0	12.5	0.0	12.4	0.0	12.8
3	0.0	-0.8	3.2	5.4	12.4	12.4	12.5	12.5	12.4	12.4	12.4	12.8
4	-0.8	0.0	4.1	0.0	12.4	0.0	12.5	0.0	12.4	0.0	12.4	0.0
5	-0.8	0.0	4.1	4.6	12.4	12.4	12.5	12.5	12.4	12.4	12.4	12.8
6	3.1	-4.0	0.0	8.6	12.3	12.3	12.3	12.5	12.3	12.3	12.3	12.7
7	-5.3	4.5	8.6	0.0	12.3	12.3	12.5	12.3	12.3	12.2	12.3	12.6

Scenario:

Scenario 1: @ CTA/Metra connection #1 and #2 closed, @ ComEd circuit #1 and #2 closed. This represents the normal condition.

Scenario 2: @ CTA/Metra connection #1 open and #2 closed, @ ComEd circuit #1 open and #2 closed. This represents an outage of ComEd circuit #1.

Scenario 3: @ CTA/Metra connection #1 and bus tie open and #2 closed, @ ComEd circuit #1 and #2 closed. This represents an outage of CTA/Metra Bus #1.

Scenario 4: @ CTA/Metra connection #1 closed and #2 open, @ ComEd circuit #1 closed and #2 open. This represents an outage of ComEd circuit #2.

Scenario 5: @ CTA/Metra connection #1 closed and #2 and bus tie open, @ ComEd circuit #1 and #2 closed. This represents an outage of CTA/Metra Bus #2.

Scenario 6: @ CTA/Metra connection #1 and #2 closed, @ ComEd circuit #1 open and #2 closed. This represents loss of source for ComEd circuit #1.

Scenario 7: @ CTA/Metra connection #1 and #2 closed, @ ComEd circuit #1 closed and #2 open. This represents loss of source for ComEd circuit #2.

CONFIDENTIAL AND PROPRIETARY - CEII

VV - SUBSTATION

W CYME Study Results

Scenario	@ CTA / Metra -Connection #1 (MVA)	@ CTA / Metra - Connection #2 (MVA)	@ ComEd - Circuit #1 (MVA)	@ ComEd - Circuit #2 (MVA)	@ CTA / Metra - Connection #1 (kV)	@ CTA / Metra - Connection #2 (kV)	@ ComEd - Circuit #1 (kV)	@ ComEd - Circuit #2 (kV)
1	-1.4	-3.4	3.0	3.4	13.0	13.0	13.0	13.0
2	0.0	-4.0	0.0	4.0	0.0	13.0	0.0	13.0
3	0.0	-4.0	3.2	4.0	0.0	13.0	13.0	13.0
4	-4.0	0.0	6.4	0.0	13.0	0.0	13.0	0.0
5	-4.0	0.0	6.4	0.0	13.0	0.0	13.0	13.0
6	3.2	-6.4	0.0	6.4	13.0	13.0	13.0	13.0
7	-4.0	0.0	6.4	0.0	13.0	13.0	13.0	13.0
8								

KV

W Cyme Results Comparison

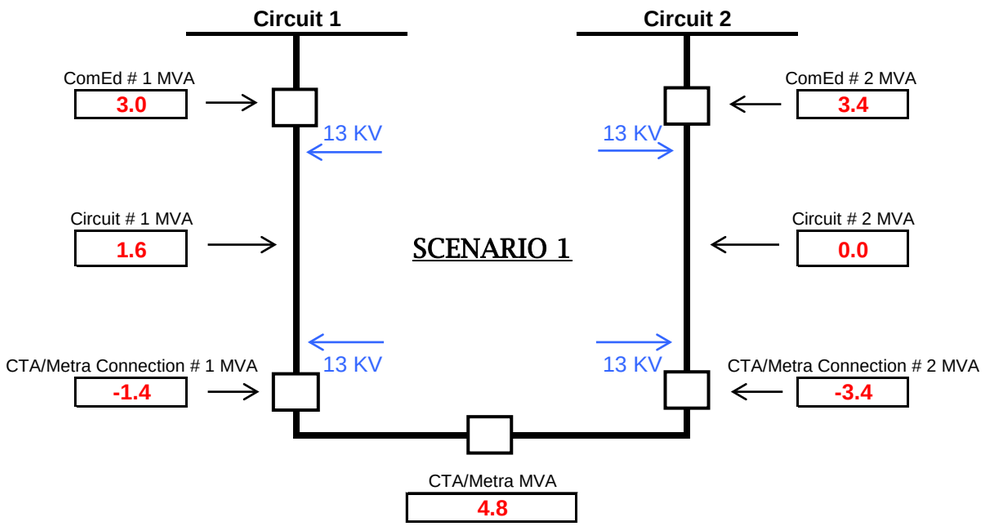

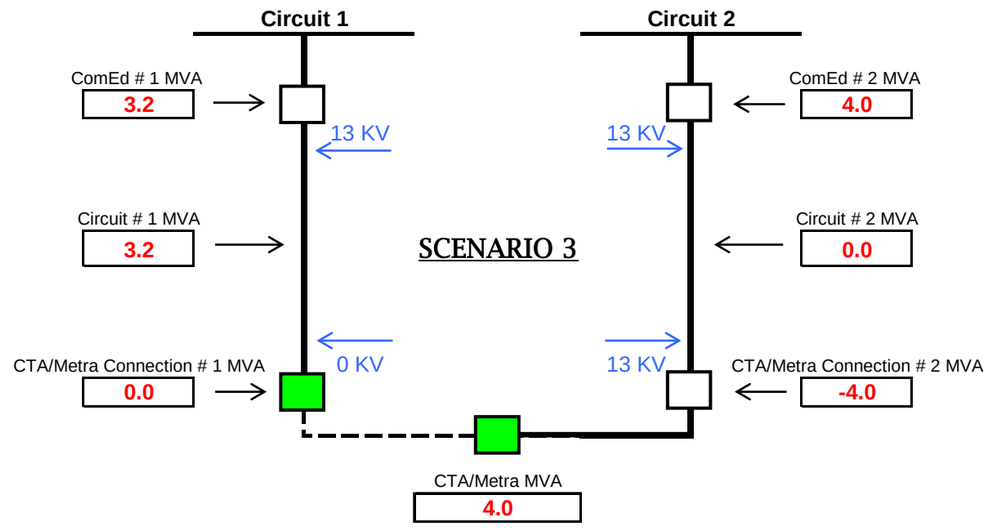

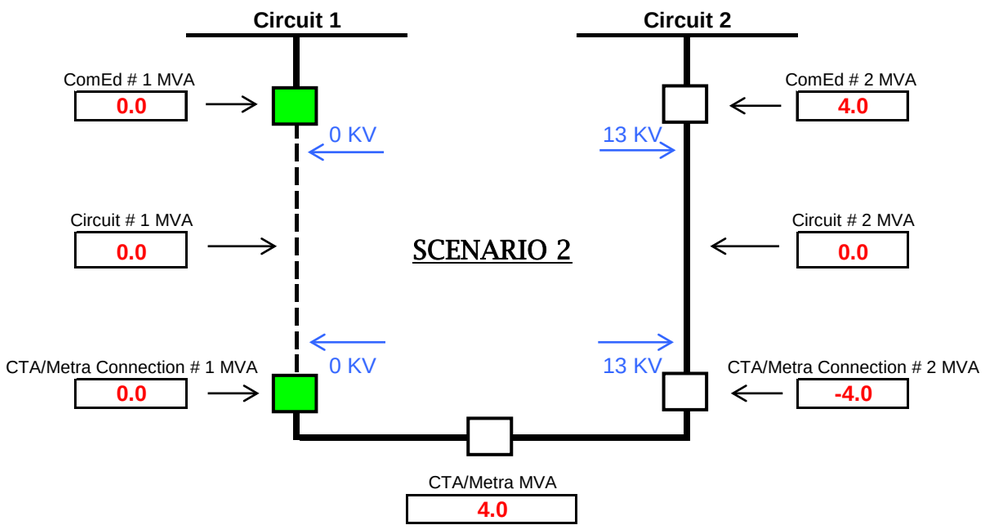

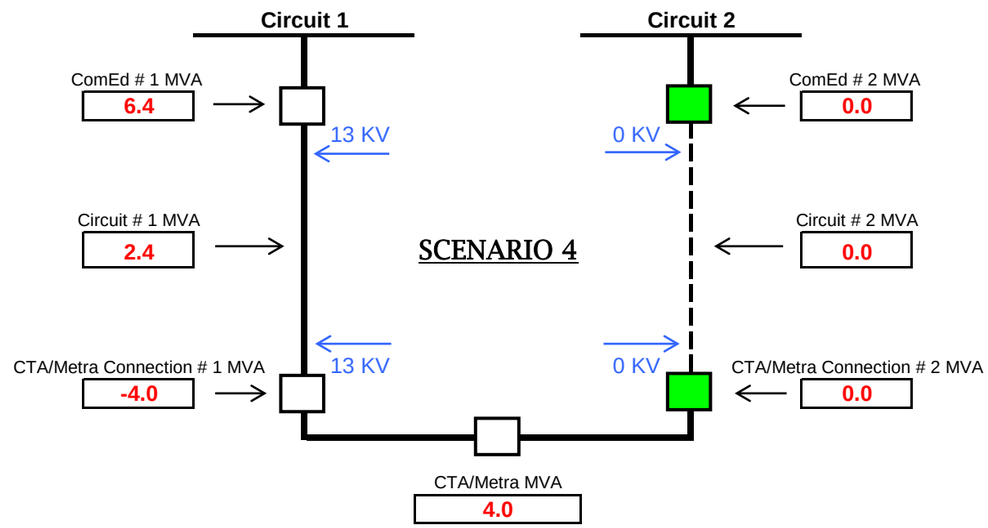

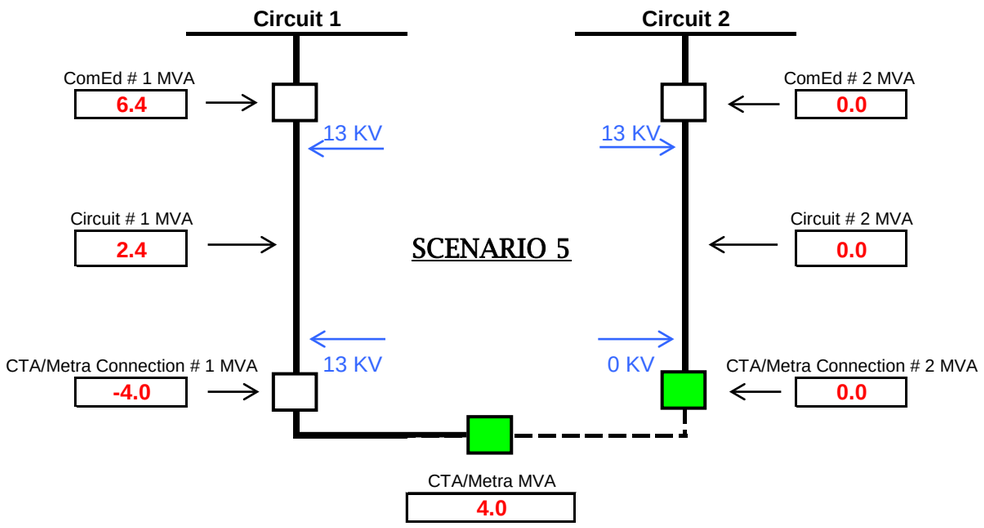
Circuit 1
Circuit 2
ComEd # 1 MVA
6.4
13 KV
13 KV
ComEd # 2 MVA
0.0
Circuit # 1 MVA
2.4
SCENARIO 5
Circuit # 2 MVA
0.0
13 KV
0 KV
CTA/Metra Connection # 1 MVA
-4.0
CTA/Metra Connection # 2 MVA
0.0
CTA/Metra MVA
4.0

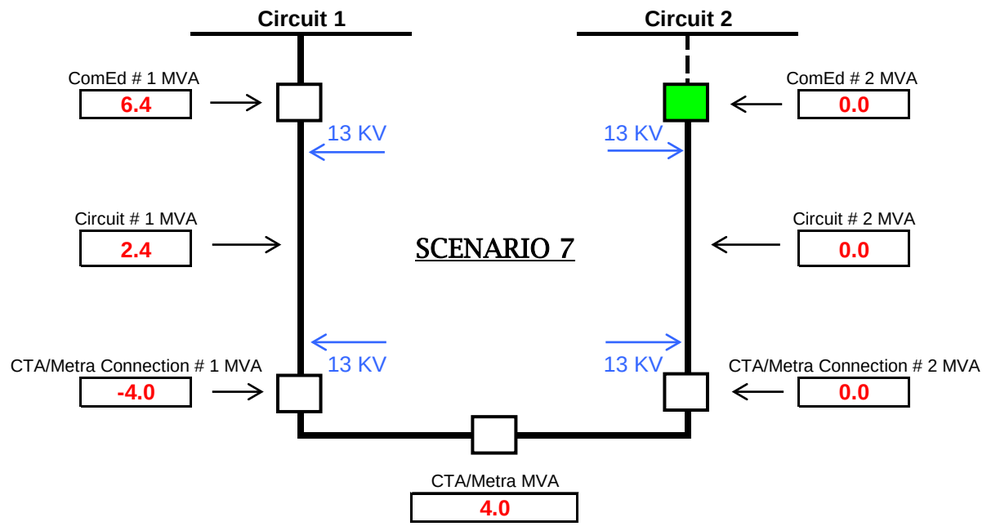
Circuit 1
Circuit 2
ComEd # 1 MVA
6.4
13 KV
13 KV
ComEd # 2 MVA
0.0
Circuit # 1 MVA
2.4
SCENARIO 7
Circuit # 2 MVA
0.0
13 KV
13 KV
CTA/Metra Connection # 1 MVA
-4.0
CTA/Metra Connection # 2 MVA
0.0
CTA/Metra MVA
4.0

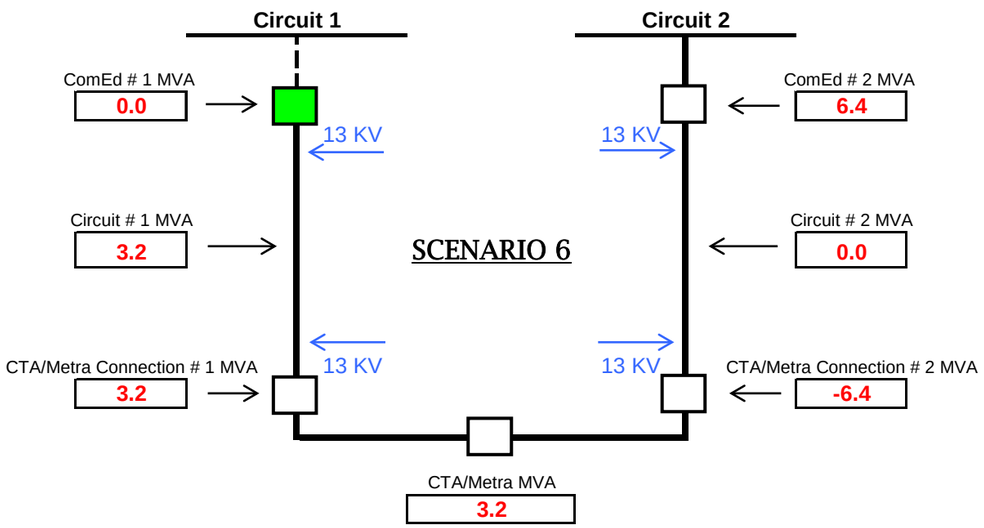
Circuit 1
Circuit 2
ComEd # 1 MVA
0.0
13 KV
13 KV
ComEd # 2 MVA
6.4
Circuit # 1 MVA
3.2
SCENARIO 6
Circuit # 2 MVA
0.0
13 KV
13 KV
CTA/Metra Connection # 1 MVA
3.2
CTA/Metra Connection # 2 MVA
-6.4
CTA/Metra MVA
3.2

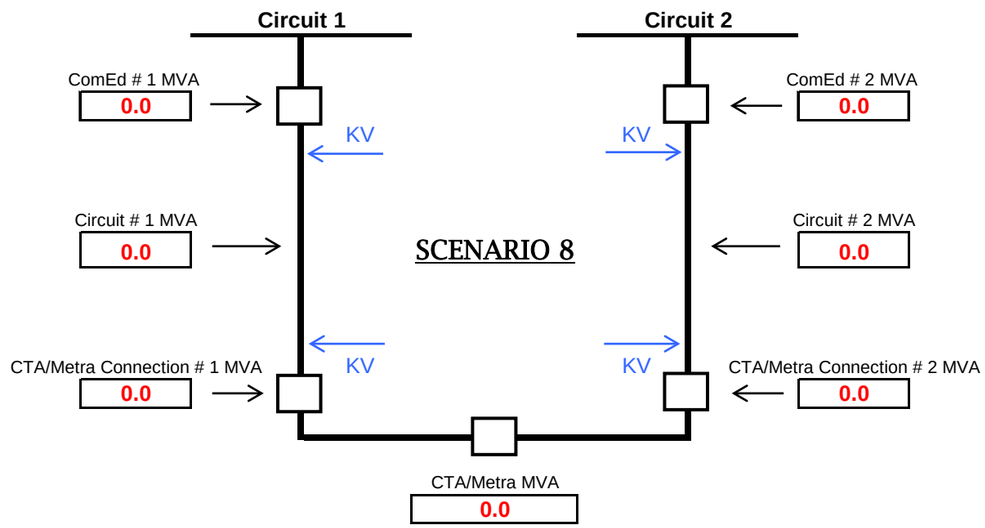
Circuit 1
Circuit 2
ComEd # 1 MVA
0.0
KV
KV
ComEd # 2 MVA
0.0
Circuit # 1 MVA
0.0
SCENARIO 8
Circuit # 2 MVA
0.0
KV
KV
CTA/Metra Connection # 1 MVA
0.0
CTA/Metra Connection # 2 MVA
0.0
CTA/Metra MVA
0.0

W CYME Study Information

- [redacted] substation load obtained from CEDAR for July [redacted] ([redacted] with .[redacted] pf).

- [redacted] APT load information used.
  - [redacted] APT selected load date: [redacted]
  - [redacted] APT actual load on [redacted]
  - [redacted] APT WA on selected load date: [redacted]
  - [redacted] WA load: [redacted]

- [redacted] APT load information used.
  - [redacted] APT selected load date: [redacted]
  - [redacted] APT actual load on [redacted]
  - [redacted] APT WA on selected load date: [redacted]
  - [redacted] WA load: [redacted]

- [redacted] load allocation method
  - Open bus tie at [redacted] substation
  - Allocate [redacted] (Metra load of [redacted] on [redacted] with [redacted] WA) on [redacted].
  - Allocate [redacted] ([redacted] on [redacted] plus [redacted] on [redacted] minus [redacted] at [redacted] substation on [redacted]) on [redacted].
  - Ignore motors.
  - Adjust pf at source ([redacted] pf for [redacted], [redacted] pf for [redacted]) and allocate to obtain an adjusted load PF of [redacted] on both feeders ([redacted] for [redacted], [redacted] for [redacted]).[redacted]
  - Close bus tie at [redacted] substation and run analysis.

- [redacted] midpoint KV taken at overhead section 121701042 and endpoint KV taken at cable section 50954526.

- [redacted] midpoint KV taken at cable section 119524105 and endpoint KV taken at cable section 204812354.

W CYME Study Results

Scenario	@ Metra -Connection #1 (MVA)	@ Metra - Connection #2 (MVA)	@ ComEd - Circuit #1 (MVA)	@ ComEd - Circuit #2 (MVA)	@ Metra -Connection #1 (kV)	@ Metra - Connection #2 (kV)	@ ComEd - Circuit #1 (kV)	@ ComEd - Circuit #2 (kV)	@ ComEd - Circuit #1 Midpoint (kV)	@ ComEd - Circuit #2 Midpoint (kV)	@ ComEd - Circuit #1 Endpoint (kV)	@ ComEd - Circuit #2 Endpoint (kV)
1	-1.4	-3.4	+3.0	+3.4	13.0	13.0	13.0	13.0	12.9	13.0	12.9	13.0
2	0.0	-4.0	0.0	+4.0	0.0	13.0	0.0	13.0	0.0	13.0	0.0	13.0
3	0.0	-4.0	+3.2	+4.0	0.0	13.0	13.0	13.0	13.0	13.0	12.9	13.0
4	-4.0	0.0	+6.4	0.0	13.0	0.0	13.0	0.0	12.9	0.0	12.9	0.0
5	-4.0	0.0	+6.4	0.0	13.0	0.0	13.0	13.0	12.9	13.0	12.9	13.0
6	+3.2	-6.4	0.0	+6.4	13.0	13.0	13.0	13.0	12.9	13.0	12.9	13.0
7	-4.0	0.0	+6.4	0.0	13.0	13.0	13.0	13.0	12.9	13.0	12.9	13.0

Scenario:

Scenario 1: @ CTA/Metra connection #1 and #2 closed, @ ComEd circuit #1 and #2 closed. This represents the normal condition.

Scenario 2: @ CTA/Metra connection #1 open and #2 closed, @ ComEd circuit #1 open and #2 closed. This represents an outage of ComEd circuit #1.

Scenario 3: @ CTA/Metra connection #1 and bus tie open and #2 closed, @ ComEd circuit #1 and #2 closed. This represents an outage of CTA/Metra Bus #1.

Scenario 4: @ CTA/Metra connection #1 closed and #2 open, @ ComEd circuit #1 closed and #2 open. This represents an outage of ComEd circuit #2.

Scenario 5: @ CTA/Metra connection #1 closed and #2 and bus tie open, @ ComEd circuit #1 and #2 closed. This represents an outage of CTA/Metra Bus #2.

Scenario 6: @ CTA/Metra connection #1 and #2 closed, @ ComEd circuit #1 open and #2 closed. This represents loss of source for ComEd circuit #1.

Scenario 7: @ CTA/Metra connection #1 and #2 closed, @ ComEd circuit #1 closed and #2 open. This represents loss of source for ComEd circuit #2.

CONFIDENTIAL AND PROPRIETARY - CEII

W SUBSTATION

WW CTA CYME Study Results

Scenario	@ CTA / Metra - Connection #1 (MVA)	@ CTA / Metra - Connection #2 (MVA)	@ ComEd - Circuit #1 (MVA)	@ ComEd - Circuit #2 (MVA)	@ CTA / Metra - Connection #1 (kV)	@ CTA / Metra - Connection #2 (kV)	@ ComEd - Circuit #1 (kV)	@ ComEd - Circuit #2 (kV)
1	-0.7	-0.9	4.4	4.6	12.8	12.8	13.0	13.0
2	0.0	-1.1	0.0	5.0	0.0	12.7	0.0	13.0
3	0.0	-1.1	4.2	5.0	12.8	12.7	13.0	13.0
4	-1.1	0.0	5.3	0.0	12.8	0.0	13.0	0.0
5	-1.1	0.0	5.3	3.9	12.8	12.8	13.0	13.0
6	4.0	-5.0	0.0	9.2	12.5	12.5	12.4	13.0
7	-4.8	3.7	9.2	0.0	12.5	12.5	13.0	12.4
8								

KV

WW CTA Cyme Results Comparison

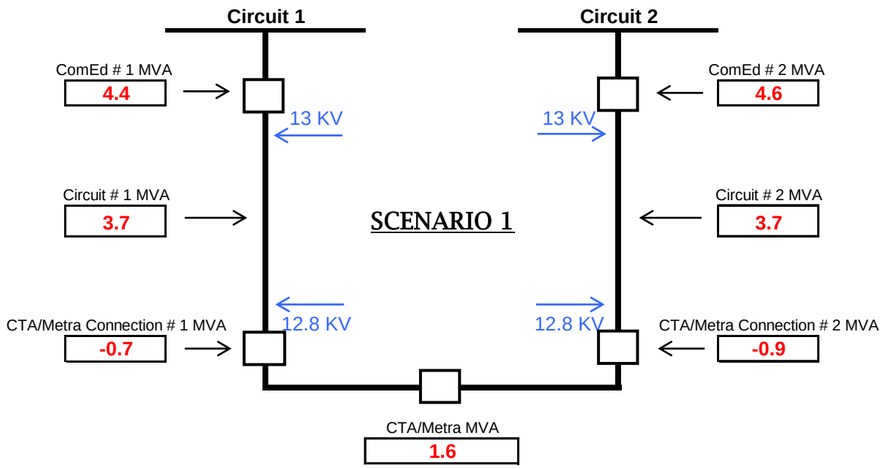

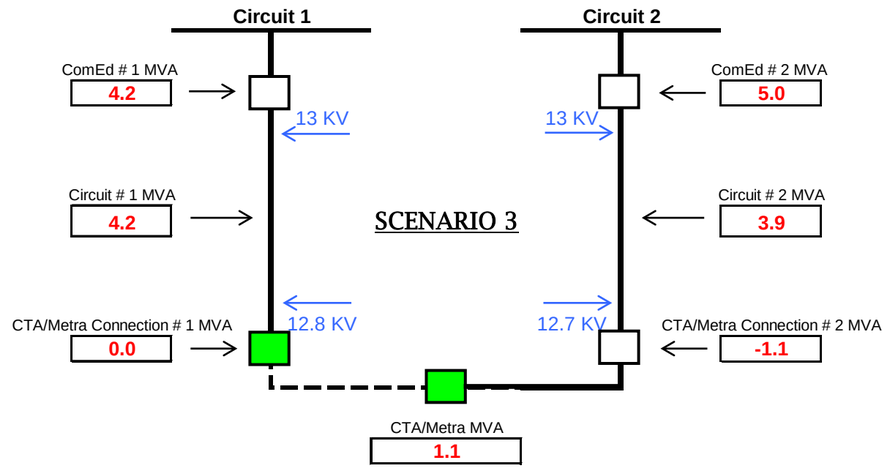

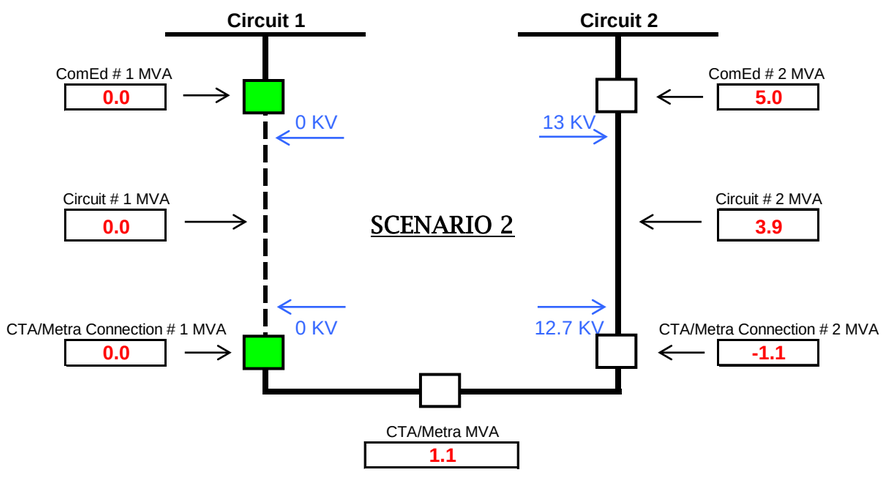

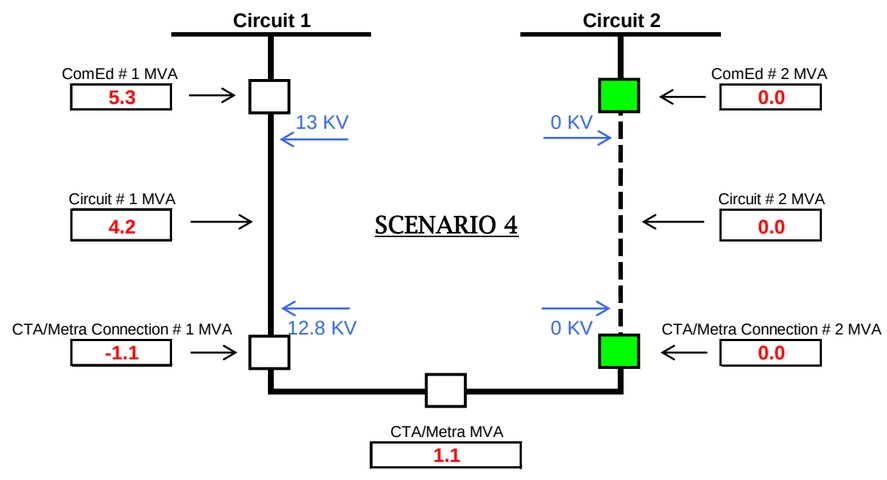

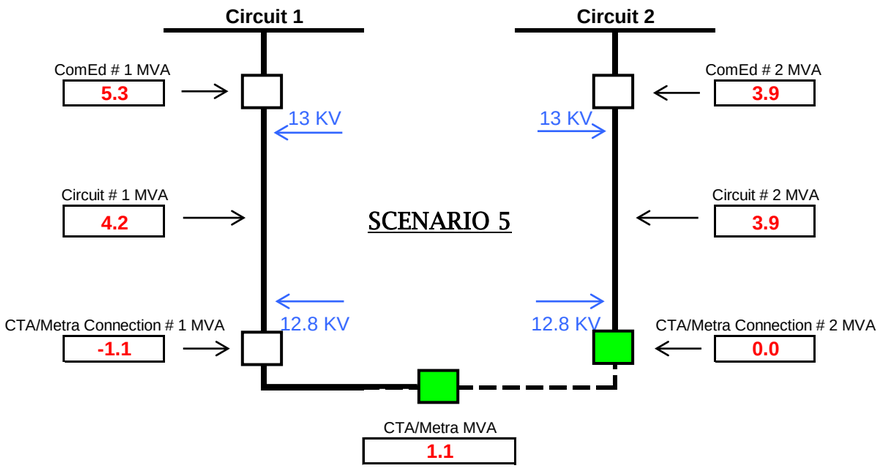
Circuit 1
Circuit 2
ComEd # 1 MVA
5.3
ComEd # 2 MVA
3.9
13 KV
13 KV
Circuit # 1 MVA
4.2
SCENARIO 5
Circuit # 2 MVA
3.9
CTA/Metra Connection # 1 MVA
-1.1
12.8 KV
12.8 KV
CTA/Metra Connection # 2 MVA
0.0
CTA/Metra MVA
1.1

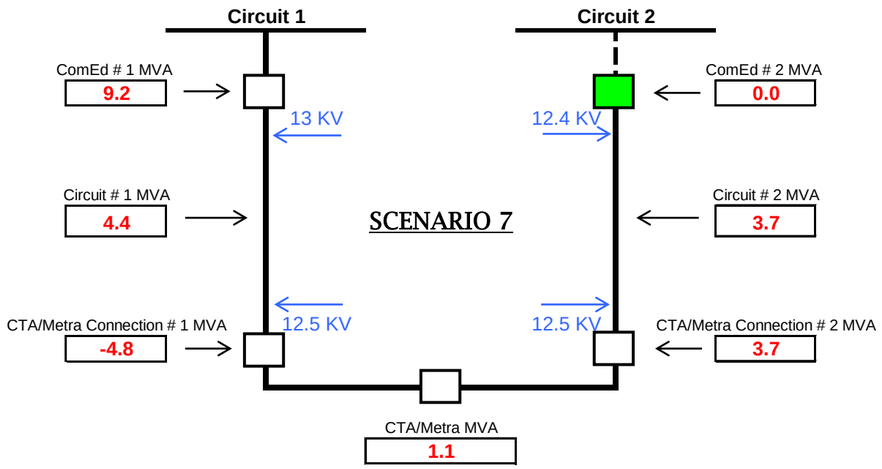
Circuit 1
Circuit 2
ComEd # 1 MVA
9.2
ComEd # 2 MVA
0.0
13 KV
12.4 KV
Circuit # 1 MVA
4.4
SCENARIO 7
Circuit # 2 MVA
3.7
CTA/Metra Connection # 1 MVA
-4.8
12.5 KV
12.5 KV
CTA/Metra Connection # 2 MVA
3.7
CTA/Metra MVA
1.1

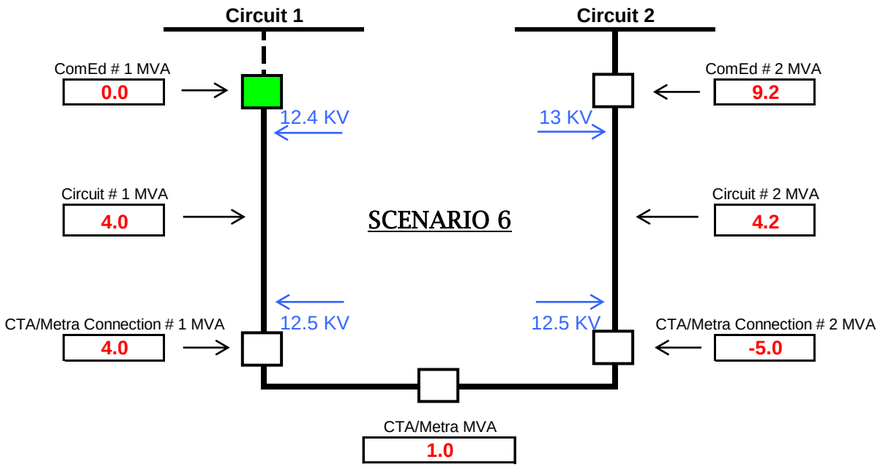
Circuit 1
Circuit 2
ComEd # 1 MVA
0.0
ComEd # 2 MVA
9.2
12.4 KV
13 KV
Circuit # 1 MVA
4.0
SCENARIO 6
Circuit # 2 MVA
4.2
CTA/Metra Connection # 1 MVA
4.0
12.5 KV
12.5 KV
CTA/Metra Connection # 2 MVA
-5.0
CTA/Metra MVA
1.0

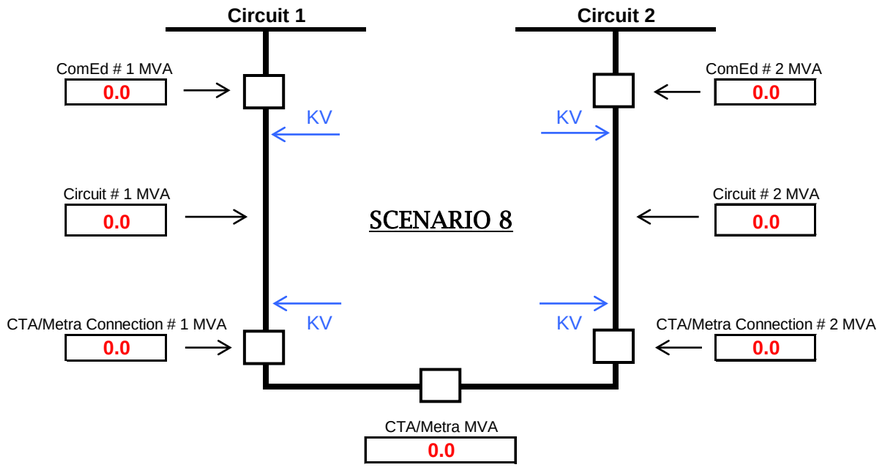
Circuit 1
Circuit 2
ComEd # 1 MVA
0.0
ComEd # 2 MVA
0.0
KV
KV
Circuit # 1 MVA
0.0
SCENARIO 8
Circuit # 2 MVA
0.0
CTA/Metra Connection # 1 MVA
0.0
KV
KV
CTA/Metra Connection # 2 MVA
0.0
CTA/Metra MVA
0.0

WW CTA CYME Study Information

- [redacted], [redacted], assumed load demand [redacted]kW at PF=[redacted] (From load information provided by CIMS, Cedar).
- [redacted], [redacted] assumed load demand [redacted]kW at PF=[redacted] (From load information provided by LCS).
- [redacted], [redacted], assumed load demand [redacted]kW at PF=[redacted] (From load information provided by LCS).
- [redacted] ([redacted]) substation load was obtained from Cedar Loads. Peak load for each feeding line is [redacted]kW, with assumed PF=[redacted].

- [redacted] APT load information used.
  - [redacted] APT selected load date: [redacted]
  - [redacted] APT actual load on [redacted]: [redacted]A/[redacted]A/[redacted]A ➔ [redacted]A
  - [redacted] APT WA on selected load date: [redacted]
  - [redacted] WA load: [redacted]A/[redacted]A/[redacted]A ➔ [redacted]A
- [redacted] APT load information used.
  - [redacted] APT selected load date: [redacted]
  - [redacted] APT actual load on [redacted]: [redacted]A/[redacted]A/[redacted]A ➔ [redacted]A
  - [redacted] APT WA on selected load date: [redacted]
  - [redacted] WA load: [redacted]A/[redacted]A/[redacted]A➔ [redacted]A
- [redacted] APT load information used.
  - [redacted] APT selected load date: [redacted]
  - [redacted] APT actual load on [redacted]: [redacted]A/[redacted]A/[redacted]A ➔ [redacted]A
  - [redacted] APT WA on selected load date: [redacted]
  - [redacted] WA load: [redacted]A/[redacted]A/[redacted]A ➔ [redacted]A

- [redacted] load allocation method
  - Validate in the CYME model all transformers, ESS loads, including [redacted] kVA for each feeding line at [redacted] per Cedar meter information.
  - Open CTA bus tie breaker, (i.e., assumed zero point of the network). This allowed for proper load allocation on the feeders.
  - Power factor of [redacted]% for [redacted] and [redacted]% for [redacted] were used during allocation so as to obtain an adjusted load PF of [redacted]– [redacted]% on all feeders.
  - Ignore motors.
  - Open zero-point CTA bus tie breaker and allocate the loads.
  - Close zero-point and run analysis.

- Physical midpoint kV on feeder [redacted] is taken at section [redacted] and the endpoint kV is taken at section [redacted].
- Physical midpoint kV on feeder [redacted] is taken at section [redacted] and the endpoint kV is taken at section [redacted].

WW CTA CYME Study Results

Scenario	@ CTA -Connection #1 (MVA)	@ CTA - Connection #2 (MVA)	@ ComEd - Circuit #1 (MVA)	@ ComEd - Circuit #2 (MVA)	@ CTA -Connection #1 (kV)	@ CTA - Connection #2 (kV)	@ ComEd - Circuit #1 (kV)	@ ComEd - Circuit #2 (kV)	@ ComEd - Circuit #1 Midpoint (kV)	@ ComEd - Circuit #2 Midpoint (kV)	@ ComEd - Circuit #1 Endpoint (kV)	@ ComEd - Circuit #2 Endpoint (kV)
1	-0.7	-0.9	4.4	4.6	12.8	12.8	13.0	13.0	12.8	12.8	12.8	12.8
2	0	-1.1	0	5.0	0	12.7	0	13.0	0	12.8	0	12.7
3	0	-1.1	4.2	5.0	12.8	12.7	13.0	13.0	12.8	12.8	12.8	12.7
4	-1.1	0	5.3	0	12.8	0	13.0	0	12.8	0	12.8	0
5	-1.1	0	5.3	3.9	12.8	12.8	13.0	13.0	12.8	12.8	12.8	12.8
6	4.0	-5.0	0	9.2	12.5	12.5	12.4	13.0	12.4	12.6	12.4	12.5
7	-4.8	3.7	9.2	0	12.5	12.5	13.0	12.4	12.6	12.4	12.6	12.5

Scenario:

Scenario 1: @ CTA/Metra connection #1 and #2 closed, @ ComEd circuit #1 and #2 closed. This represents the normal condition.

Scenario 2: @ CTA/Metra connection #1 open and #2 closed, @ ComEd circuit #1 open and #2 closed. This represents an outage of ComEd circuit #1.

Scenario 3: @ CTA/Metra connection #1 and bus tie open and #2 closed, @ ComEd circuit #1 and #2 closed. This represents an outage of CTA/Metra Bus #1.

Scenario 4: @ CTA/Metra connection #1 closed and #2 open, @ ComEd circuit #1 closed and #2 open. This represents an outage of ComEd circuit #2.

Scenario 5: @ CTA/Metra connection #1 closed and #2 and bus tie open, @ ComEd circuit #1 and #2 closed. This represents an outage of CTA/Metra Bus #2.

Scenario 6: @ CTA/Metra connection #1 and #2 closed, @ ComEd circuit #1 open and #2 closed. This represents loss of source for ComEd circuit #1.

Scenario 7: @ CTA/Metra connection #1 and #2 closed, @ ComEd circuit #1 closed and #2 open. This represents loss of source for ComEd circuit #2.

CONFIDENTIAL AND PROPRIETARY - CEII

WW SUBSTATION

X CYME Study Results

Scenario	@ CTA / Metra -Connection #1 (MVA)	@ CTA / Metra - Connection #2 (MVA)	@ ComEd - Circuit #1 (MVA)	@ ComEd - Circuit #2 (MVA)	@ CTA / Metra - Connection #1 (kV)	@ CTA / Metra - Connection #2 (kV)	@ ComEd - Circuit #1 (kV)	@ ComEd - Circuit #2 (kV)
1	-1.5	-1.1	3.4	4.7	12.8	12.8	13.0	13.0
2	0.0	-2.7	0.0	6.2	0.0	12.6	0.0	13.0
3	0.0	-2.7	2.3	6.2	12.9	12.6	13.0	13.0
4	-2.7	0.0	4.5	0.0	12.6	0.0	13.0	0.0
5	-2.7	0.0	4.5	3.7	12.6	12.9	13.0	13.0
6	2.2	-4.4	0.0	8.3	12.5	12.5	12.6	13.0
7	-6.1	3.7	8.4	0.0	12.4	12.4	13.0	12.3
8								

KV

X Cyme Results Comparison

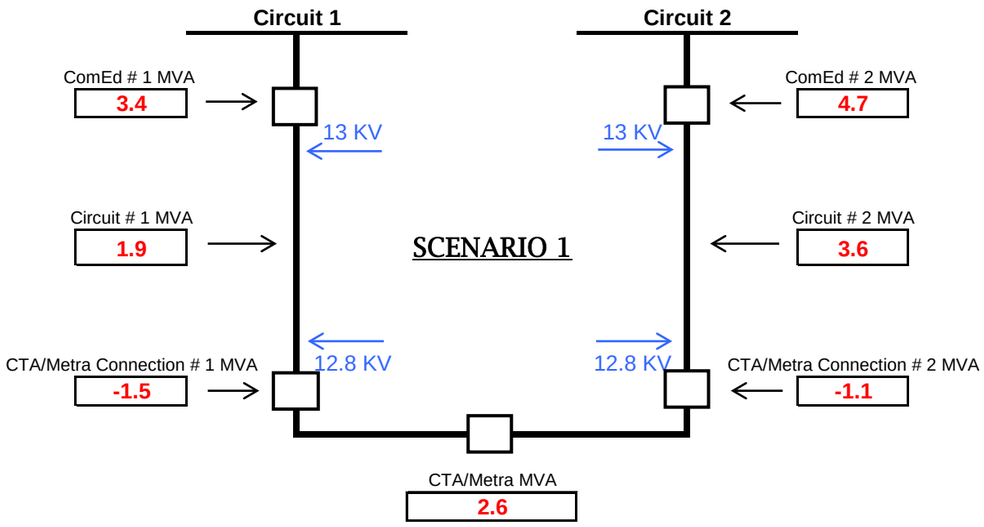

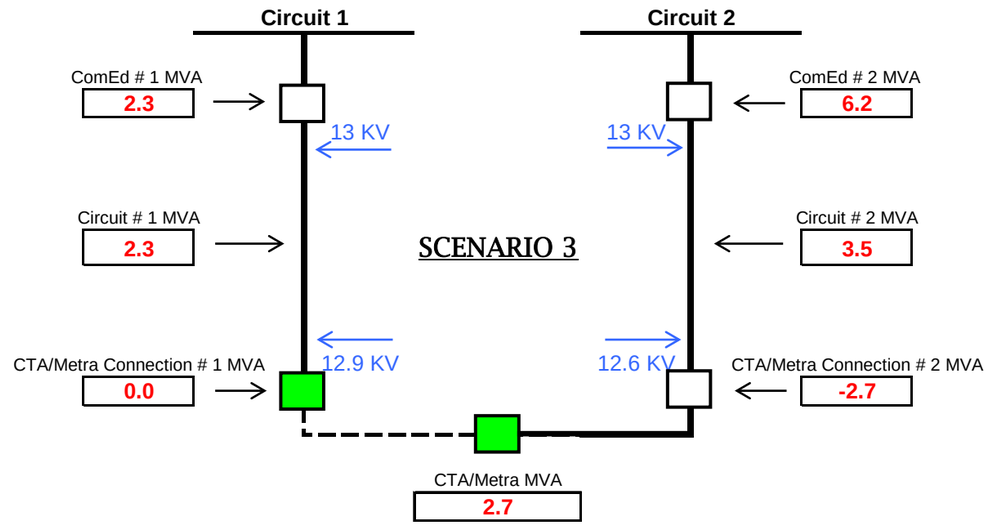

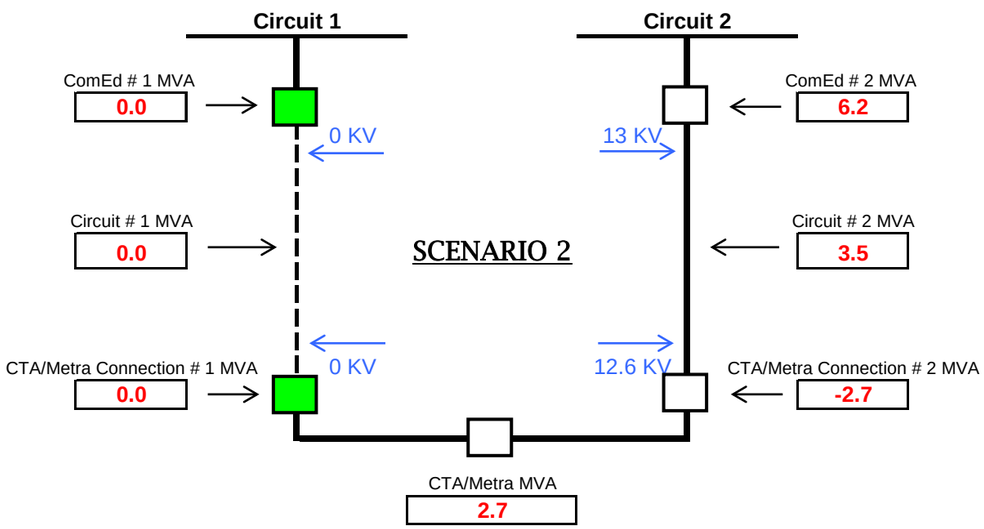

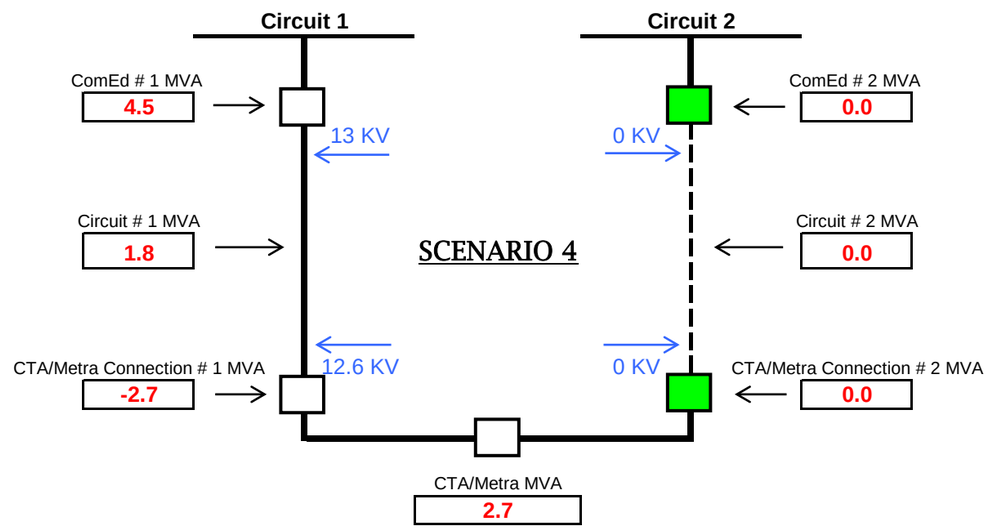

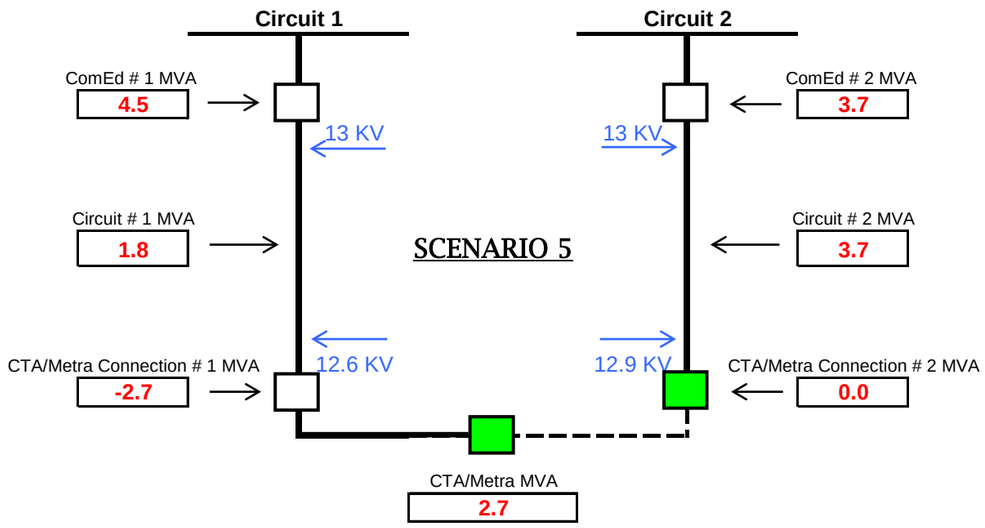
Circuit 1
Circuit 2
ComEd # 1 MVA
4.5
13 KV
13 KV
ComEd # 2 MVA
3.7
Circuit # 1 MVA
1.8
SCENARIO 5
Circuit # 2 MVA
3.7
CTA/Metra Connection # 1 MVA
-2.7
12.6 KV
12.9 KV
CTA/Metra Connection # 2 MVA
0.0
CTA/Metra MVA
2.7

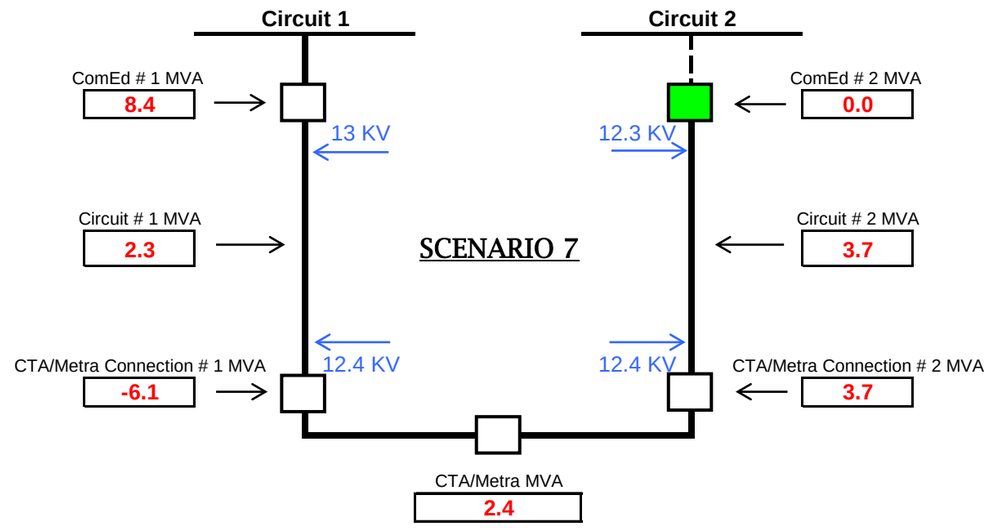
Circuit 1
Circuit 2
ComEd # 1 MVA
8.4
13 KV
12.3 KV
ComEd # 2 MVA
0.0
Circuit # 1 MVA
2.3
SCENARIO 7
Circuit # 2 MVA
3.7
CTA/Metra Connection # 1 MVA
-6.1
12.4 KV
12.4 KV
CTA/Metra Connection # 2 MVA
3.7
CTA/Metra MVA
2.4

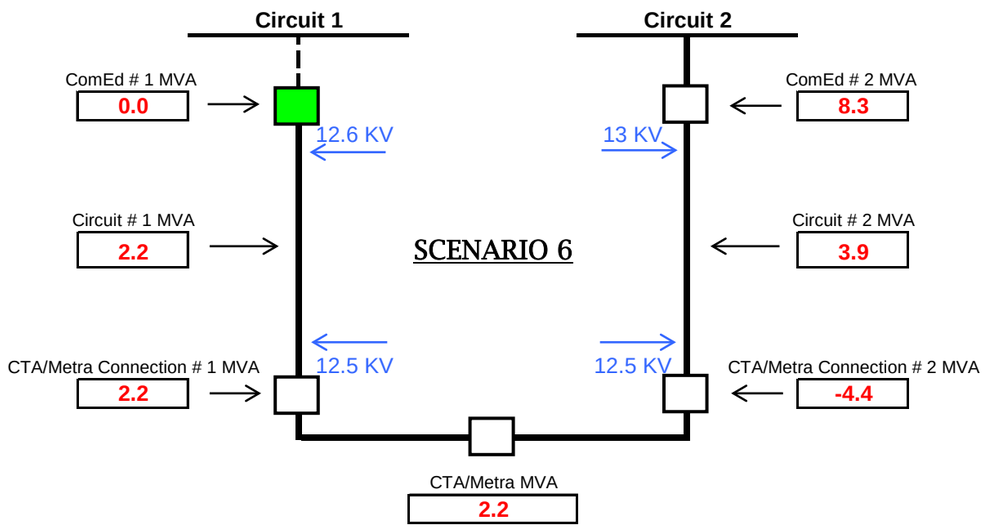
Circuit 1
Circuit 2
ComEd # 1 MVA
0.0
12.6 KV
13 KV
ComEd # 2 MVA
8.3
Circuit # 1 MVA
2.2
SCENARIO 6
Circuit # 2 MVA
3.9
CTA/Metra Connection # 1 MVA
2.2
12.5 KV
12.5 KV
CTA/Metra Connection # 2 MVA
-4.4
CTA/Metra MVA
2.2

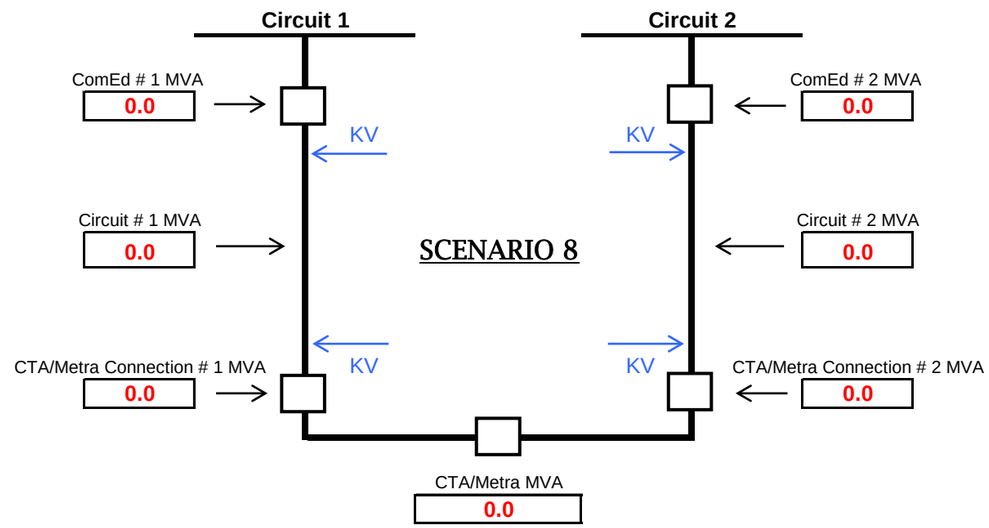
Circuit 1
Circuit 2
ComEd # 1 MVA
0.0
KV
KV
ComEd # 2 MVA
0.0
Circuit # 1 MVA
0.0
SCENARIO 8
Circuit # 2 MVA
0.0
CTA/Metra Connection # 1 MVA
0.0
KV
KV
CTA/Metra Connection # 2 MVA
0.0
CTA/Metra MVA
0.0

X CYME Study Information

- [redacted] used loads of [redacted] for each point of service.

- On feeder [redacted] TR# [redacted] is a [redacted] single phase transformer on "[redacted]" phase with a load of [redacted], left [redacted] on this transformer. Transferred [redacted] to tr#[redacted], [redacted] to tr#[redacted] and [redacted] to tr# [redacted] . All this load belongs to [redacted], the transformer's that load was transferred to are serving the [redacted] on feeder [redacted] not [redacted].

- [redacted] substation load obtained from Cedar for [redacted] (KW with [redacted] pf).

- [redacted] APT load information used.
  - [redacted] APT selected load date: [redacted]
  - [redacted] APT actual load on [redacted]
  - [redacted] APT WA on selected load date: [redacted]
  - [redacted] WA load: [redacted]

- [redacted] APT load information used.
  - [redacted] APT selected load date: [redacted]
  - [redacted] APT actual load on [redacted]
  - [redacted] APT WA on selected load date: [redacted]
  - [redacted] WA load: [redacted]

- [redacted] load allocation method
  - Open bus tie at [redacted] substation [redacted].
  - Increased [redacted] by [redacted] and reduced [redacted] by [redacted] to compensate for flow at zero point at bus tie breaker.
  - Allocate [redacted] with [redacted] pf on [redacted].
  - Allocate [redacted] with [redacted] pf on [redacted].
  - .Ignore motors and shunt capacitors.
  - Close bus tie at University substation and run analysis.

- Feeder [redacted] mid point is Ovhd section #132210113 & end point is urd cbl [redacted] at section #167064415

- Feeder [redacted] mid point is Ovhd section #50519977 & end point is on the Ovhd at section #50536987

X CYME Study Results

Scenario	@ CTA -Connection #1 (MVA)	@ CTA - Connection #2 (MVA)	@ ComEd - Circuit #1 (MVA)	@ ComEd - Circuit #2 (MVA)	@ CTA -Connection #1 (kV)	@ CTA - Connection #2 (kV)	@ ComEd - Circuit #1 (kV)	@ ComEd - Circuit #2 (kV)	@ ComEd - Circuit #1 Midpoint (kV)	@ ComEd - Circuit #2 Midpoint (kV)	@ ComEd - Circuit #1 Endpoint (kV)	@ ComEd - Circuit #2 Endpoint (kV)
1	-1.5	-1.1	+3.4	+4.7	12.8	12.8	13.0	13.0	12.9	12.8	12.7	12.8
2	0.0	-2.7	0.0	+6.2	0.0	12.6	0.0	13.0	0.0	12.7	0.0	12.6
3	0.0	-2.7	+2.3	+6.2	12.9	12.6	13.0	13.0	13.0	12.7	12.8	12.6
4	-2.7	0.0	+4.5	0.0	12.6	0.0	13.0	0.0	12.9	0.0	12.6	0.0
5	-2.7	0.0	+4.5	+3.7	12.6	12.9	13.0	13.0	12.9	12.9	12.6	12.9
6	+2.2	-4.4	0.0	+8.3	12.5	12.5	12.6	13.0	12.6	12.7	12.4	12.5
7	-6.1	+3.7	+8.4	0.0	12.4	12.4	13.0	12.3	12.8	12.3	12.4	12.4

Scenario:

Scenario 1: @ CTA/Metra connection #1 and #2 closed, @ ComEd circuit #1 and #2 closed. This represents the normal condition.

Scenario 2: @ CTA/Metra connection #1 open and #2 closed, @ ComEd circuit #1 open and #2 closed. This represents an outage of ComEd circuit #1.

Scenario 3: @ CTA/Metra connection #1 and bus tie open and #2 closed, @ ComEd circuit #1 and #2 closed. This represents an outage of CTA/Metra Bus #1.

Scenario 4: @ CTA/Metra connection #1 closed and #2 open, @ ComEd circuit #1 closed and #2 open. This represents an outage of ComEd circuit #2.

Scenario 5: @ CTA/Metra connection #1 closed and #2 and bus tie open, @ ComEd circuit #1 and #2 closed. This represents an outage of CTA/Metra Bus #2.

Scenario 6: @ CTA/Metra connection #1 and #2 closed, @ ComEd circuit #1 open and #2 closed. This represents loss of source for ComEd circuit #1.

Scenario 7: @ CTA/Metra connection #1 and #2 closed, @ ComEd circuit #1 closed and #2 open. This represents loss of source for ComEd circuit #2.

CONFIDENTIAL AND PROPRIETARY - CEII

X SUBSTATION

Z CYME Study Results

Scenario	@ CTA / Metra -Connection #1 (MVA)	@ CTA / Metra - Connection #2 (MVA)	@ ComEd - Circuit #1 (MVA)	@ ComEd - Circuit #2 (MVA)	@ CTA / Metra - Connection #1 (kV)	@ CTA / Metra - Connection #2 (kV)	@ ComEd - Circuit #1 (kV)	@ ComEd - Circuit #2 (kV)
1	-4.7	0.8	4.8	5.2	12.4	12.4	12.4	12.4
2	0	-4.0	0	10.1	0	12.2	0	12.3
3	0	-4.0	0	10.1	12.5	12.2	12.5	12.3
4	-4.0	0	4.1	0	12.4	0	12.4	0
5	-4.0	0	4.1	5.9	12.4	12.4	12.4	12.4
6	0	-4.0	0	10.1	12.2	12.2	12.2	12.3
7	-9.9	5.9	10.1	0	12.2	12.2	12.3	12.2
8								

Z CYME Results Comparison

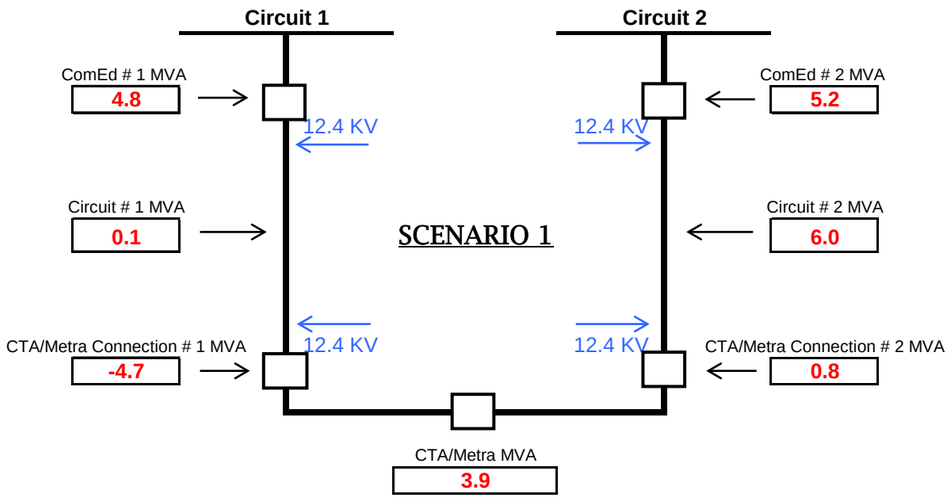

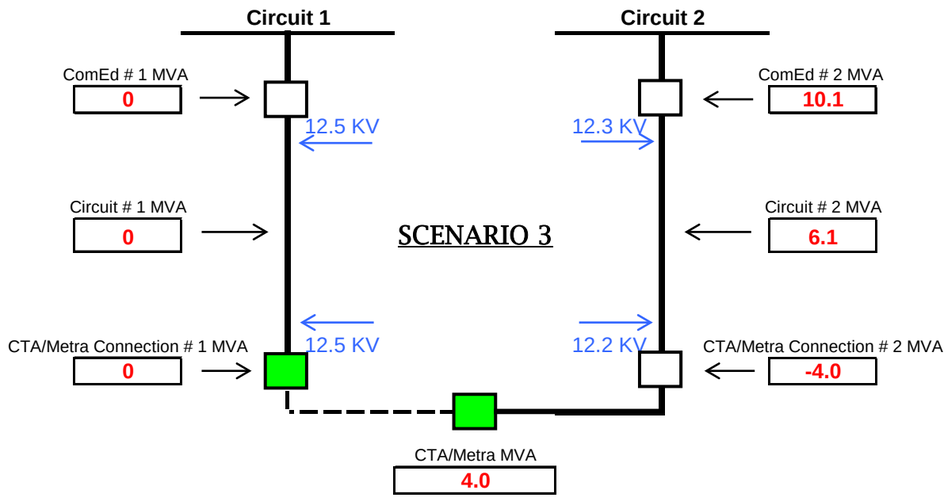

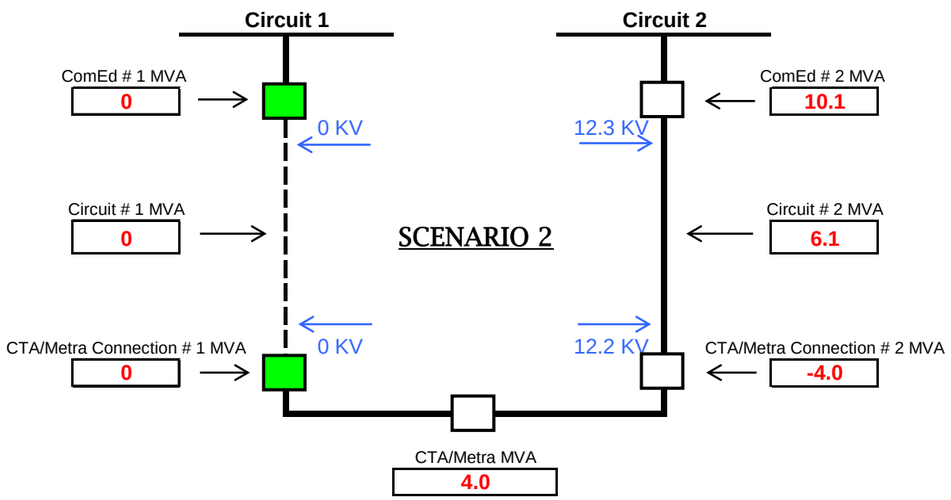

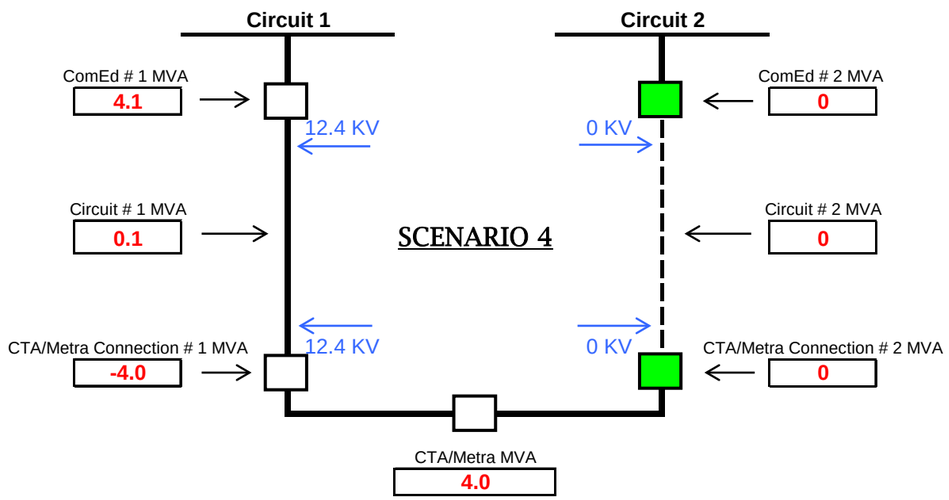

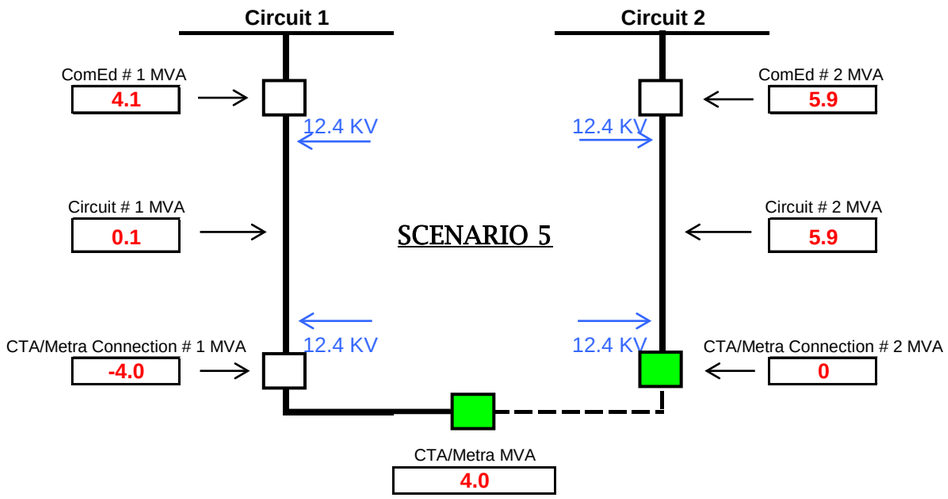
Circuit 1
Circuit 2
ComEd # 1 MVA
4.1
ComEd # 2 MVA
5.9
12.4 KV
12.4 KV
Circuit # 1 MVA
0.1
SCENARIO 5
Circuit # 2 MVA
5.9
CTA/Metra Connection # 1 MVA
-4.0
12.4 KV
12.4 KV
CTA/Metra Connection # 2 MVA
0
CTA/Metra MVA
4.0

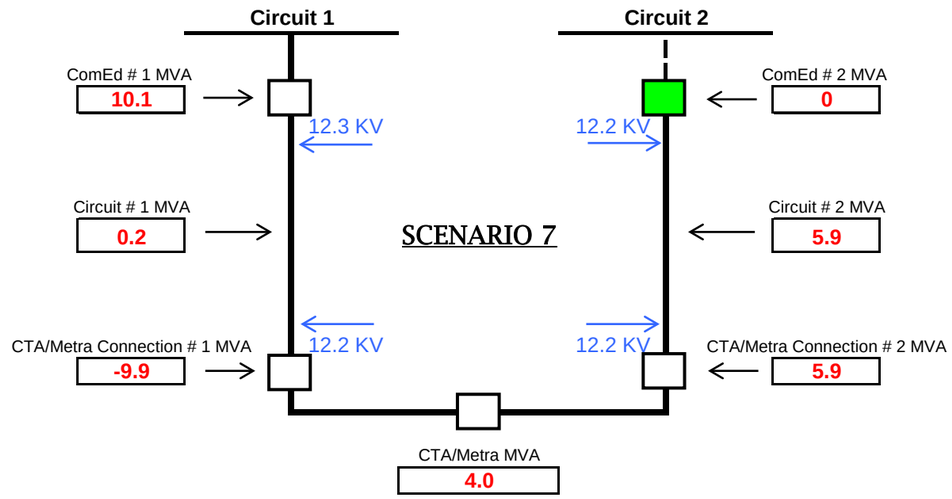
Circuit 1
Circuit 2
ComEd # 1 MVA
10.1
ComEd # 2 MVA
0
12.3 KV
12.2 KV
Circuit # 1 MVA
0.2
SCENARIO 7
Circuit # 2 MVA
5.9
CTA/Metra Connection # 1 MVA
-9.9
12.2 KV
12.2 KV
CTA/Metra Connection # 2 MVA
5.9
CTA/Metra MVA
4.0

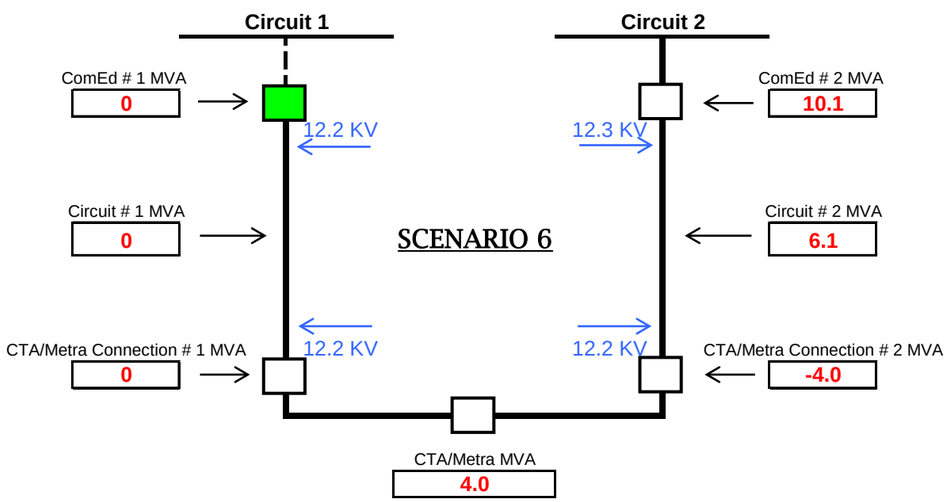
Circuit 1
Circuit 2
ComEd # 1 MVA
0
ComEd # 2 MVA
10.1
12.2 KV
12.3 KV
Circuit # 1 MVA
0
SCENARIO 6
Circuit # 2 MVA
6.1
CTA/Metra Connection # 1 MVA
0
12.2 KV
12.2 KV
CTA/Metra Connection # 2 MVA
-4.0
CTA/Metra MVA
4.0

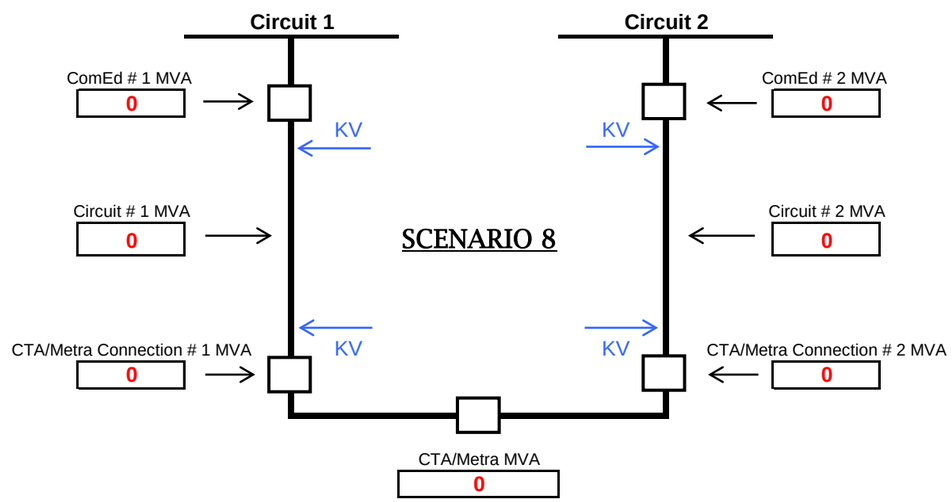
Circuit 1
Circuit 2
ComEd # 1 MVA
0
ComEd # 2 MVA
0
KV
KV
Circuit # 1 MVA
0
SCENARIO 8
Circuit # 2 MVA
0
CTA/Metra Connection # 1 MVA
0
KV
KV
CTA/Metra Connection # 2 MVA
0
CTA/Metra MVA
0

Z CYME Study Information

- [redacted] substation load obtained from CEDAR for [redacted] ([redacted]KW with [redacted] pf for each line).

- [redacted] thru [redacted] at [redacted] obtained from Hyperion for [redacted] via primary [redacted] ([redacted]KVA with [redacted]pf).

- [redacted]ohm inductors added to both lines.

- [redacted] APT load information used.
  - [redacted] APT selected load date: [redacted].
  - [redacted] APT actual load on [redacted]: [redacted]A
  - [redacted] APT WA on selected load date: [redacted]
  - [redacted] WA load: [redacted]A

- [redacted] APT load information used.
  - [redacted] APT selected load date: [redacted].
  - [redacted] APT actual load on [redacted]: [redacted]A
  - [redacted] APT WA on selected load date: [redacted]
  - [redacted] WA load: [redacted]A

- [redacted] load allocation method
  - Open [redacted] breaker at [redacted] substation.
  - Allocate [redacted]A ([redacted]A plus [redacted]A) on [redacted].
  - Allocate [redacted]A ([redacted]A minus [redacted]A) on [redacted].
  - [redacted]A is the [redacted]A of flow from [redacted] with [redacted] WA at the zero point prior to radial load allocation.
  - Ignore motors.
  - Adjust pf at source [redacted]pf for [redacted] and [redacted]pf for [redacted]) and allocate to obtain an adjusted load PF of [redacted] – [redacted]% on both feeders ([redacted] for [redacted] and [redacted] for [redacted]).
  - Close [redacted] breaker at [redacted] substation and run analysis.

- [redacted] midpoint KV taken at cable section 389376604 and endpoint KV taken at cable section 716383122.

- [redacted] midpoint KV taken at cable section 438185968 and endpoint KV taken at cable section 438287055.

Z CYME Study Results

Scenario	@ CTA -Connection #1 (MVA)	@ CTA - Connection #2 (MVA)	@ ComEd - Circuit #1 (MVA)	@ ComEd - Circuit #2 (MVA)	@ CTA -Connection #1 (kV)	@ CTA - Connection #2 (kV)	@ ComEd - Circuit #1 (kV)	@ ComEd - Circuit #2 (kV)	@ ComEd - Circuit #1 Midpoint (kV)	@ ComEd - Circuit #2 Midpoint (kV)	@ ComEd - Circuit #1 Endpoint (kV)	@ ComEd - Circuit #2 Endpoint (kV)
1	-4.7	+0.8	+4.8	+5.2	12.4	12.4	12.4	12.4	12.4	12.3	12.4	12.3
2	0	-4.0	0	+10.1	0	12.2	0	12.3	0	12.2	0	12.2
3	0	-4.0	0	+10.1	12.5	12.2	12.5	12.3	12.5	12.2	12.5	12.2
4	-4.0	0	+4.1	0	12.4	0	12.4	0	12.4	0	12.4	0
5	-4.0	0	+4.1	+5.9	12.4	12.4	12.4	12.4	12.4	12.3	12.4	12.3
6	0	-4.0	0	+10.1	12.2	12.2	12.2	12.3	12.2	12.2	12.2	12.2
7	+9.9	-5.9	+10.1	0	12.2	12.2	12.3	12.2	12.3	12.2	12.2	12.1

Scenario:

Scenario 1: @ CTA connection #1 and #2 closed, @ ComEd circuit #1 and #2 closed. This represents the normal condition.

Scenario 2: @ CTA connection #1 open and #2 closed, @ ComEd circuit #1 open and #2 closed. This represents an outage of ComEd circuit #1.

Scenario 3: @ CTA connection #1 and bus tie open and #2 closed, @ ComEd circuit #1 and #2 closed. This represents an outage of CTA Bus #1.

Scenario 4: @ CTA connection #1 closed and #2 open, @ ComEd circuit #1 closed and #2 open. This represents an outage of ComEd circuit #2.

Scenario 5: @ CTA connection #1 closed and #2 and bus tie open, @ ComEd circuit #1 and #2 closed. This represents an outage of CTA Bus #2.

Scenario 6: @ CTA connection #1 and #2 closed, @ ComEd circuit #1 open and #2 closed. This represents loss of source for ComEd circuit #1.

Scenario 7: @ CTA connection #1 and #2 closed, @ ComEd circuit #1 closed and #2 open. This represents loss of source for ComEd circuit #2.

CONFIDENTIAL AND PROPRIETARY - CEII

Z SUBSTATION

ZZ CYME Study Results

Scenario	@ CTA / Metra -Connection #1 (MVA)	@ CTA / Metra - Connection #2 (MVA)	@ ComEd - Circuit #1 (MVA)	@ ComEd - Circuit #2 (MVA)	@ CTA / Metra - Connection #1 (kV)	@ CTA / Metra - Connection #2 (kV)	@ ComEd - Circuit #1 (kV)	@ ComEd - Circuit #2 (kV)
1	-1.1	-1.1	1.4	1.5	13.0	13.0	13.0	13.0
2	0.0	-2.2	0.0	2.6	0.0	13.0	0.0	13.0
3	0.0	-2.2	0.3	2.6	13.0	13.0	13.0	13.0
4	-2.2	0.0	2.5	0.0	13.0	0.0	13.0	0.0
5	-2.2	0.0	2.5	0.4	13.0	13.0	13.0	13.0
6	0.3	-2.5	0.0	2.9	13.0	13.0	13.0	13.0
7	-2.6	0.4	2.9	0.0	13.0	13.0	13.0	13.0
8								

ZZ Cyme Results Comparison

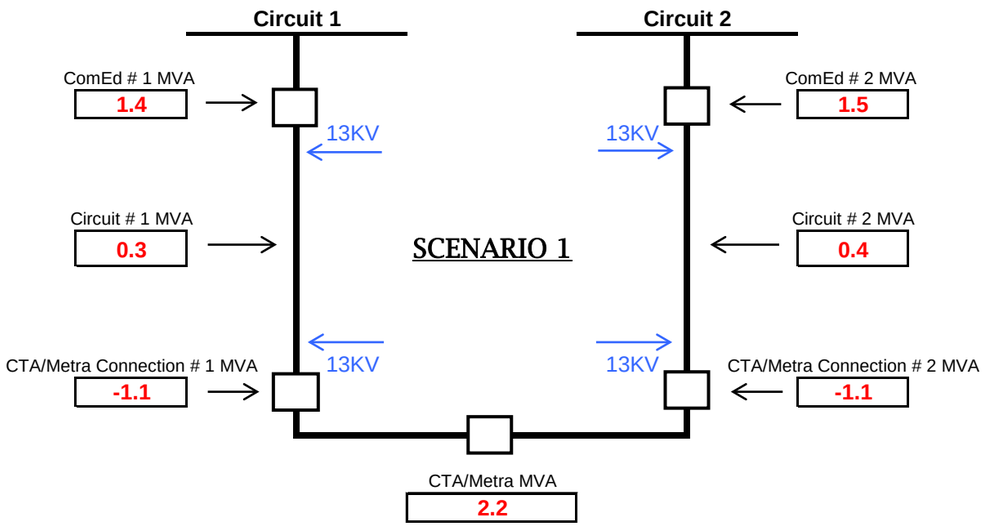

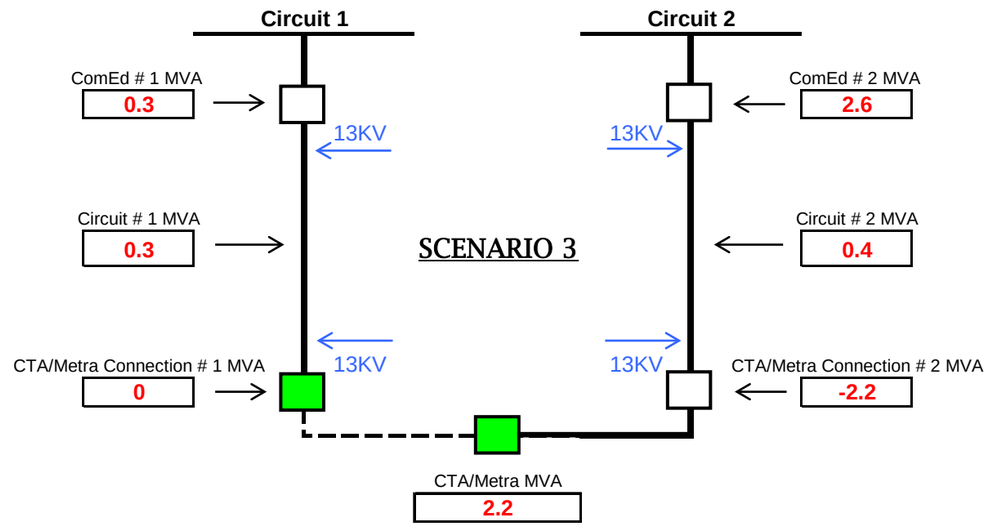

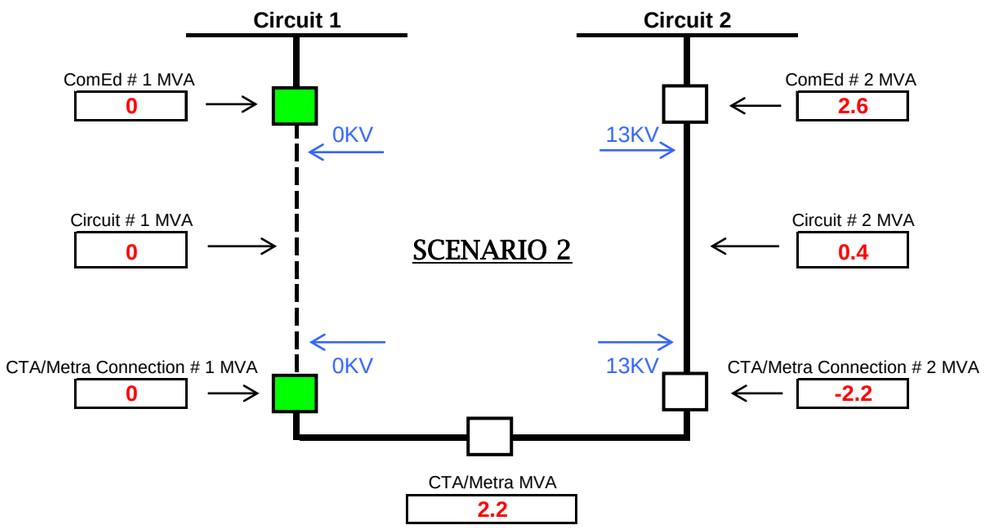

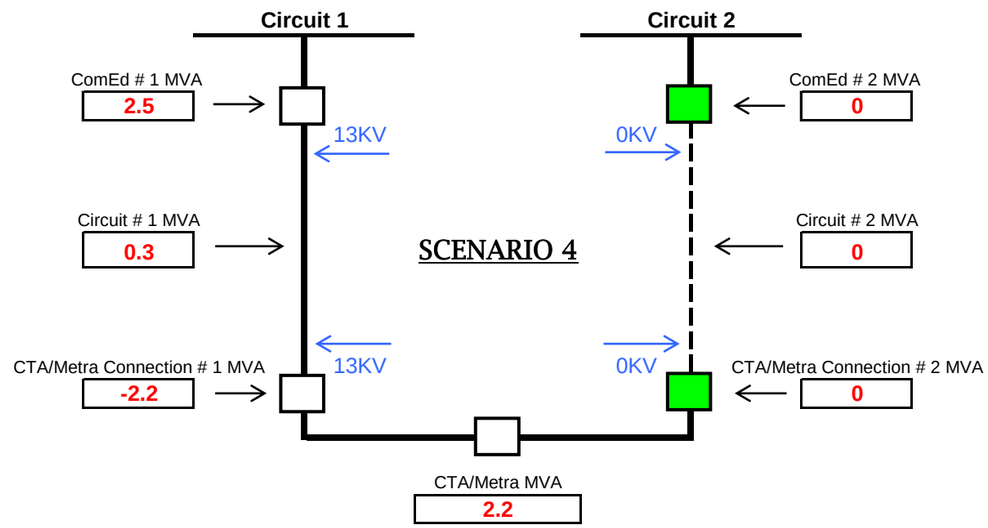

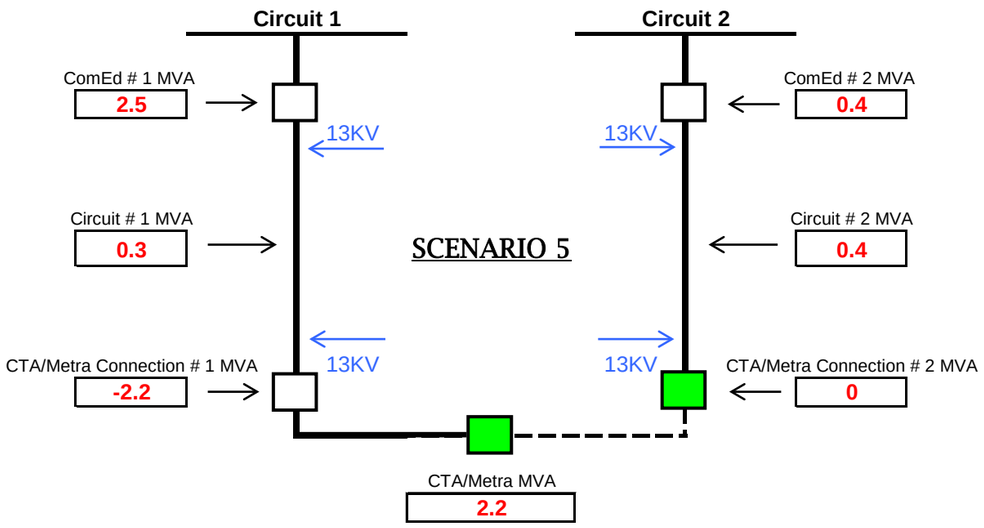
Circuit 1
Circuit 2
ComEd # 1 MVA
2.5
13KV
13KV
ComEd # 2 MVA
0.4
Circuit # 1 MVA
0.3
SCENARIO 5
Circuit # 2 MVA
0.4
CTA/Metra Connection # 1 MVA
-2.2
13KV
13KV
CTA/Metra Connection # 2 MVA
0
CTA/Metra MVA
2.2

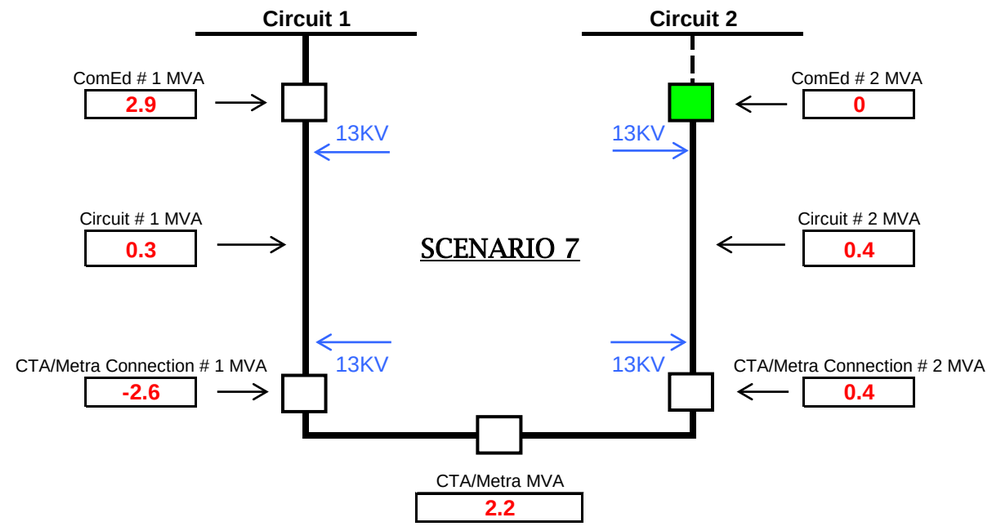
Circuit 1
Circuit 2
ComEd # 1 MVA
2.9
13KV
13KV
ComEd # 2 MVA
0
Circuit # 1 MVA
0.3
SCENARIO 7
Circuit # 2 MVA
0.4
CTA/Metra Connection # 1 MVA
-2.6
13KV
13KV
CTA/Metra Connection # 2 MVA
0.4
CTA/Metra MVA
2.2

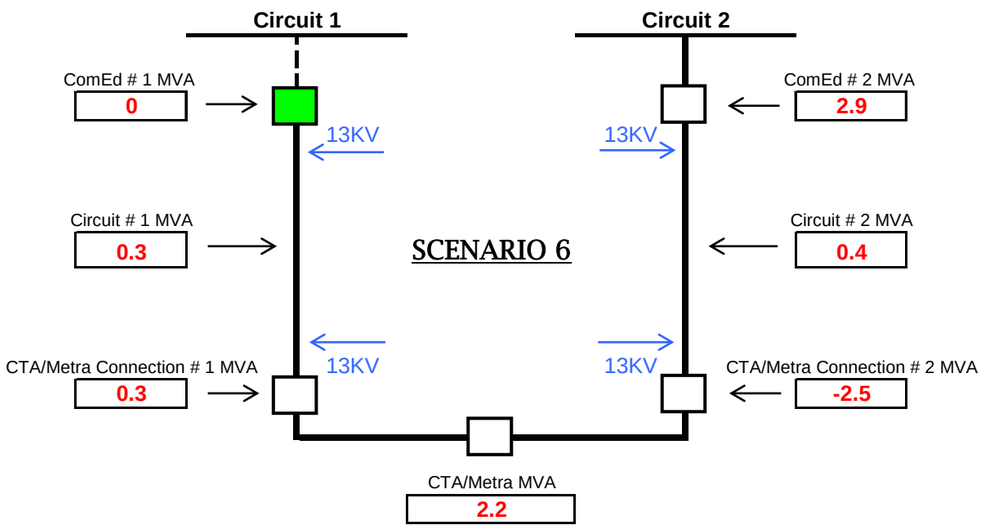
Circuit 1
Circuit 2
ComEd # 1 MVA
0
13KV
13KV
ComEd # 2 MVA
2.9
Circuit # 1 MVA
0.3
SCENARIO 6
Circuit # 2 MVA
0.4
CTA/Metra Connection # 1 MVA
0.3
13KV
13KV
CTA/Metra Connection # 2 MVA
-2.5
CTA/Metra MVA
2.2

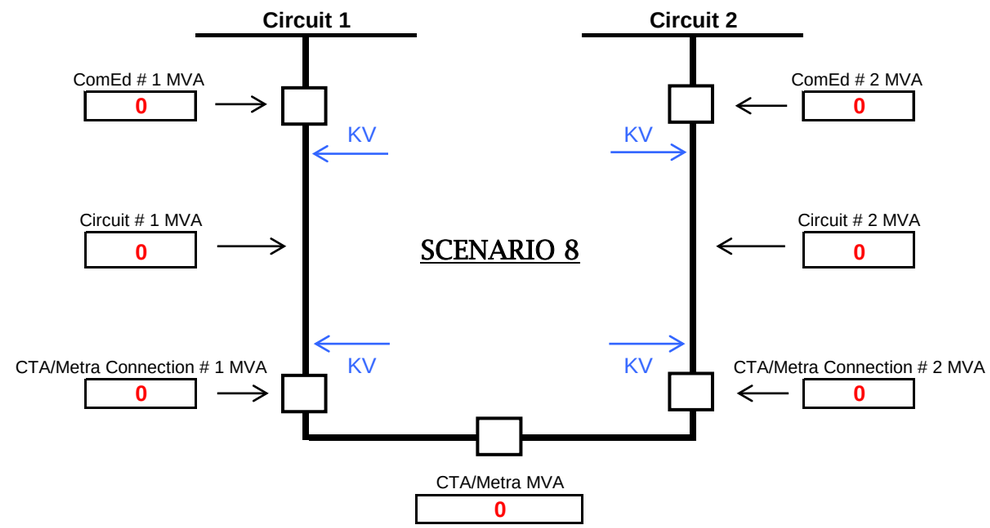
Circuit 1
Circuit 2
ComEd # 1 MVA
0
KV
KV
ComEd # 2 MVA
0
Circuit # 1 MVA
0
SCENARIO 8
Circuit # 2 MVA
0
CTA/Metra Connection # 1 MVA
0
KV
KV
CTA/Metra Connection # 2 MVA
0
CTA/Metra MVA
0

ZZ CYME Study Information

- [redacted] substation load was obtained from Cedar Loads. Peak load for each feeding line is [redacted] with assumed PF=[redacted]

- [redacted] APT load information used.
  - [redacted] APT selected load date: [redacted]
  - [redacted] APT actual load on [redacted]
  - [redacted] APT WA on selected load date: [redacted]
  - [redacted] WA load: [redacted]

- [redacted] APT load information used.
  - [redacted] APT selected load date: [redacted]
  - [redacted] APT actual load on [redacted]
  - [redacted] APT WA on selected load date: [redacted]
  - [redacted] WA load: [redacted]

- [redacted] load allocation method
  - Validate in the CYME model all transformers, ESS loads, including [redacted] for each feeding line at [redacted] per Cedar meter information.
  - Open section 116, this is tie breaker at [redacted] (zero point). This allowed for proper load allocation on the feeders.
  - Power factor of [redacted] for [redacted] and [redacted] for [redacted] were used during allocation so as to obtain an adjusted load PF of [redacted] on all feeders.
  - Close zero-point at [redacted] bus tie and run analysis.

- Physical midpoint on feeder [redacted] is taken at section 1058736046.
- Physical endpoint on feeder [redacted] is taken at section 1058972038.

- Physical midpoint on feeder [redacted] is taken at section 1058445357.
- Physical endpoint on feeder [redacted] is taken at section 1058736223.

ZZ CTA CYME Study Results

Scenario	@ CTA -Connection #1 (MVA)	@ CTA - Connection #2 (MVA)	@ ComEd - Circuit #1 (MVA)	@ ComEd - Circuit #2 (MVA)	@ CTA -Connection #1 (kV)	@ CTA - Connection #2 (kV)	@ ComEd - Circuit #1 (kV)	@ ComEd - Circuit #2 (kV)	@ ComEd - Circuit #1 Midpoint (kV)	@ ComEd - Circuit #2 Midpoint (kV)	@ ComEd - Circuit #1 Endpoint (kV)	@ ComEd - Circuit #2 Endpoint (kV)
1	-1.1	-1.1	1.4	1.5	13.0	13.0	13.0	13.0	13.0	13.0	13.0	13.0
2	0	-2.2	0	2.6	0	13.0	0	13.0	0	13.0	0	13.0
3	0	-2.2	0.3	2.6	13.0	13.0	13.0	13.0	13.0	13.0	13.0	13.0
4	-2.2	0	2.5	0	13.0	0	13.0	0	13.0	0	13.0	0
5	-2.2	0	2.5	0.4	13.0	13.0	13.0	13.0	13.0	13.0	13.0	13.0
6	0.3	-2.5	0	2.9	13.0	13.0	13.0	13.0	13.0	13.0	13.0	13.0
7	-2.6	0.4	2.9	0	13.0	13.0	13.0	13.0	13.0	13.0	13.0	13.0

Scenario:

Scenario 1: @ CTA/Metra connection #1 and #2 closed, @ ComEd circuit #1 and #2 closed. This represents the normal condition.

Scenario 2: @ CTA/Metra connection #1 open and #2 closed, @ ComEd circuit #1 open and #2 closed. This represents an outage of ComEd circuit #1.

Scenario 3: @ CTA/Metra connection #1 and bus tie open and #2 closed, @ ComEd circuit #1 and #2 closed. This represents an outage of CTA/Metra Bus #1.

Scenario 4: @ CTA/Metra connection #1 closed and #2 open, @ ComEd circuit #1 closed and #2 open. This represents an outage of ComEd circuit #2.

Scenario 5: @ CTA/Metra connection #1 closed and #2 and bus tie open, @ ComEd circuit #1 and #2 closed. This represents an outage of CTA/Metra Bus #2.

Scenario 6: @ CTA/Metra connection #1 and #2 closed, @ ComEd circuit #1 open and #2 closed. This represents loss of source for ComEd circuit #1.

Scenario 7: @ CTA/Metra connection #1 and #2 closed, @ ComEd circuit #1 closed and #2 open. This represents loss of source for ComEd circuit #2.

CONFIDENTIAL AND PROPRIETARY - CEII

ZZ SUBSTATION