A CTA CYME Study Results

Scenario	@ CTA / Metra -Connection #1 (MVA)	@ CTA / Metra - Connection #2 (MVA)	@ ComEd - Circuit #1 (MVA)	@ ComEd - Circuit #2 (MVA)	@ CTA / Metra - Connection #1 (kV)	@ CTA / Metra - Connection #2 (kV)	@ ComEd - Circuit #1 (kV)	@ ComEd - Circuit #2 (kV)
1	-3.7	2.3	5.8	6.0	12.3	12.3	12.4	12.4
2	0.0	-1.4	0.0	8.1	0.0	12.1	0.0	12.4
3	0.0	-1.4	2.1	8.1	12.4	12.1	12.5	12.4
4	-1.4	0.0	3.5	0.0	12.4	11.6	12.4	11.5
5	-1.4	0.0	3.5	7.3	12.4	12.2	12.4	12.4
6	2.1	-3.5	0.0	9.3	12.0	12.0	12.0	12.3
7	-6.8	5.4	9.1	0.0	12.2	12.1	12.4	12.0
8	-3.9	2.4	6.0	6.2	12.3	12.3	12.4	12.4

A CTA Cyme Results Comparison

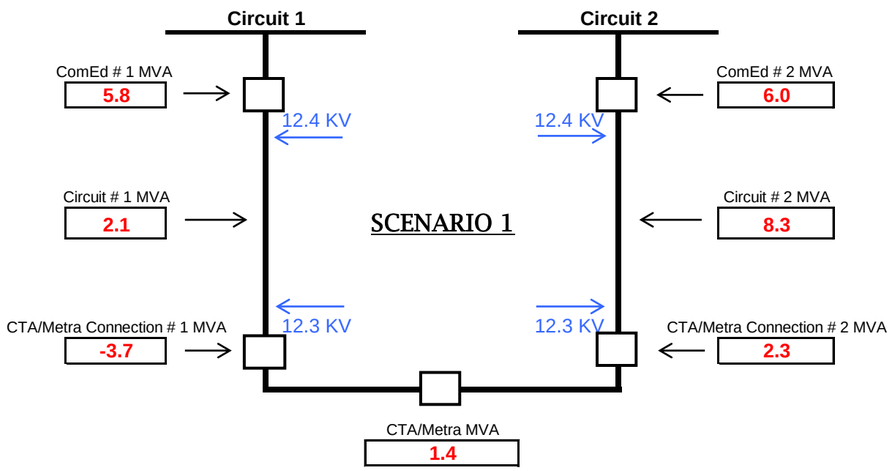

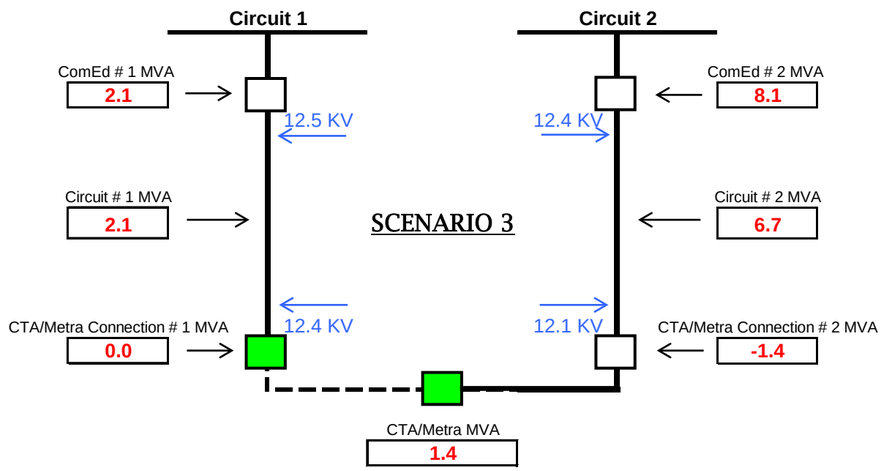

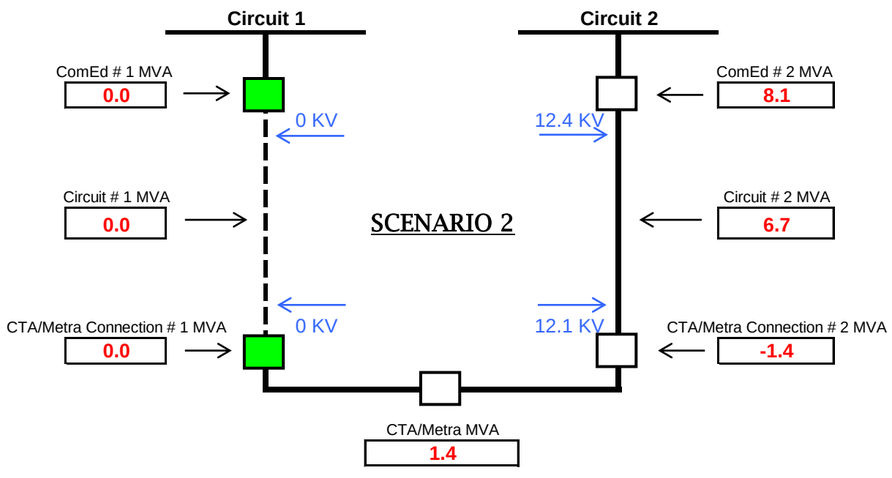

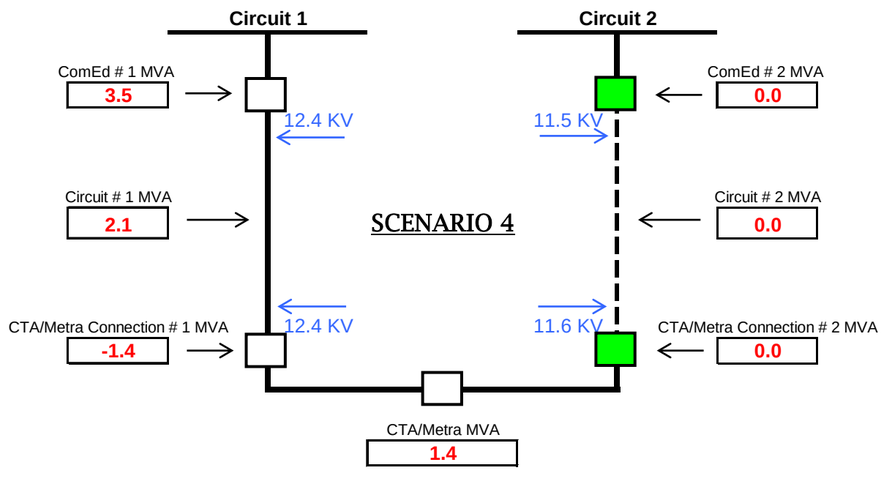

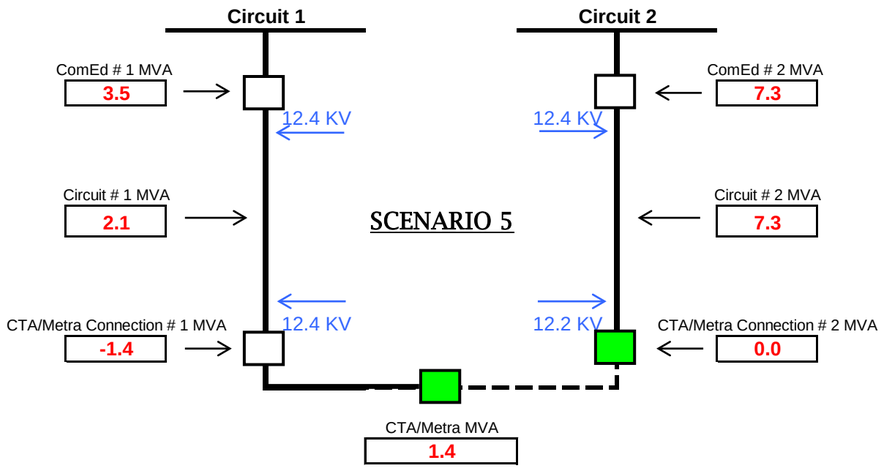
Circuit 1
Circuit 2
ComEd # 1 MVA
3.5
12.4 KV
12.4 KV
ComEd # 2 MVA
7.3
Circuit # 1 MVA
2.1
SCENARIO 5
Circuit # 2 MVA
7.3
CTA/Metra Connection # 1 MVA
-1.4
12.4 KV
12.2 KV
CTA/Metra Connection # 2 MVA
0.0
CTA/Metra MVA
1.4

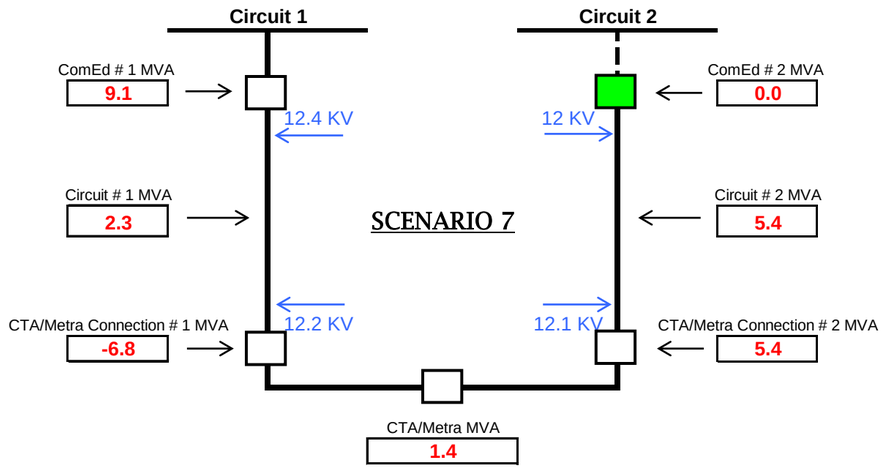
Circuit 1
Circuit 2
ComEd # 1 MVA
9.1
12.4 KV
12 KV
ComEd # 2 MVA
0.0
Circuit # 1 MVA
2.3
SCENARIO 7
Circuit # 2 MVA
5.4
CTA/Metra Connection # 1 MVA
-6.8
12.2 KV
12.1 KV
CTA/Metra Connection # 2 MVA
5.4
CTA/Metra MVA
1.4

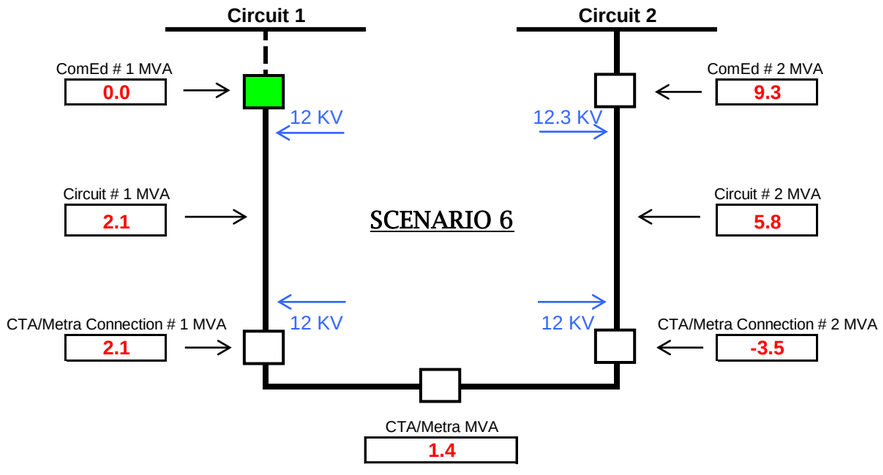
Circuit 1
Circuit 2
ComEd # 1 MVA
0.0
12 KV
12.3 KV
ComEd # 2 MVA
9.3
Circuit # 1 MVA
2.1
SCENARIO 6
Circuit # 2 MVA
5.8
CTA/Metra Connection # 1 MVA
2.1
12 KV
12 KV
CTA/Metra Connection # 2 MVA
-3.5
CTA/Metra MVA
1.4

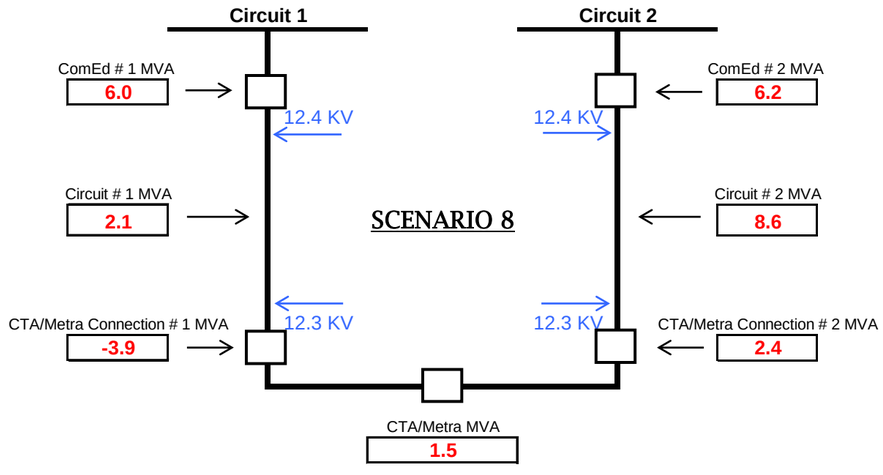
Circuit 1
Circuit 2
ComEd # 1 MVA
6.0
12.4 KV
12.4 KV
ComEd # 2 MVA
6.2
Circuit # 1 MVA
2.1
SCENARIO 8
Circuit # 2 MVA
8.6
CTA/Metra Connection # 1 MVA
-3.9
12.3 KV
12.3 KV
CTA/Metra Connection # 2 MVA
2.4
CTA/Metra MVA
1.5

A CTA CYME Study Information

- Following load demand for [redacted], [redacted], assumed at PF=[redacted] (From load information provided by LCS account manager).
  - [redacted] - [redacted] = [redacted] KW
  - [redacted] - [redacted] / - [redacted] = [redacted] KW / [redacted] KW
  - [redacted] - [redacted] = [redacted] KW
  - [redacted] - [redacted] = [redacted] KW
  - [redacted] - [redacted] = [redacted] KW
- [redacted], [redacted]., assumed load demand [redacted]KW at PF=[redacted] on each of ten spot loads on feeder [redacted]. [redacted] has total of [redacted]MW and six feeders (load information provided by account manager), thus [redacted]KW assumed per feeder.
- [redacted], [redacted], assumed load demand [redacted]KW at PF=[redacted] on each of four spot loads on feeder [redacted]. [redacted] has total of [redacted]KW and three feeders (load information provided by account manager), thus [redacted]KW assumed per feeder.
- [redacted], [redacted], assumed load demand [redacted]KW at PF=[redacted] on each of two spot loads on feeder [redacted]. [redacted]has total of [redacted]KW and two feeders (load information provided by account manager), thus [redacted]KW assumed per feeder.
- A CTA ([redacted]) substation load was obtained from Cedar Loads. Peak load for each feeding line is [redacted] KVA with assumed PF=[redacted].
- [redacted] APT load information used.
  - [redacted] APT selected load date: [redacted]
  - [redacted] APT actual load on [redacted]: [redacted]A/[redacted]A/[redacted]A ➔ [redacted]A
  - [redacted] APT WA on selected load date: [redacted]
  - [redacted] WA load: [redacted]A/[redacted]A/[redacted]A ➔ [redacted]A
- [redacted] APT load information used.
  - [redacted] APT selected load date: [redacted]
  - [redacted] APT actual load on [redacted]: [redacted]A/[redacted]A/[redacted]A ➔ [redacted]A
  - [redacted] APT WA on selected load date: [redacted]
  - [redacted] WA load: [redacted]A/[redacted]A/[redacted]A➔ [redacted]A
- [redacted] APT load information used.
  - [redacted] APT selected load date: [redacted]
  - [redacted] APT actual load on [redacted]: [redacted]A/[redacted]A/[redacted]A ➔ [redacted]A
  - [redacted] APT WA on selected load date: [redacted]
  - [redacted] WA load: [redacted]A/[redacted]A/[redacted]A➔ [redacted]A

- [redacted] APT load information used.
  - [redacted] APT selected load date: [redacted]
  - [redacted] APT actual load on [redacted]: [redacted]A/[redacted]A/[redacted]A ➔ [redacted]A
  - [redacted] APT WA on selected load date: [redacted]
  - [redacted] WA load: [redacted]A/[redacted]A/[redacted]A➔ [redacted]A

- A CTA load allocation method
  - Validate in the CYME model all transformers, ESS loads, including [redacted] KVA for each feeding line at [redacted] per Cedar meter information.
  - Inserted switch at the point where feeder [redacted] and [redacted] are in parallel supporting [redacted] A to loads on the [redacted] feeder network (i.e., assumed zero point of the network). Inserted another switch at the point where power flow from [redacted] and [redacted] converge to support [redacted]. This allowed for proper load allocation on the feeders.
  - Enter feeder loads: [redacted]**A for** [redacted] (Avg WA [redacted]A plus the [redacted]A supported from [redacted]); [redacted]**A for** [redacted] (Avg WA [redacted]A minus the [redacted]A contributed to [redacted]); [redacted]**A for** [redacted] (Avg WA [redacted]A minus the [redacted]A contributed to [redacted]); and [redacted]**A for** [redacted].
  - Power factor of [redacted]% for [redacted], [redacted]% for [redacted], [redacted]% for [redacted] and [redacted]% for [redacted] were used during allocation so as to obtain an adjusted load PF of [redacted] – [redacted]% on all feeders.
  - Ignore motors.
  - Open zero-point switches and allocate the loads.
  - Close zero-point switches and run analysis.

- Physical midpoint on feeder [redacted] is taken at cable at the intersection of [redacted] and [redacted].; and the endpoint is taken at cable outside [redacted] (A CTA).

- Physical midpoint on feeder [redacted] is taken at cable at the intersection of [redacted].; and the endpoint is taken at cable outside [redacted] (A CTA).

A CTA CYME Study Results

Scenario	@ CTA -Connection #1 (MVA)	@ CTA - Connection #2 (MVA)	@ ComEd - Circuit #1 (MVA)	@ ComEd - Circuit #2 (MVA)	@ ComEd - Circuit #3 (MVA)	@ CTA -Connection #1 (kV)	@ CTA - Connection #2 (kV)	@ ComEd - Circuit #1 (kV)	@ ComEd - Circuit #2 (kV)	@ ComEd - Circuit #3 (kV)	@ ComEd - Circuit #1 Midpoint (kV)	@ ComEd - Circuit #2 Midpoint (kV)	@ ComEd - Circuit #1 Endpoint (kV)	@ ComEd - Circuit #2 Endpoint (kV)
1	-3.7	+2.3	+5.8	+6.0	+4.6	12.3	12.3	12.4	12.4	12.5	12.3	12.2	12.3	12.3
2	0.0	-1.4	0.0	+8.1	+6.3	0.0	12.1	0.0	12.4	12.4	0.0	12.2	0.0	12.1
3	0.0	-1.4	+2.1	+8.1	+6.3	12.4	12.1	12.5	12.4	12.4	12.4	12.2	12.4	12.1
4	-1.7	+0.3	+3.8	0.0	+2.1	12.4	12.4	12.4	0.0	12.6	12.4	0.0	12.4	12.4
5	-1.4	0.0	+3.5	+7.3	+5.6	12.4	12.2	12.4	12.4	12.5	12.4	12.2	12.4	12.2
6	+2.1	-3.5	0.0	+9.3	+7.3	12.0	12.0	12.0	12.3	12.4	12.0	12.1	12.0	12.0
7	-6.8	+5.4	+9.1	0.0	+7.5	12.2	12.1	12.4	12.0	12.4	12.2	12.0	12.2	12.1
8	-3.9	+2.4	+6.0	+6.2	+4.7	12.3	12.3	12.4	12.4	12.5	12.3	12.2	12.3	12.3
9	-5.8	+4.3	+8.0	+8.4	0.0	12.2	12.2	12.4	12.4	0.0	12.3	12.1	12.2	12.2
10	-5.8	+4.4	+8.0	+8.4	0.0	12.2	12.2	12.4	12.4	12.2	12.3	12.2	12.2	12.2

Scenario:

Scenario 1: @ CTA/Metra connection #1 and #2 closed, @ ComEd circuit #1, #2 and #3 closed. This represents the normal condition.

Scenario 2: @ CTA/Metra connection #1 open and #2 closed, @ ComEd circuit #1 open; #2 and #3 closed. This represents an outage of ComEd circuit #1.

Scenario 3: @ CTA/Metra connection #1 and bus tie open and #2 closed, @ ComEd circuit #1, #2 and #3 closed. This represents an outage of CTA/Metra Bus #1.

Scenario 4: @ CTA/Metra connection #1 and #2 closed, @ ComEd circuit #1 and #3 closed; #2 open, @ [redacted] [redacted] open, @ [redacted] open. This represents an outage of ComEd circuit #2.

Scenario 5: @ CTA/Metra connection #1 closed and #2 and bus tie open, @ ComEd circuit #1, #2 and #3 closed. This represents an outage of CTA/Metra Bus #2.

Scenario 6: @ CTA/Metra connection #1 and #2 closed, @ ComEd circuit #1 open; #2 and #3 closed. This represents loss of source for ComEd circuit #1.

Scenario 7: @ CTA/Metra connection #1 and #2 closed, @ ComEd circuit #1 and #3 closed; #2 open. This represents loss of source for ComEd circuit #2.

Scenario 8: @ CTA/Metra connection #1 and #2 closed, @ ComEd circuit #1 and #2 closed. Open [redacted] and close [redacted]. This represents outage on [redacted] with [redacted] transferred to [redacted]

Scenario 9: @ CTA/Metra connection #1 and #2 closed, @ ComEd circuit #1 and #2 closed; #3 open, @ [redacted] [redacted] open. This represents an outage of ComEd circuit #3.

Scenario 10: @ CTA/Metra connection #1 and #2 closed, @ ComEd circuit #1 and #2 closed; #3 open. This represents loss of source for ComEd circuit #3.

CONFIDENTIAL AND PROPRIETARY - CEII

A SUBSTATION

AA CYME Study Results

Scenario	@ CTA / Metra -Connection #1 (MVA)	@ CTA / Metra - Connection #2 (MVA)	@ ComEd - Circuit #1 (MVA)	@ ComEd - Circuit #2 (MVA)	@ CTA / Metra - Connection #1 (kV)	@ CTA / Metra - Connection #2 (kV)	@ ComEd - Circuit #1 (kV)	@ ComEd - Circuit #2 (kV)
1	-3.5	-0.9	6.6	6.7	12.8	12.8	13.0	13.0
2	0.0	-4.1	0.0	10.0	0.0	12.6	0.0	13.0
3	0.0	-4.1	3.7	10.0	12.9	12.6	13.0	13.0
4	-4.2	0.0	7.4	0.0	12.8	0.0	13.0	0.0
5	-4.2	0.0	7.4	5.9	12.8	13.0	13.0	13.0
6	3.5	-7.1	0.0	13.1	12.5	12.6	13.0	12.9
7	-9.6	5.6	13.1	0.0	12.5	12.5	12.9	13.0
8								

KV

AA Cyme Results Comparison

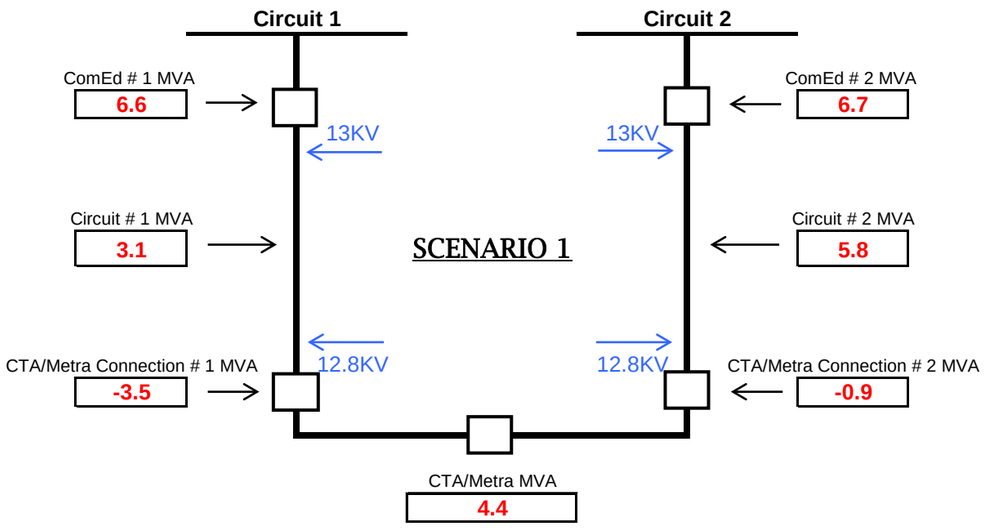

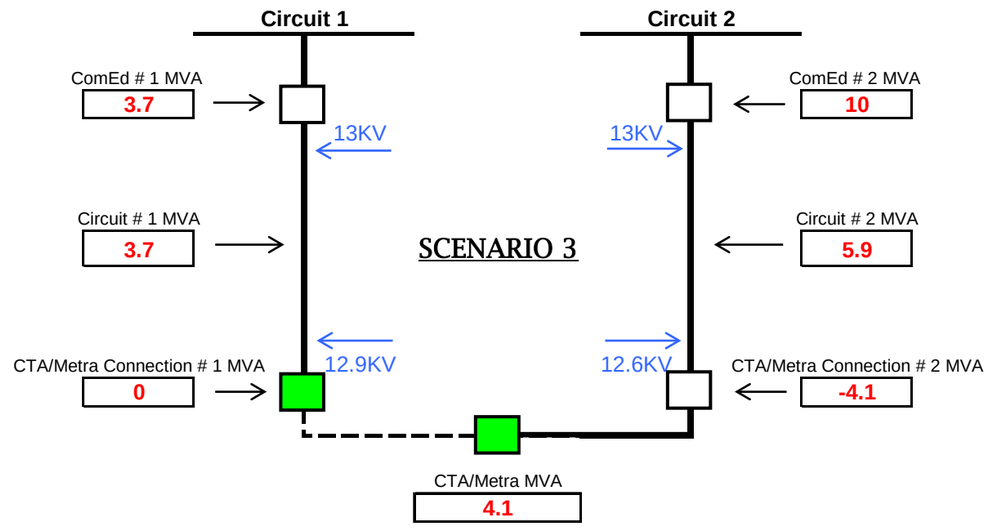

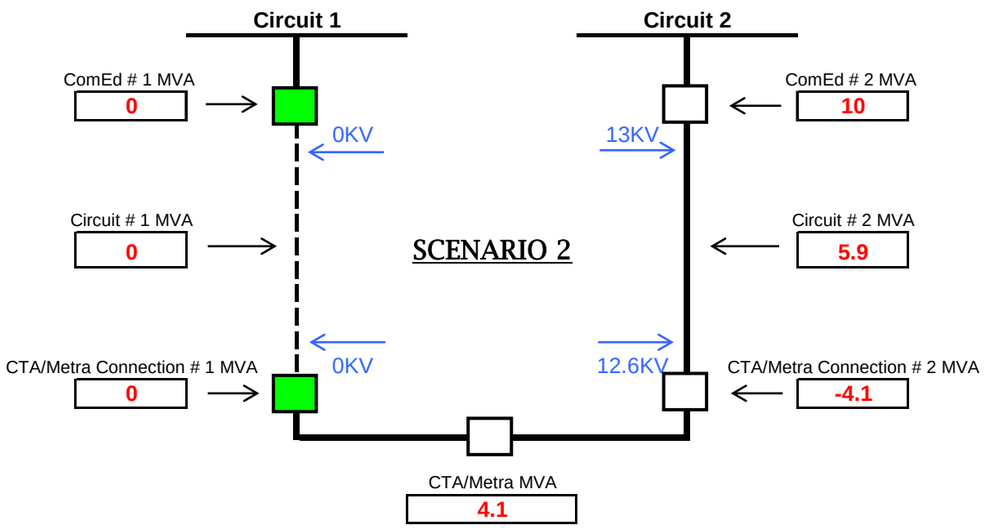

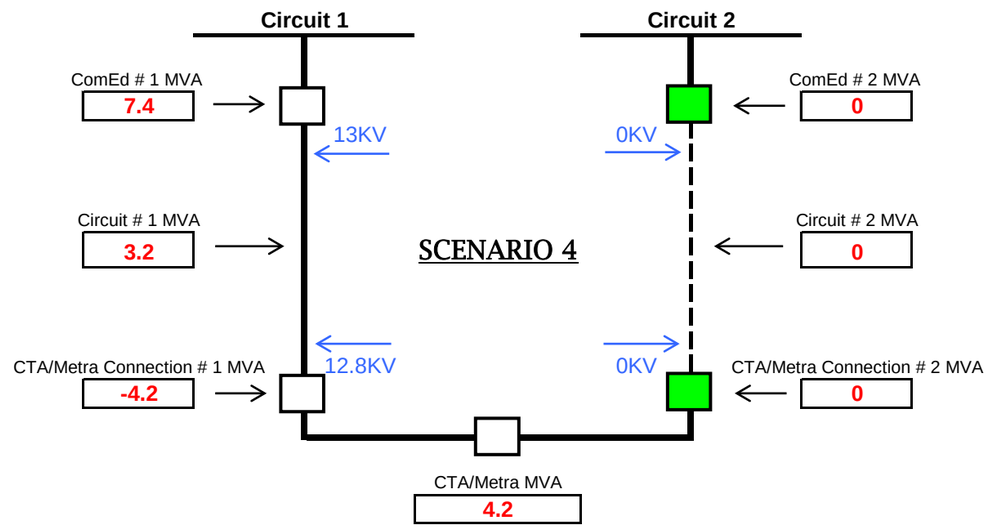

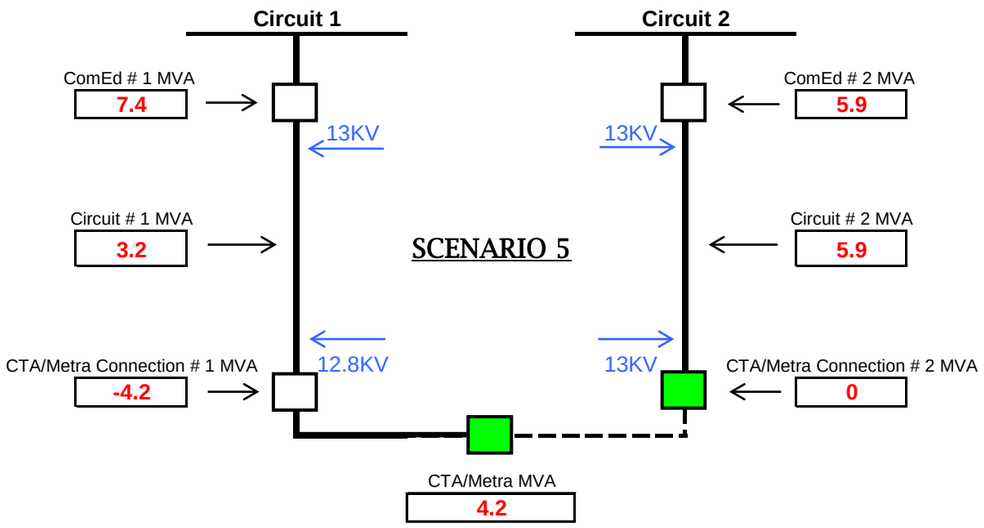
Circuit 1
Circuit 2
ComEd # 1 MVA
7.4
13KV
13KV
ComEd # 2 MVA
5.9
Circuit # 1 MVA
3.2
SCENARIO 5
Circuit # 2 MVA
5.9
12.8KV
13KV
CTA/Metra Connection # 1 MVA
-4.2
CTA/Metra Connection # 2 MVA
0
CTA/Metra MVA
4.2

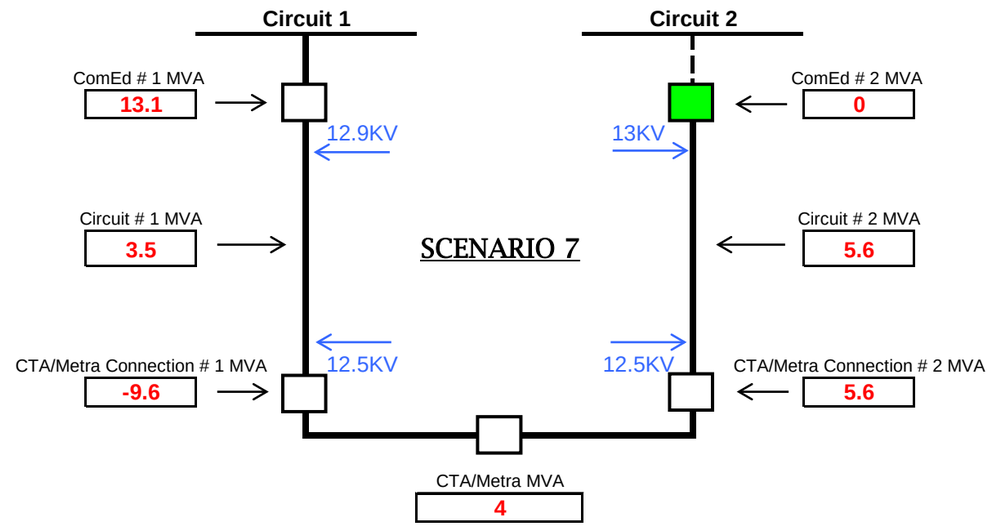
Circuit 1
Circuit 2
ComEd # 1 MVA
13.1
12.9KV
13KV
ComEd # 2 MVA
0
Circuit # 1 MVA
3.5
SCENARIO 7
Circuit # 2 MVA
5.6
12.5KV
12.5KV
CTA/Metra Connection # 1 MVA
-9.6
CTA/Metra Connection # 2 MVA
5.6
CTA/Metra MVA
4

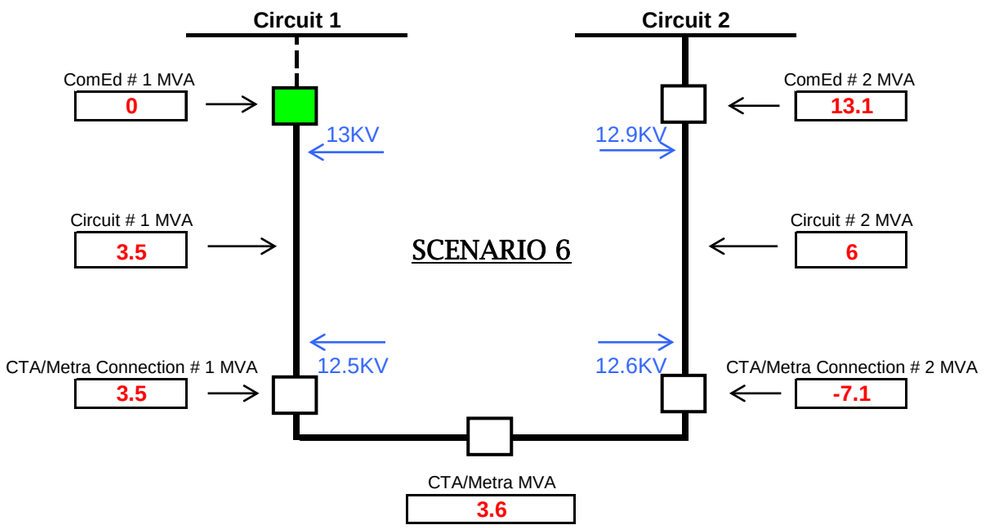
Circuit 1
Circuit 2
ComEd # 1 MVA
0
13KV
12.9KV
ComEd # 2 MVA
13.1
Circuit # 1 MVA
3.5
SCENARIO 6
Circuit # 2 MVA
6
12.5KV
12.6KV
CTA/Metra Connection # 1 MVA
3.5
CTA/Metra Connection # 2 MVA
-7.1
CTA/Metra MVA
3.6

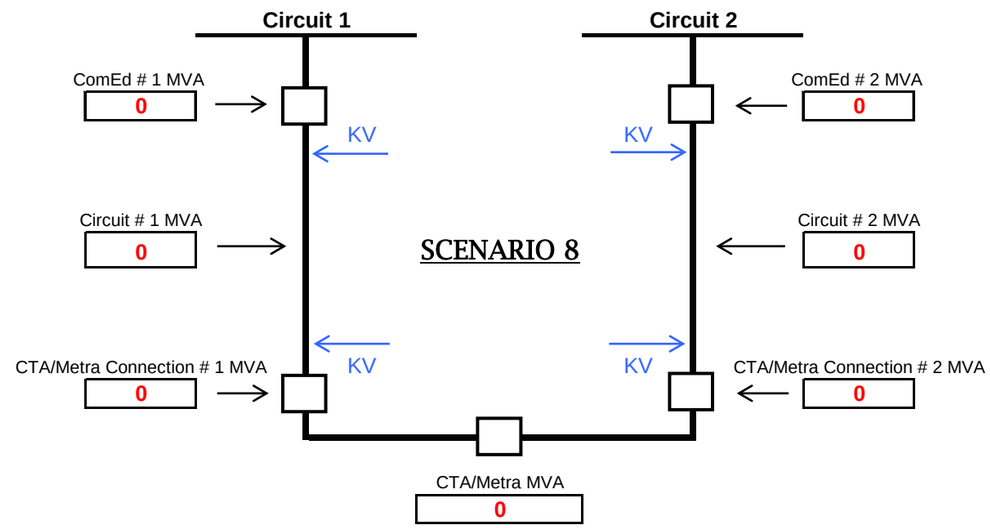
Circuit 1
Circuit 2
ComEd # 1 MVA
0
KV
KV
ComEd # 2 MVA
0
Circuit # 1 MVA
0
SCENARIO 8
Circuit # 2 MVA
0
KV
KV
CTA/Metra Connection # 1 MVA
0
CTA/Metra Connection # 2 MVA
0
CTA/Metra MVA
0

AA CYME Study Information

- [redacted], substation load was obtained from Cedar Loads. Peak load for each feeding line is [redacted], with assumed PF=-[redacted].

- [redacted] APT load information used.
  - [redacted] APT selected load date: [redacted]
  - [redacted] APT actual load on [redacted]
  - [redacted] APT WA on selected load date: [redacted]
  - [redacted] WA load: [redacted]

- [redacted] APT load information used.
  - [redacted] APT selected load date: [redacted]
  - [redacted] APT actual load on [redacted]
  - [redacted] APT WA on selected load date: [redacted]
  - [redacted] WA load: [redacted]
- [redacted] load allocation method
  - Validate in the CYME model all transformers, ESS loads, including [redacted] for each feeding line at [redacted] per Cedar meter information.
  - Open section 1030299141, (i.e., assumed zero point of the network). This allowed for proper load allocation on the feeders.
  - Due to [redacted] being the zero-point, for allocation purposes the load at [redacted] was split between [redacted] on [redacted] and [redacted] on [redacted] during the allocation process.
  - Power factor of [redacted] for [redacted] and [redacted] for [redacted] was used during allocation so as to obtain an adjusted load PF of [redacted] on all feeders.
  - Ignore motors.
  - Open zero-point and allocate the loads.
  - Close zero-point and run analysis.
  - The loads at [redacted] were reset to [redacted] on each feeding line for the actual study.

- Physical midpoint kV on feeder [redacted] is taken at section 389410523 and the endpoint kV is taken at section 1076881805.

- Physical midpoint kV on feeder [redacted] is taken at section 389413725 and the endpoint kV is taken at section 389258438.

AA CYME Study Results

Scenario	@ Metra -Connection #1 (MVA)	@ Metra - Connection #2 (MVA)	@ ComEd - Circuit #1 (MVA)	@ ComEd - Circuit #2 (MVA)	@ Metra -Connection #1 (kV)	@ Metra - Connection #2 (kV)	@ ComEd - Circuit #1 (kV)	@ ComEd - Circuit #2 (kV)	@ ComEd - Circuit #1 Midpoint (kV)	@ ComEd - Circuit #2 Midpoint (kV)	@ ComEd - Circuit #1 Endpoint (kV)	@ ComEd - Circuit #2 Endpoint (kV)
1	-3.5	-0.9	6.6	6.7	12.8	12.8	13	13	12.8	12.8	12.2	12.7
2	0	-4.1	0	10	0	12.6	0	13	0	12.6	0	12.6
3	0	-4.1	3.7	10	12.9	12.6	13	13	12.9	12.6	12.3	12.6
4	-4.2	0	7.4	0	12.8	0	13	0	12.8	0	12.2	0
5	-4.2	0	7.4	5.9	12.8	13	13	13	12.8	12.8	12.2	12.8
6	3.5	-7.1	0	13.1	12.5	12.6	13	12.9	12.5	12.6	11.9	12.5
7	-9.6	5.6	13.1	0	12.5	12.5	12.9	13	12.6	12.5	12.0	12.5

Scenario:

Scenario 1: @ CTA connection #1 and #2 closed, @ ComEd circuit #1 and #2 closed. This represents the normal condition.

Scenario 2: @ CTA connection #1 open and #2 closed, @ ComEd circuit #1 open and #2 closed. This represents an outage of ComEd circuit #1.

Scenario 3: @ CTA connection #1 and bus tie open and #2 closed, @ ComEd circuit #1 and #2 closed. This represents an outage of CTA Bus #1.

Scenario 4: @ CTA connection #1 closed and #2 open, @ ComEd circuit #1 closed and #2 open. This represents an outage of ComEd circuit #2.

Scenario 5: @ CTA connection #1 closed and #2 and bus tie open, @ ComEd circuit #1 and #2 closed. This represents an outage of CTA Bus #2.

Scenario 6: @ CTA connection #1 and #2 closed, @ ComEd circuit #1 open and #2 closed. This represents loss of source for ComEd circuit #1.

Scenario 7: @ CTA connection #1 and #2 closed, @ ComEd circuit #1 closed and #2 open. This represents loss of source for ComEd circuit #2.

CONFIDENTIAL AND PROPRIETARY - CEII

AA SUBSTATION

B CTA CYME Study Results

Scenario	@ CTA / Metra -Connection #1 (MVA)	@ CTA / Metra - Connection #2 (MVA)	@ ComEd - Circuit #1 (MVA)	@ ComEd - Circuit #2 (MVA)	@ CTA / Metra - Connection #1 (kV)	@ CTA / Metra - Connection #2 (kV)	@ ComEd - Circuit #1 (kV)	@ ComEd - Circuit #2 (kV)
1	-2.4	1.0	2.5	3.5	13.0	13.0	13.0	13.0
2	0.0	-1.5	0.0	5.9	0.0	13.0	0.0	13.0
3	0.0	-1.5	0.0	5.9	13.0	12.9	13.0	13.0
4	-1.5	0.0	1.6	0.0	13.0	0.0	13.0	0.0
5	-1.5	0.0	1.6	4.4	13.0	13.0	13.0	13.0
6	0.0	-1.5	0.0	6.0	12.9	12.9	12.9	13.0
7	-5.9	4.4	6.0	0.0	12.9	12.9	13.0	12.9
8	-5.9	4.4	6.0	0.0	12.9	12.9	13.0	13.0

B CTA Cyme Results Comparison

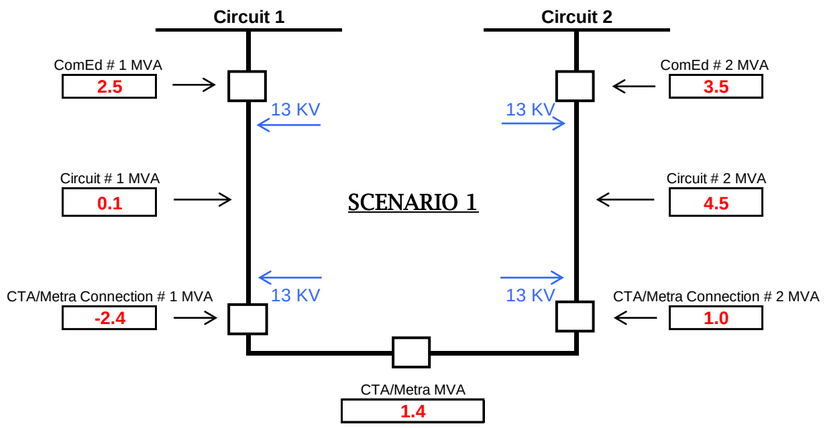

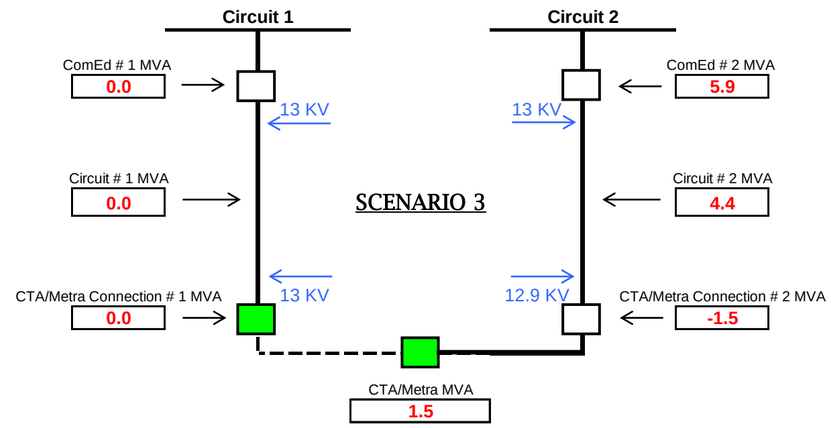

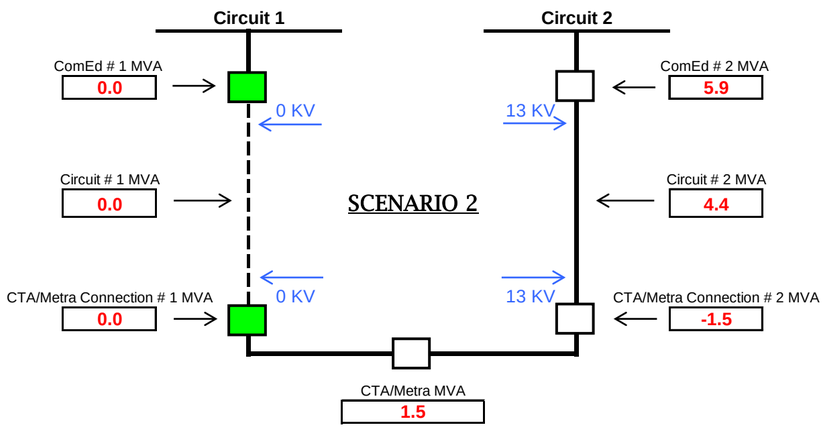

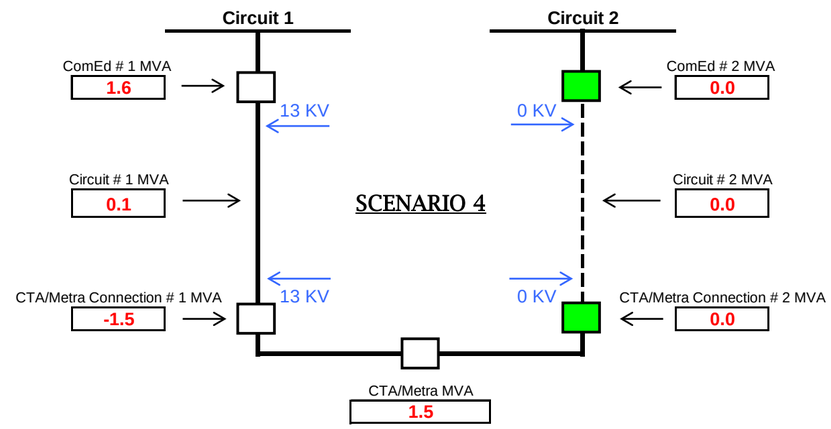

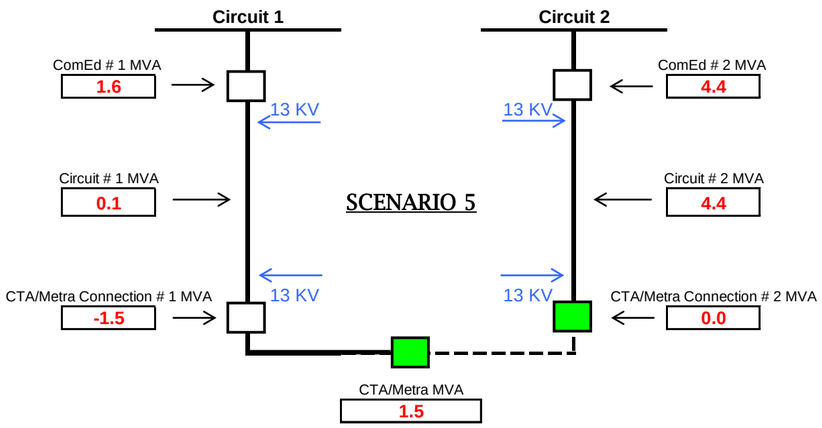
Circuit 1
Circuit 2
ComEd # 1 MVA
1.6
ComEd # 2 MVA
4.4
13 KV
13 KV
Circuit # 1 MVA
0.1
SCENARIO 5
Circuit # 2 MVA
4.4
13 KV
13 KV
CTA/Metra Connection # 1 MVA
-1.5
CTA/Metra Connection # 2 MVA
0.0
CTA/Metra MVA
1.5

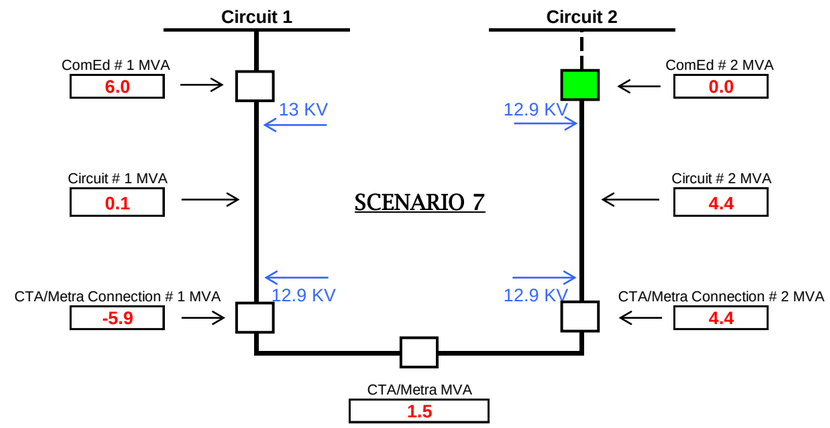
Circuit 1
Circuit 2
ComEd # 1 MVA
6.0
ComEd # 2 MVA
0.0
13 KV
12.9 KV
Circuit # 1 MVA
0.1
SCENARIO 7
Circuit # 2 MVA
4.4
12.9 KV
12.9 KV
CTA/Metra Connection # 1 MVA
-5.9
CTA/Metra Connection # 2 MVA
4.4
CTA/Metra MVA
1.5

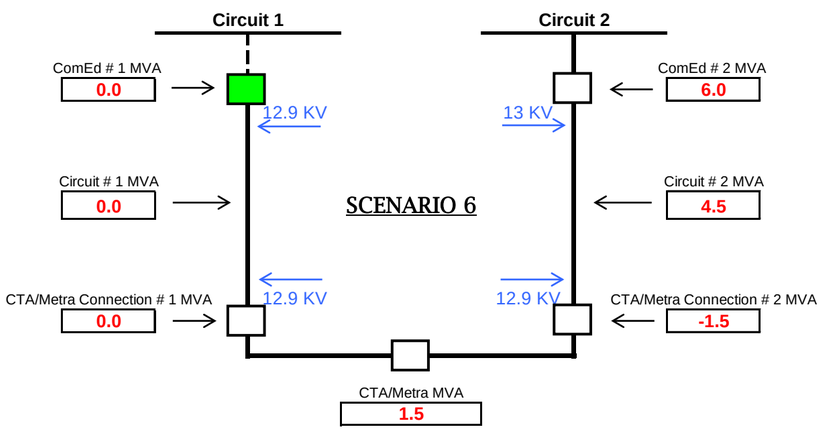
Circuit 1
Circuit 2
ComEd # 1 MVA
0.0
ComEd # 2 MVA
6.0
12.9 KV
13 KV
Circuit # 1 MVA
0.0
SCENARIO 6
Circuit # 2 MVA
4.5
12.9 KV
12.9 KV
CTA/Metra Connection # 1 MVA
0.0
CTA/Metra Connection # 2 MVA
-1.5
CTA/Metra MVA
1.5

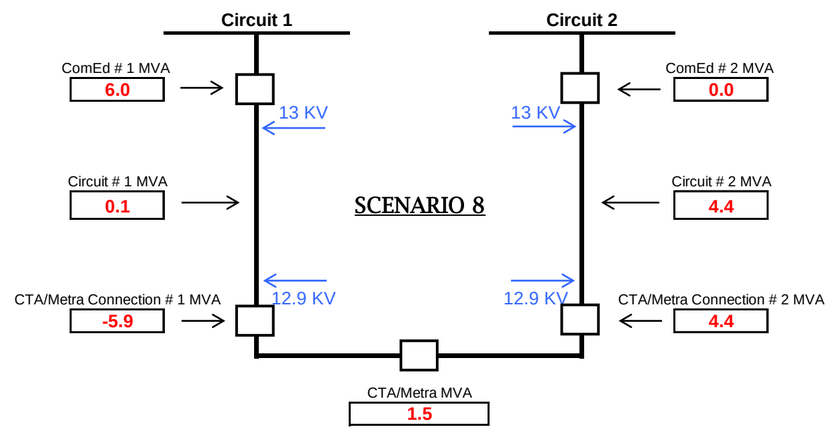
Circuit 1
Circuit 2
ComEd # 1 MVA
6.0
ComEd # 2 MVA
0.0
13 KV
13 KV
Circuit # 1 MVA
0.1
SCENARIO 8
Circuit # 2 MVA
4.4
12.9 KV
12.9 KV
CTA/Metra Connection # 1 MVA
-5.9
CTA/Metra Connection # 2 MVA
4.4
CTA/Metra MVA
1.5

B CTA CYME Study Information

- [redacted], [redacted], [redacted], assumed load demand [redacted] KW, PF=[redacted] (based on billing information, summer peak load was around [redacted] KW). LFM record indicated [redacted] KVA demand for a total connected [redacted] KVA TR. Analysis of the billing record suggests that [redacted] KVA is a result of a double count during the period when the reading was taken.

- B CTA ([redacted]) substation load was obtained from Cedar Loads. Peak load for each feeding line is [redacted] KVA with assumed PF=[redacted].

- [redacted] APT load information used.
  - [redacted] APT selected load date: [redacted]
  - [redacted] APT actual load on [redacted]: [redacted]A/[redacted]A/[redacted]A ➔ [redacted]A
  - [redacted] APT WA on selected load date: [redacted]
  - [redacted] WA load: [redacted]A/[redacted]A/[redacted]A ➔ [redacted]A

- [redacted] APT load information used.
  - [redacted] APT selected load date: [redacted]
  - [redacted] APT actual load on [redacted]: [redacted]A/[redacted]A/[redacted]A ➔ [redacted]A
  - [redacted] APT WA on selected load date: [redacted]
  - [redacted] WA load: [redacted]A/[redacted]A/[redacted]A➔ [redacted]A

- B CTA load allocation method
  - Validate in the CYME model all transformers, ESS loads, including [redacted] KVA for each feeding line at [redacted] per Cedar meter information.
  - Inserted switch at the point where feeder [redacted] is supporting [redacted]A to loads on the [redacted] feeder network (i.e., assumed zero point of the network). This allowed for proper load allocation on the two feeders.
  - Enter feeder loads: [redacted]**A for** [redacted] (Avg WA [redacted]A minus the [redacted]A contributed to [redacted]) and [redacted]**A for** [redacted] (Avg WA [redacted]A plus the [redacted]A supported from [redacted]).
  - Power factor of [redacted]% for [redacted] and [redacted]% for [redacted] were used during allocation so as to obtain an adjusted load PF of [redacted] – [redacted] % on both feeders.
  - Ignore motors.
  - Open zero-point switch and allocate the loads.
  - Close zero-point switch and run analysis.

- Physical midpoint on feeder [redacted] is taken at [redacted]; and the endpoint is taken at cable after [redacted]
- Since feeder [redacted] is an express feeder and only has one spot load, the midpoint is taken at the center of the cable at the intersection of [redacted]. and [redacted]., and the endpoint is taken at cable after [redacted]

B CTA CYME Study Results

Scenario	@ CTA -Connection #1 (MVA)	@ CTA - Connection #2 (MVA)	@ ComEd - Circuit #1 (MVA)	@ ComEd - Circuit #2 (MVA)	@ CTA -Connection #1 (kV)	@ CTA - Connection #2 (kV)	@ ComEd - Circuit #1 (kV)	@ ComEd - Circuit #2 (kV)	@ ComEd - Circuit #1 Midpoint (kV)	@ ComEd - Circuit #2 Midpoint (kV)	@ ComEd - Circuit #1 Endpoint (kV)	@ ComEd - Circuit #2 Endpoint (kV)
1	-2.4	+1.0	+2.5	+3.5	13.0	13.0	13.0	13.0	13.0	13.0	13.0	12.9
2	0	-1.5	0	+5.9	0	13.0	0	13.0	0	12.9	0	12.9
3	0	-1.5	+0.0	+5.9	13.0	12.9	13.0	13.0	13.0	12.9	13.0	12.9
4	-1.5	0	+1.6	0	13.0	0	13.0	0	13.0	0	13.0	0
5	-1.5	0	+1.6	+4.4	13.0	13.0	13.0	13.0	13.0	13.0	13.0	12.9
6	+0.0	-1.5	0	+6.0	12.9	12.9	12.9	13.0	12.9	12.9	12.9	12.9
7	-5.9	+4.4	+6.0	0	12.9	12.9	13.0	12.9	13.0	12.9	13.0	12.9
8	-5.9	+4.4	+6.0	0	12.9	12.9	13.0	13.0	13.0	12.9	13.0	12.9

Scenario:

Scenario 1: @ CTA/Metra connection #1 and #2 closed, @ ComEd circuit #1 and #2 closed. This represents the normal condition.

Scenario 2: @ CTA/Metra connection #1 open and #2 closed, @ ComEd circuit #1 open and #2 closed. This represents an outage of ComEd circuit #1.

Scenario 3: @ CTA/Metra connection #1 and bus tie open and #2 closed, @ ComEd circuit #1 and #2 closed. This represents an outage of CTA/Metra Bus #1.

Scenario 4: @ CTA/Metra connection #1 closed and #2 open, @ ComEd circuit #1 closed and #2 open. This represents an outage of ComEd circuit #2.

Scenario 5: @ CTA/Metra connection #1 closed and #2 and bus tie open, @ ComEd circuit #1 and #2 closed. This represents an outage of CTA/Metra Bus #2.

Scenario 6: @ CTA/Metra connection #1 and #2 closed, @ ComEd circuit #1 open and #2 closed. This represents loss of source for ComEd circuit #1.

Scenario 7: @ CTA/Metra connection #1 and #2 closed, @ ComEd circuit #1 closed and #2 open. This represents loss of source for ComEd circuit #2.

Scenario 8: @ CTA/Metra connection #1 and #2 closed, @ ComEd circuit #1 and #2 closed. [redacted] open. This is identical to scenario 7 where the source for ComEd circuit #2 is lost.

CONFIDENTIAL AND PROPRIETARY - CEII

B SUBSTATION

BBB CYME Study Results

Scenario	@ CTA Connection #1 (MVA)	@ CTA Connection #2 (MVA)	@SS Connection #1 (MVA)	@SS Connection #2 (MVA)	@SS Connection #3 (MVA)	@ ComEd Circuit #1 (MVA))	@ ComEd Circuit #2 (MVA)	@ ComEd Circuit #3 (MVA)	@ CTA Connection #1 (kV)	@ CTA Connection #2 (kV)	@SS Connection #1 (kV)	@SS Connection #2 (kV)	@SS Connection #3 (kV)	@ ComEd Circuit #1 (kV)	@ ComEd Circuit #2 (kV)	@ ComEd Circuit #3 (kV)
1	-6.7	4.5	0.5	-4.0	-3.0	7.0	4.1	3.8	12.9	12.9	12.9	12.9	12.9	13.0	13.0	13.0
2	0.0	-2.1	7.0	-7.5	-6.1	0.0	7.6	6.9	0.0	12.7	12.8	12.8	12.8	0.0	13.0	13.0
3	0.0	-2.1	7.0	-7.5	-6.1	0.3	7.6	6.9	13.0	12.7	12.8	12.8	12.8	13.0	13.0	13.0
4	-2.2	0.0	0.0	-3.8	-2.8	2.5	3.9	3.6	13.0	0.0	0.0	12.9	12.9	13.0	13.0	13.0
5	-2.2	0.0	4.9	-6.3	-5.1	2.5	6.4	5.9	13.0	12.8	12.8	12.8	12.8	13.0	13.0	13.0
6	-8.5	6.3	-1.4	0.0	-5.2	8.9	0.0	6.1	12.9	12.9	12.8	0.0	12.8	13.0	0.0	13.0
7	-7.1	5.0	0.0	0.0	-6.6	7.5	1.2	7.5	12.9	12.9	0.0	0.0	12.8	13.0	13.0	13.0
8	-7.9	5.8	-0.9	-5.7	0.0	8.3	5.8	0.0	12.9	12.9	12.9	12.9	0.0	13.0	13.0	0.0
9	-7.9	5.8	-0.9	-5.7	0.0	8.3	5.8	0.8	12.9	12.9	12.9	12.9	13.0	13.0	13.0	13.0
10	0.3	-2.4	7.3	-7.6	-6.2	0.0	7.7	7.1	12.7	12.7	12.8	12.8	12.8	0.0	13.0	13.0
11	-8.4	6.3	-1.5	0.1	-5.2	8.8	0.0	6.0	12.9	12.9	12.9	12.9	12.9	13.0	0.0	13.0
12	-8.3	6.1	-1.2	-6.2	0.8	8.6	6.3	0.0	12.9	12.9	12.9	12.9	12.8	13.0	13.0	12.8

BBB Cyme Results Comparison

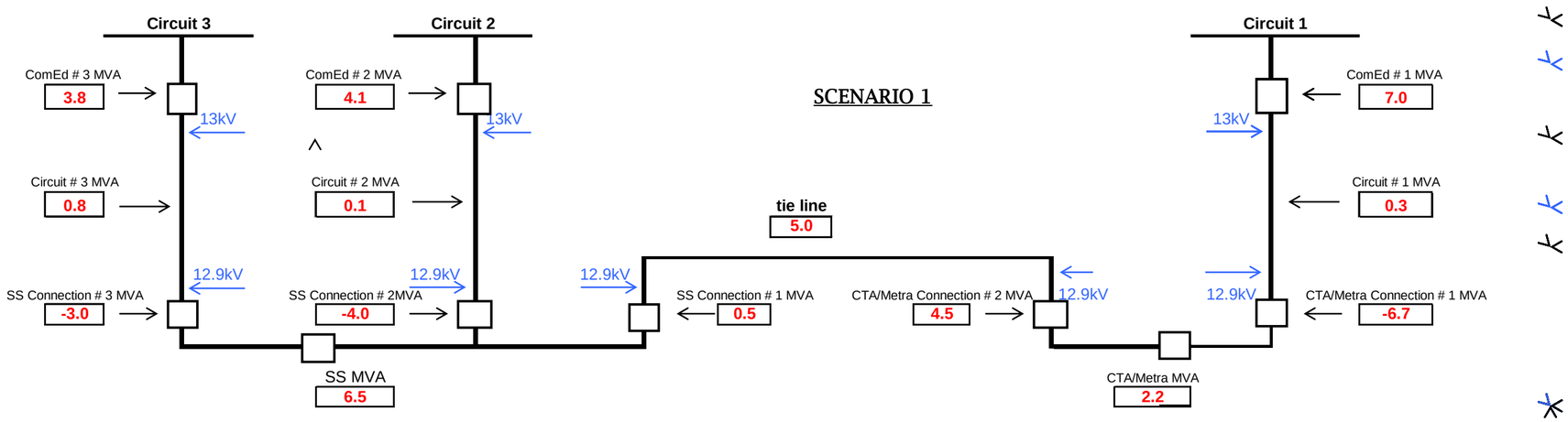

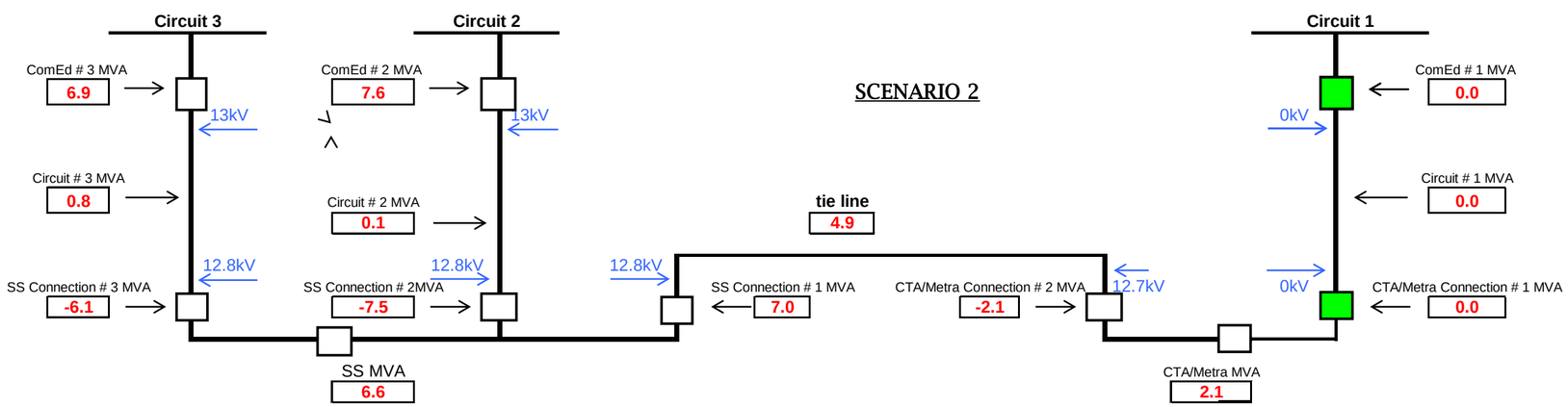

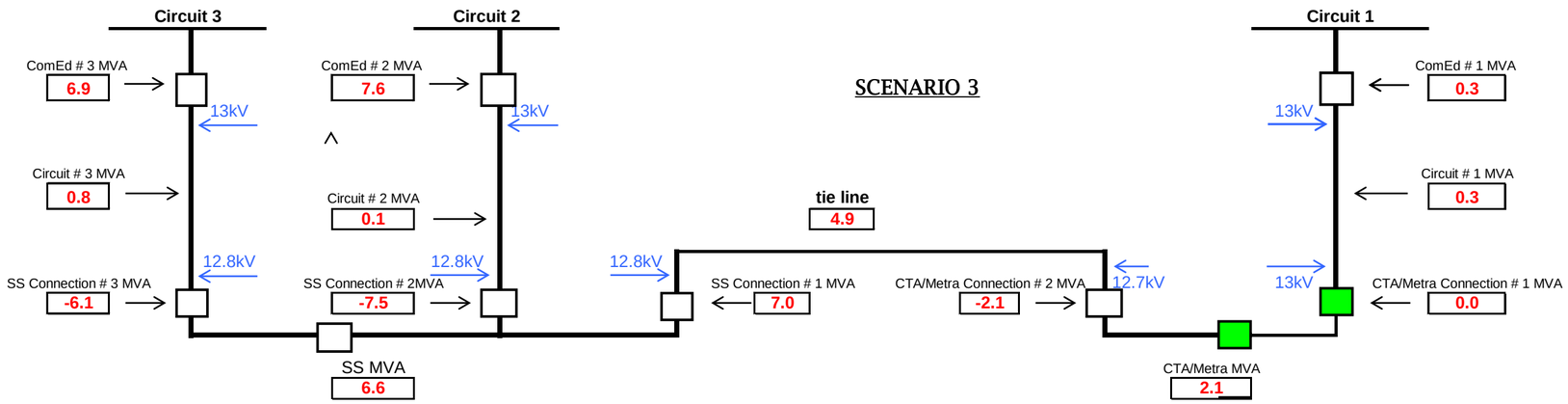
SCENARIO 3
Circuit 3
Circuit 2
Circuit 1
ComEd # 3 MVA
6.9
13kV
ComEd # 2 MVA
7.6
13kV
ComEd # 1 MVA
0.3
13kV
Circuit # 3 MVA
0.8
Circuit # 2 MVA
0.1
Circuit # 1 MVA
0.3
tie line
4.9
12.8kV
12.8kV
12.8kV
12.7kV
13kV
SS Connection # 3 MVA
-6.1
SS Connection # 2MVA
-7.5
SS Connection # 1 MVA
7.0
CTA/Metra Connection # 2 MVA
-2.1
CTA/Metra Connection # 1 MVA
0.0
SS MVA
6.6
CTA/Metra MVA
2.1

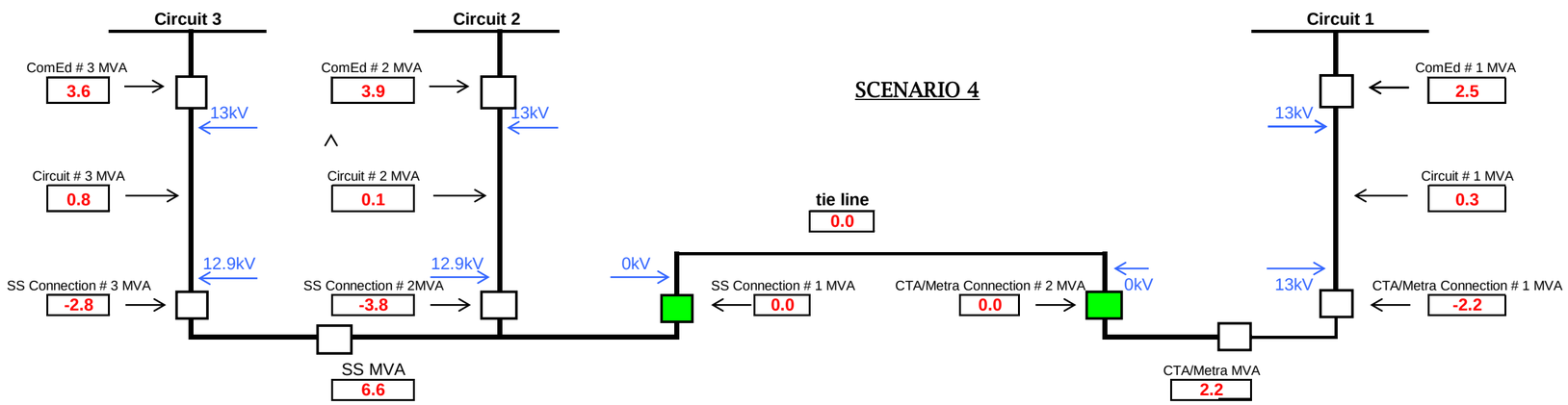
SCENARIO 4
Circuit 3
Circuit 2
Circuit 1
ComEd # 3 MVA
3.6
13kV
ComEd # 2 MVA
3.9
13kV
ComEd # 1 MVA
2.5
13kV
Circuit # 3 MVA
0.8
Circuit # 2 MVA
0.1
Circuit # 1 MVA
0.3
tie line
0.0
12.9kV
12.9kV
0kV
0kV
13kV
SS Connection # 3 MVA
-2.8
SS Connection # 2MVA
-3.8
SS Connection # 1 MVA
0.0
CTA/Metra Connection # 2 MVA
0.0
CTA/Metra Connection # 1 MVA
-2.2
SS MVA
6.6
CTA/Metra MVA
2.2

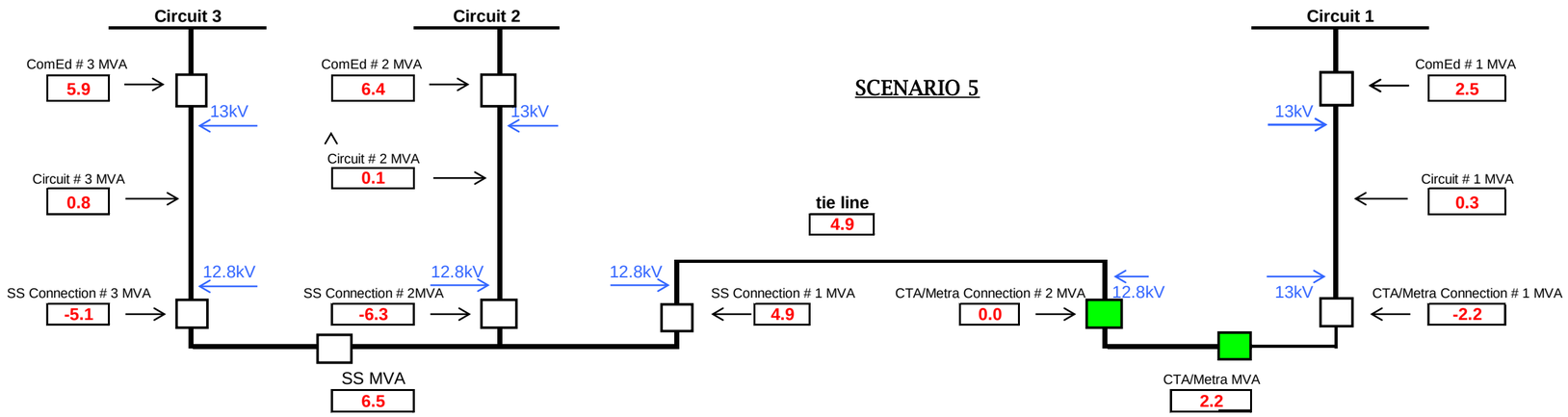
SCENARIO 5
Circuit 3
Circuit 2
Circuit 1
ComEd # 3 MVA
5.9
13kV
Circuit # 3 MVA
0.8
SS Connection # 3 MVA
-5.1
12.8kV
ComEd # 2 MVA
6.4
13kV
Circuit # 2 MVA
0.1
SS Connection # 2MVA
-6.3
12.8kV
SS MVA
6.5
tie line
4.9
12.8kV
SS Connection # 1 MVA
4.9
CTA/Metra Connection # 2 MVA
0.0
12.8kV
CTA/Metra MVA
2.2
ComEd # 1 MVA
2.5
13kV
Circuit # 1 MVA
0.3
13kV
CTA/Metra Connection # 1 MVA
-2.2

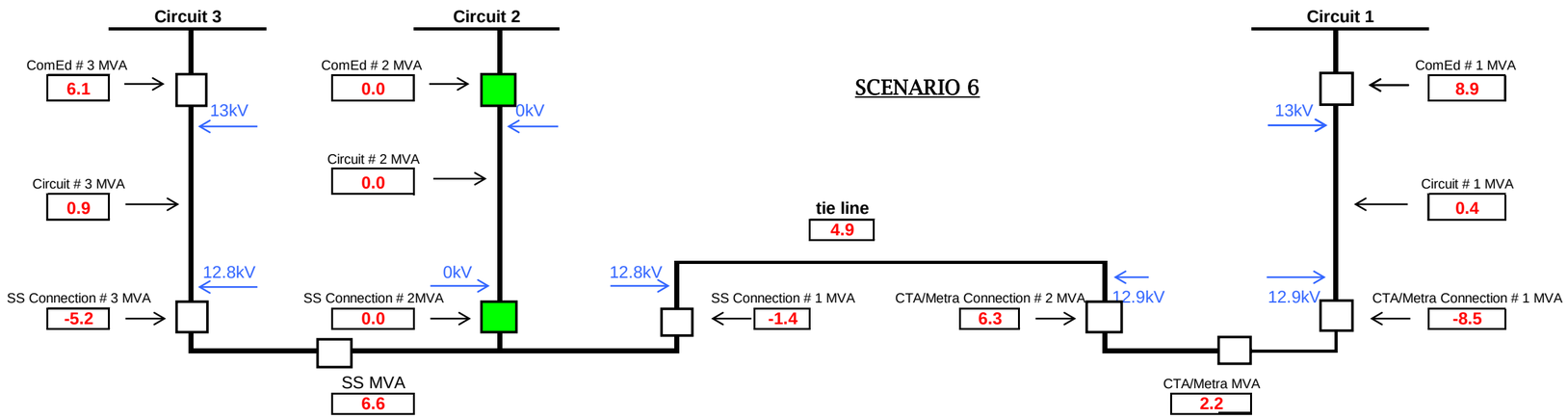
SCENARIO 6
Circuit 3
Circuit 2
Circuit 1
ComEd # 3 MVA
6.1
13kV
Circuit # 3 MVA
0.9
SS Connection # 3 MVA
-5.2
12.8kV
ComEd # 2 MVA
0.0
0kV
Circuit # 2 MVA
0.0
SS Connection # 2MVA
0.0
0kV
SS MVA
6.6
tie line
4.9
12.8kV
SS Connection # 1 MVA
-1.4
CTA/Metra Connection # 2 MVA
6.3
12.9kV
CTA/Metra MVA
2.2
ComEd # 1 MVA
8.9
13kV
Circuit # 1 MVA
0.4
12.9kV
CTA/Metra Connection # 1 MVA
-8.5

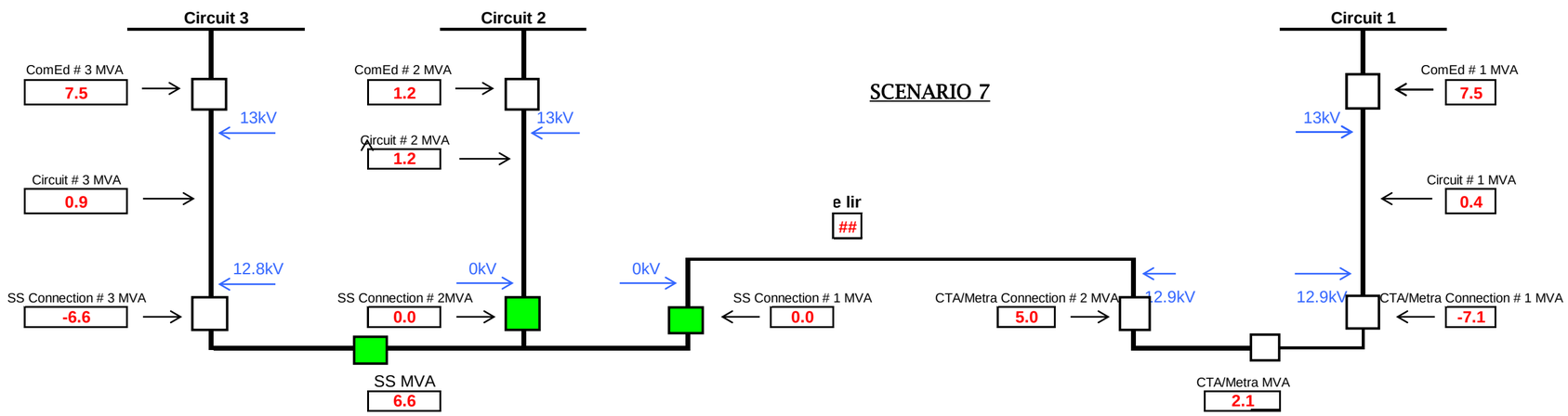
SCENARIO 7
Circuit 3
Circuit 2
Circuit 1
ComEd # 3 MVA
7.5
13kV
Circuit # 3 MVA
0.9
12.8kV
SS Connection # 3 MVA
-6.6
ComEd # 2 MVA
1.2
13kV
Circuit # 2 MVA
1.2
0kV
SS Connection # 2MVA
0.0
SS MVA
6.6
0kV
e lir
##
SS Connection # 1 MVA
0.0
CTA/Metra Connection # 2 MVA
5.0
12.9kV
CTA/Metra MVA
2.1
ComEd # 1 MVA
7.5
13kV
Circuit # 1 MVA
0.4
12.9kV
CTA/Metra Connection # 1 MVA
-7.1

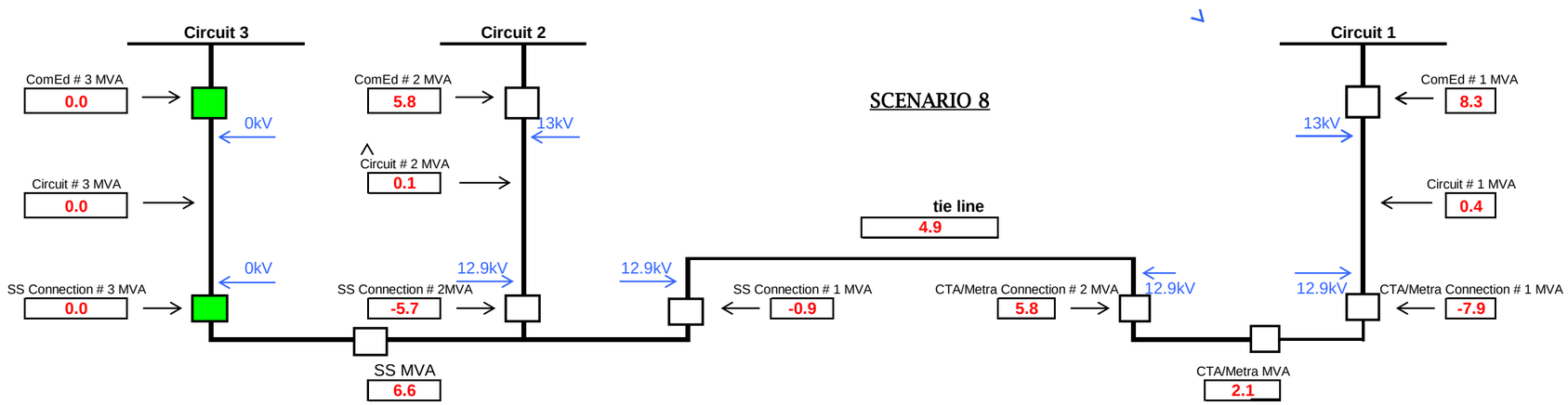
SCENARIO 8
Circuit 3
Circuit 2
Circuit 1
ComEd # 3 MVA
0.0
0kV
Circuit # 3 MVA
0.0
0kV
SS Connection # 3 MVA
0.0
ComEd # 2 MVA
5.8
13kV
Circuit # 2 MVA
0.1
12.9kV
SS Connection # 2MVA
-5.7
SS MVA
6.6
12.9kV
tie line
4.9
SS Connection # 1 MVA
-0.9
CTA/Metra Connection # 2 MVA
5.8
12.9kV
CTA/Metra MVA
2.1
ComEd # 1 MVA
8.3
13kV
Circuit # 1 MVA
0.4
12.9kV
CTA/Metra Connection # 1 MVA
-7.9

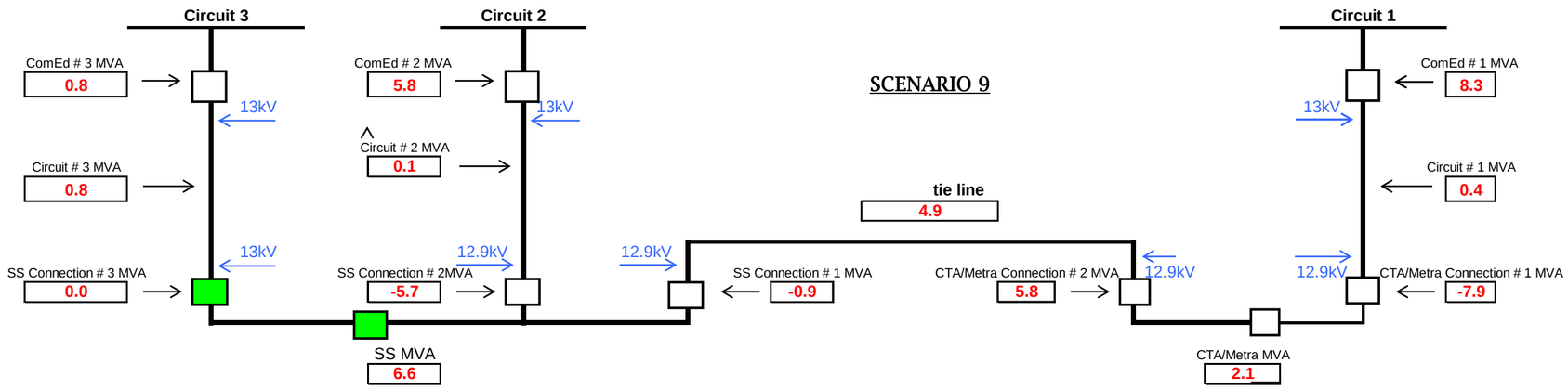
SCENARIO 9
Circuit 3
Circuit 2
Circuit 1
ComEd # 3 MVA
0.8
13kV
Circuit # 3 MVA
0.8
13kV
SS Connection # 3 MVA
0.0
ComEd # 2 MVA
5.8
13kV
Circuit # 2 MVA
0.1
12.9kV
SS Connection # 2MVA
-5.7
SS MVA
6.6
12.9kV
tie line
4.9
SS Connection # 1 MVA
-0.9
CTA/Metra Connection # 2 MVA
5.8
12.9kV
CTA/Metra MVA
2.1
ComEd # 1 MVA
8.3
13kV
Circuit # 1 MVA
0.4
12.9kV
CTA/Metra Connection # 1 MVA
-7.9

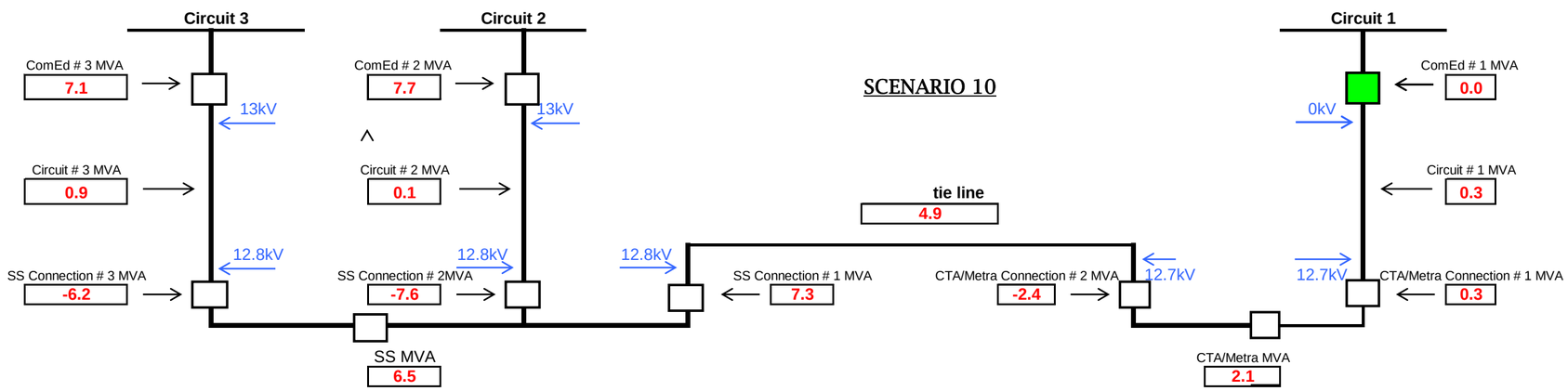
SCENARIO 10
Circuit 3
Circuit 2
Circuit 1
ComEd # 3 MVA
7.1
13kV
Circuit # 3 MVA
0.9
12.8kV
SS Connection # 3 MVA
-6.2
ComEd # 2 MVA
7.7
13kV
Circuit # 2 MVA
0.1
12.8kV
SS Connection # 2MVA
-7.6
SS MVA
6.5
12.8kV
tie line
4.9
SS Connection # 1 MVA
7.3
CTA/Metra Connection # 2 MVA
-2.4
12.7kV
CTA/Metra MVA
2.1
ComEd # 1 MVA
0.0
0kV
Circuit # 1 MVA
0.3
12.7kV
CTA/Metra Connection # 1 MVA
0.3

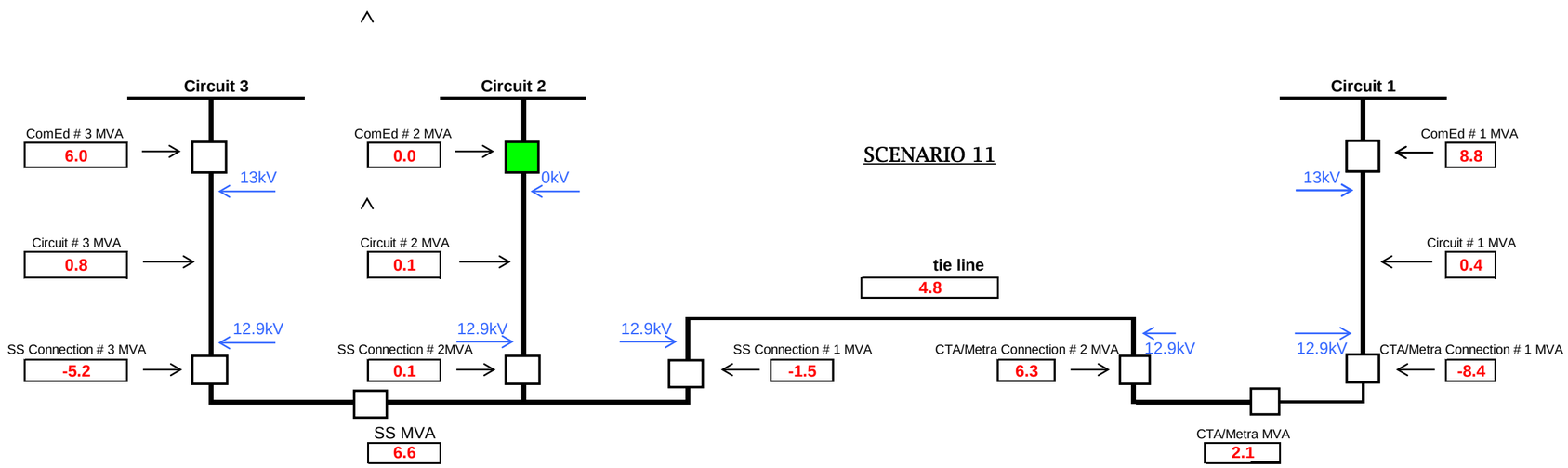
SCENARIO 11
Circuit 3
Circuit 2
Circuit 1
ComEd # 3 MVA
6.0
13kV
ComEd # 2 MVA
0.0
0kV
ComEd # 1 MVA
8.8
13kV
Circuit # 3 MVA
0.8
Circuit # 2 MVA
0.1
Circuit # 1 MVA
0.4
tie line
4.8
12.9kV
SS Connection # 3 MVA
-5.2
12.9kV
SS Connection # 2MVA
0.1
12.9kV
SS Connection # 1 MVA
-1.5
CTA/Metra Connection # 2 MVA
6.3
12.9kV
12.9kV
CTA/Metra Connection # 1 MVA
-8.4
SS MVA
6.6
CTA/Metra MVA
2.1

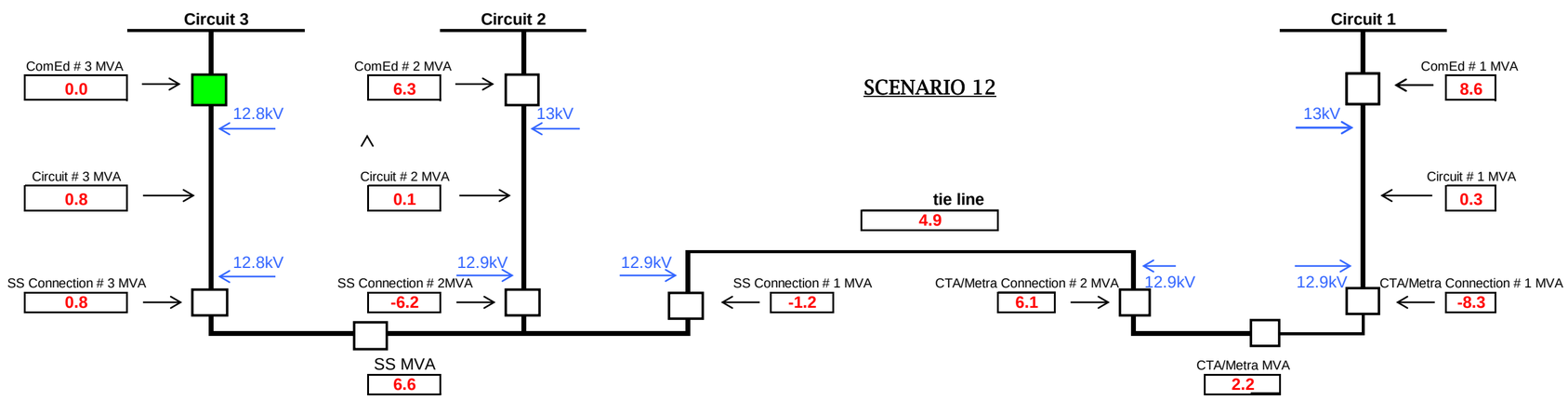
SCENARIO 12
Circuit 3
Circuit 2
Circuit 1
ComEd # 3 MVA
0.0
12.8kV
ComEd # 2 MVA
6.3
13kV
ComEd # 1 MVA
8.6
13kV
Circuit # 3 MVA
0.8
Circuit # 2 MVA
0.1
Circuit # 1 MVA
0.3
tie line
4.9
12.8kV
SS Connection # 3 MVA
0.8
12.9kV
SS Connection # 2MVA
-6.2
12.9kV
SS Connection # 1 MVA
-1.2
CTA/Metra Connection # 2 MVA
6.1
12.9kV
12.9kV
CTA/Metra Connection # 1 MVA
-8.3
SS MVA
6.6
CTA/Metra MVA
2.2

BBB CYME Study Information

- At [redacted], [redacted] substation, load was obtained from Cedar Loads. Peak load for each feeding line is [redacted] with assumed [redacted].

- At [redacted], [redacted] Substation, peak load for [redacted] and [redacted] was obtained from APT data on [redacted], [redacted] kVA and [redacted] kVA respectively.

- At [redacted] assumed load demand of [redacted] kVA at PF=[redacted]. ((From load information provided by CIMS and Cedar).

- [redacted] APT load information used.
  - [redacted] APT selected load date: [redacted]
  - [redacted] APT actual load on [redacted]
  - [redacted] APT WA on selected load date: [redacted]
  - [redacted] WA load: [redacted]

- [redacted] APT load information used.
  - [redacted] APT selected load date: [redacted]
  - [redacted] APT actual load on [redacted]
  - [redacted] APT WA on selected load date: [redacted]
  - [redacted] WA load: [redacted]

- [redacted] APT load information used.
  - [redacted] APT selected load date: [redacted]
  - [redacted] APT actual load on [redacted]
  - [redacted] APT WA on selected load date: [redacted]
  - [redacted] WA load: [redacted]

- [redacted] load allocation method
  - Validate in the CYME model all transformers, ESS loads, including [redacted] for each feeding line at [redacted] per Cedar meter information.

  - Open node #489287993 (zero point#1) and section #3093 (zero point #2). This allowed for proper load allocation on the feeders.

  - Enter feeder loads: [redacted] for [redacted] (Avg. WA [redacted] plus the [redacted] contributed to [redacted] and [redacted]), [redacted] for [redacted] (Avg. WA [redacted] plus [redacted] contributed to [redacted] minus [redacted] supported from [redacted]), [redacted] for [redacted] (Avg. WA [redacted] minus [redacted] supported from [redacted], minus [redacted] supported from [redacted]).

- Power factor of [redacted] for [redacted] and [redacted] and [redacted] for [redacted] were used during allocation so as to obtain an adjusted load PF of [redacted] on all feeders.

- Close zero-points and run analysis.

- Physical midpoint kV on feeder [redacted] is taken at section 489441217 and physical endpoint kV is taken at section 489433764.

- Physical midpoint kV on feeder [redacted] is taken at section 489354636 and physical endpoint kV is taken at section 489283905.

- Physical midpoint kV on feeder [redacted] is taken at section 489354629 and physical endpoint kV is taken at section 146849870.

BBB CYME Study Results

Scenario	1	2	3	4	5	6	7
@ CTA -Connection #1 (MVA)	-6.7	0	0	-2.2	-2.2	-8.5	-7.1
@ CTA - Connection #2 (MVA)	4.5	-2.1	-2.1	0	0	6.3	5.0
@ SS -Connection #1 (MVA)	0.5	7.0	7.0	0	4.9	-1.4	0
@ SS - Connection #2 (MVA)	-4.0	-7.5	-7.5	-3.8	-6.3	0	0
@ SS - Connection #3 (MVA)	-3.0	-6.1	-6.1	-2.8	-5.1	-5.2	-6.6
@ ComEd - Circuit #1 (MVA)	7.0	0	0.3	2.5	2.5	8.9	7.5
@ ComEd - Circuit #2 (MVA)	4.1	7.6	7.6	3.9	6.4	0	1.2
@ ComEd - Circuit #3 (MVA)	3.8	6.9	6.9	3.6	5.9	6.1	7.5
@ CTA - Connection #1 (kV)	12.9	0	13.0	13.0	13.0	12.9	12.9
@ CTA - Connection #2 (kV)	12.9	12.7	12.7	0	12.8	12.9	12.9
@ SS - Connection #1 (kV)	12.9	12.8	12.8	0	12.8	12.8	0
@ SS - Connection #2 (kV)	12.9	12.8	12.8	12.9	12.8	0	0
@ SS - Connection #3 (kV)	12.9	12.8	12.8	12.9	12.8	12.8	12.8
@ ComEd - Circuit #1 (kV)	13.0	0	13.0	13.0	13.0	13.0	13.0
@ ComEd - Circuit #2 (kV)	13.0	13.0	13.0	13.0	13.0	0	13.0
@ ComEd - Circuit #3 (kV)	13.0	13.0	13.0	13.0	13.0	13.0	13.0
@ ComEd - Circuit #1 Midpoint (kV)	13.0	0	13.0	13.0	13.0	12.9	13.0
@ ComEd - Circuit #1 Endpoint (kV)	12.9	0	13.0	13.0	13.0	12.9	12.9
@ ComEd - Circuit #2 Midpoint (kV)	13.0	12.9	12.9	13.0	12.9	0	13.0
@ ComEd - Circuit #2 Endpoint (kV)	12.9	12.8	12.8	12.9	12.8	0	13.0
@ ComEd - Circuit #3 Midpoint (kV)	13.0	12.9	12.9	13.0	12.9	12.9	12.9
@ ComEd - Circuit #3 Endpoint (kV)	12.9	12.9	12.9	12.9	12.9	12.9	12.9

8	**-7.9**	**5.8**	**-0.9**	**-5.7**	**0**	**8.3**	**5.8**	**0**	**12.9**	**12.9**	**12.9**	**12.9**	**0**	**13.0**	**13.0**	**0**	**12.9**	**12.9**	**12.9**	**12.9**	**0**	**0**
9	**-7.9**	**5.8**	**-0.9**	**-5.7**	**0**	**8.3**	**5.8**	**0.8**	**12.9**	**12.9**	**12.9**	**12.9**	**13.0**	**13.0**	**13.0**	**13.0**	**12.9**	**12.9**	**12.9**	**12.9**	**13.0**	**13.0**
10	**0.3**	**-2.4**	**7.3**	**-7.6**	**-6.2**	**0**	**7.7**	**7.1**	**12.7**	**12.7**	**12.8**	**12.8**	**12.8**	**0**	**13.0**	**13.0**	**12.7**	**12.7**	**12.9**	**12.8**	**12.9**	**12.9**
11	**-8.4**	**6.3**	**-1.5**	**0.1**	**-5.2**	**8.8**	**0**	**6.0**	**12.9**	**12.9**	**12.9**	**12.9**	**12.9**	**13.0**	**0**	**13.0**	**12.9**	**12.9**	**12.9**	**12.8**	**12.9**	**12.9**
12	**-8.3**	**6.1**	**-1.2**	**-6.2**	**0.8**	**8.6**	**6.3**	**0**	**12.9**	**12.9**	**12.9**	**12.9**	**12.8**	**13.0**	**13.0**	**12.8**	**12.9**	**12.9**	**12.9**	**12.9**	**12.8**	**12.8**

Scenario:

Scenario 1: @ CTA/Metra connection #1 and #2 closed, @ ComEd circuit #1, #2 and #3 closed, @ SS[redacted] connection #1, #2 and #3 closed. This represents the normal condition.

Scenario 2: @ CTA/Metra connection #1 open and #2 closed, @ ComEd circuit #1 open and #2 and #3 closed, @SS[redacted] connection #1, #2 and #3 closed. This represents an outage of ComEd circuit #1.

Scenario 3: @ CTA/Metra connection #1 and bus tie open and #2 closed, @ ComEd circuit #1, #2 and #3 closed, @SS[redacted] connection #1, #2 and #3 closed. This represents an outage of CTA/Metra Bus #1.

Scenario 4: @ CTA/Metra connection #1 closed and #2 open, @ ComEd circuit #1, #2 and #3 closed, @SS[redacted] connection #1 open, #2 and #3 closed. This represents an outage of ComEd tie line.

Scenario 5: @ CTA/Metra connection #1 closed and #2 and bus tie open, @ ComEd circuit #1,#2 and #3 closed , @SS[redacted] connection #1, #2 and #3 closed This represents an outage of CTA/Metra Bus #2.

Scenario 6: @ CTA/Metra connection #1 and #2 closed, @ ComEd circuit #1 and #3 closed and #2 open , @SS[redacted] connection #1 and #3 closed, #2 open. This represents an outage of ComEd circuit #2.

Scenario 7: @ CTA/Metra connection #1 and #2 closed, @ ComEd circuit #1, #2 and #3 closed, @SS[redacted] connection #1, #2 and bus tie open, #3 closed. This represents an outage of SS[redacted] Bus #1.

Scenario 8: @ CTA/Metra connection #1 and #2 closed, @ ComEd circuit #1 and #2 closed and #3 open, @SS[redacted] connection #1 and #2 closed, #3 open. This represents an outage of ComEd circuit #3.

Scenario 9: @ CTA/Metra connection #1 and #2 closed @ ComEd circuit #1, #2 and #3 closed, @SS[redacted] connection #1,#2 closed, #3 and bus tie open. This represents an outage of SS[redacted] Bus #2.

Scenario 10: @ CTA/Metra connection #1 and #2 closed, @ ComEd circuit #2 and #3 closed and #1 open, @SS[redacted] connection #1, #2 and #3 closed. This represents loss of source for ComEd circuit #1.

Scenario 11: @ CTA/Metra connection #1 and #2 closed, @ ComEd circuit #1 and #3 closed, #2 open, @SS[redacted] connection #1, #2 and #3 closed. This represents loss of source for ComEd circuit #2.

Scenario 12: @ CTA/Metra connection #1 and #2 closed, @ ComEd circuit #1 and #2 closed and #3 open, @SS[redacted] connection #1, #2 and #3 closed. This represents loss of source for ComEd circuit #3.

CONFIDENTIAL AND PROPRIETARY - CEII

BBB SUBSTATION

C Cyme Study Results

Scenario	@ CTA / Metra - Connection #1 (MVA)	@ CTA / Metra - Connection #2 (MVA)	@ ComEd - Circuit #1 (MVA)	@ ComEd - Circuit #2 (MVA)	@ CTA / Metra - Connection #1 (kV)	@ CTA / Metra - Connection #2 (kV)	@ ComEd - Circuit #1 (kV)	@ ComEd - Circuit #2 (kV)
1	-0.5	-1.6	4.6	3.4	12.4	12.4	12.5	12.5
2	0.0	-2.0	0.0	3.8	0.0	12.4	0.0	12.5
3	0.0	-2.0	4.3	3.8	12.4	12.4	12.5	12.5
4	-2.0	0.0	6.2	0.0	12.3	0.0	12.4	0.0
5	-2.0	0.0	6.2	2.0	12.3	12.5	12.4	12.5
6	4.3	-6.2	0.0	8.2	12.2	12.2	12.1	12.4
7	-3.8	2.0	8.1	0.0	12.2	12.2	12.4	12.2
8	0.7	-1.4	4.8	4.1	12.4	12.4	12.5	12.5

C Cyme Results Comparison

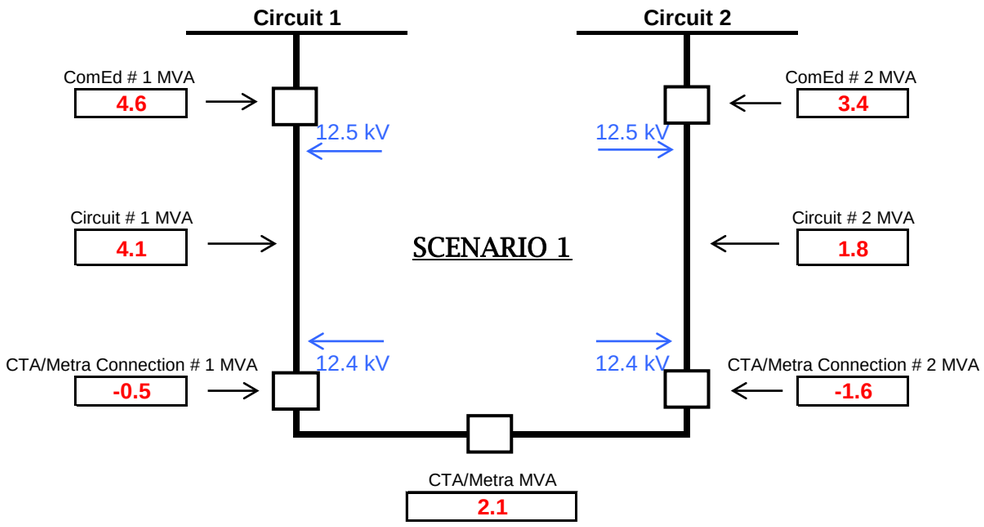

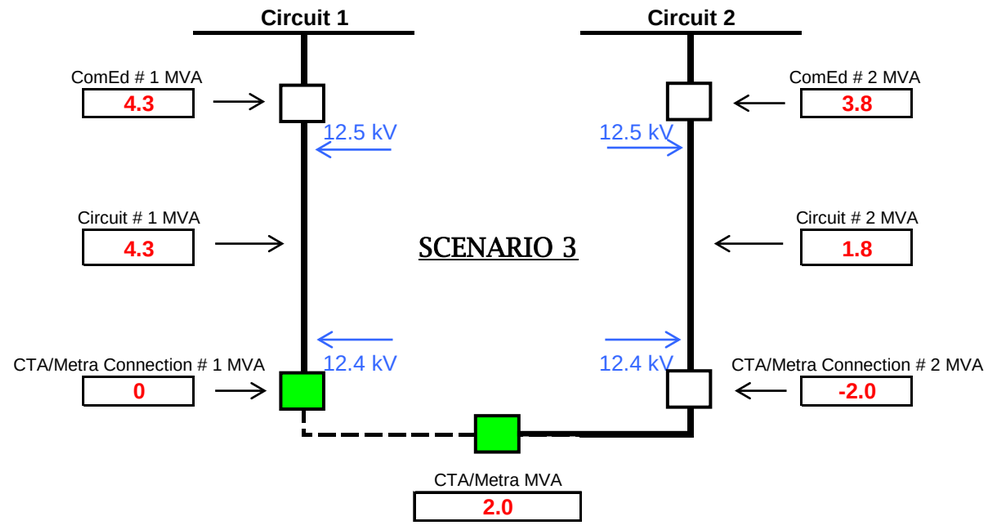

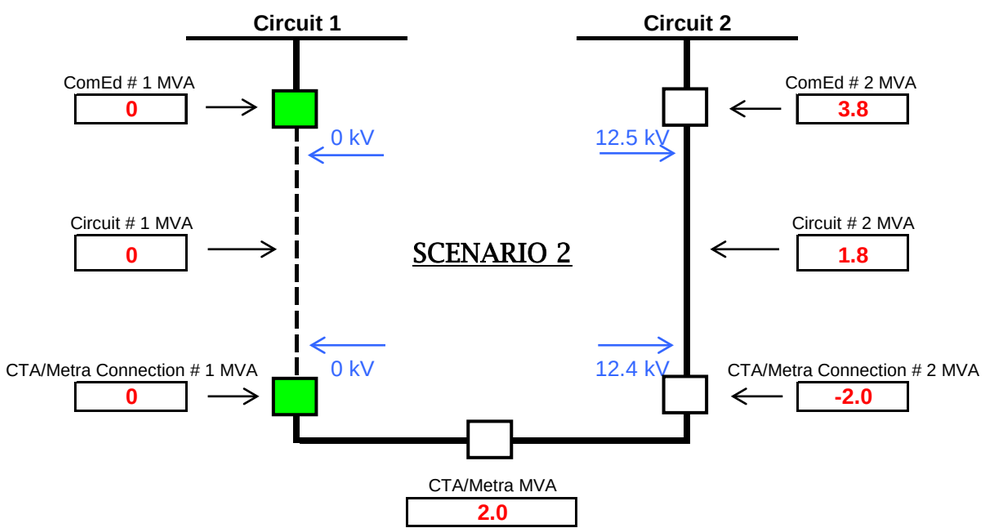

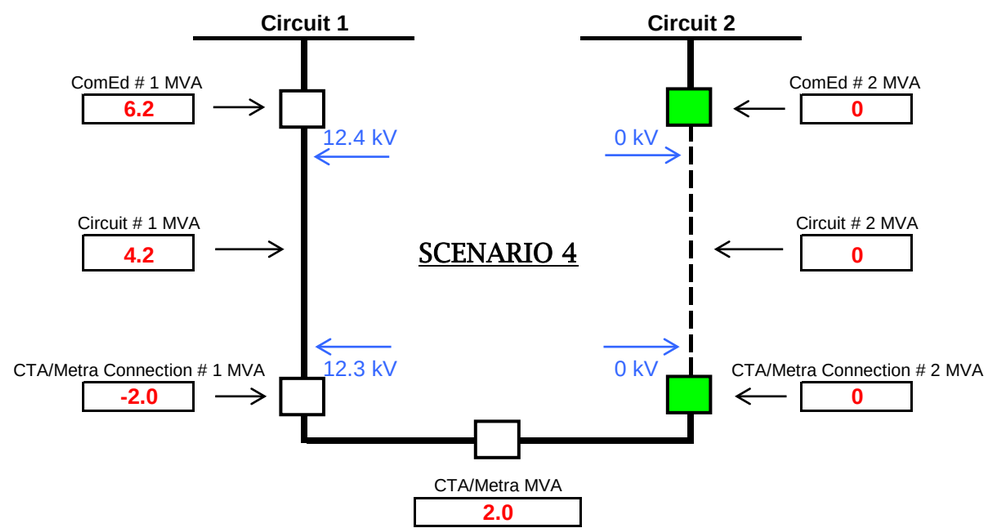

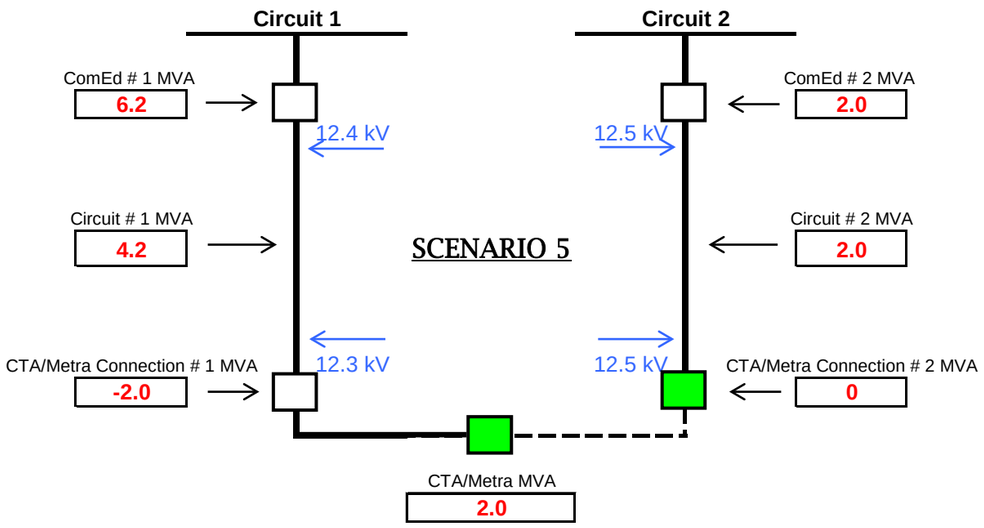
Circuit 1
Circuit 2
ComEd # 1 MVA
6.2
12.4 kV
12.5 kV
ComEd # 2 MVA
2.0
Circuit # 1 MVA
4.2
SCENARIO 5
Circuit # 2 MVA
2.0
CTA/Metra Connection # 1 MVA
-2.0
12.3 kV
12.5 kV
CTA/Metra Connection # 2 MVA
0
CTA/Metra MVA
2.0

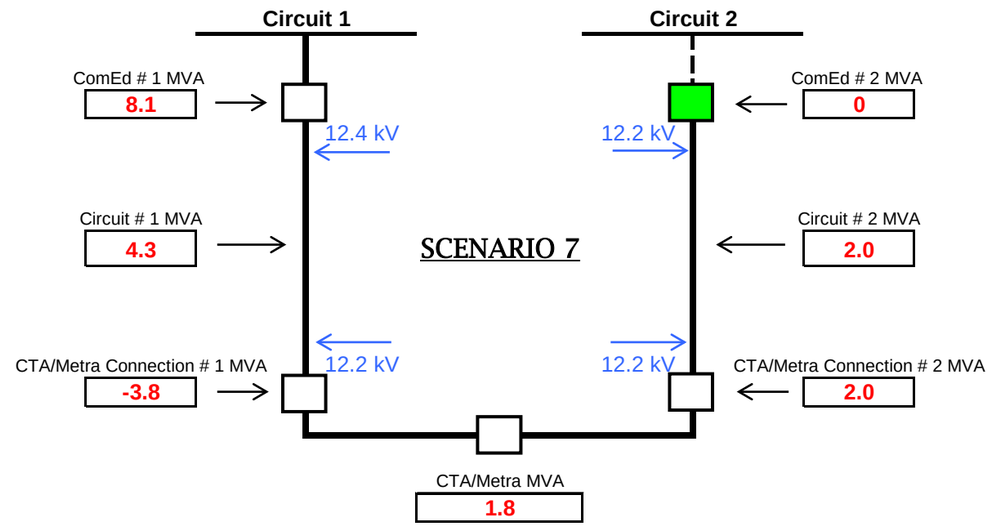
Circuit 1
Circuit 2
ComEd # 1 MVA
8.1
12.4 kV
12.2 kV
ComEd # 2 MVA
0
Circuit # 1 MVA
4.3
SCENARIO 7
Circuit # 2 MVA
2.0
CTA/Metra Connection # 1 MVA
-3.8
12.2 kV
12.2 kV
CTA/Metra Connection # 2 MVA
2.0
CTA/Metra MVA
1.8

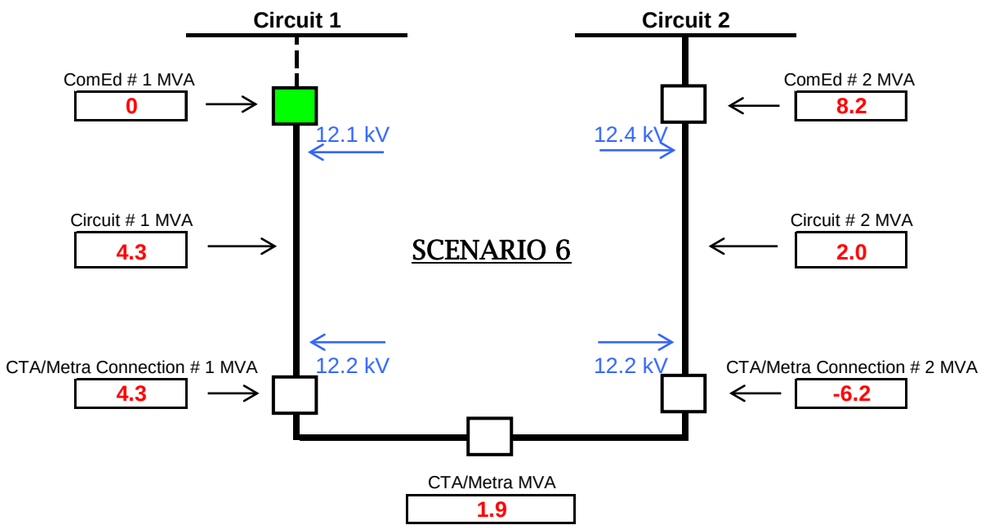
Circuit 1
Circuit 2
ComEd # 1 MVA
0
12.1 kV
12.4 kV
ComEd # 2 MVA
8.2
Circuit # 1 MVA
4.3
SCENARIO 6
Circuit # 2 MVA
2.0
CTA/Metra Connection # 1 MVA
4.3
12.2 kV
12.2 kV
CTA/Metra Connection # 2 MVA
-6.2
CTA/Metra MVA
1.9

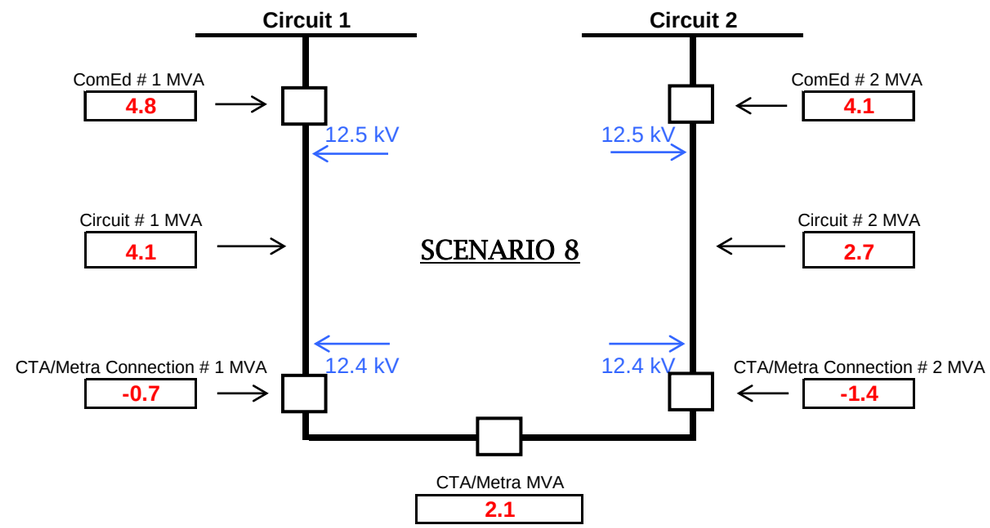
Circuit 1
Circuit 2
ComEd # 1 MVA
4.8
12.5 kV
12.5 kV
ComEd # 2 MVA
4.1
Circuit # 1 MVA
4.1
SCENARIO 8
Circuit # 2 MVA
2.7
CTA/Metra Connection # 1 MVA
-0.7
12.4 kV
12.4 kV
CTA/Metra Connection # 2 MVA
-1.4
CTA/Metra MVA
2.1

C CYME Study Information

- [redacted] is a [redacted] phase temporary transformer used reading of [redacted]% of nameplate [redacted] with [redacted]
- [redacted] load obtained from load feeder report Max summer for [redacted]. Customers for this transformer location are tied to [redacted] in [redacted] with . [redacted] load was obtained from [redacted] via customer [redacted] with [redacted]
- [redacted] load was obtained from [redacted] via customer [redacted] with [redacted]
- [redacted] substation load was obtained from CEDAR load information. Peak load for each feeding line is [redacted] with assumed PF [redacted].

- [redacted] APT load information used.
  - [redacted] APT selected load date: [redacted]
  - [redacted] APT actual load on [redacted]
  - [redacted] APT WA on selected load date: [redacted]
  - [redacted] WA load: [redacted]
- [redacted] APT load information used.
  - [redacted] APT selected load date: [redacted]
  - [redacted] APT actual load on [redacted]
  - [redacted] APT WA on selected load date: [redacted]
  - [redacted] WA load: [redacted]
- [redacted] APT load information used.
  - [redacted] APT selected load date: [redacted]
  - [redacted] APT actual load on [redacted]
  - [redacted] APT WA on selected load date: [redacted]
  - [redacted] WA load: [redacted]

- [redacted] load allocation method
  - Validate in the CYME model all transformers, ESS loads, including [redacted].
  - Inside the [redacted] the breaker for [redacted] was identified as the zero point
  - Enter feeder loads: [redacted]
  - Ignore motors
  - Open [redacted] and allocate the loads.
  - Adjust pf at source [redacted] and allocate to obtain an adjusted load PF [redacted].
  - Close [redacted] and run analysis.

- [redacted] midpoint KV taken at cable section 486200256 and endpoint KV taken at section [redacted].
- [redacted] midpoint KV taken at cable section 486199145 and endpoint KV taken at overhead section 387742575.

Special Simulation: [redacted] abnormally carrying load from [redacted] (approx [redacted]) by the following switching: [redacted]

C CYME Study Results

Scenario	@ CTA -Connection #1 (MVA)	@ CTA - Connection #2 (MVA)	@ ComEd - Circuit #1 (MVA)	@ ComEd - Circuit #2 (MVA)	@ CTA -Connection #1 (kV)	@ CTA - Connection #2 (kV)	@ ComEd - Circuit #1 (kV)	@ ComEd - Circuit #2 (kV)	@ ComEd - Circuit #1 Midpoint (kV)	@ ComEd - Circuit #2 Midpoint (kV)	@ ComEd - Circuit #1 Endpoint (kV)	@ ComEd - Circuit #2 Endpoint (kV)
1	-0.5	-1.6	4.6	3.4	12.4	12.4	12.5	12.5	12.4	12.4	12.4	12.4
2	0.0	-2.0	0.0	3.8	0.0	12.4	0.0	12.5	0.0	12.4	0.0	12.4
3	0.0	-2.0	4.3	3.8	12.4	12.4	12.5	12.5	12.4	12.4	12.4	12.4
4	-2.0	0.0	6.2	0.0	12.3	0.0	12.4	0.0	12.3	0.0	12.3	0.0
5	-2.0	0.0	6.2	2.0	12.3	12.5	12.4	12.5	12.3	12.5	12.3	12.4
6	4.3	-6.2	0.0	8.2	12.2	12.2	12.1	12.4	12.1	12.2	12.2	12.2
7	-3.8	2.0	8.1	0.0	12.2	12.2	12.4	12.2	12.3	12.2	12.2	12.2
8	-0.7	-1.4	4.8	4.1	12.4	12.4	12.5	12.5	12.4	12.4	12.4	12.4

Scenario:

Scenario 1: @ CTA/Metra connection #1 and #2 closed, @ ComEd circuit #1 and #2 closed. This represents the normal condition.

Scenario 2: @ CTA/Metra connection #1 open and #2 closed, @ ComEd circuit #1 open and #2 closed. This represents an outage of ComEd circuit #1.

Scenario 3: @ CTA/Metra connection #1 and bus tie open and #2 closed, @ ComEd circuit #1 and #2 closed. This represents an outage of CTA/Metra Bus #1.

Scenario 4: @ CTA/Metra connection #1 closed and #2 open, @ ComEd circuit #1 closed and #2 open. This represents an outage of ComEd circuit #2.

Scenario 5: @ CTA/Metra connection #1 closed and #2 and bus tie open, @ ComEd circuit #1 and #2 closed. This represents an outage of CTA/Metra Bus #2.

Scenario 6: @ CTA/Metra connection #1 and #2 closed, @ ComEd circuit #1 open and #2 closed. This represents loss of source for ComEd circuit #1.

Scenario 7: @ CTA/Metra connection #1 and #2 closed, @ ComEd circuit #1 closed and #2 open. This represents loss of source for ComEd circuit #2.

Scenario 8: @ CTA/Metra connection #1 and #2 closed, @ ComEd circuit #1 closed and #2 closed. Transferring load from [redacted] to [redacted]: open [redacted], open [redacted] and [redacted].

CONFIDENTIAL AND PROPRIETARY - CEII

C SUBSTATION

CC and LLL CYME Study Results

Scenario	@ CTA Connection #1 (MVA)	@ CTA Connection #2 (MVA)	@ CTA Connection #3 (MVA)	@ CTA Connection #4 (MVA)	@ ComEd Circuit #1 (MVA))	@ ComEd Circuit #2 (MVA)	@ CTA Connection #1 (kV)	@ CTA Connection #2 (kV)	@ CTA Connection #3 (kV)	@ CTA Connection #4 (kV)	@ ComEd Circuit #1 (kV)	@ ComEd Circuit #2 (kV)
1	-5.0	-0.3	0.3	-1.2	4.7	3.7	12.4	12.4	12.4	12.4	12.5	12.5
2	0.0	-5.2	5.2	-6.2	0.0	8.9	0.0	12.0	12.1	12.1	0.0	12.5
3	0.0	-5.2	5.2	-6.2	0.7	8.9	12.5	12.0	12.1	12.1	12.5	12.5
4	-5.2	0.0	0.2	-1.0	5.0	3.4	12.4	12.4	12.4	12.4	12.5	12.5
5	-6.1	1.0	-1.0	0.0	6.0	0.0	12.4	12.4	12.3	0.0	12.5	0.0
6	-5.1	0.2	0.0	-1.0	4.9	3.5	12.4	12.4	12.4	12.4	12.5	12.5
7	-6.1	1.0	-1.0	0.0	6.0	2.5	12.4	12.4	12.3	12.4	12.5	12.5
8	0.7	-5.0	5.0	-5.9	0.0	8.6	12.1	12.1	12.2	12.2	12.1	12.5
9	-8.6	3.4	-3.4	2.5	8.6	0.0	12.3	12.3	12.2	12.2	12.5	12.2
10	-5.2	0.0	0.0	-1.0	5.0	3.5	12.4	0.0	12.4	12.4	12.5	12.5
11												

CC and LLL Cyme Results Comparison

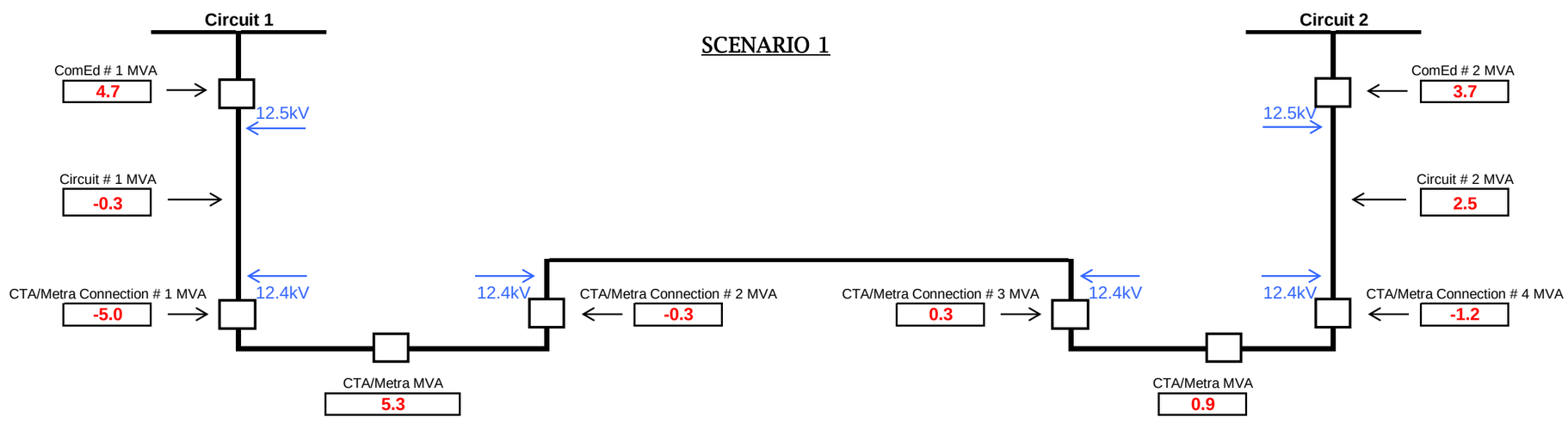

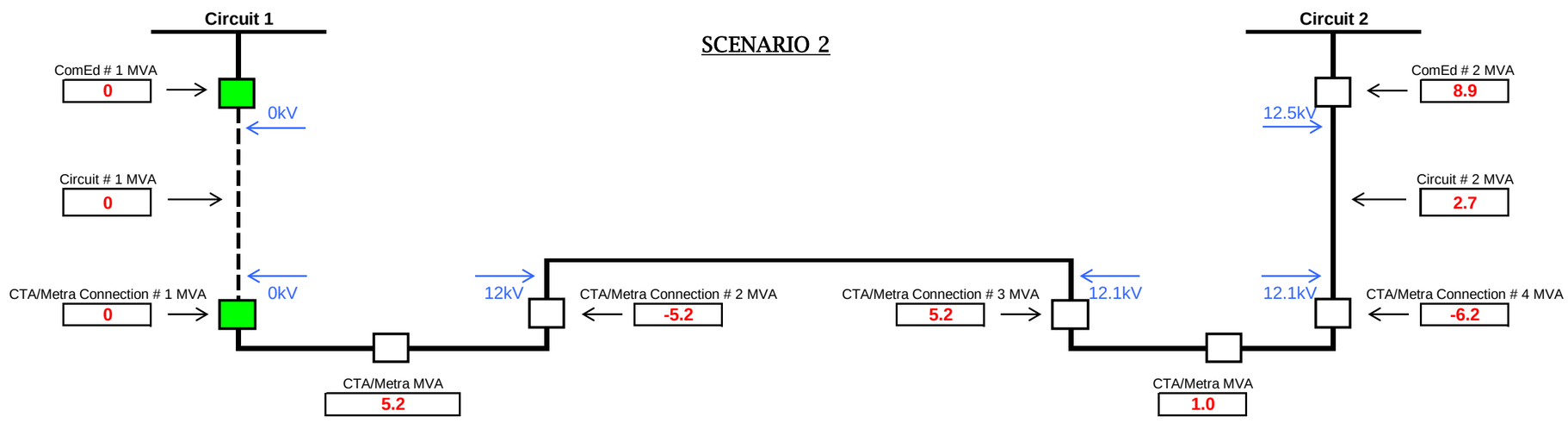

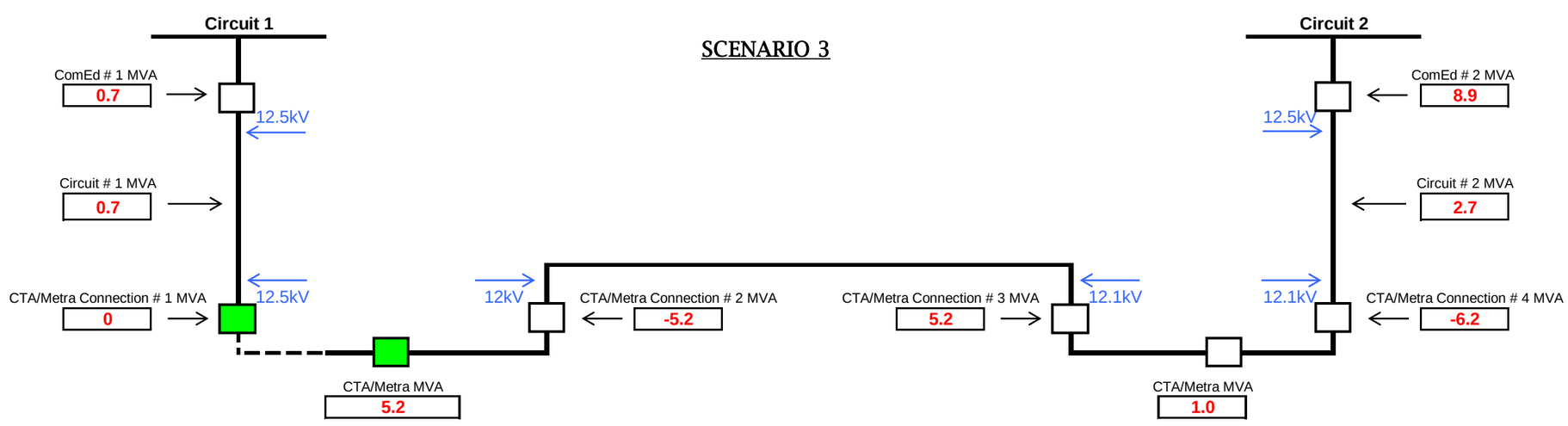

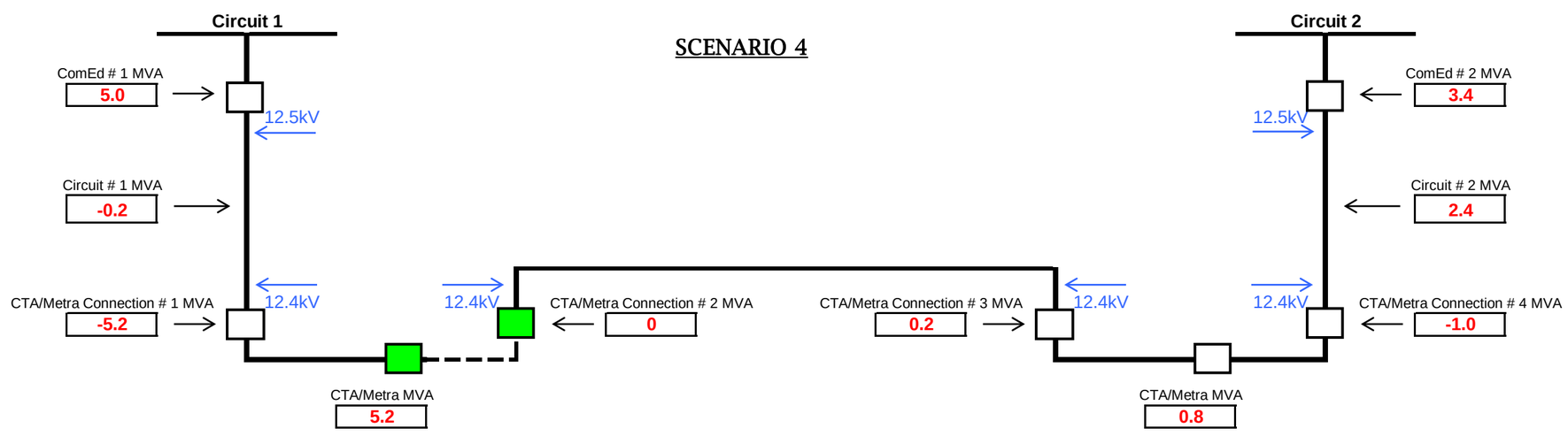
SCENARIO 4
Circuit 1
Circuit 2
ComEd # 1 MVA
5.0
12.5kV
Circuit # 1 MVA
-0.2
CTA/Metra Connection # 1 MVA
-5.2
12.4kV
12.4kV
CTA/Metra Connection # 2 MVA
0
CTA/Metra Connection # 3 MVA
0.2
12.4kV
12.4kV
CTA/Metra Connection # 4 MVA
-1.0
ComEd # 2 MVA
3.4
12.5kV
Circuit # 2 MVA
2.4
CTA/Metra MVA
5.2
CTA/Metra MVA
0.8

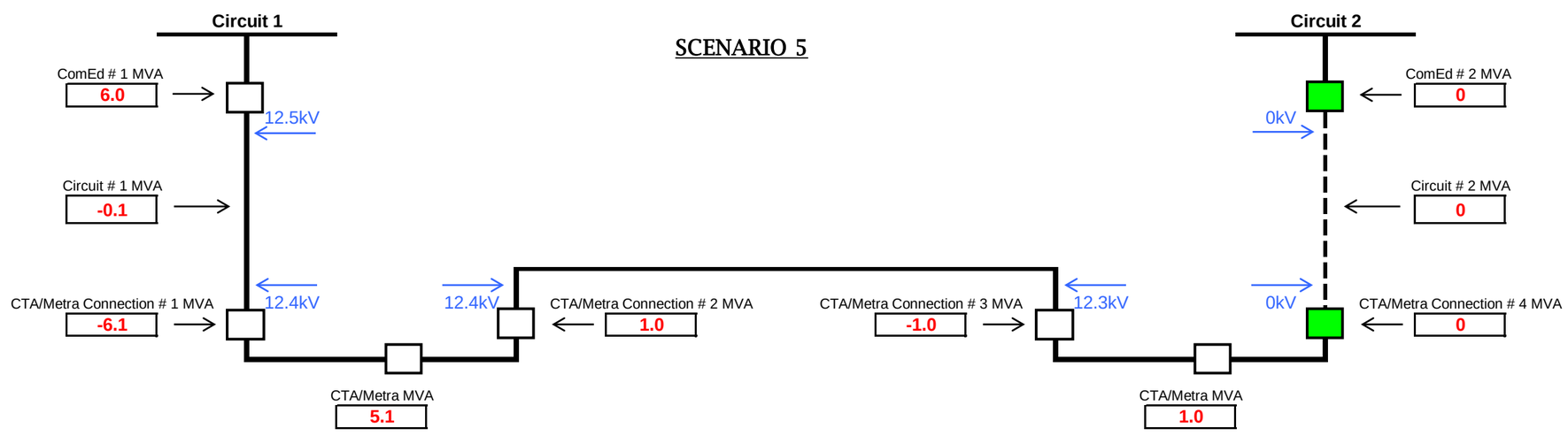
SCENARIO 5
Circuit 1
Circuit 2
ComEd # 1 MVA
6.0
12.5kV
Circuit # 1 MVA
-0.1
CTA/Metra Connection # 1 MVA
-6.1
12.4kV
12.4kV
CTA/Metra Connection # 2 MVA
1.0
CTA/Metra Connection # 3 MVA
-1.0
12.3kV
0kV
0kV
CTA/Metra Connection # 4 MVA
0
ComEd # 2 MVA
0
Circuit # 2 MVA
0
CTA/Metra MVA
5.1
CTA/Metra MVA
1.0

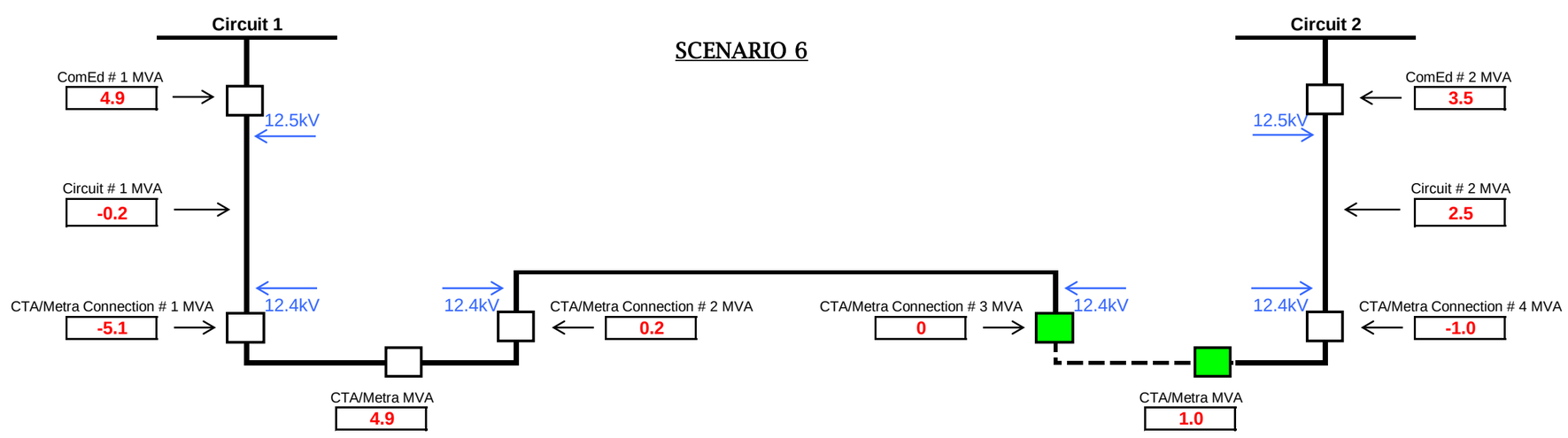
SCENARIO 6
Circuit 1
Circuit 2
ComEd # 1 MVA
4.9
12.5kV
Circuit # 1 MVA
-0.2
CTA/Metra Connection # 1 MVA
-5.1
12.4kV
12.4kV
CTA/Metra Connection # 2 MVA
0.2
CTA/Metra Connection # 3 MVA
0
12.4kV
12.4kV
CTA/Metra Connection # 4 MVA
-1.0
ComEd # 2 MVA
3.5
12.5kV
Circuit # 2 MVA
2.5
CTA/Metra MVA
4.9
CTA/Metra MVA
1.0

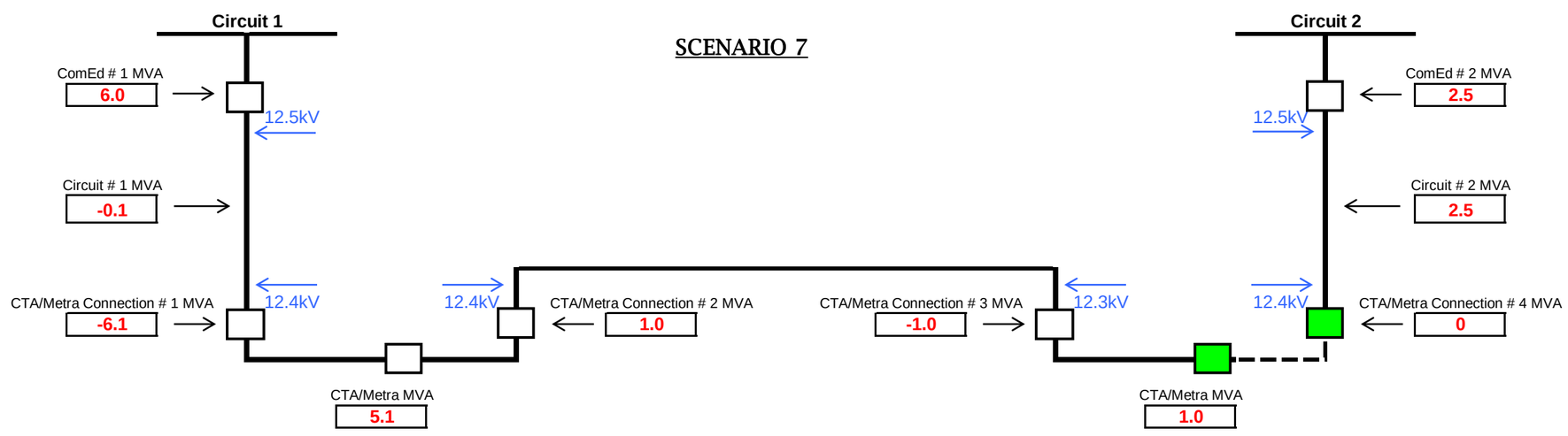
SCENARIO 7
Circuit 1
Circuit 2
ComEd # 1 MVA
6.0
12.5kV
Circuit # 1 MVA
-0.1
CTA/Metra Connection # 1 MVA
-6.1
12.4kV
12.4kV
CTA/Metra Connection # 2 MVA
1.0
CTA/Metra Connection # 3 MVA
-1.0
12.3kV
12.4kV
CTA/Metra Connection # 4 MVA
0
ComEd # 2 MVA
2.5
12.5kV
Circuit # 2 MVA
2.5
CTA/Metra MVA
5.1
CTA/Metra MVA
1.0

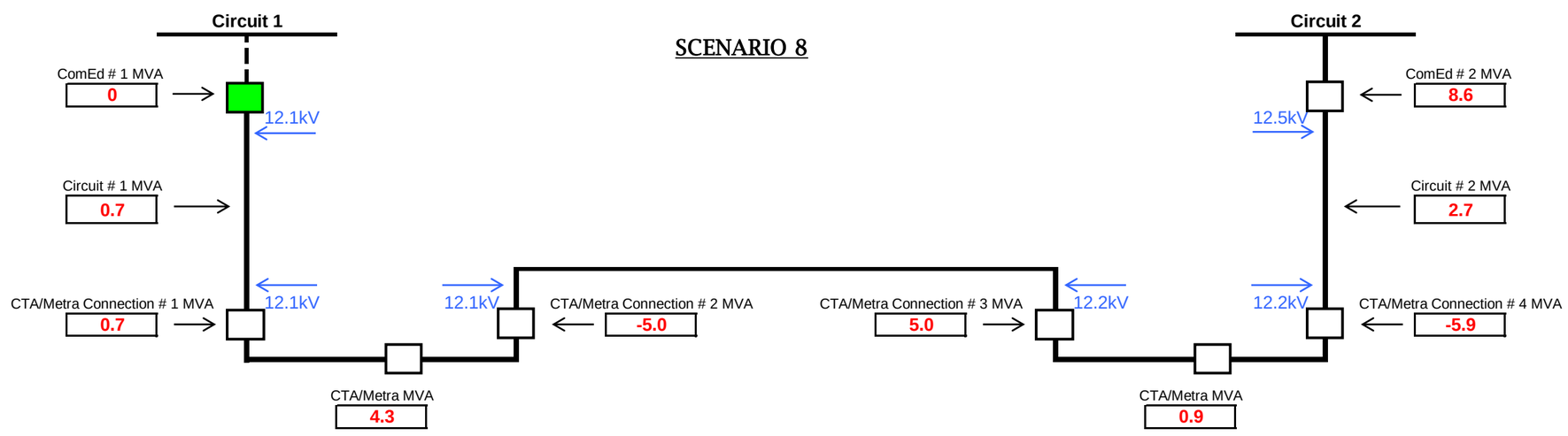
SCENARIO 8
Circuit 1
Circuit 2
ComEd # 1 MVA
0
12.1kV
Circuit # 1 MVA
0.7
CTA/Metra Connection # 1 MVA
0.7
12.1kV
12.1kV
CTA/Metra Connection # 2 MVA
-5.0
CTA/Metra Connection # 3 MVA
5.0
12.2kV
12.2kV
CTA/Metra Connection # 4 MVA
-5.9
ComEd # 2 MVA
8.6
12.5kV
Circuit # 2 MVA
2.7
CTA/Metra MVA
4.3
CTA/Metra MVA
0.9

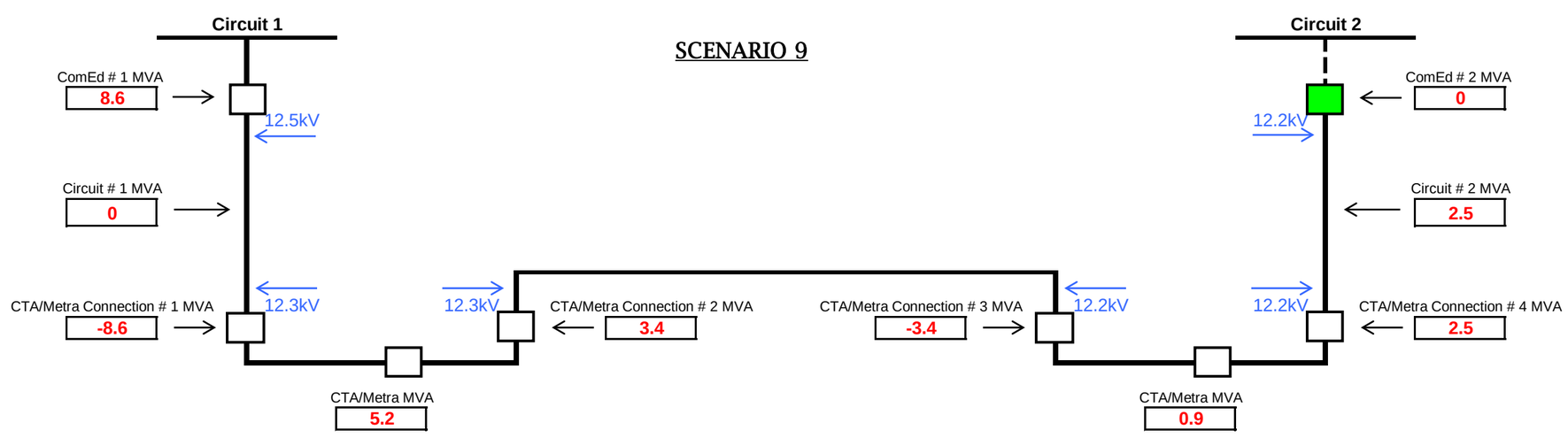
SCENARIO 9
Circuit 1
Circuit 2
ComEd # 1 MVA
8.6
12.5kV
Circuit # 1 MVA
0
CTA/Metra Connection # 1 MVA
-8.6
12.3kV
12.3kV
CTA/Metra Connection # 2 MVA
3.4
CTA/Metra Connection # 3 MVA
-3.4
12.2kV
12.2kV
CTA/Metra Connection # 4 MVA
2.5
ComEd # 2 MVA
0
12.2kV
Circuit # 2 MVA
2.5
CTA/Metra MVA
5.2
CTA/Metra MVA
0.9

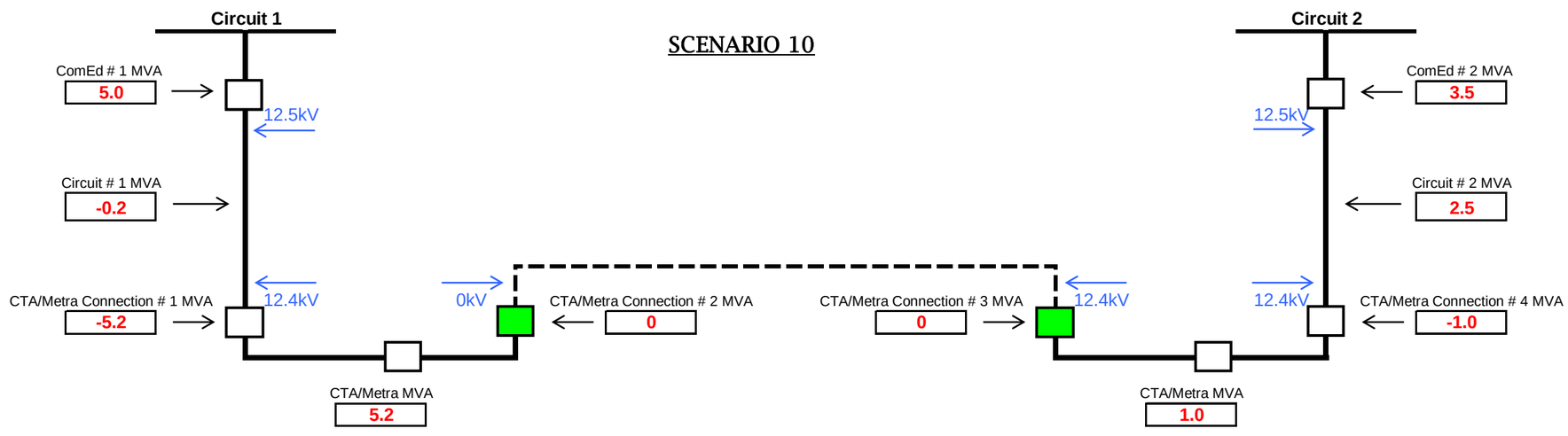
SCENARIO 10
Circuit 1
Circuit 2
ComEd # 1 MVA
5.0
12.5kV
Circuit # 1 MVA
-0.2
CTA/Metra Connection # 1 MVA
-5.2
12.4kV
0kV
CTA/Metra Connection # 2 MVA
0
CTA/Metra Connection # 3 MVA
0
12.4kV
12.4kV
CTA/Metra Connection # 4 MVA
-1.0
CTA/Metra MVA
5.2
CTA/Metra MVA
1.0
ComEd # 2 MVA
3.5
12.5kV
Circuit # 2 MVA
2.5

CC and LLL CYME Study Information

- Loads for all ESS / CTL were assumed according to proportional distribution of APT load information (proportional to nameplate ratings of all transformers). Loads assumed at PF=[redacted].

- [redacted] ([redacted]) substation load was obtained from Cedar Loads. Peak load for each feeding line is [redacted] KVA with assumed PF=[redacted].

- [redacted] ([redacted]) substation load was obtained from Cedar Loads. Peak load for each feeding line is [redacted] KVA with assumed PF=[redacted].

- [redacted] APT load information used.
  - [redacted] APT selected load date: [redacted]
  - [redacted] APT actual load on [redacted] ➔ [redacted]
  - [redacted] APT WA on selected load date: [redacted]
  - [redacted] WA load: [redacted] ➔ [redacted]

- [redacted] APT load information used.
  - [redacted] APT selected load date: [redacted]
  - [redacted] APT actual load on [redacted] ➔ [redacted]
  - [redacted] APT WA on selected load date: [redacted]
  - [redacted] WA load: [redacted] ➔ [redacted]

- [redacted] and [redacted] load allocation method
  - Validate in the CYME model all transformers, ESS loads, including [redacted] KVA for each feeding line at [redacted] and [redacted]KVA for each feeding line at [redacted] [redacted] per Cedar meter information.
  - Breaker #[redacted] at [redacted] on feeder [redacted] identified as zero point where [redacted] is supported by feeder [redacted] to the load on the feeder [redacted]. This allowed for proper load allocation on the two feeders.
  - Enter feeder loads: [redacted] **for** [redacted] (Avg WA [redacted] minus the [redacted] contributed to [redacted]) and [redacted] **for** [redacted] (Avg WA [redacted] plus the [redacted] supported from [redacted]). Power factor of [redacted] for [redacted] and [redacted] for [redacted] were used during allocation.
  - Ignore motors.
  - Open zero-point switch and allocate the loads.
  - Close zero-point switch and run analysis.

- Physical midpoint on feeder [redacted] is taken at cable section CYMDIST # 1013327359; and the endpoint is taken at cable inside [redacted].

- Physical midpoint on feeder [redacted] is taken at cable section CYMDIST # 403017779; and the endpoint is taken at cable inside [redacted].

- Physical midpoint on tie line [redacted] is taken at cable section CYMDIST # 403397566; and the endpoint is taken at cable inside [redacted].

PUBLIC

CC and LLL CYME Study Results

Scenario	@ CTA Connection #1 (MVA)	@ CTA Connection #2 (MVA)	@ CTA Connection #3 (MVA)	@ CTA Connection #4 (MVA)	@ ComEd Circuit #1 (MVA))	@ ComEd Circuit #2 (MVA)	@ CTA Connection #1 (kV)	@ CTA Connection #2 (kV)	@ CTA Connection #3 (kV)	@ CTA Connection #4 (kV)	@ ComEd Circuit #1 (kV)	@ ComEd Circuit #2 (kV)	@ ComEd - Circuit #1 Midpoint (kV)	@ ComEd - Circuit #2 Midpoint (kV)	@ ComEd - Circuit #3 Midpoint (kV)	@ ComEd - Circuit #1 Endpoint (kV)	@ ComEd - Circuit #2 Endpoint (kV)	@ ComEd - Circuit #3 Endpoint (kV)
1	-5.0	-.3	.3	-1.2	4.7	3.7	12.4	12.4	12.4	12.4	12.5	12.5	12.4	12.4	12.4	12.4	12.4	12.4
2	0	-5.2	5.2	-6.2	0	8.9	0	12.0	12.1	12.1	0	12.5	0	12.2	12.1	0	12.1	12.0
3	0	-5.2	5.2	-6.2	.7	8.9	12.5	12.0	12.1	12.1	12.5	12.5	12.5	12.2	12.1	12.5	12.1	12.0
4	-5.2	0	.2	-1.0	5.0	3.4	12.4	12.4	12.4	12.4	12.5	12.5	12.4	12.4	12.4	12.4	12.4	12.4
5	-6.1	1.0	-1.0	0	6.0	0	12.4	12.4	12.3	0	12.5	0	12.4	0	12.4	12.4	0	12.4
6	-5.1	.2	0	-1.0	4.9	3.5	12.4	12.4	12.4	12.4	12.5	12.5	12.4	12.4	12.4	12.4	12.4	12.4
7	-6.1	1.0	-1.0	0	6.0	2.5	12.4	12.4	12.3	12.4	12.5	12.5	12.4	12.4	12.4	12.4	12.4	12.4
8	.7	-5.0	5.0	-5.9	0	8.6	12.1	12.1	12.2	12.2	12.1	12.5	12.1	12.2	12.1	12.1	12.2	12.1
9	-8.6	3.4	-3.4	2.5	8.6	0	12.3	12.3	12.2	12.2	12.5	12.2	12.3	12.2	12.3	12.3	12.2	12.3
10	-5.2	0	0	-1.0	5.0	3.5	12.4	0	12.4	12.4	12.5	12.5	12.4	12.4	0	12.4	12.4	0
11																		

Scenario:

Scenario 1: @ CTA connection #1, #2, #3, and #4 closed, @ ComEd circuit #1 and #2 closed. This represents the normal condition.

Scenario 2: @ CTA connection #1 open and #2, #3 and #4 closed, @ ComEd circuit #1 open and #2 closed. This represents an outage of ComEd circuit #1.

Scenario 3: @ CTA connection #1 and bus tie open and #2, #3, and #4 closed, @ ComEd circuit #1, and #2 closed. This represents an outage of CTA Bus #1.

PUBLIC

Scenario 4: @ CTA connection #2 and bus tie open and #1, #3, and #4, closed, @ ComEd circuit #1, and #2 closed. This represents an outage of CTA Bus #2.

Scenario 5: @ CTA connection #4 open and #1, #2, and #3 closed, @ ComEd circuit #2 open and #1 closed. This represents an outage of ComEd circuit #2.

Scenario 6: @ CTA connection #3 and bus tie open and #1, #2, and #4 closed, @ ComEd circuit #1 and #2 closed. This represents an outage of CTA Bus #3.

Scenario 7: @ CTA connection #4 and bus tie open and #1, #2, and #3, closed, @ ComEd circuit #1 and #2 closed. This represents an outage of CTA Bus #4.

Scenario 8: @ CTA connection #1, #2, #3, and #4, closed, @ ComEd circuit #1 open and #2 closed. This represents loss of source for ComEd circuit #1.

Scenario 9: @ CTA connection #1, #2, #3, and #4 closed, @ ComEd circuit #2 open and #1 closed. This represents loss of source for ComEd circuit #2.

Scenario 10: @ CTA connection #2 and #3 open and #1 and #4 closed, @ ComEd circuit #1 and #2 closed. This represents loss of tie line between CC and LLL.

CONFIDENTIAL AND PROPRIETARY - CEII

CC AND LLL SUBSTATIONS

CCC CYME Study Results

Scenario	@ CTA / Metra -Connection #1 (MVA)	@ CTA / Metra - Connection #2 (MVA)	@ ComEd - Circuit #1 (MVA)	@ ComEd - Circuit #2 (MVA)	@ CTA / Metra - Connection #1 (kV)	@ CTA / Metra - Connection #2 (kV)	@ ComEd - Circuit #1 (kV)	@ ComEd - Circuit #2 (kV)
1	-0.7	-0.7	6.0	6.5	12.8	12.8	13.0	13.0
2	0.0	-1.4	0.0	7.2	0.0	12.7	0.0	13.0
3	0.0	-1.4	5.2	7.2	12.7	12.7	13.0	13.0
4	-1.4	0.0	6.6	0.0	12.7	0.0	13.0	0.0
5	-1.4	0.0	6.6	5.8	12.7	12.7	13.0	13.0
6	5.2	-6.6	0.0	12.8	12.4	12.4	12.2	13.0
7	-7.2	5.8	12.9	0.0	12.4	12.4	13.0	12.2
8								

CCC Cyme Results Comparison

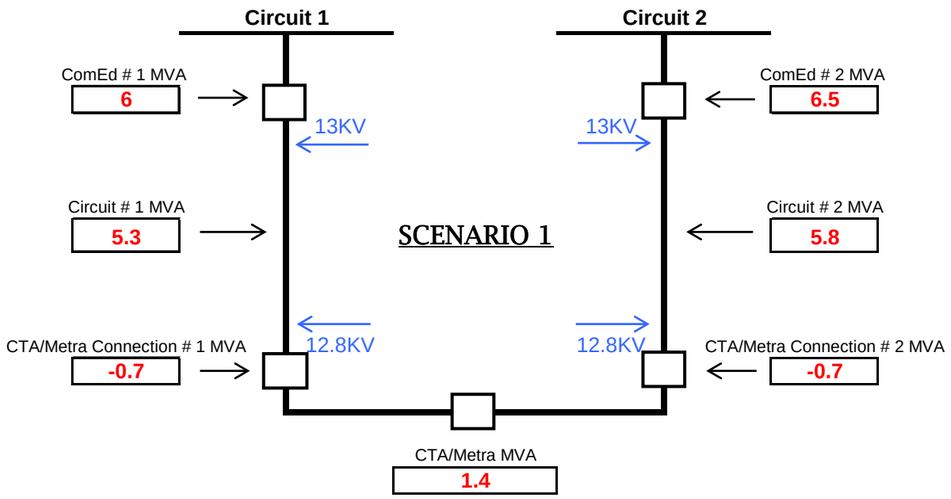

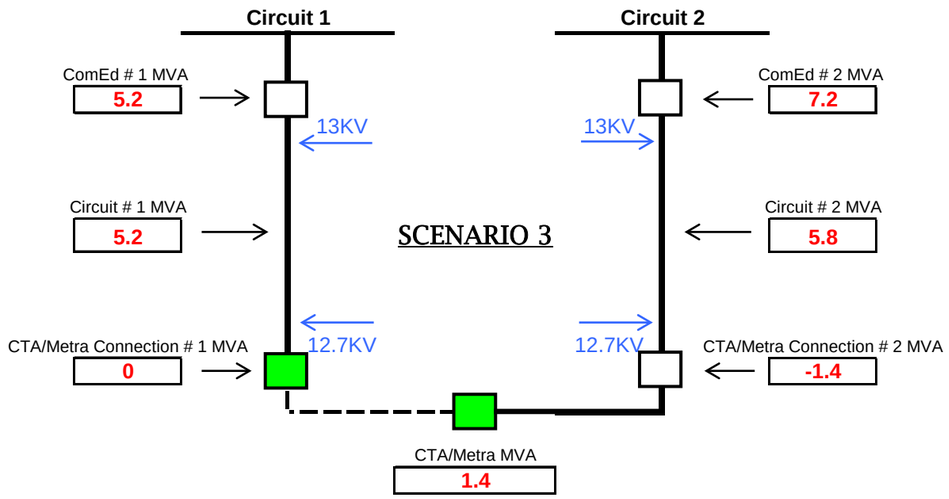

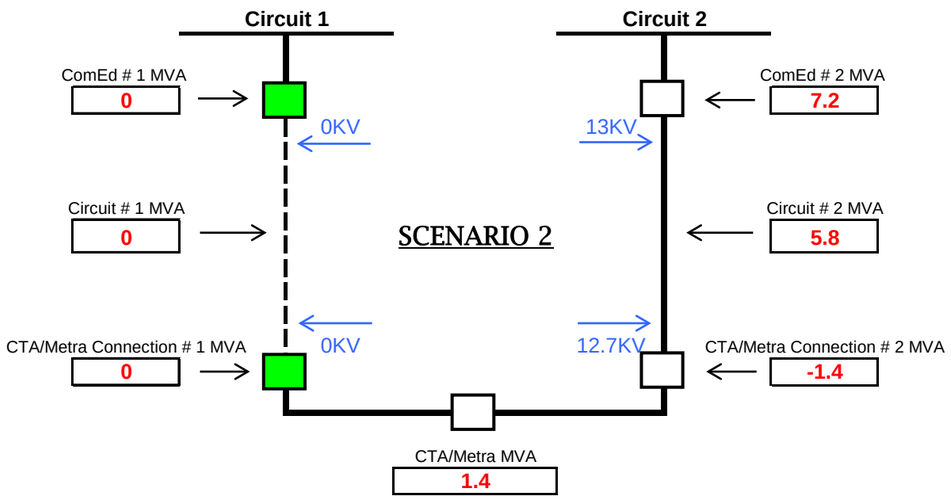

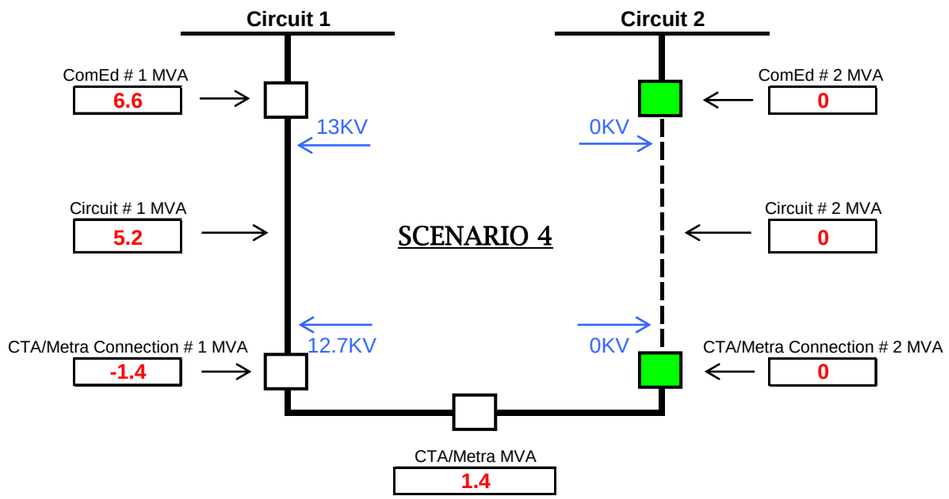

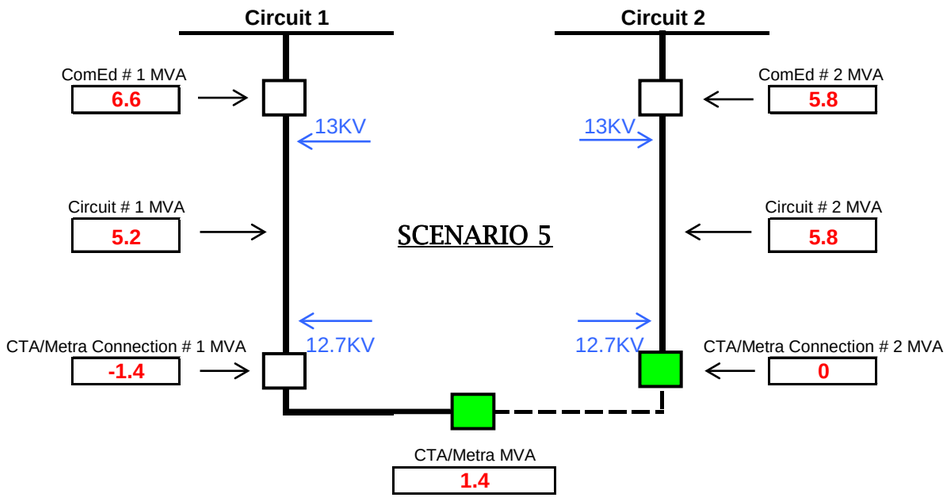
Circuit 1
Circuit 2
ComEd # 1 MVA
6.6
13KV
13KV
ComEd # 2 MVA
5.8
Circuit # 1 MVA
5.2
SCENARIO 5
Circuit # 2 MVA
5.8
CTA/Metra Connection # 1 MVA
-1.4
12.7KV
12.7KV
CTA/Metra Connection # 2 MVA
0
CTA/Metra MVA
1.4

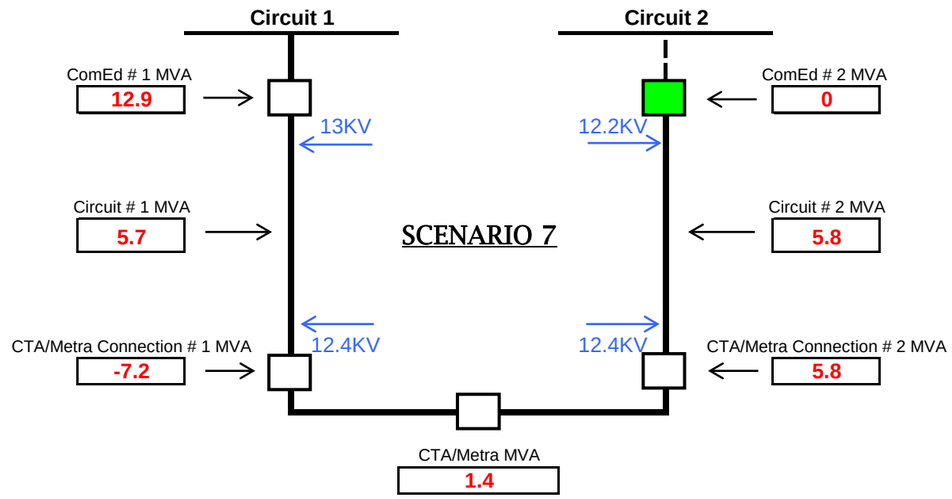
Circuit 1
Circuit 2
ComEd # 1 MVA
12.9
13KV
12.2KV
ComEd # 2 MVA
0
Circuit # 1 MVA
5.7
SCENARIO 7
Circuit # 2 MVA
5.8
CTA/Metra Connection # 1 MVA
-7.2
12.4KV
12.4KV
CTA/Metra Connection # 2 MVA
5.8
CTA/Metra MVA
1.4

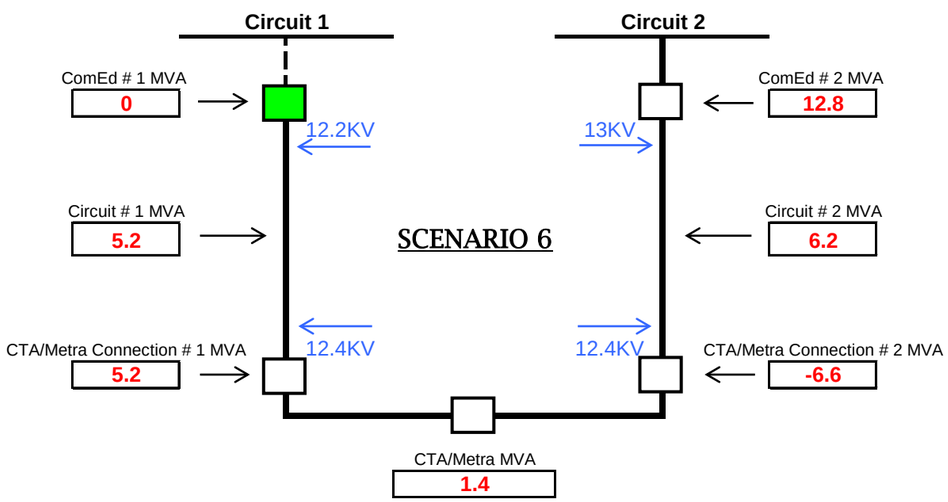
Circuit 1
Circuit 2
ComEd # 1 MVA
0
12.2KV
13KV
ComEd # 2 MVA
12.8
Circuit # 1 MVA
5.2
SCENARIO 6
Circuit # 2 MVA
6.2
CTA/Metra Connection # 1 MVA
5.2
12.4KV
12.4KV
CTA/Metra Connection # 2 MVA
-6.6
CTA/Metra MVA
1.4

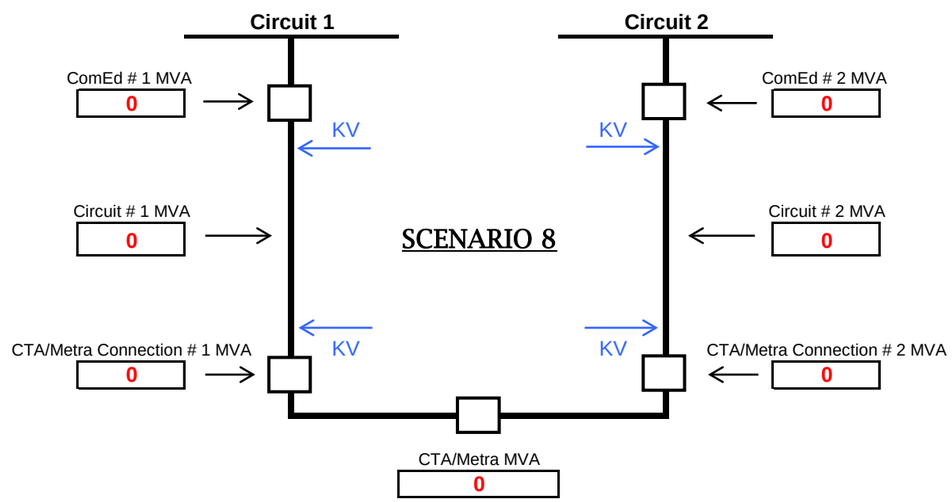
Circuit 1
Circuit 2
ComEd # 1 MVA
0
KV
KV
ComEd # 2 MVA
0
Circuit # 1 MVA
0
SCENARIO 8
Circuit # 2 MVA
0
CTA/Metra Connection # 1 MVA
0
KV
KV
CTA/Metra Connection # 2 MVA
0
CTA/Metra MVA
0

CCC CYME Study Information

- [redacted] substation load was obtained from Cedar Loads. Peak load for each feeding line is [redacted] with assumed PF=[redacted].

- [redacted] APT load information used.
  - [redacted] APT projected load for [redacted] is [redacted] (projection is based on [redacted] actual WA feeder peak load of [redacted] and estimated [redacted] load transfer from the feeder per PD # [redacted]).
  - [redacted] APT WA on selected load date: [redacted]

- [redacted] APT load information used.
  - [redacted] APT projected load for [redacted] is [redacted] (projection is based on [redacted] actual WA feeder peak load of [redacted] and estimated [redacted] load transfer from the feeder per PD # [redacted]
  - [redacted] APT WA on selected load date: [redacted]

- [redacted] load allocation method
  - Open [redacted] line breaker at [redacted] substation.
  - Allocate [redacted] ([redacted] minus [redacted]) on [redacted].
  - Allocate [redacted] ([redacted] plus [redacted]) for [redacted].
  - [redacted] is the [redacted] of flow from [redacted] with [redacted] WA at the zero point prior to radial load allocation.
  - Ignore motors.
  - The [redacted] PF applied to [redacted] (metered) and [redacted] applied to [redacted] (metered).
  - Close tie-breaker at [redacted] substation and run analysis.

- [redacted] midpoint KV taken at overhead section 166957536-1 and endpoint KV taken at overhead section 165516843-2.

- [redacted] midpoint KV taken at overhead section 43265702 and endpoint KV taken at overhead section 189140743.

CCC CYME Study Results

Scenario	@ CTA -Connection #1 (MVA)	@ CTA - Connection #2 (MVA)	@ ComEd - Circuit #1 (MVA)	@ ComEd - Circuit #2 (MVA)	@ CTA -Connection #1 (kV)	@ CTA - Connection #2 (kV)	@ ComEd - Circuit #1 (kV)	@ ComEd - Circuit #2 (kV)	@ ComEd - Circuit #1 Midpoint (kV)	@ ComEd - Circuit #2 Midpoint (kV)	@ ComEd - Circuit #1 Endpoint (kV)	@ ComEd - Circuit #2 Endpoint (kV)
1	-0.7	-0.7	6.0	6.5	12.8	12.8	13.0	13.0	12.8	12.9	12.7	12.8
2	0	-1.4	0	7.2	0	12.7	0	13.0	0	12.9	0	12.7
3	0	-1.4	5.2	7.2	12.7	12.7	13.0	13.0	12.9	12.9	12.8	12.7
4	-1.4	0	6.6	0	12.7	0	13.0	0	12.8	0	12.7	0
5	-1.4	0	6.6	5.8	12.7	12.7	13.0	13.0	12.8	12.9	12.7	12.7
6	5.2	-6.6	0	12.8	12.4	12.4	12.2	13.0	12.2	12.8	12.2	12.4
7	-7.2	5.8	12.9	0	12.4	12.4	13.0	12.2	12.6	12.2	12.5	12.4

Scenario:

Scenario 1: @ CTA/Metra connection #1 and #2 closed, @ ComEd circuit #1 and #2 closed. This represents the normal condition.

Scenario 2: @ CTA/Metra connection #1 open and #2 closed, @ ComEd circuit #1 open and #2 closed. This represents an outage of ComEd circuit #1.

Scenario 3: @ CTA/Metra connection #1 and bus tie open and #2 closed, @ ComEd circuit #1 and #2 closed. This represents an outage of CTA/Metra Bus #1.

Scenario 4: @ CTA/Metra connection #1 closed and #2 open, @ ComEd circuit #1 closed and #2 open. This represents an outage of ComEd circuit #2.

Scenario 5: @ CTA/Metra connection #1 closed and #2 and bus tie open, @ ComEd circuit #1 and #2 closed. This represents an outage of CTA/Metra Bus #2.

Scenario 6: @ CTA/Metra connection #1 and #2 closed, @ ComEd circuit #1 open and #2 closed. This represents loss of source for ComEd circuit #1.

Scenario 7: @ CTA/Metra connection #1 and #2 closed, @ ComEd circuit #1 closed and #2 open. This represents loss of source for ComEd circuit #2.

CONFIDENTIAL AND PROPRIETARY - CEII

CCC SUBSTATION

D CTA CYME Study Results

Scenario	@ CTA / Metra Connection #1 (MVA)	@ CTA / Metra - Connection #2 (MVA)	@ ComEd - Circuit #1 (MVA)	@ ComEd - Circuit #2 (MVA)	@ ComEd - Circuit #3 (MVA)	@ ComEd - Circuit #4 (MVA)	@ CTA / Metra - Connection #1 (kV)	@ CTA / Metra - Connection #2 (kV)	@ ComEd - Circuit #1 (kV)	@ ComEd - Circuit #2 (kV)	@ ComEd - Circuit #3 (kV)	@ ComEd - Circuit #4 (kV)
1	0.1	-0.8	6.7	7.1	4.7	5.0	12.2	12.2	12.5	12.5	12.5	12.5
2	0.0	-0.7	0.0	7.2	4.3	7.2	0.0	12.2	0.0	12.5	12.5	12.5
3	0.0	-0.7	6.7	7.2	4.7	5.0	12.2	12.2	12.5	12.5	12.5	12.5
4	-0.7	0.0	7.1	0.0	4.9	5.2	12.2	0.0	12.5	0.0	12.5	12.5
5	-0.7	0.0	7.1	6.4	4.9	5.2	12.2	12.2	12.5	12.5	12.5	12.5
6	2.8	-3.5	0.0	10.2	6.7	7.1	12.0	12.0	12.0	12.5	12.5	12.5
7	-7.0	6.3	10.5	0.0	6.6	7.0	12.0	12.0	11.9	12.5	12.5	12.5
8	1.1	-1.8	8.4	8.4	0.0	7.0	12.1	12.1	12.5	12.5	0.0	12.5
9	1.1	-1.8	8.4	8.4	6.6	0.0	12.1	12.1	12.5	12.5	12.5	0.0
10	1.2	-1.9	8.6	8.5	6.8	0.0	12.1	12.1	12.5	12.5	12.5	12.1

KV

D CTA Cyme Results Comparison

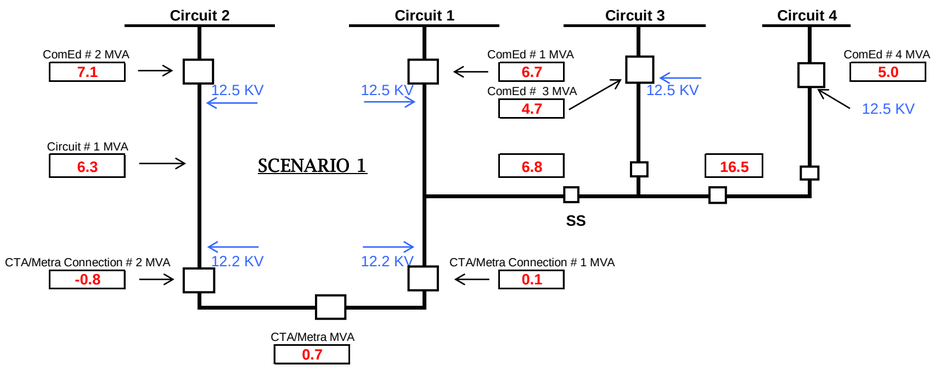

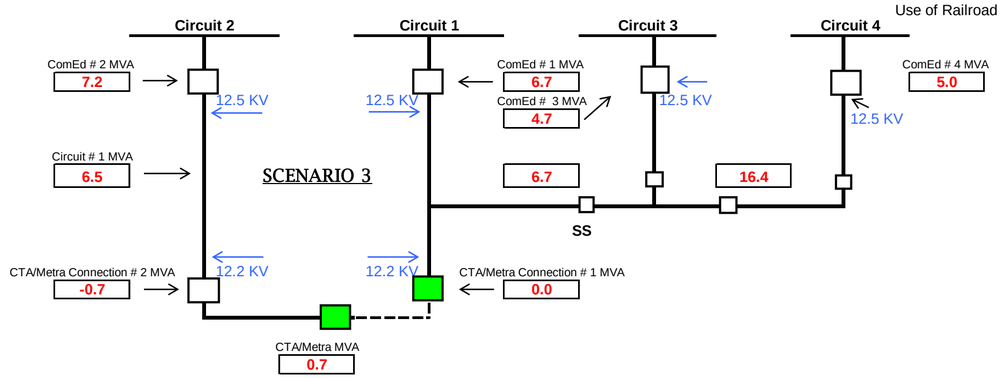

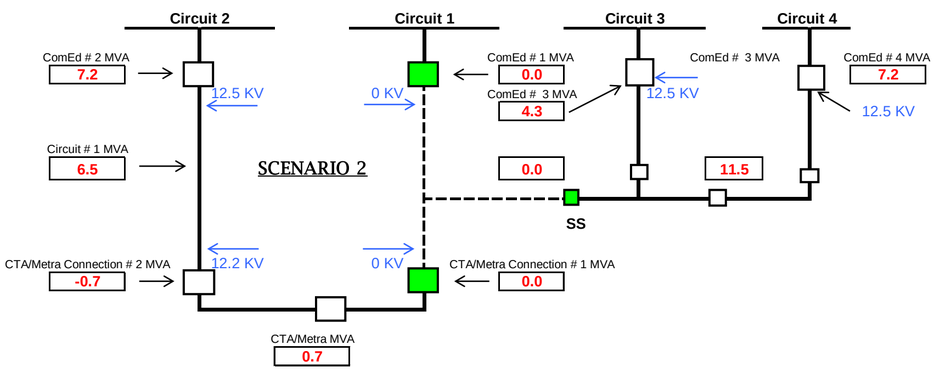

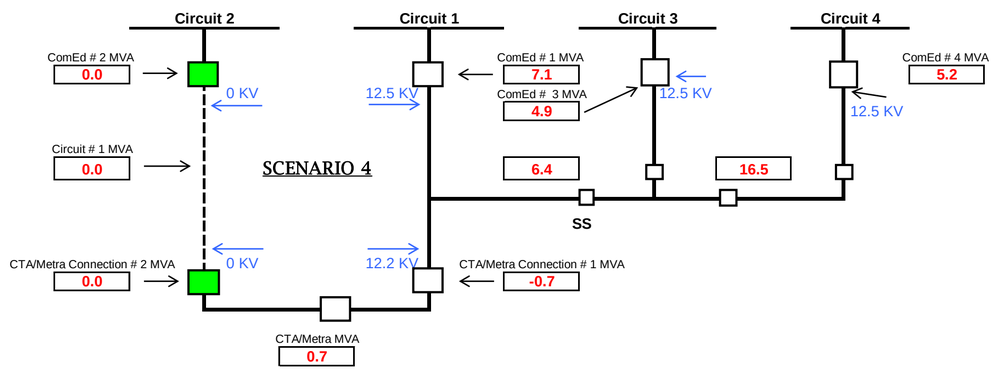

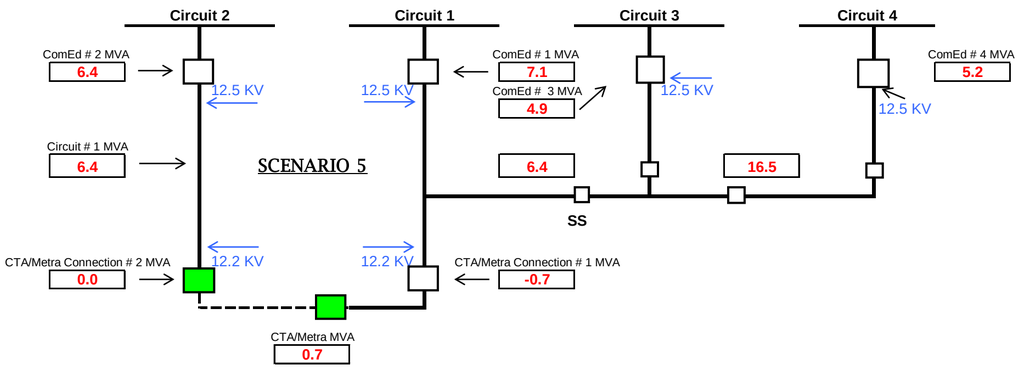
Circuit 2
Circuit 1
Circuit 3
Circuit 4
ComEd # 2 MVA
6.4
12.5 KV
Circuit # 1 MVA
6.4
SCENARIO 5
CTA/Metra Connection # 2 MVA
0.0
12.2 KV
CTA/Metra MVA
0.7
12.5 KV
ComEd # 1 MVA
7.1
ComEd # 3 MVA
4.9
6.4
12.2 KV
CTA/Metra Connection # 1 MVA
-0.7
12.5 KV
16.5
SS
ComEd # 4 MVA
5.2
12.5 KV

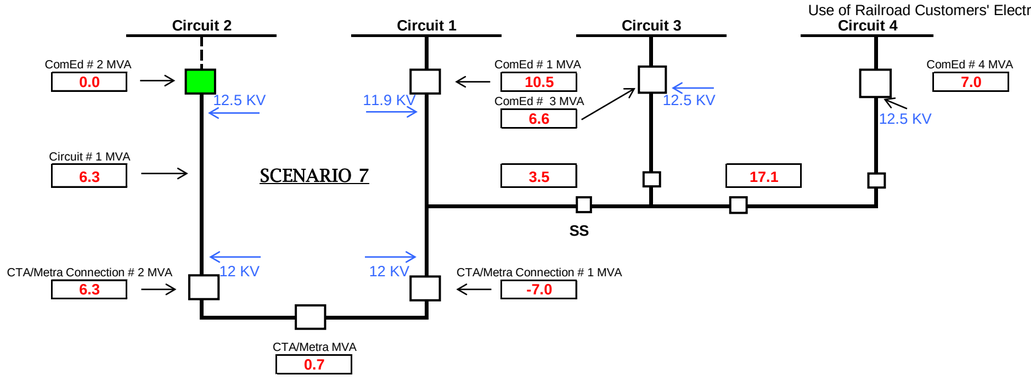
Circuit 2
Circuit 1
Circuit 3
Circuit 4
ComEd # 2 MVA
0.0
12.5 KV
Circuit # 1 MVA
6.3
SCENARIO 7
CTA/Metra Connection # 2 MVA
6.3
12 KV
CTA/Metra MVA
0.7
11.9 KV
ComEd # 1 MVA
10.5
ComEd # 3 MVA
6.6
3.5
12 KV
CTA/Metra Connection # 1 MVA
-7.0
12.5 KV
17.1
SS
ComEd # 4 MVA
7.0
12.5 KV

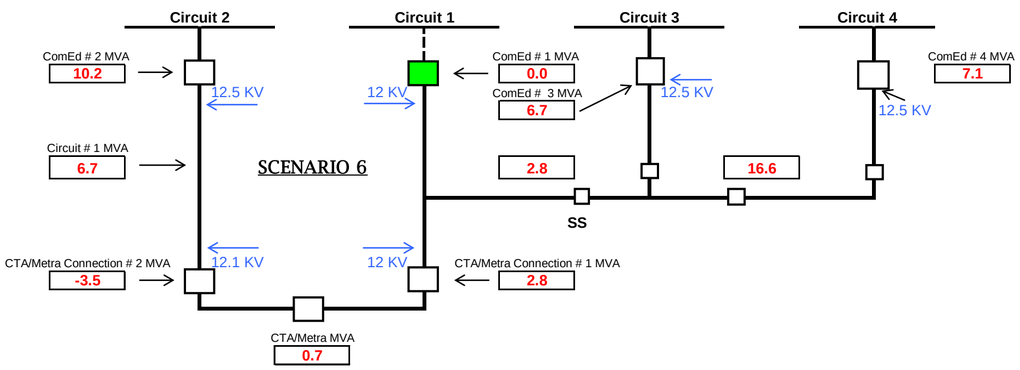
Circuit 2
Circuit 1
Circuit 3
Circuit 4
ComEd # 2 MVA
10.2
12.5 KV
Circuit # 1 MVA
6.7
SCENARIO 6
CTA/Metra Connection # 2 MVA
-3.5
12.1 KV
CTA/Metra MVA
0.7
12 KV
ComEd # 1 MVA
0.0
ComEd # 3 MVA
6.7
2.8
12 KV
CTA/Metra Connection # 1 MVA
2.8
12.5 KV
16.6
SS
ComEd # 4 MVA
7.1
12.5 KV

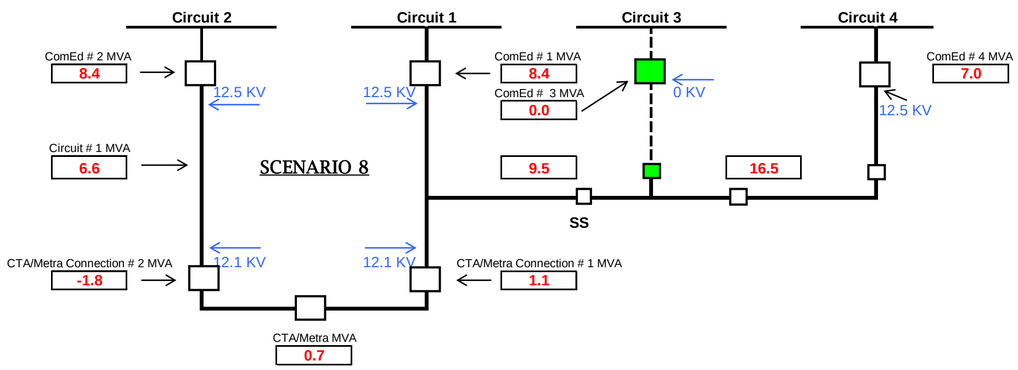
Circuit 2
Circuit 1
Circuit 3
Circuit 4
ComEd # 2 MVA
8.4
12.5 KV
Circuit # 1 MVA
6.6
SCENARIO 8
CTA/Metra Connection # 2 MVA
-1.8
12.1 KV
CTA/Metra MVA
0.7
12.5 KV
ComEd # 1 MVA
8.4
ComEd # 3 MVA
0.0
9.5
12.1 KV
CTA/Metra Connection # 1 MVA
1.1
0 KV
16.5
SS
ComEd # 4 MVA
7.0
12.5 KV

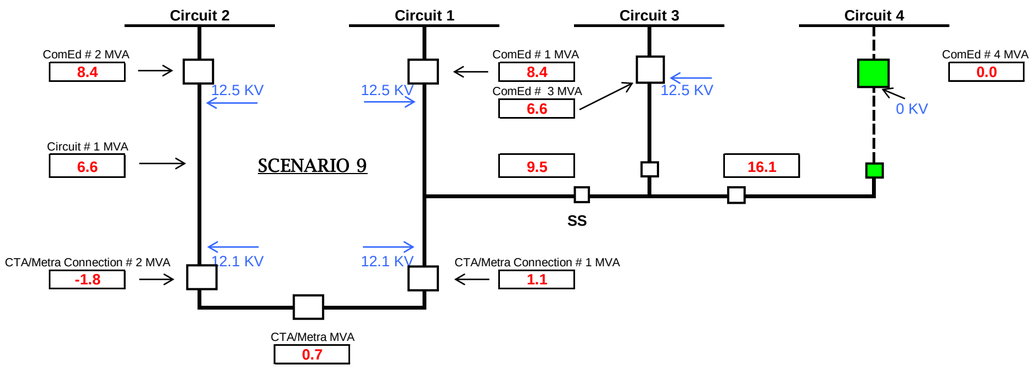
Circuit 2
Circuit 1
Circuit 3
Circuit 4
ComEd # 2 MVA
8.4
12.5 KV
12.5 KV
ComEd # 1 MVA
8.4
ComEd # 3 MVA
6.6
12.5 KV
ComEd # 4 MVA
0.0
0 KV
Circuit # 1 MVA
6.6
SCENARIO 9
9.5
16.1
SS
CTA/Metra Connection # 2 MVA
-1.8
12.1 KV
12.1 KV
CTA/Metra Connection # 1 MVA
1.1
CTA/Metra MVA
0.7

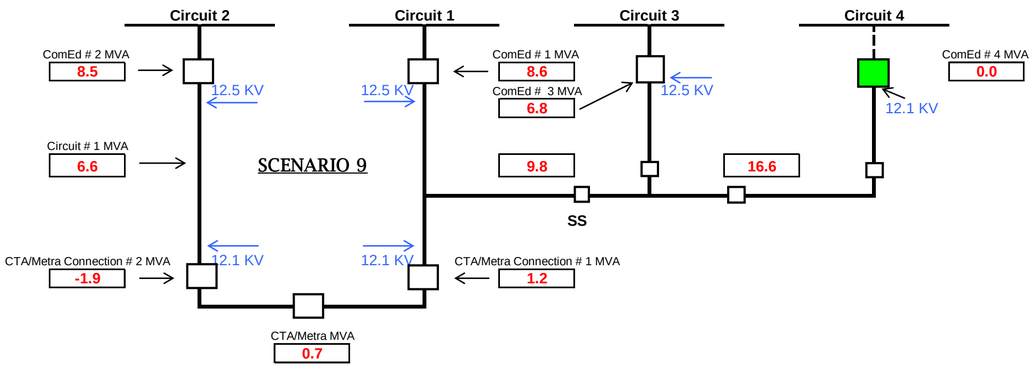
Circuit 2
Circuit 1
Circuit 3
Circuit 4
ComEd # 2 MVA
8.5
12.5 KV
12.5 KV
ComEd # 1 MVA
8.6
ComEd # 3 MVA
6.8
12.5 KV
ComEd # 4 MVA
0.0
12.1 KV
Circuit # 1 MVA
6.6
SCENARIO 9
9.8
16.6
SS
CTA/Metra Connection # 2 MVA
-1.9
12.1 KV
12.1 KV
CTA/Metra Connection # 1 MVA
1.2
CTA/Metra MVA
0.7

D CTA CYME Study Information

- Loads for [redacted] and [redacted] at [redacted], [redacted] were calculated based on [redacted] APT WA Load and APT Nominal Voltage.
  - [redacted], APT WA = [redacted]A, Nominal Voltage = [redacted]kV ➔ [redacted]kVA, assumed [redacted]% PF.
  - [redacted], APT WA = [redacted]A, Nominal Voltage = [redacted]kV ➔ [redacted]kVA, assumed [redacted]% PF.

- [redacted] on [redacted] – [redacted] Calculated [redacted]kVA based on [redacted]kW obtained from comedpowerpath tool for [redacted] bill and assumed [redacted]% PF.

- [redacted] & [redacted] on [redacted] – [redacted] Calculated [redacted]kVA for each TR based on [redacted]kW obtained from comedpowerpath tool for [redacted], [redacted] and assumed [redacted]% PF.

- [redacted] ([redacted]) substation load was obtained from Cedar Loads. Peak load for each feeding line is [redacted] KVA with assumed PF=[redacted].

- [redacted] APT load information used.
  - [redacted] APT selected load date: [redacted]
  - [redacted] APT actual load on [redacted]: [redacted]A/[redacted]A/[redacted]A ➔ [redacted]A
  - [redacted] APT WA on selected load date: [redacted]
  - [redacted] WA load: [redacted]A/[redacted]A/[redacted]A ➔ [redacted]A.

- [redacted] APT load information used.
  - [redacted] APT selected load date: [redacted]
  - [redacted] APT actual load on [redacted]: [redacted]A/[redacted]A/[redacted]A ➔ [redacted]A
  - [redacted] APT WA on selected load date: [redacted]
  - [redacted] WA load: [redacted]A/[redacted]A/[redacted]A ➔ [redacted]A.

- [redacted] ([redacted]) APT load information used.
  - [redacted] APT selected load date: [redacted]
  - [redacted] APT actual load on [redacted]: [redacted]A/[redacted]A/[redacted]A ➔ [redacted]A
  - [redacted] APT WA on selected load date: [redacted]
  - [redacted] WA load: [redacted]A/[redacted]A/[redacted]A ➔ [redacted]A.

- [redacted] APT load information used.
  - [redacted] APT selected load date: [redacted]
  - [redacted] APT actual load on [redacted]: [redacted]A/[redacted]A/[redacted]A ➔ [redacted]A
  - [redacted] APT WA on selected load date: [redacted]
  - [redacted] WA load: [redacted]A/[redacted]A/[redacted]A ➔ [redacted]A.

- [redacted] load allocation method
  - Validate in the CYME model all transformers, ESS loads, including [redacted] KVA for each feeding line at [redacted] per Cedar meter information.
  - Zero points on the network were identified to be at [redacted] and [redacted]. [redacted] and [redacted] are supporting [redacted]A ([redacted]A from each feeder) to [redacted] at [redacted], based on non-allocated cymdist load. [redacted]A represents [redacted]% and [redacted]% of the total cymdist load for feeders [redacted] and [redacted] respectively. Feeders [redacted] and [redacted] are both equaling supporting the load at [redacted]
  - Enter feeder load as follow: [redacted]**A for** [redacted] (Avg. WA [redacted]A minus [redacted]A contributed to [redacted] & [redacted]; [redacted]A represents [redacted]% of [redacted]A).
  - Enter feeder load as follow: [redacted]**A for** [redacted] (Avg. WA [redacted]A minus [redacted]A contributed to [redacted]& [redacted]; [redacted]A represents [redacted]% of [redacted]A).
  - Enter feeder load as follow: [redacted]**A for** [redacted] (Avg. WA [redacted]A plus [redacted]A contributed from [redacted] & [redacted]).
  - Enter feeder load as follow: [redacted]**A for** [redacted] (Avg. WA [redacted]A plus [redacted]A contributed from [redacted] & [redacted]).
  - Power factor of [redacted]% for [redacted] and [redacted] was used during allocation so as to obtain an adjusted load PF of [redacted] – [redacted] % on both feeders; [redacted] feeders have not [redacted]. [redacted] [redacted] [redacted]. [redacted] [redacted] [redacted] [redacted].
  - Power factor of [redacted]% for [redacted] and [redacted] was used during allocation so as to obtain an adjusted load PF of [redacted] – [redacted] % on both feeders; [redacted] – one on each feeder. [redacted] [redacted]. [redacted] [redacted] [redacted] [redacted] [redacted] [redacted].
  - Ignore motors.
  - Open first zero-point switch – bus tie at [redacted] for [redacted] and [redacted].
  - Open second zero-point switch inside [redacted] – bus tie between [redacted] and [redacted] and incoming switch for [redacted].
  - Allocate the loads.
  - Close zero-points switch and run analysis.
- Physical midpoint on feeder [redacted] is taken on cable at [redacted], and the endpoint is taken at the breaker of [redacted] inside [redacted].

- Physical midpoint on feeder [redacted] is taken on cable at [redacted], and the endpoint is taken at the breaker of [redacted] inside [redacted].

- Physical midpoint on feeder [redacted] is taken on cable at the riser pole with [redacted] [redacted], and the endpoint is taken at the end of cable ([redacted]) at [redacted]

- Physical midpoint on feeder [redacted] is taken on cable at [redacted], and the endpoint is taken at the end of overhead transformer location [redacted]

D CTA CYME Study Results

Scenario	@ CTA Connection #1 (MVA)	@ CTA Connection #2 (MVA)	@ ComEd Circuit #1 (MVA)	@ ComEd Circuit #2 (MVA)	@ ComEd Circuit #3 (MVA)	@ ComEd Circuit #4 (MVA)	@ CTA Connection #1 (kV)	@ CTA Connection #2 (kV)	@ ComEd Circuit #1 (kV)	@ ComEd Circuit #2 (kV)	@ ComEd Circuit #3 (kV)	@ ComEd Circuit #4 (kV)	@ ComEd - Circuit #1 Midpoint (kV)	@ ComEd - Circuit #2 Midpoint (kV)	@ ComEd - Circuit #3 Midpoint (kV)	@ ComEd - Circuit #4 Midpoint (kV)	@ ComEd - Circuit #1 Endpoint (kV)	@ ComEd - Circuit #2 Endpoint (kV)	@ ComEd - Circuit #3 Endpoint (kV)	@ ComEd - Circuit #4 Endpoint (kV)
1	+0.1	-0.8	+6.7	+7.1	+4.7	+5.0	12.2	12.2	12.5	12.5	12.5	12.5	12.2	12.2	12.3	12.3	12.0	3.6	12.2	12.2
2	0	-0.7	0	+7.2	+4.3	7.2	0	12.2	0	12.5	12.5	12.5	0	12.2	12.3	12.3	0	3.6	12.2	12.2
3	0	-0.7	+6.7	+7.2	+4.7	+5.0	12.2	12.2	12.5	12.5	12.5	12.5	12.2	12.2	12.3	12.3	12.0	3.6	12.2	12.2
4	-0.7	0	+7.1	0	+4.9	+5.2	0	12.2	12.5	0	12.5	12.5	12.1	0	12.3	12.3	12.0	0	12.2	12.2
5	-0.7	0	+7.1	+6.4	+4.9	+5.2	12.2	12.2	12.5	12.5	12.5	12.5	12.1	12.2	12.3	12.3	12.0	3.6	12.2	12.2
6	+2.8	-3.5	0	+10.2	+6.7	+7.1	12.0	12.0	12.0	12.5	12.5	12.5	12.0	12.0	12.3	12.3	11.7	3.5	12.1	12.1
7	-7.0	+6.3	+10.5	0	+6.6	+7.0	12.0	12.0	11.9	12.5	12.5	12.5	12.0	11.9	12.3	12.3	11.7	3.5	12.1	12.1
8	+1.1	-1.8	+8.4	+8.4	0	+7.0	12.1	12.1	12.5	12.5	0	12.5	12.1	12.1	0	12.3	11.9	3.6	0	12.2
9	+1.1	-1.8	+8.4	+8.4	+6.6	0	12.1	12.1	12.5	12.5	12.5	0	12.1	12.1	12.3	0	11.9	3.6	12.1	0
10	+1.2	-1.9	+8.6	+8.5	+6.8	0	12.1	12.1	12.5	12.5	12.5	12.1	12.1	12.1	12.3	12.1	11.9	3.5	12.1	12.1

Scenarios:

Scenario 1: @ CTA/METRA connection #1, #2 closed, @ ComEd circuits #1, #2, #3, and#4 closed, and @ [redacted] all connections closed. This represents the normal condition.

Scenario 2: @ CTA/METRA connection #1 open; @ ComEd circuit #1 open; @ [redacted] connection #1 open. This represents an outage of ComEd circuit #1 (Y2566).

Scenario 3: @ CTA/METRA connection #1 and bus tie open; @ ComEd circuits #1, #2, #3 and #4 closed; @ [redacted] all connections closed. This represents an outage of CTA Bus #1 ([redacted] in feed side).

Scenario 4: @ CTA/METRA connection #2 open; @ ComEd circuits #2 open, #1, #3, and #4 closed; @ [redacted] all connections closed. This represents an outage of ComEd circuit #2 ([redacted]).

Scenario 5: @ CTA/Metra connection #2 and bus tie open; @ ComEd circuits #1, #2, #3, and #4 closed; @ [redacted] all connections closed. This represents an outage of CTA/Metra Bus #2 ([redacted] in feed side).

Scenario 6: @ CTA/Metra connection #1, and #2 closed; @ ComEd circuits #1 open, #2, #3, and #4 closed; @ [redacted] all connections closed. This represents loss of source for ComEd circuit #1 ([redacted]).

Scenario 7: @ CTA/Metra connection #1, and #2 closed; @ ComEd circuits #2 open, #1, #3, and #4 closed; @ [redacted] all connections closed. This represents loss of source for ComEd circuit #2 ([redacted]).

Scenario 8: @ CTA/METRA connections #1 and #2 closed; @ ComEd circuits #3 open, #1, #2, and #4 closed; @ [redacted] connections #2 open, #1 and #4 closed. This represents an outage of ComEd circuit #3 ([redacted]).

Scenario 9: @ CTA/METRA connections #1 and #2 closed; @ ComEd circuits #4 open, #1, #2, and #3 closed; @ [redacted] connections #3 open, #1 and #2 closed. This represents an outage of ComEd circuit #4 ([redacted]).

Scenario 10: @ CTA/METRA connections #1 and #2 closed; @ ComEd circuits #4 open, #1, #2, and #3 closed; @ [redacted] all connections closed. This represents loss of source for ComEd circuit #4 ([redacted]).

CONFIDENTIAL AND PROPRIETARY - CEII

D SUBSTATION

DD CYME Study Results

Scenario	@ CTA / Metra -Connection #1 (MVA)	@ CTA / Metra - Connection #2 (MVA)	@ ComEd - Circuit #1 (MVA)	@ ComEd - Circuit #2 (MVA)	@ CTA / Metra - Connection #1 (kV)	@ CTA / Metra - Connection #2 (kV)	@ ComEd - Circuit #1 (kV)	@ ComEd - Circuit #2 (kV)
1	-3.3	1.9	5.0	5.4	12.3	12.3	12.5	12.5
2	0	-1.4	0	8.8	0	12.2	0	12.5
3	0	-1.4	1.7	8.8	12.4	12.2	12.5	12.5
4	-1.4	0	3.1	0	12.4	0	12.5	0
5	-1.4	0	3.1	7.3	12.4	12.2	12.5	12.5
6	1.7	-3.0	0	10.5	12.1	12.1	12.1	12.5
7	-8.6	7.2	10.6	0	12.1	12.1	12.5	12.1
8								

DD CYME Results Comparison

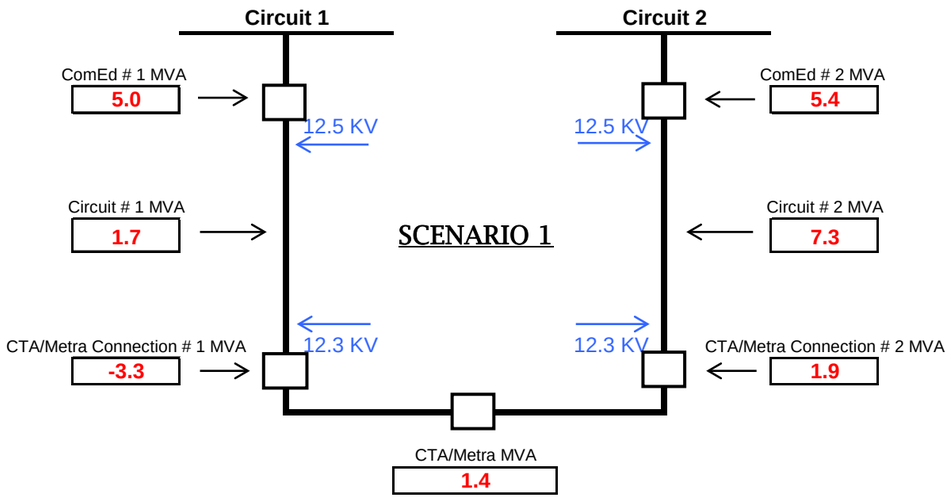

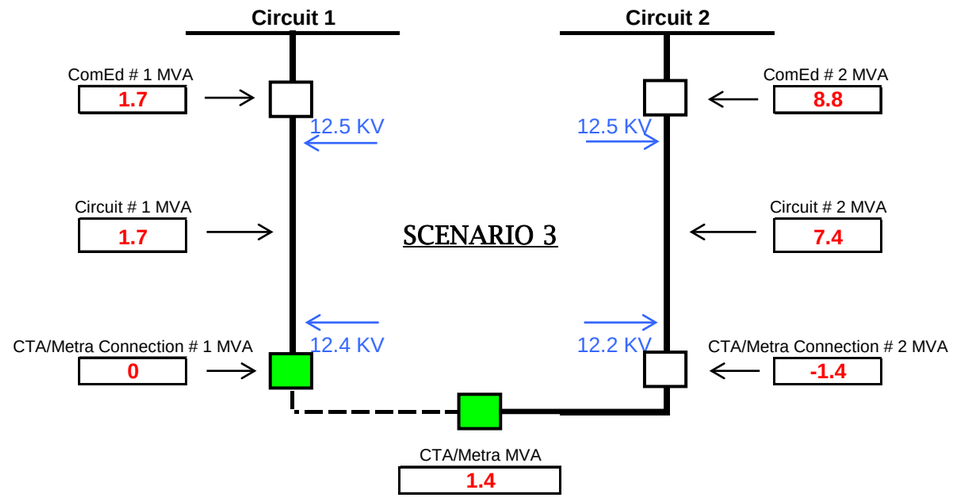

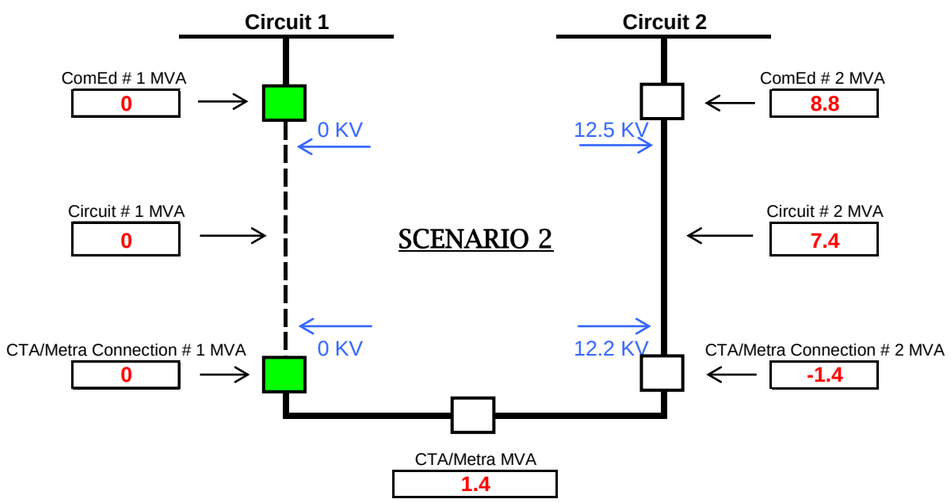

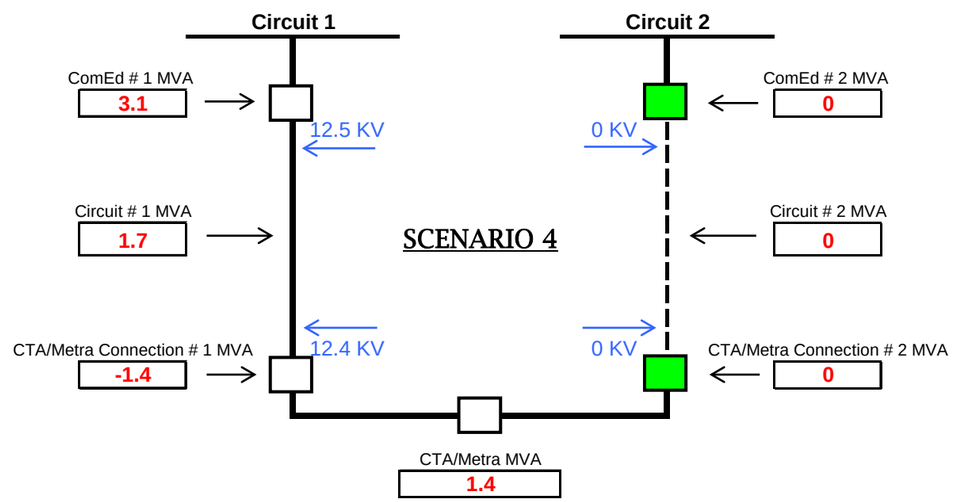

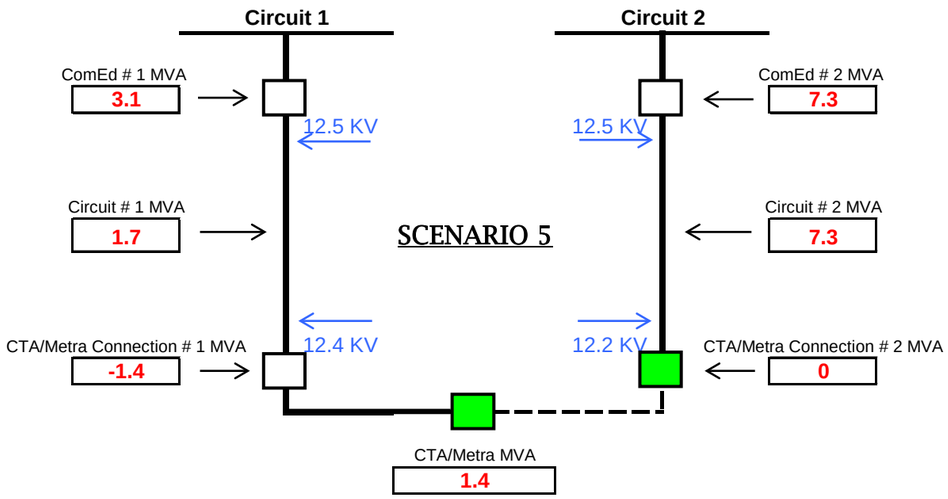
Circuit 1
Circuit 2
ComEd # 1 MVA
3.1
ComEd # 2 MVA
7.3
12.5 KV
12.5 KV
Circuit # 1 MVA
1.7
SCENARIO 5
Circuit # 2 MVA
7.3
CTA/Metra Connection # 1 MVA
-1.4
12.4 KV
12.2 KV
CTA/Metra Connection # 2 MVA
0
CTA/Metra MVA
1.4

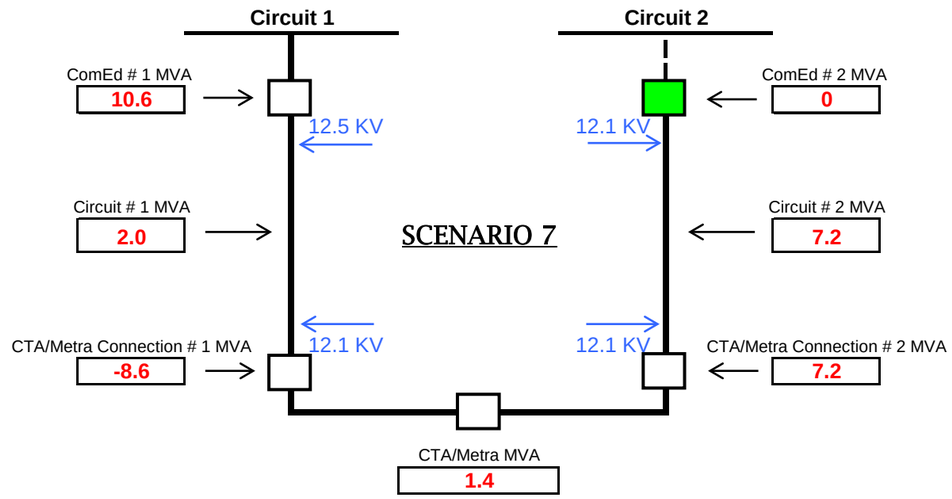
Circuit 1
Circuit 2
ComEd # 1 MVA
10.6
ComEd # 2 MVA
0
12.5 KV
12.1 KV
Circuit # 1 MVA
2.0
SCENARIO 7
Circuit # 2 MVA
7.2
CTA/Metra Connection # 1 MVA
-8.6
12.1 KV
12.1 KV
CTA/Metra Connection # 2 MVA
7.2
CTA/Metra MVA
1.4

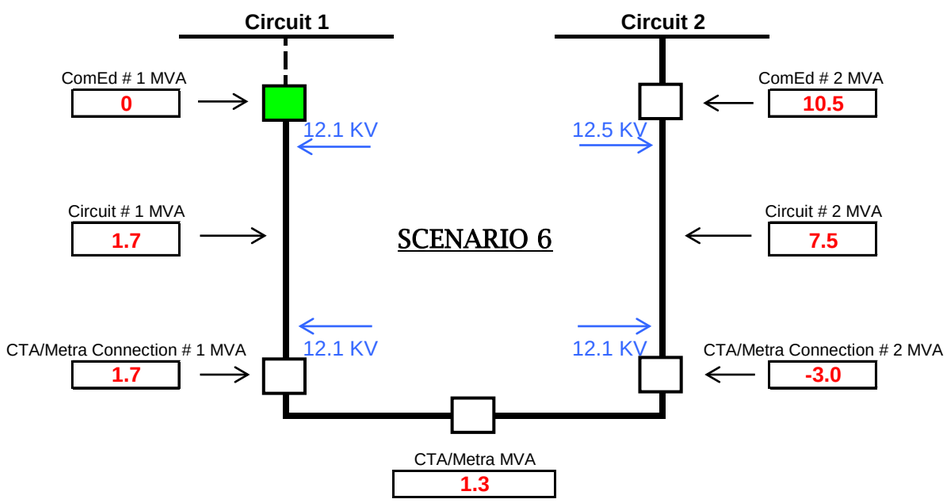
Circuit 1
Circuit 2
ComEd # 1 MVA
0
ComEd # 2 MVA
10.5
12.1 KV
12.5 KV
Circuit # 1 MVA
1.7
SCENARIO 6
Circuit # 2 MVA
7.5
CTA/Metra Connection # 1 MVA
1.7
12.1 KV
12.1 KV
CTA/Metra Connection # 2 MVA
-3.0
CTA/Metra MVA
1.3

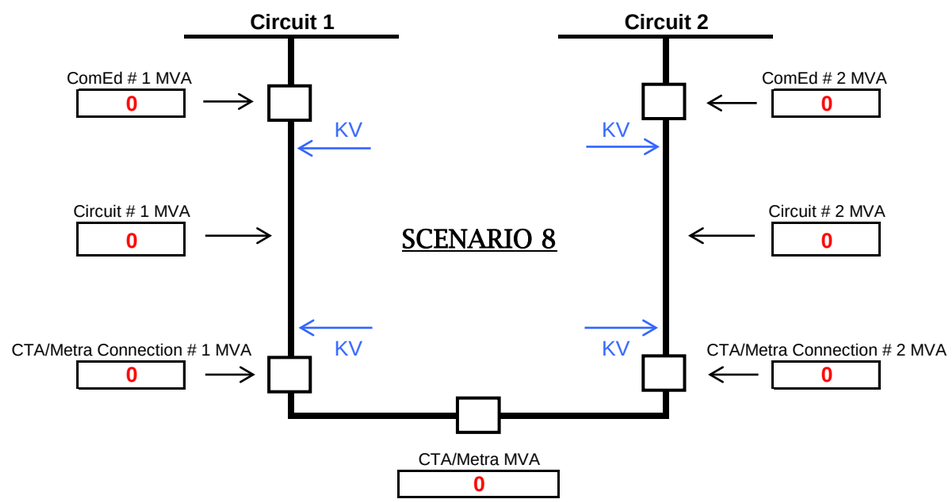
Circuit 1
Circuit 2
ComEd # 1 MVA
0
ComEd # 2 MVA
0
KV
KV
Circuit # 1 MVA
0
SCENARIO 8
Circuit # 2 MVA
0
CTA/Metra Connection # 1 MVA
0
KV
KV
CTA/Metra Connection # 2 MVA
0
CTA/Metra MVA
0

DD CYME Study Information

- [redacted] substation load obtained from CEDAR for [redacted] ([redacted]KW with [redacted] pf for each line).

- [redacted]ohm inductors added to both lines.

- [redacted] APT load information used.
  - [redacted] APT selected load date: [redacted].
  - [redacted] APT actual load on [redacted]: [redacted]A
  - [redacted] APT WA on selected load date: [redacted]
  - [redacted] WA load: [redacted]A

- [redacted] APT load information used.
  - [redacted] APT selected load date: [redacted].
  - [redacted] APT actual load on [redacted]: [redacted]A
  - [redacted] APT WA on selected load date: [redacted]
  - [redacted] WA load: [redacted]A

- [redacted] load allocation method
  - Open [redacted] breaker at [redacted] substation.
  - Allocate [redacted]A ([redacted]A plus [redacted]A) on [redacted].
  - Allocate [redacted]A ([redacted]A minus [redacted]A) on [redacted].
  - [redacted]A is the [redacted]A of flow from [redacted] with [redacted] WA at the zero point prior to radial load allocation.
  - Ignore motors.
  - Close [redacted] breaker at [redacted] substation and run analysis.

- [redacted] midpoint KV taken at cable section 488294551 and endpoint KV taken at overhead section 488060309.

- [redacted] midpoint KV taken at cable section 488295048 and endpoint KV taken at overhead section 488060182.

DD CYME Study Results

Scenario	@ CTA -Connection #1 (MVA)	@ CTA - Connection #2 (MVA)	@ ComEd - Circuit #1 (MVA)	@ ComEd - Circuit #2 (MVA)	@ CTA -Connection #1 (kV)	@ CTA - Connection #2 (kV)	@ ComEd - Circuit #1 (kV)	@ ComEd - Circuit #2 (kV)	@ ComEd - Circuit #1 Midpoint (kV)	@ ComEd - Circuit #2 Midpoint (kV)	@ ComEd - Circuit #1 Endpoint (kV)	@ ComEd - Circuit #2 Endpoint (kV)
1	-3.3	+1.9	+5.0	+5.4	12.3	12.3	12.5	12.5	12.4	12.3	12.3	12.3
2	0	-1.4	0	+8.8	0	12.2	0	12.5	0	12.3	0	12.1
3	0	-1.4	+1.7	+8.8	12.4	12.2	12.5	12.5	12.5	12.3	12.4	12.1
4	-1.4	0	+3.1	0	12.4	0	12.5	0	12.4	0	12.4	0
5	-1.4	0	+3.1	+7.3	12.4	12.2	12.5	12.5	12.4	12.3	12.4	12.2
6	+1.7	-3.0	0	+10.5	12.1	12.1	12.1	12.5	12.1	12.2	12.1	12.1
7	-8.6	+7.2	+10.6	0	12.1	12.1	12.5	12.1	12.2	12.1	12.1	12.0

Scenario:

Scenario 1: @ CTA connection #1 and #2 closed, @ ComEd circuit #1 and #2 closed. This represents the normal condition.

Scenario 2: @ CTA connection #1 open and #2 closed, @ ComEd circuit #1 open and #2 closed. This represents an outage of ComEd circuit #1.

Scenario 3: @ CTA connection #1 and bus tie open and #2 closed, @ ComEd circuit #1 and #2 closed. This represents an outage of CTA Bus #1.

Scenario 4: @ CTA connection #1 closed and #2 open, @ ComEd circuit #1 closed and #2 open. This represents an outage of ComEd circuit #2.

Scenario 5: @ CTA connection #1 closed and #2 and bus tie open, @ ComEd circuit #1 and #2 closed. This represents an outage of CTA Bus #2.

Scenario 6: @ CTA connection #1 and #2 closed, @ ComEd circuit #1 open and #2 closed. This represents loss of source for ComEd circuit #1.

Scenario 7: @ CTA connection #1 and #2 closed, @ ComEd circuit #1 closed and #2 open. This represents loss of source for ComEd circuit #2.

CONFIDENTIAL AND PROPRIETARY - CEII

DD SUBSTATION

DDD and BB CYME Study Results

Scenario	@ CTA Connection #1 (MVA)	@ CTA Connection #2 (MVA)	@ CTA Connection #3 (MVA)	@ CTA Connection #4 (MVA)	@ ComEd Circuit #1 (MVA))	@ ComEd Circuit #2 (MVA)	@ ComEd Circuit #3 (MVA)	@ CTA Connection #1 (kV)	@ CTA Connection #2 (kV)	@ CTA Connection #3 (kV)	@ CTA Connection #4 (kV)	@ ComEd Circuit #1 (kV)	@ ComEd Circuit #2 (kV)	@ ComEd Circuit #3 (kV)
1	-3.8	-1.8	-0.2	-3.1	5.1	5.7	5.5	12.3	12.3	12.4	12.4	12.5	12.5	12.5
2	0.0	-5.6	1.6	-5.0	0.0	7.9	7.3	12.2	12.2	12.4	12.4	0.0	12.5	12.5
3	0.0	-5.6	1.6	-5.0	1.2	7.9	7.3	12.2	12.2	12.4	12.4	12.5	12.5	12.5
4	-5.6	0.0	-1.0	-2.3	6.9	4.8	4.6	12.3	12.3	12.4	12.4	12.5	12.5	12.5
5	-5.6	0.0	0.0	-3.3	6.9	0.0	5.7	12.3	12.3	12.4	12.4	12.5	0.0	12.5
6	-3.8	-1.8	0.0	-3.3	5.0	5.6	5.7	12.3	12.3	12.4	12.4	12.5	12.5	12.5
7	-4.9	-0.8	-3.3	0.0	6.1	7.9	2.3	12.3	12.3	12.3	12.3	12.5	12.5	12.5
8	-4.9	-0.8	-3.3	0.0	6.1	7.9	0.0	12.3	12.3	12.3	12.3	12.5	12.5	0.0
9	1.2	-6.7	2.2	-5.5	0.0	8.5	7.9	12.2	12.2	12.4	12.4	12.2	12.5	12.5
10	-5.9	0.5	3.4	-6.8	7.2	0.0	9.2	12.3	12.3	12.3	12.3	12.5	12.3	12.5
11	-5.6	0.5	-5.6	2.3	6.9	9.5	0.0	12.3	12.3	12.3	12.3	12.5	12.5	12.3

DDD and BB CYME Results Comparison

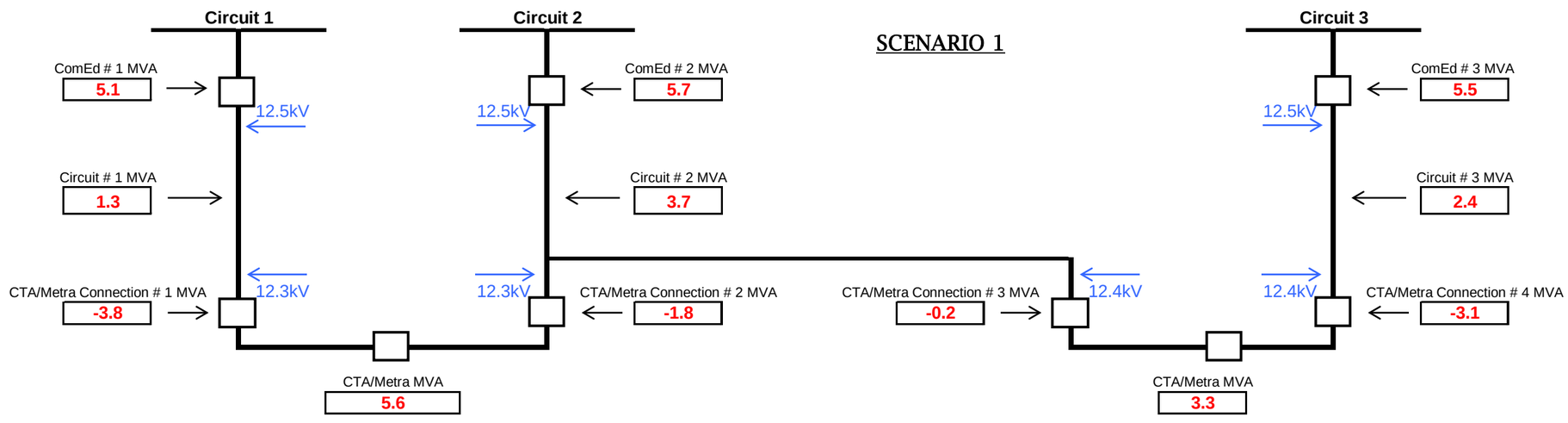

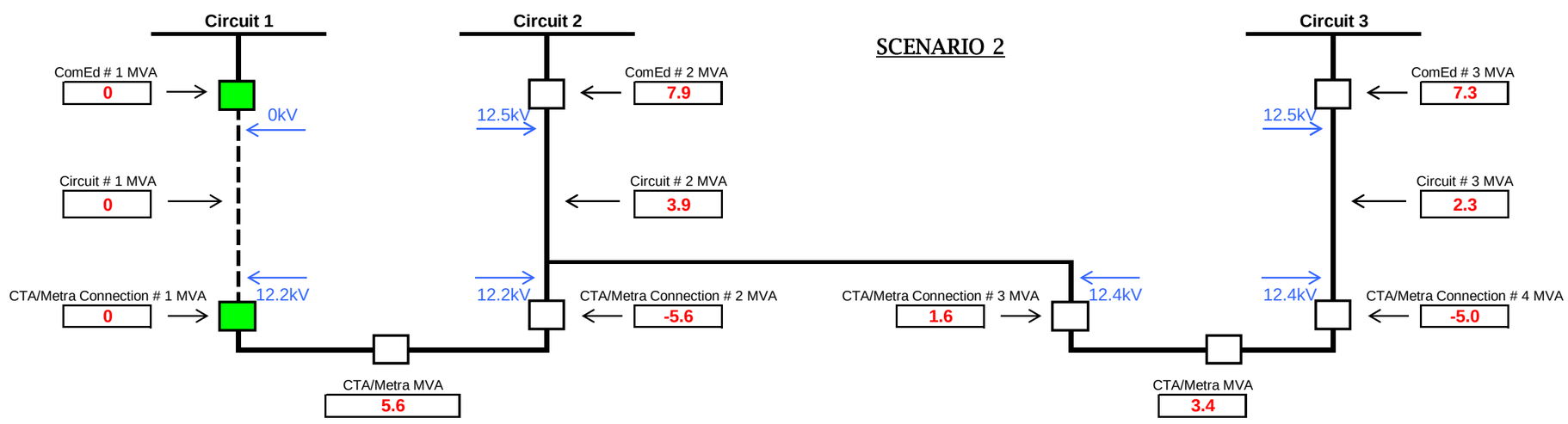

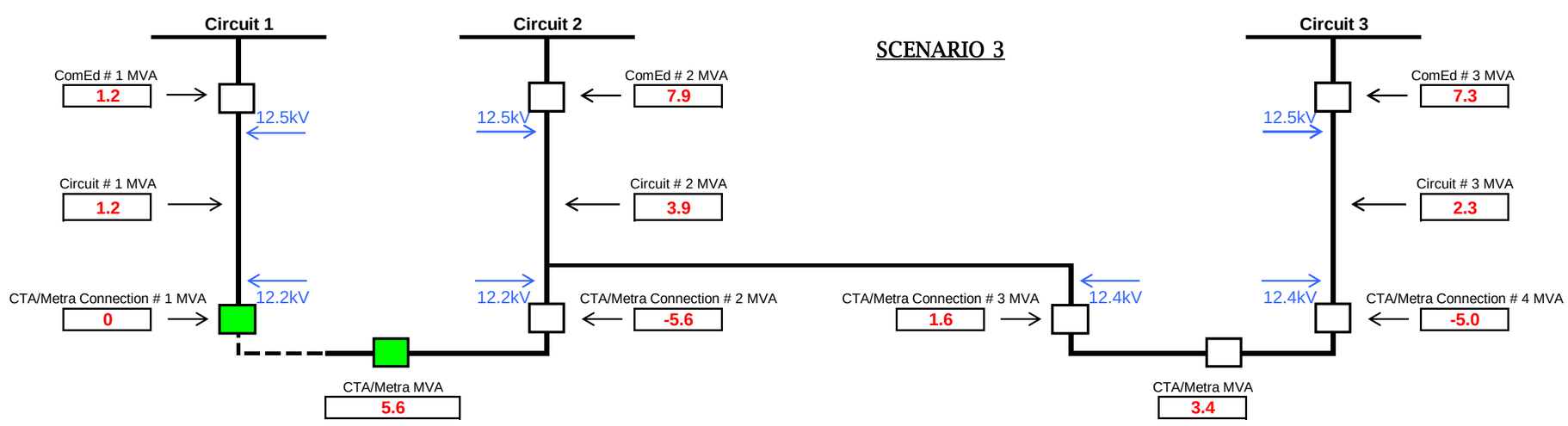

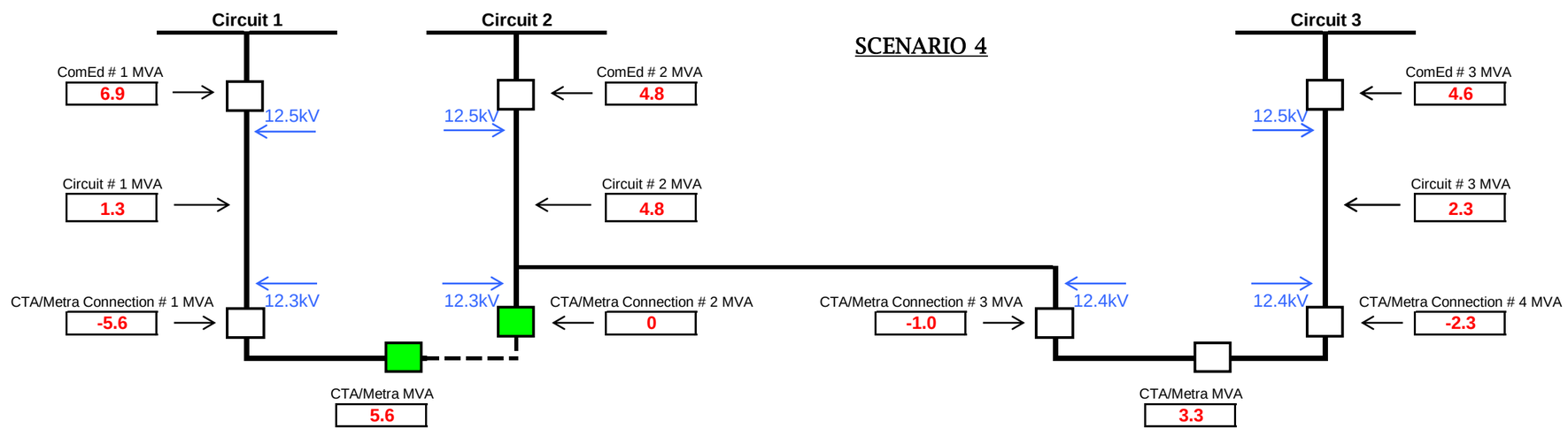
SCENARIO 4
Circuit 1
Circuit 2
Circuit 3
ComEd # 1 MVA
6.9
12.5kV
Circuit # 1 MVA
1.3
CTA/Metra Connection # 1 MVA
-5.6
12.3kV
CTA/Metra MVA
5.6
ComEd # 2 MVA
4.8
12.5kV
Circuit # 2 MVA
4.8
12.3kV
CTA/Metra Connection # 2 MVA
0
CTA/Metra Connection # 3 MVA
-1.0
12.4kV
CTA/Metra MVA
3.3
ComEd # 3 MVA
4.6
12.5kV
Circuit # 3 MVA
2.3
12.4kV
CTA/Metra Connection # 4 MVA
-2.3

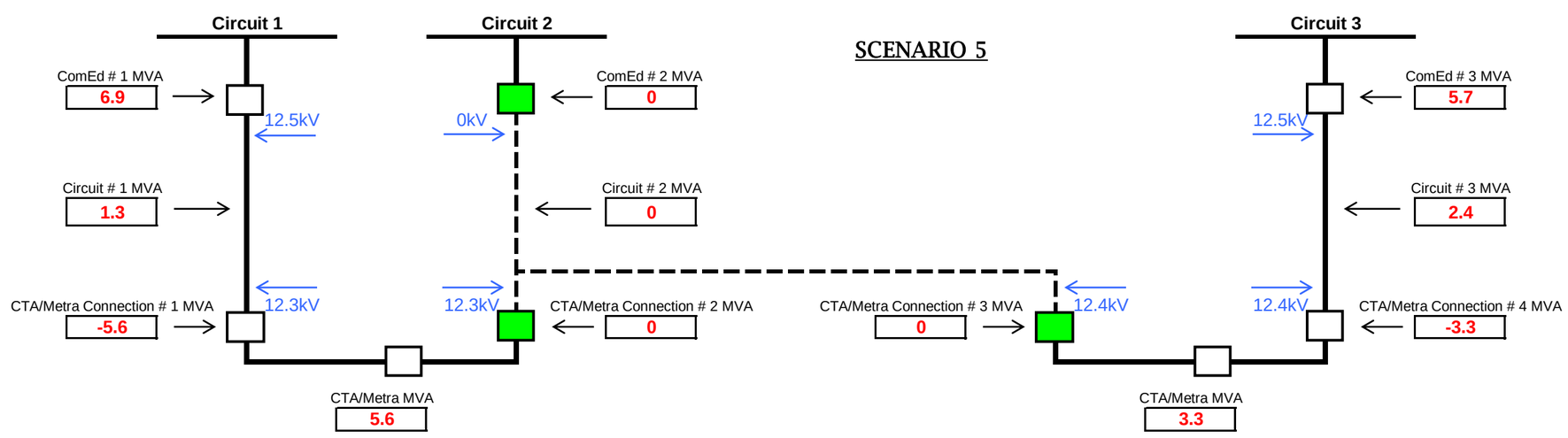
SCENARIO 5
Circuit 1
Circuit 2
Circuit 3
ComEd # 1 MVA
6.9
12.5kV
Circuit # 1 MVA
1.3
CTA/Metra Connection # 1 MVA
-5.6
12.3kV
CTA/Metra MVA
5.6
ComEd # 2 MVA
0
0kV
Circuit # 2 MVA
0
12.3kV
CTA/Metra Connection # 2 MVA
0
CTA/Metra Connection # 3 MVA
0
12.4kV
CTA/Metra MVA
3.3
ComEd # 3 MVA
5.7
12.5kV
Circuit # 3 MVA
2.4
12.4kV
CTA/Metra Connection # 4 MVA
-3.3

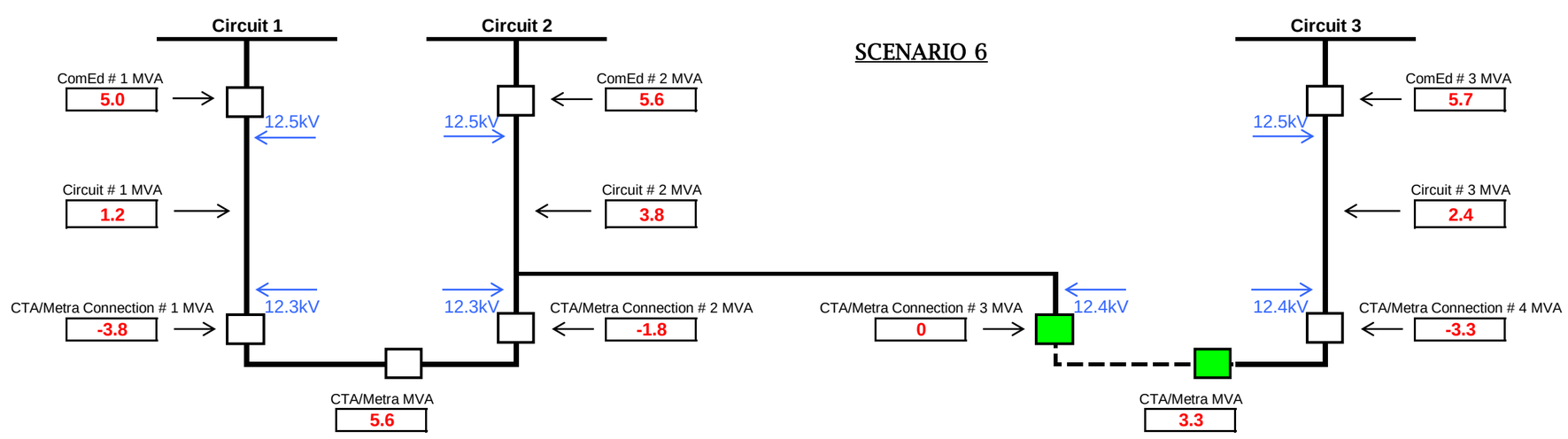
SCENARIO 6
Circuit 1
Circuit 2
Circuit 3
ComEd # 1 MVA
5.0
12.5kV
Circuit # 1 MVA
1.2
CTA/Metra Connection # 1 MVA
-3.8
12.3kV
CTA/Metra MVA
5.6
ComEd # 2 MVA
5.6
12.5kV
Circuit # 2 MVA
3.8
12.3kV
CTA/Metra Connection # 2 MVA
-1.8
CTA/Metra Connection # 3 MVA
0
12.4kV
CTA/Metra MVA
3.3
ComEd # 3 MVA
5.7
12.5kV
Circuit # 3 MVA
2.4
12.4kV
CTA/Metra Connection # 4 MVA
-3.3

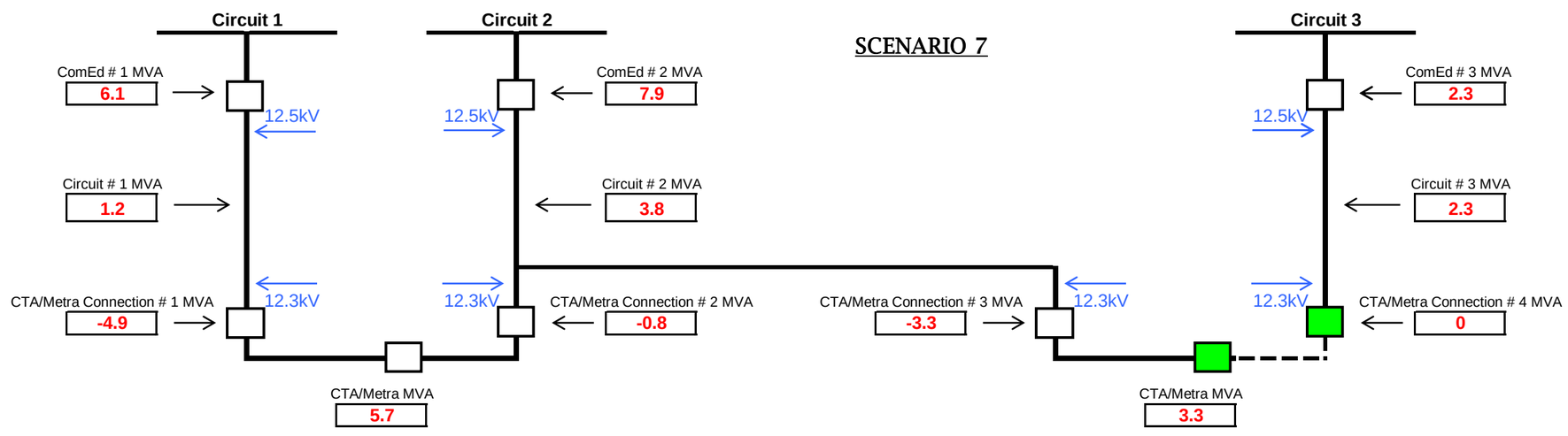
SCENARIO 7
Circuit 1
Circuit 2
Circuit 3
ComEd # 1 MVA
6.1
12.5kV
Circuit # 1 MVA
1.2
CTA/Metra Connection # 1 MVA
-4.9
12.3kV
CTA/Metra MVA
5.7
ComEd # 2 MVA
7.9
12.5kV
Circuit # 2 MVA
3.8
12.3kV
CTA/Metra Connection # 2 MVA
-0.8
CTA/Metra Connection # 3 MVA
-3.3
12.3kV
CTA/Metra MVA
3.3
ComEd # 3 MVA
2.3
12.5kV
Circuit # 3 MVA
2.3
12.3kV
CTA/Metra Connection # 4 MVA
0

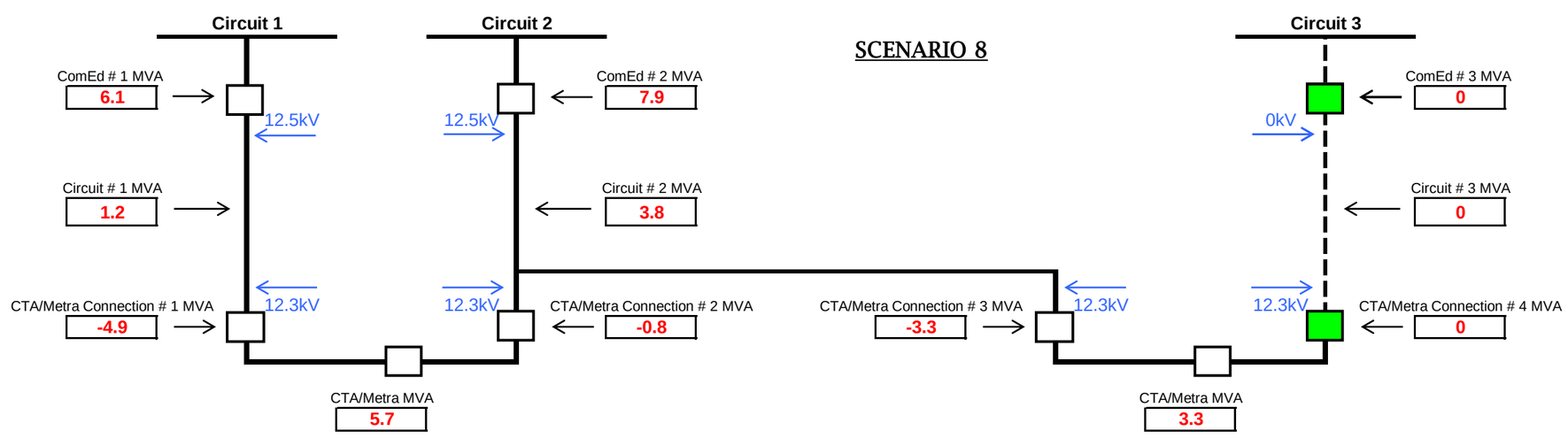
SCENARIO 8
Circuit 1
Circuit 2
Circuit 3
ComEd # 1 MVA
6.1
12.5kV
Circuit # 1 MVA
1.2
CTA/Metra Connection # 1 MVA
-4.9
12.3kV
CTA/Metra MVA
5.7
ComEd # 2 MVA
7.9
12.5kV
Circuit # 2 MVA
3.8
12.3kV
CTA/Metra Connection # 2 MVA
-0.8
CTA/Metra Connection # 3 MVA
-3.3
12.3kV
CTA/Metra MVA
3.3
ComEd # 3 MVA
0
0kV
Circuit # 3 MVA
0
12.3kV
CTA/Metra Connection # 4 MVA
0

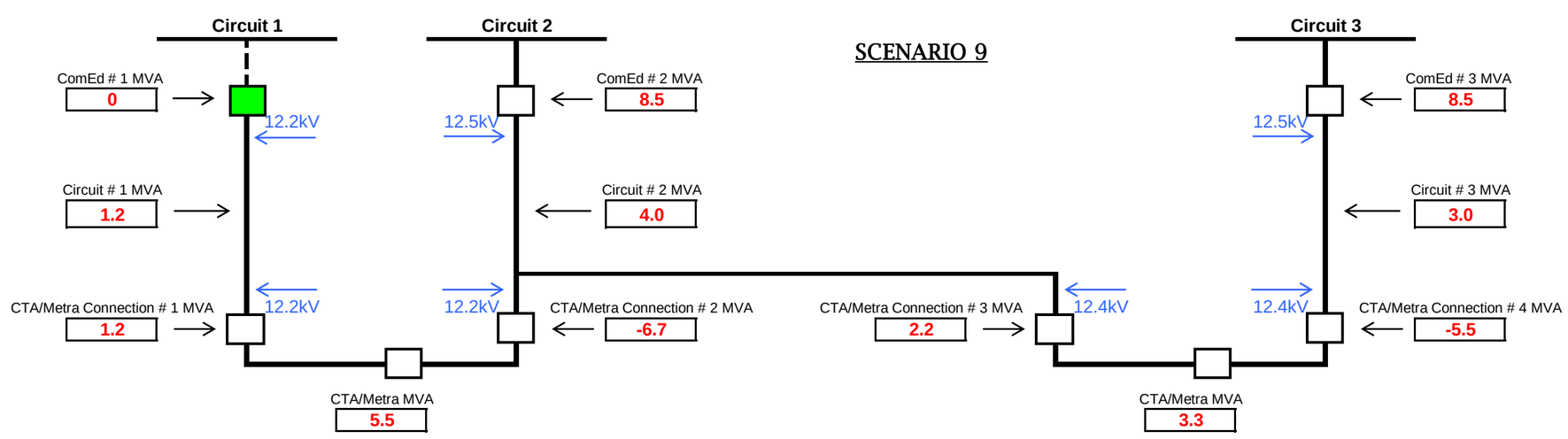
SCENARIO 9
Circuit 1
Circuit 2
Circuit 3
ComEd # 1 MVA
0
12.2kV
Circuit # 1 MVA
1.2
CTA/Metra Connection # 1 MVA
1.2
12.2kV
CTA/Metra MVA
5.5
ComEd # 2 MVA
8.5
12.5kV
Circuit # 2 MVA
4.0
12.2kV
CTA/Metra Connection # 2 MVA
-6.7
CTA/Metra Connection # 3 MVA
2.2
12.4kV
CTA/Metra MVA
3.3
ComEd # 3 MVA
8.5
12.5kV
Circuit # 3 MVA
3.0
12.4kV
CTA/Metra Connection # 4 MVA
-5.5

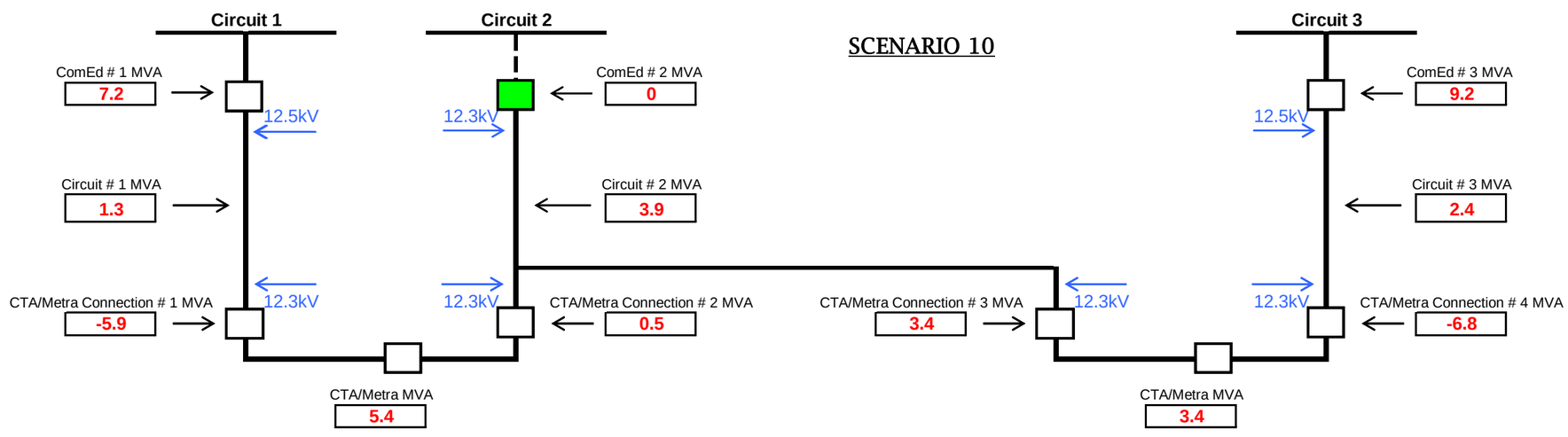
SCENARIO 10
Circuit 1
Circuit 2
Circuit 3
ComEd # 1 MVA
7.2
12.5kV
Circuit # 1 MVA
1.3
CTA/Metra Connection # 1 MVA
-5.9
12.3kV
CTA/Metra MVA
5.4
12.3kV
ComEd # 2 MVA
0
Circuit # 2 MVA
3.9
CTA/Metra Connection # 2 MVA
0.5
CTA/Metra Connection # 3 MVA
3.4
12.3kV
CTA/Metra MVA
3.4
12.5kV
ComEd # 3 MVA
9.2
Circuit # 3 MVA
2.4
12.3kV
CTA/Metra Connection # 4 MVA
-6.8

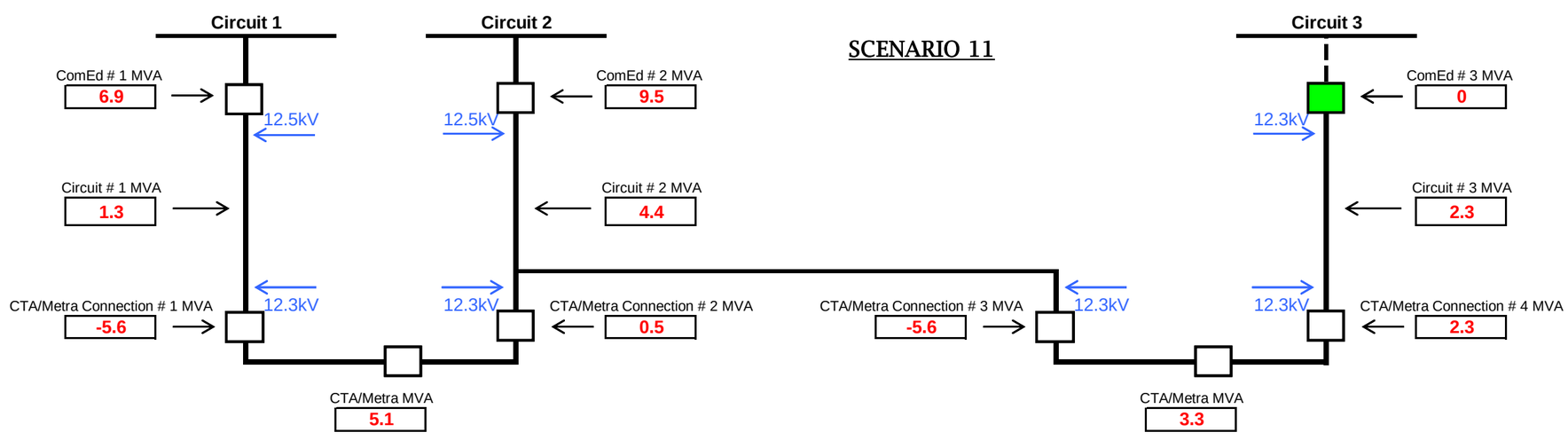
SCENARIO 11
Circuit 1
Circuit 2
Circuit 3
ComEd # 1 MVA
6.9
12.5kV
Circuit # 1 MVA
1.3
CTA/Metra Connection # 1 MVA
-5.6
12.3kV
CTA/Metra MVA
5.1
12.5kV
ComEd # 2 MVA
9.5
Circuit # 2 MVA
4.4
CTA/Metra Connection # 2 MVA
0.5
CTA/Metra Connection # 3 MVA
-5.6
12.3kV
CTA/Metra MVA
3.3
12.3kV
ComEd # 3 MVA
0
Circuit # 3 MVA
2.3
12.3kV
CTA/Metra Connection # 4 MVA
2.3

DDD and BB CYME Study Information

- Loads for all ESS / CTL were assumed according to proportional distribution of APT load information (proportional to nameplate ratings of all transformers). Loads assumed at PF=[redacted].

- [redacted] ([redacted]) substation load was obtained from Cedar Loads. Peak load for each feeding line is [redacted]KVA with assumed PF=[redacted].

- [redacted] ([redacted]) substation load was obtained from Cedar Loads. Peak load for each feeding line is [redacted] KVA with assumed PF=[redacted].

- [redacted] APT load information used.
  - [redacted] APT selected load date: [redacted]
  - [redacted] APT actual load on [redacted] ➔ [redacted]
  - [redacted] APT WA on selected load date: [redacted]
  - [redacted] WA load: [redacted] ➔ [redacted]

- [redacted] APT load information used.
  - [redacted] APT selected load date: [redacted]
  - [redacted] APT actual load on [redacted] ➔ [redacted]
  - [redacted] APT WA on selected load date: [redacted]
  - [redacted] WA load: [redacted] ➔ [redacted]

- [redacted] APT load information used.
  - [redacted] APT selected load date: [redacted]
  - [redacted] APT actual load on [redacted] ➔ [redacted]
  - [redacted] APT WA on selected load date: [redacted]
  - [redacted] WA load: [redacted] ➔ [redacted]

- [redacted] load allocation method
  - Validate in the CYME model all transformers, ESS loads, including [redacted] KVA for each feeding line at [redacted] and [redacted]KVA for each feeding line at [redacted] per Cedar meter information.
  - Bus Tie Breaker at [redacted] on feeder [redacted] identified as the first zero point where [redacted] is supported by feeder [redacted] to the load on the feeder [redacted]. Line Breaker [redacted] at [redacted] was identified as the second zero point where [redacted] is supported by [redacted] to the load on the feeder [redacted]. This allowed for proper load allocation on the three feeders.
  - Enter feeder loads: [redacted] **for** [redacted] (Avg WA [redacted] plus the [redacted] contributed to [redacted])
  - Enter feeder loads: [redacted] **for** [redacted] (Avg WA [redacted] minus the [redacted] supported from [redacted]).
  - Enter feeder loads: [redacted] **for** [redacted] (Avg WA [redacted] minus the [redacted] supported from [redacted] and [redacted]).

- Power factor of [redacted] for [redacted], [redacted] for [redacted] and [redacted] for [redacted] were used during allocation.
- Ignore motors.
- Open zero-point switch and allocate the loads.
- Close zero-point switch and run analysis.

- Physical midpoint on feeder [redacted] is taken at cable section CYMDIST # 195173000; and the endpoint is taken at cable inside [redacted].

- Physical midpoint on feeder [redacted] is taken at cable section CYMDIST # 403487496; and the endpoint is taken at cable inside [redacted].

- Physical midpoint on tie line [redacted] is taken at cable section CYMDIST # 1077507200; and the endpoint is taken at cable inside [redacted].

PUBLIC

DDD and BB CYME Study Results

Scenario	@ CTA Connection #1 (MVA)	@ CTA Connection #2 (MVA)	@ CTA Connection #3 (MVA)	@ CTA Connection #4 (MVA)	@ ComEd Circuit #1 (MVA))	@ ComEd Circuit #2 (MVA)	@ ComEd Circuit #3 (MVA)	@ CTA Connection #1 (kV)	@ CTA Connection #2 (kV)	@ CTA Connection #3 (kV)	@ CTA Connection #4 (kV)	@ ComEd Circuit #1 (kV)	@ ComEd Circuit #2 (kV)	@ ComEd Circuit #3 (kV)	@ ComEd - Circuit #1 Midpoint (kV)	@ ComEd - Circuit #2 Midpoint (kV)	@ ComEd - Circuit #3 Midpoint (kV)	@ ComEd - Circuit #1 Endpoint (kV)	@ ComEd - Circuit #2 Endpoint (kV)	@ ComEd - Circuit #3 Endpoint (kV)
1	-3.8	-1.8	-.2	-3.1	5.1	5.7	5.5	12.3	12.3	12.4	12.4	12.5	12.5	12.5	12.4	12.4	12.4	12.3	12.3	12.3
2	0	-5.6	1.6	-5.0	0	7.9	7.3	12.2	12.2	12.4	12.4	0	12.5	12.5	0	12.3	12.4	0	12.2	12.4
3	0	-5.6	1.6	-5.0	1.2	7.9	7.3	12.2	12.2	12.4	12.4	12.5	12.5	12.5	12.5	12.3	12.4	12.5	12.2	12.4
4	-5.6	0	-1.0	-2.3	6.9	4.8	4.6	12.3	12.3	12.4	12.4	12.5	12.5	12.5	12.3	12.4	12.4	12.3	12.4	12.4
5	-5.6	0	0	-3.3	6.9	0	5.7	12.3	12.3	12.4	12.4	12.5	0	12.5	12.3	0	12.4	12.3	0	12.4
6	-3.8	-1.8	0	-3.3	5.0	5.6	5.7	12.3	12.3	12.4	12.4	12.5	12.5	12.5	12.4	12.4	12.4	12.3	12.3	12.4
7	-4.9	-.8	-3.3	0	6.1	7.9	2.3	12.3	12.3	12.3	12.3	12.5	12.5	12.5	12.4	12.3	12.4	12.3	12.3	12.4
8	-4.9	-.8	-3.3	0	6.1	7.9	0	12.3	12.3	12.3	12.3	12.5	12.5	0	12.4	12.3	0	12.3	12.3	0
9	1.2	-6.7	2.2	-5.5	0	8.5	7.9	12.2	12.2	12.4	12.4	12.2	12.5	12.5	12.2	12.3	12.4	12.2	12.2	12.4
10	-5.9	.5	3.4	-6.8	7.2	0	9.2	12.3	12.3	12.3	12.3	12.5	12.3	12.5	12.3	12.3	12.3	12.3	12.3	12.3
11	-5.6	.5	-5.6	2.3	6.9	9.5	0	12.3	12.3	12.3	12.3	12.5	12.5	12.3	12.4	12.3	12.3	12.3	12.3	12.3

Scenario:

Scenario 1: @ CTA connection #1, #2, #3, and #4 closed, @ ComEd circuit #1, #2, and#3 closed. This represents the normal condition.

Scenario 2: @ CTA connection #1 open and #2, #3 and #4 closed, @ ComEd circuit #1 open and #2 and #3 closed. This represents an outage of ComEd circuit #1.

Scenario 3: @ CTA connection #1 and bus tie open and #2, #3, and #4 closed, @ ComEd circuit #1, #2, and #3 closed. This represents an outage of CTA Bus #1.

Scenario 4: @ CTA connection #2 and bus tie open and #1, #3, and #4, closed, @ ComEd circuit #1, #2, and #3 closed. This represents an outage of CTA Bus #2.

Scenario 5: @ CTA connection #2 and #3 open and #1 and #4 closed, @ ComEd circuit #2 open and #1 and #3 closed. This represents an outage of ComEd circuit #2.

Scenario 6: @ CTA connection #3 and bus tie open and #1, #2, and #4 closed, @ ComEd circuit #1, #2, and #3 closed. This represents an outage of CTA Bus #3.

Scenario 7: @ CTA connection #4 and bus tie open and #1, #2, and #3, closed, @ ComEd circuit #1, #2, and #3 closed. This represents an outage of CTA Bus #4.

Scenario 8: @ CTA connection #4 open and #1, #2, and #3 closed, @ ComEd circuit #3 open and #1 and #2 closed. This represents an outage of ComEd circuit #3.

Scenario 9: @ CTA connection #1, #2, #3, and #4, closed, @ ComEd circuit #1 open and #2 and #3 closed. This represents loss of source for ComEd circuit #1.

Scenario 10: @ CTA connection #1, #2, #3, and #4 closed, @ ComEd circuit #2 open and #1 and #3 closed. This represents loss of source for ComEd circuit #2.

Scenario 11: @ CTA connection #1, #2, #3, and #4 closed, @ ComEd circuit #3 open and #1 and #2 closed. This represents loss of source for ComEd circuit #3.

CONFIDENTIAL AND PROPRIETARY - CEII

DDD AND BB SUBSTATIONS

E CYME Study Results

Scenario	@ CTA / Metra -Connection #1 (MVA)	@ CTA / Metra - Connection #2 (MVA)	@ ComEd - Circuit #1 (MVA)	@ ComEd - Circuit #2 (MVA)	@ CTA / Metra - Connection #1 (kV)	@ CTA / Metra - Connection #2 (kV)	@ ComEd - Circuit #1 (kV)	@ ComEd - Circuit #2 (kV)
1	-1.2	-2.7	7.4	6	12.2	12.2	12.5	12.5
2	0	-3.7	0	7.1	0	12.2	0	12.5
3	0	-3.7	6.3	7.1	12.3	12.2	12.5	12.5
4	-3.7	0	10.2	0	12.1	0	12.5	0
5	-3.7	0	10.2	3.2	12.1	12.4	12.5	12.5
6	6.2	-10.0	0	13.8	11.9	11.9	11.8	12.5
7	-6.9	3.2	13.6	0	12	12	12.5	12
8								

E Cyme Results Comparison

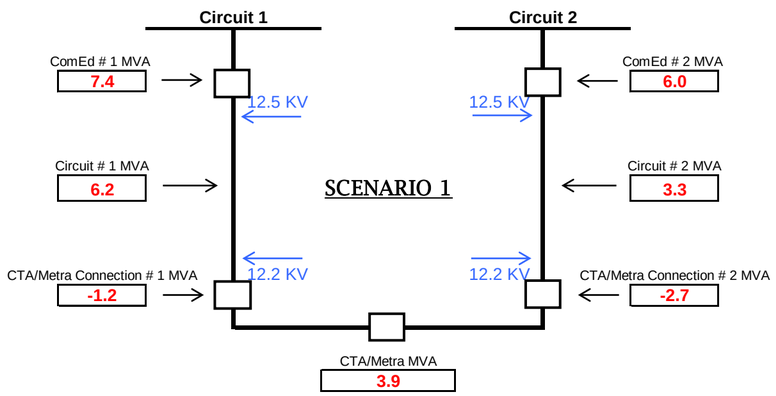

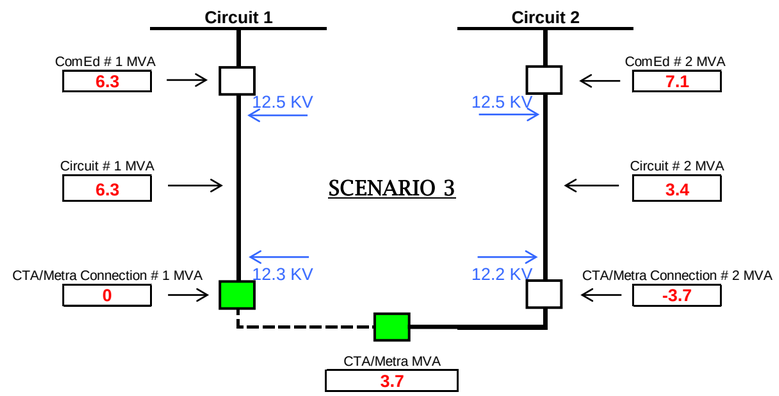

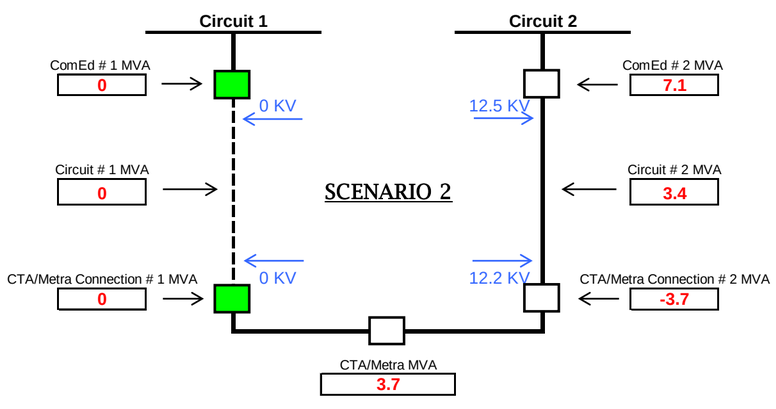

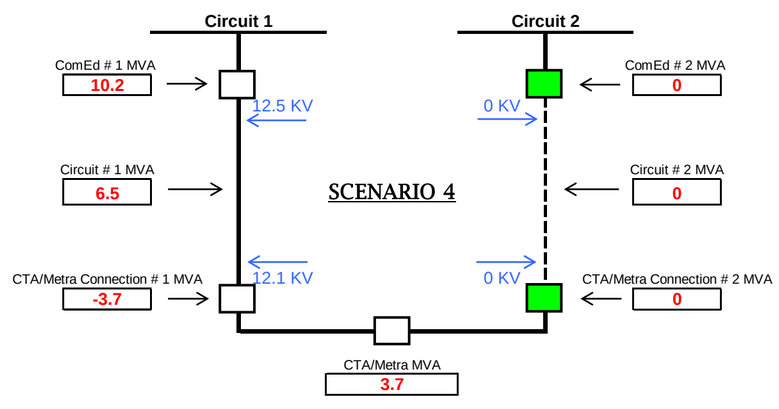

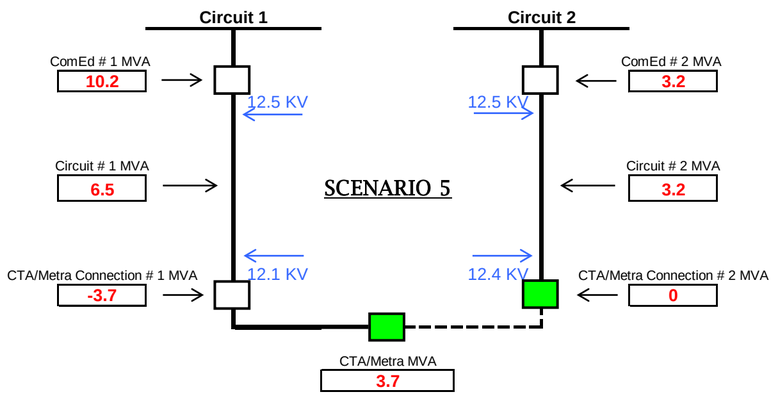
Circuit 1
Circuit 2
ComEd # 1 MVA
10.2
12.5 KV
12.5 KV
ComEd # 2 MVA
3.2
Circuit # 1 MVA
6.5
SCENARIO 5
Circuit # 2 MVA
3.2
12.1 KV
12.4 KV
CTA/Metra Connection # 1 MVA
-3.7
CTA/Metra Connection # 2 MVA
0
CTA/Metra MVA
3.7

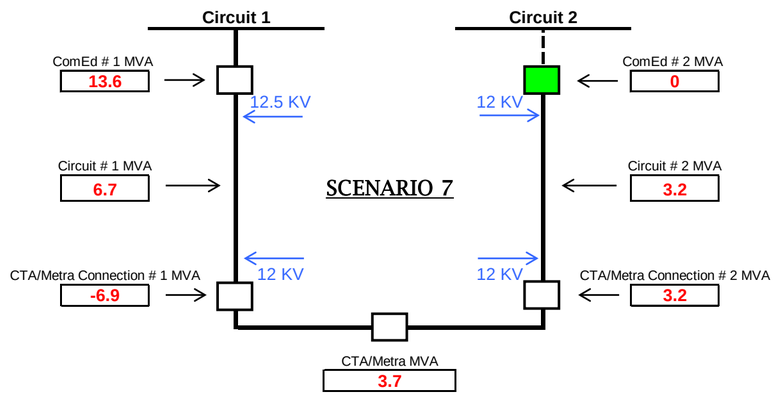
Circuit 1
Circuit 2
ComEd # 1 MVA
13.6
12.5 KV
12 KV
ComEd # 2 MVA
0
Circuit # 1 MVA
6.7
SCENARIO 7
Circuit # 2 MVA
3.2
12 KV
12 KV
CTA/Metra Connection # 1 MVA
-6.9
CTA/Metra Connection # 2 MVA
3.2
CTA/Metra MVA
3.7

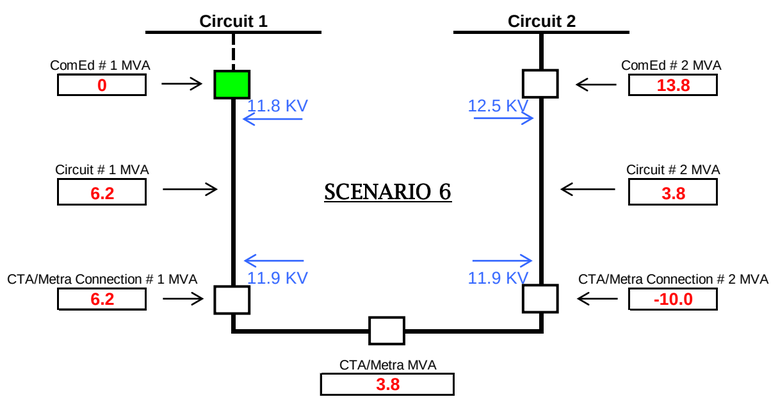
Circuit 1
Circuit 2
ComEd # 1 MVA
0
11.8 KV
12.5 KV
ComEd # 2 MVA
13.8
Circuit # 1 MVA
6.2
SCENARIO 6
Circuit # 2 MVA
3.8
11.9 KV
11.9 KV
CTA/Metra Connection # 1 MVA
6.2
CTA/Metra Connection # 2 MVA
-10.0
CTA/Metra MVA
3.8

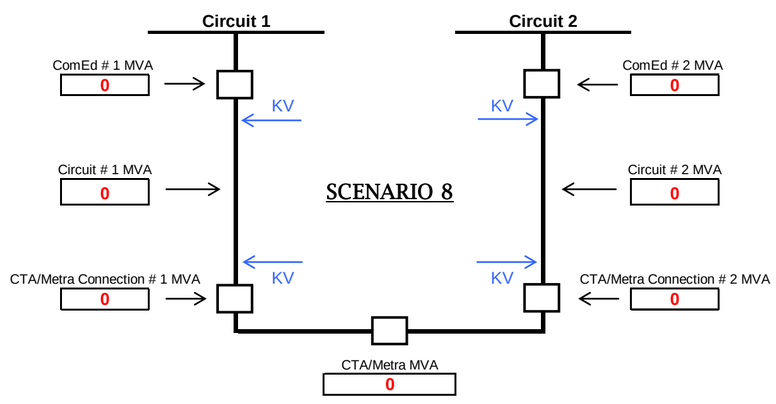
Circuit 1
Circuit 2
ComEd # 1 MVA
0
KV
KV
ComEd # 2 MVA
0
Circuit # 1 MVA
0
SCENARIO 8
Circuit # 2 MVA
0
KV
KV
CTA/Metra Connection # 1 MVA
0
CTA/Metra Connection # 2 MVA
0
CTA/Metra MVA
0

E CYME Study Information

- Info: Disconnected sections 488135846, 112370212, 488116973,488677743, and 775216425 were deleted.

- Warning: Transformer 12_kV-4_kV_600_MVA is no longer in the equipment database. The default will be used (Section: 205048874, Two-Winding Transformer setting: [redacted]) – **changed to 12_kV-4_kV_7500_KVA.**

- Warning: Rated voltage is invalid. The value must be greater than 0.00000. The default value 13.80000 will be used. Rated power is invalid. The value must be greater than 0.00000. The default value 100.00000 will be used. Generator [redacted] is no longer in the equipment database. The default will be used. (Section: 488112570-1, Synchronous Generator Setting: [redacted]) – **Generator information not available, used default values, generator turned off.**

- Warning: Cable 1/0XLPEAL-12KV could not be found in the equipment database. The default will be used (Section: 914811887, Underground: 914811887) – **1/0EXLJAL_12KV used to match downstream cable.**

- [redacted] replaced [redacted] but customers still connected to [redacted] per SBT. Used last recorded ([redacted]) Passport load for [redacted] of [redacted]KVA for the summer.

- [redacted] substation load obtained from CIMS for [redacted] (KW with [redacted]pf).

- [redacted] replaced [redacted], [redacted], and [redacted] but customers still connected to [redacted], [redacted], and [redacted] per SBT. Used last recorded ([redacted]) Passport load for [redacted], [redacted], and [redacted] of [redacted]KVA, [redacted]KVA, and [redacted]KVA ([redacted]KVA total) for the summer.

- Used [redacted] APT selected load for [redacted] (KW with [redacted]pf).

- [redacted] substation load obtained from CEDAR for [redacted] (KW with [redacted]pf).

- [redacted] APT load information used.
  - [redacted] APT selected load date: [redacted].
  - [redacted] APT actual load on [redacted]: [redacted]
  - [redacted] APT WA on selected load date: [redacted]
  - [redacted] WA load: [redacted]

E CYME Study Information

- [redacted] APT load information used.
  - [redacted] APT selected load date: [redacted].
  - [redacted] APT actual load on [redacted]: [redacted]
  - [redacted] APT WA on selected load date: [redacted]
  - [redacted] WA load: [redacted]

- [redacted] load allocation method
  - Open bus tie at [redacted] substation.
  - Allocate [redacted]A ([redacted]A plus [redacted]A) on [redacted].
  - Allocate [redacted]A ([redacted]A minus [redacted]A) on [redacted].
  - [redacted]A is the [redacted]A of flow from [redacted] with [redacted] WA at the zero point prior to radial load allocation.
  - Ignore motors
  - Adjust pf at source [redacted]pf for [redacted], [redacted]pf for [redacted]) and allocate to obtain an adjusted load PF of [redacted] – [redacted] on both feeders [redacted] for [redacted], [redacted] for [redacted]).
  - Close bus tie at [redacted] substation and run analysis.

- [redacted] midpoint KV taken at cable section 488145252 and endpoint KV taken at overhead section 438163710-1.

- [redacted] midpoint KV taken at cable section 488143650 and endpoint KV taken at cable section before the [redacted] breaker.

E CYME Study Results

Scenario	@ CTA -Connection #1 (MVA)	@ CTA - Connection #2 (MVA)	@ ComEd - Circuit #1 (MVA)	@ ComEd - Circuit #2 (MVA)	@ CTA -Connection #1 (kV)	@ CTA - Connection #2 (kV)	@ ComEd - Circuit #1 (kV)	@ ComEd - Circuit #2 (kV)	@ ComEd - Circuit #1 Midpoint (kV)	@ ComEd - Circuit #2 Midpoint (kV)	@ ComEd - Circuit #1 Endpoint (kV)	@ ComEd - Circuit #2 Endpoint (kV)
1	-1.2	-2.7	+7.4	+6.0	12.2	12.2	12.5	12.5	12.3	12.4	12.2	12.2
2	0.0	-3.7	0.0	+7.1	0.0	12.2	0.0	12.5	0.0	12.3	0.0	12.2
3	0.0	-3.7	+6.3	+7.1	12.3	12.2	12.5	12.5	12.4	12.3	12.3	12.2
4	-3.7	0.0	+10.2	0.0	12.1	0.0	12.5	0.0	12.3	0.0	12.1	0.0
5	-3.7	0.0	+10.2	+3.2	12.1	12.4	12.5	12.5	12.3	12.4	12.1	12.4
6	+6.2	-10.0	0.0	+13.8	11.9	11.9	11.8	12.5	11.9	12.2	11.9	11.9
7	-6.9	+3.2	+13.6	0.0	12.0	12.0	12.5	12.0	12.2	12.0	12.0	12.0

Scenario:

Scenario 1: @ CTA/Metra connection #1 and #2 closed, @ ComEd circuit #1 and #2 closed. This represents the normal condition.

Scenario 2: @ CTA/Metra connection #1 open and #2 closed, @ ComEd circuit #1 open and #2 closed. This represents an outage of ComEd circuit #1.

Scenario 3: @ CTA/Metra connection #1 and bus tie open and #2 closed, @ ComEd circuit #1 and #2 closed. This represents an outage of CTA/Metra Bus #1.

Scenario 4: @ CTA/Metra connection #1 closed and #2 open, @ ComEd circuit #1 closed and #2 open. This represents an outage of ComEd circuit #2.

Scenario 5: @ CTA/Metra connection #1 closed and #2 and bus tie open, @ ComEd circuit #1 and #2 closed. This represents an outage of CTA/Metra Bus #2.

Scenario 6: @ CTA/Metra connection #1 and #2 closed, @ ComEd circuit #1 open and #2 closed. This represents loss of source for ComEd circuit #1.

Scenario 7: @ CTA/Metra connection #1 and #2 closed, @ ComEd circuit #1 closed and #2 open. This represents loss of source for ComEd circuit #2.

CONFIDENTIAL AND PROPRIETARY - CEII

E SUBSTATION

EE CYME Study Results

Scenario	@ CTA / Metra -Connection #1 (MVA)	@ CTA / Metra - Connection #2 (MVA)	@ ComEd - Circuit #1 (MVA)	@ ComEd - Circuit #2 (MVA)	@ CTA / Metra - Connection #1 (kV)	@ CTA / Metra - Connection #2 (kV)	@ ComEd - Circuit #1 (kV)	@ ComEd - Circuit #2 (kV)
1	-1.2	-0.4	4.7	4.9	12.4	12.4	12.5	12.5
2	0	-1.4	0	6.1	0	12.4	0	12.5
3	0	-1.4	3.4	6.1	12.4	12.4	12.5	12.5
4	-1.4	0	4.9	0	12.4	0	12.5	0
5	-1.4	0	4.9	4.7	12.4	12.4	12.5	12.5
6	3.4	-4.9	0	9.7	12.3	12.3	12.3	12.5
7	-6.1	4.7	9.7	0	12.3	12.3	12.5	12.3
8								

EE CYME Results Comparison

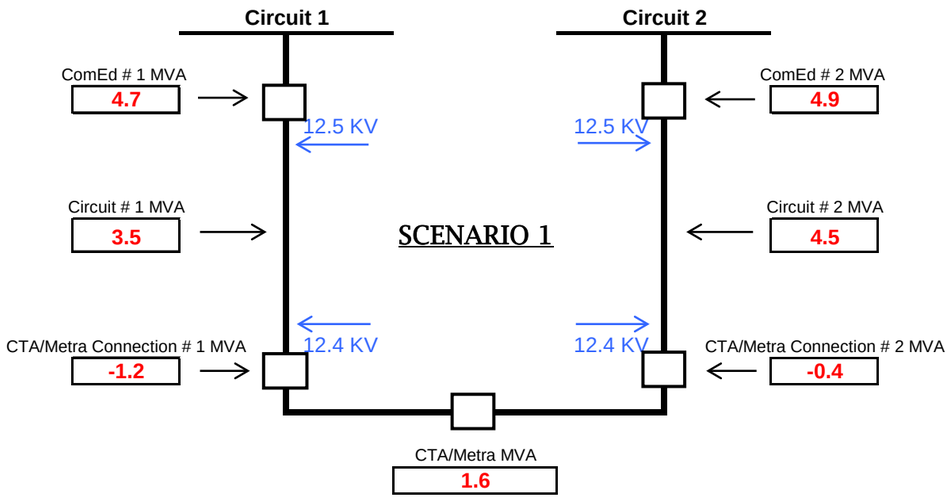

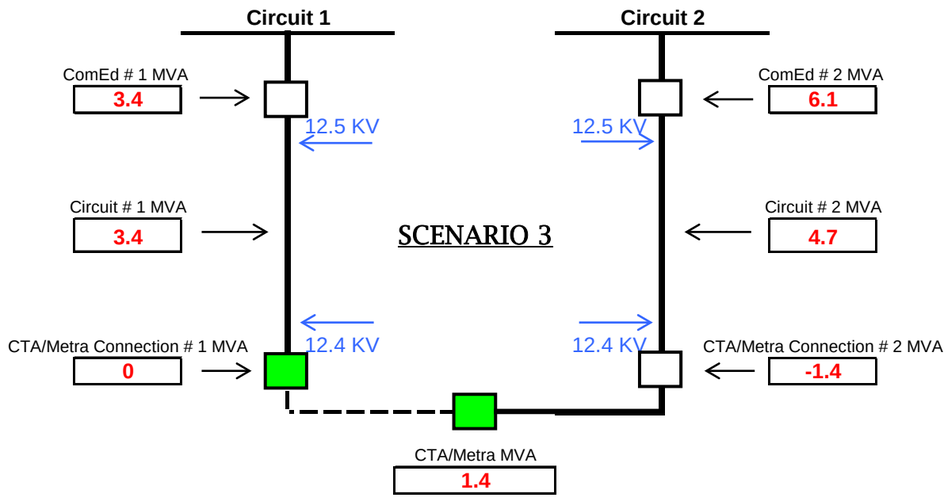

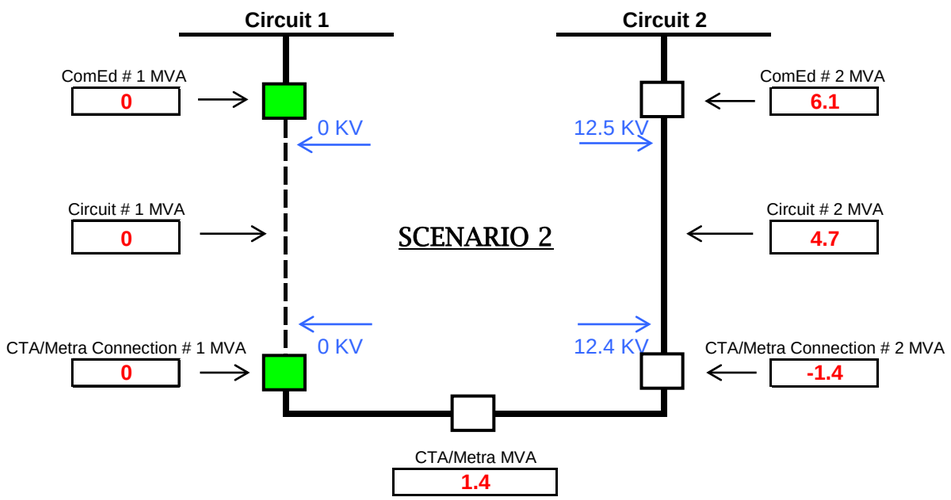

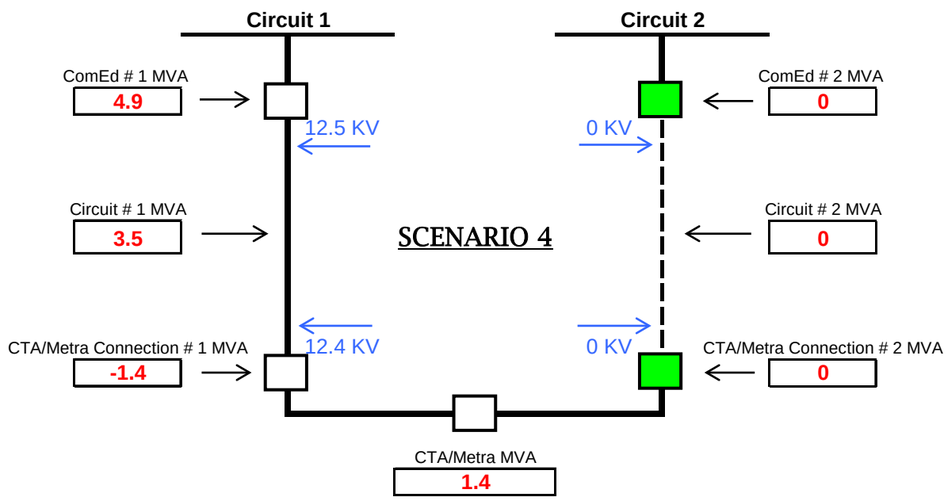

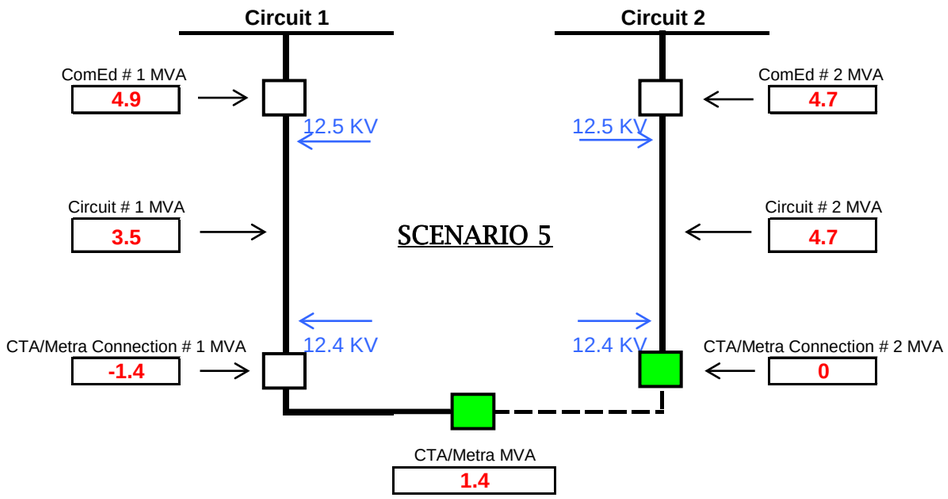
Circuit 1
Circuit 2
ComEd # 1 MVA
4.9
ComEd # 2 MVA
4.7
12.5 KV
12.5 KV
Circuit # 1 MVA
3.5
SCENARIO 5
Circuit # 2 MVA
4.7
CTA/Metra Connection # 1 MVA
-1.4
12.4 KV
12.4 KV
CTA/Metra Connection # 2 MVA
0
CTA/Metra MVA
1.4

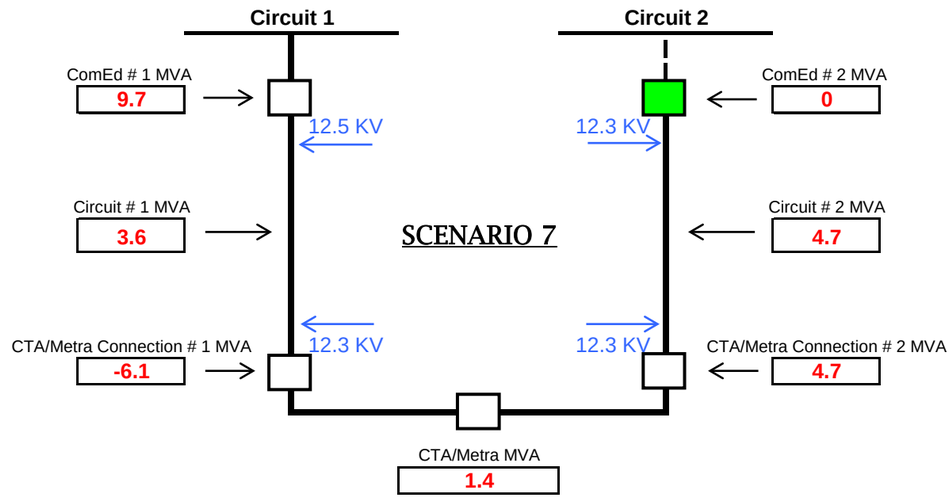
Circuit 1
Circuit 2
ComEd # 1 MVA
9.7
ComEd # 2 MVA
0
12.5 KV
12.3 KV
Circuit # 1 MVA
3.6
SCENARIO 7
Circuit # 2 MVA
4.7
CTA/Metra Connection # 1 MVA
-6.1
12.3 KV
12.3 KV
CTA/Metra Connection # 2 MVA
4.7
CTA/Metra MVA
1.4

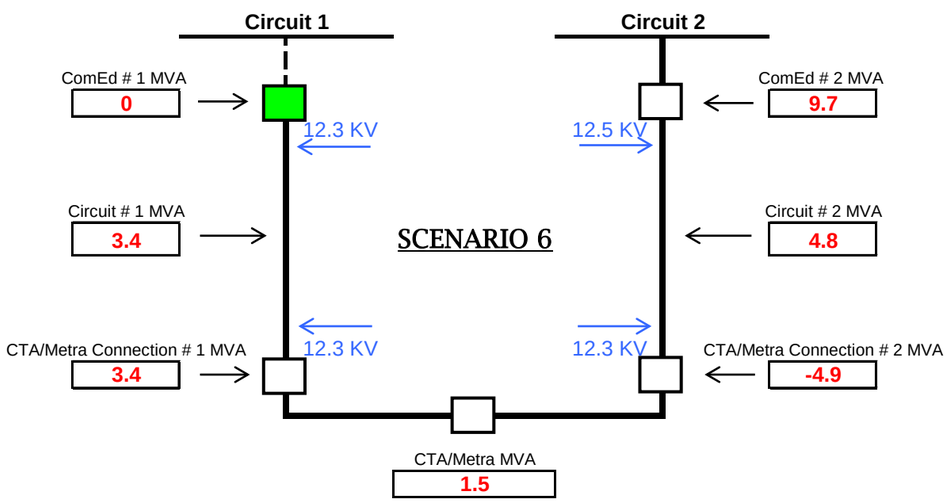
Circuit 1
Circuit 2
ComEd # 1 MVA
0
ComEd # 2 MVA
9.7
12.3 KV
12.5 KV
Circuit # 1 MVA
3.4
SCENARIO 6
Circuit # 2 MVA
4.8
CTA/Metra Connection # 1 MVA
3.4
12.3 KV
12.3 KV
CTA/Metra Connection # 2 MVA
-4.9
CTA/Metra MVA
1.5

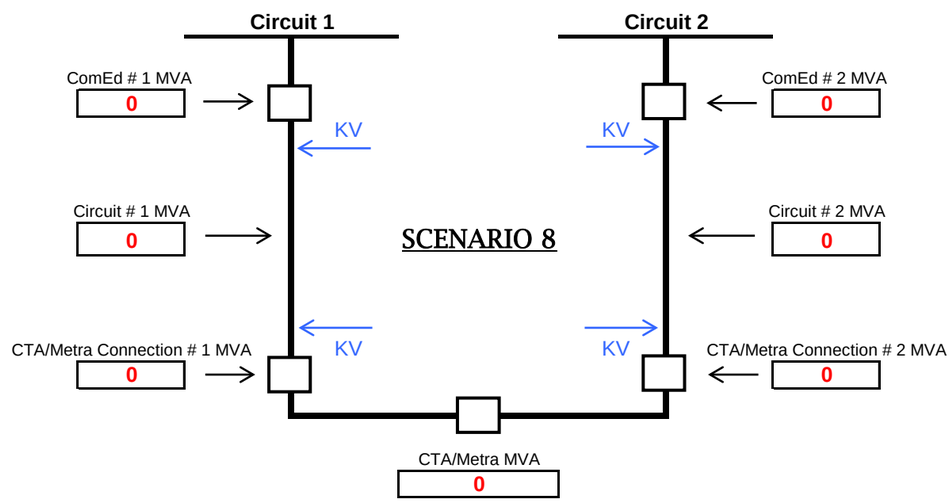
Circuit 1
Circuit 2
ComEd # 1 MVA
0
ComEd # 2 MVA
0
KV
KV
Circuit # 1 MVA
0
SCENARIO 8
Circuit # 2 MVA
0
CTA/Metra Connection # 1 MVA
0
KV
KV
CTA/Metra Connection # 2 MVA
0
CTA/Metra MVA
0

EE CYME Study Information

- [redacted] substation load obtained from CEDAR for [redacted] ([redacted]KW with [redacted]pf for each line).

- [redacted] APT load information used.
  - [redacted] APT selected load date: [redacted].
  - [redacted] APT actual load on [redacted]: [redacted]A
  - [redacted] APT WA on selected load date: [redacted]
  - [redacted] WA load: [redacted]A

- [redacted] APT load information used.
  - [redacted] APT selected load date: [redacted].
  - [redacted] APT actual load on [redacted]: [redacted]A
  - [redacted] APT WA on selected load date: [redacted]
  - [redacted] WA load: [redacted]A

- [redacted] load allocation method
  - Open BT breaker at [redacted] substation.
  - Allocate [redacted]A ([redacted]A plus [redacted]A) on [redacted] with [redacted]pf.
  - Allocate [redacted]A ([redacted]A minus [redacted]A) on [redacted] with [redacted].
  - [redacted]A is the [redacted]A of flow from [redacted] with [redacted] WA at the zero point prior to radial load allocation.
  - Ignore motors.
  - Close BT breaker at [redacted] substation and run analysis.

- [redacted] midpoint KV taken at cable section 488718637 and endpoint KV taken at cable section 488267770.

- [redacted] midpoint KV taken at cable section 488677708 and endpoint KV taken at cable section 488716619.

EE CYME Study Results

Scenario	@ CTA -Connection #1 (MVA)	@ CTA - Connection #2 (MVA)	@ ComEd - Circuit #1 (MVA)	@ ComEd - Circuit #2 (MVA)	@ CTA -Connection #1 (kV)	@ CTA - Connection #2 (kV)	@ ComEd - Circuit #1 (kV)	@ ComEd - Circuit #2 (kV)	@ ComEd - Circuit #1 Midpoint (kV)	@ ComEd - Circuit #2 Midpoint (kV)	@ ComEd - Circuit #1 Endpoint (kV)	@ ComEd - Circuit #2 Endpoint (kV)
1	-1.2	-0.4	+4.7	+4.9	12.4	12.4	12.5	12.5	12.5	12.5	12.4	12.4
2	0	-1.4	0	+6.1	0	12.4	0	12.5	0	12.4	0	12.4
3	0	-1.4	+3.4	+6.1	12.4	12.4	12.5	12.5	12.5	12.4	12.4	12.4
4	-1.4	0	+4.9	0	12.4	0	12.5	0	12.4	0	12.4	0
5	-1.4	0	+4.9	+4.7	12.4	12.4	12.5	12.5	12.4	12.5	12.4	12.4
6	+3.4	-4.9	0	+9.7	12.3	12.3	12.3	12.5	12.3	12.4	12.3	12.3
7	-6.1	+4.7	+9.7	0	12.3	12.3	12.5	12.3	12.4	12.3	12.3	12.3

Scenario:

Scenario 1: @ CTA connection #1 and #2 closed, @ ComEd circuit #1 and #2 closed. This represents the normal condition.

Scenario 2: @ CTA connection #1 open and #2 closed, @ ComEd circuit #1 open and #2 closed. This represents an outage of ComEd circuit #1.

Scenario 3: @ CTA connection #1 and bus tie open and #2 closed, @ ComEd circuit #1 and #2 closed. This represents an outage of CTA Bus #1.

Scenario 4: @ CTA connection #1 closed and #2 open, @ ComEd circuit #1 closed and #2 open. This represents an outage of ComEd circuit #2.

Scenario 5: @ CTA connection #1 closed and #2 and bus tie open, @ ComEd circuit #1 and #2 closed. This represents an outage of CTA Bus #2.

Scenario 6: @ CTA connection #1 and #2 closed, @ ComEd circuit #1 open and #2 closed. This represents loss of source for ComEd circuit #1.

Scenario 7: @ CTA connection #1 and #2 closed, @ ComEd circuit #1 closed and #2 open. This represents loss of source for ComEd circuit #2.

CONFIDENTIAL AND PROPRIETARY - CEII

EE SUBSTATION

EEE - CYME Study Results

Scenario	@ CTA / Metra - Connection #1 (MVA)	@ CTA / Metra - Connection #2 (MVA)	@ ComEd - Circuit #1 (MVA)	@ ComEd - Circuit #2 (MVA)	@ CTA / Metra - Connection #1 (kV)	@ CTA / Metra - Connection #2 (kV)	@ ComEd - Circuit #1 (kV)	@ ComEd - Circuit #2 (kV)
1	-1.3	-0.4	5.9	5.4	12.3	12.3	12.5	12.5
2	0.0	-1.6	0.0	6.6	0.0	12.2	0.0	12.5
3	0.0	-1.6	4.7	6.6	12.4	12.2	12.5	12.5
4	-1.6	0.0	6.3	0.0	12.3	0.0	12.5	0.0
5	-1.6	0.0	6.3	4.9	12.3	12.3	12.5	12.5
6	4.4	-5.9	0.0	11.2	11.9	11.9	11.9	12.5
7	-6.3	4.8	11.2	0.0	12.0	12.0	12.5	11.9

EEE Cyme Results Comparison

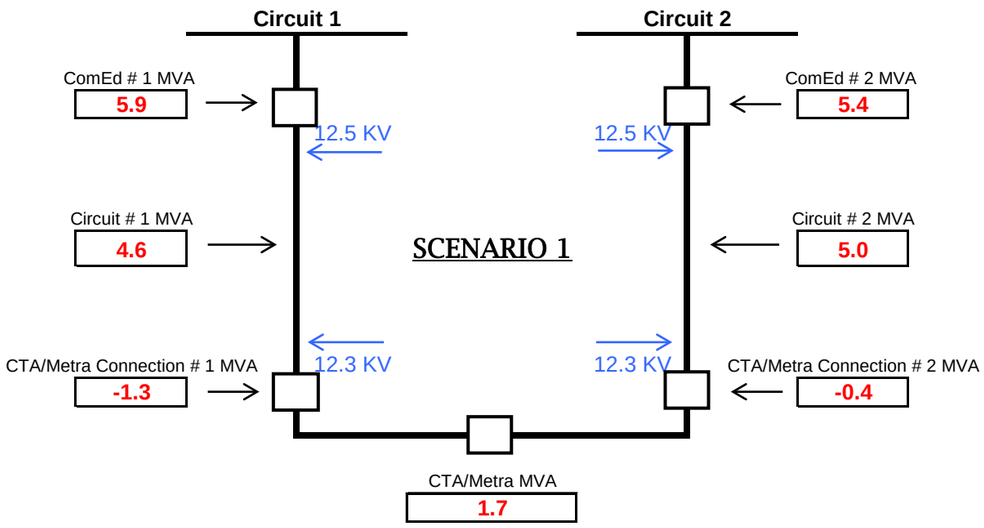

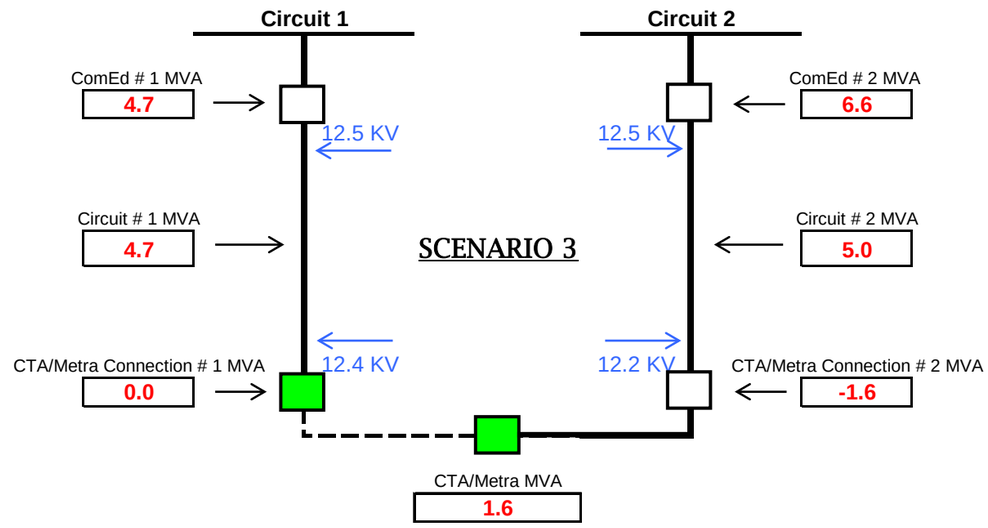

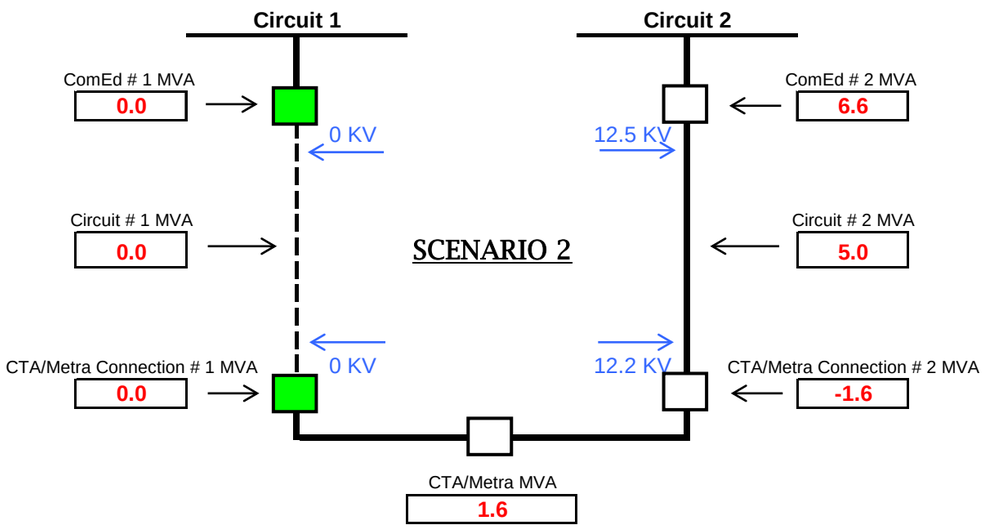

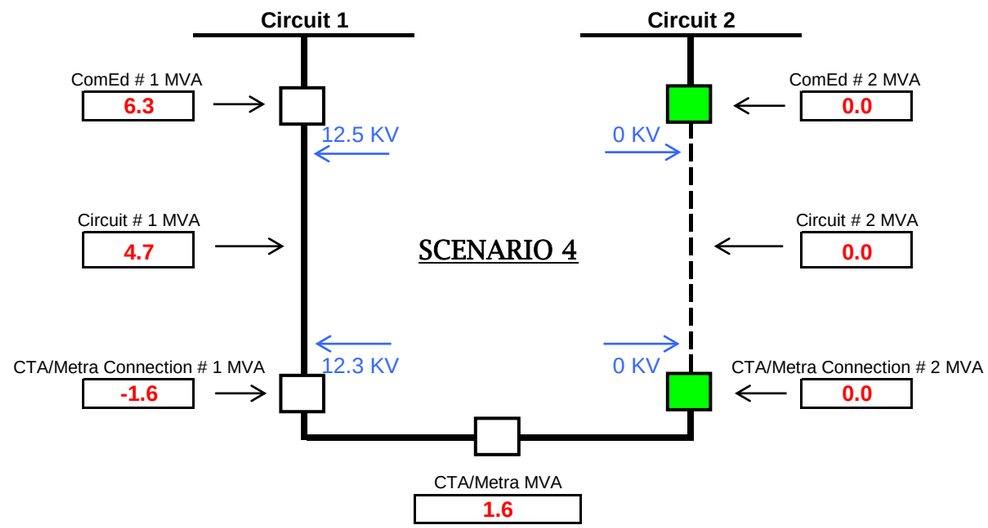

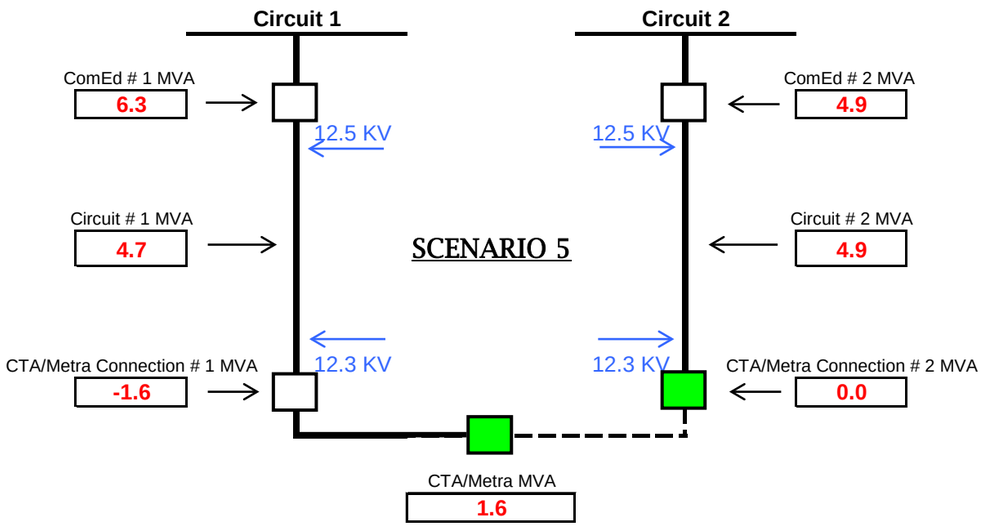
Circuit 1
Circuit 2
ComEd # 1 MVA
6.3
12.5 KV
12.5 KV
ComEd # 2 MVA
4.9
Circuit # 1 MVA
4.7
SCENARIO 5
Circuit # 2 MVA
4.9
CTA/Metra Connection # 1 MVA
-1.6
12.3 KV
12.3 KV
CTA/Metra Connection # 2 MVA
0.0
CTA/Metra MVA
1.6

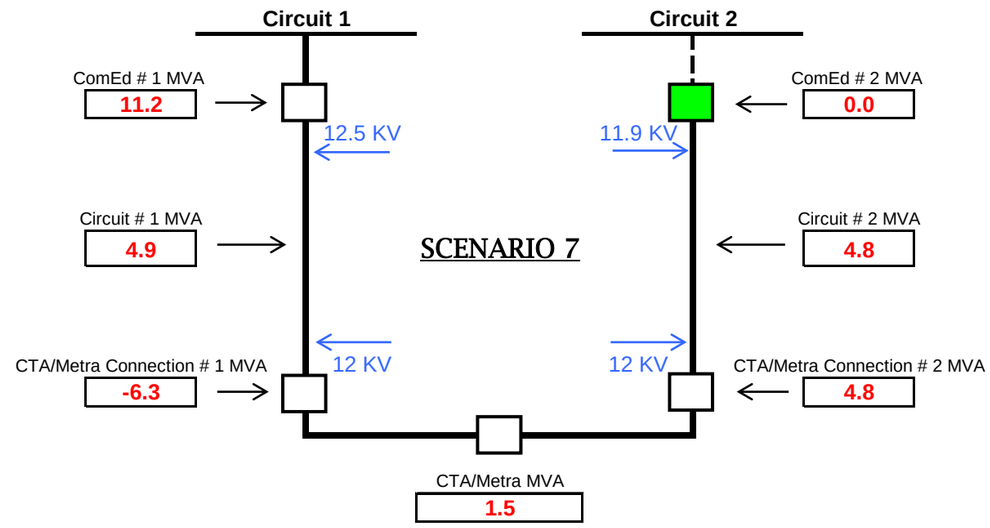
Circuit 1
Circuit 2
ComEd # 1 MVA
11.2
12.5 KV
11.9 KV
ComEd # 2 MVA
0.0
Circuit # 1 MVA
4.9
SCENARIO 7
Circuit # 2 MVA
4.8
CTA/Metra Connection # 1 MVA
-6.3
12 KV
12 KV
CTA/Metra Connection # 2 MVA
4.8
CTA/Metra MVA
1.5

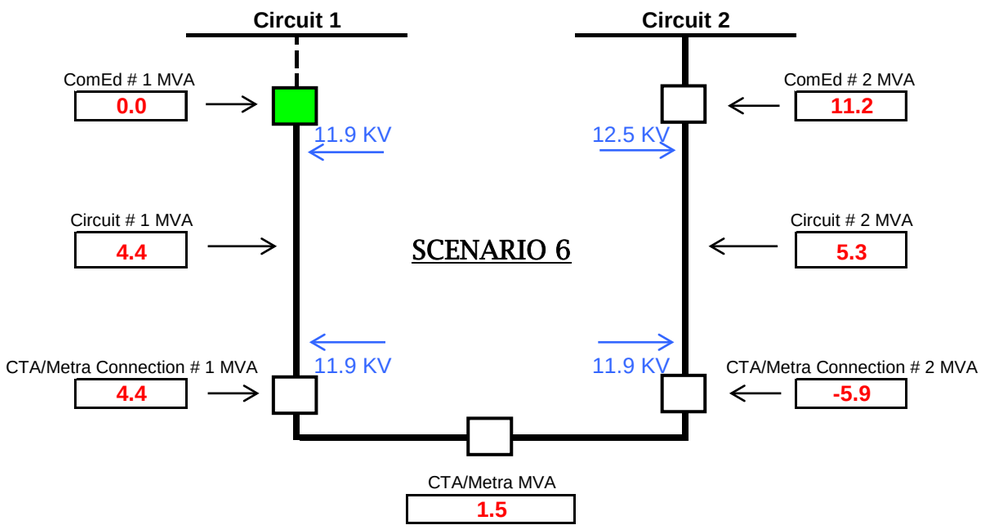
Circuit 1
Circuit 2
ComEd # 1 MVA
0.0
11.9 KV
12.5 KV
ComEd # 2 MVA
11.2
Circuit # 1 MVA
4.4
SCENARIO 6
Circuit # 2 MVA
5.3
CTA/Metra Connection # 1 MVA
4.4
11.9 KV
11.9 KV
CTA/Metra Connection # 2 MVA
-5.9
CTA/Metra MVA
1.5

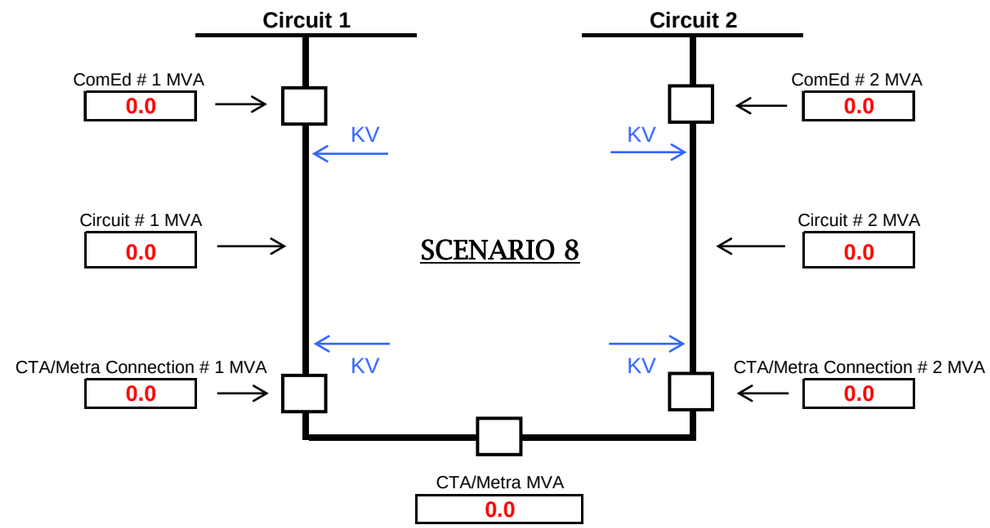
Circuit 1
Circuit 2
ComEd # 1 MVA
0.0
KV
KV
ComEd # 2 MVA
0.0
Circuit # 1 MVA
0.0
SCENARIO 8
Circuit # 2 MVA
0.0
CTA/Metra Connection # 1 MVA
0.0
KV
KV
CTA/Metra Connection # 2 MVA
0.0
CTA/Metra MVA
0.0

EEE- CYME Study Results

Scenario	@ CTA - Connection #1 (MVA)	@ CTA - Connection #2 (MVA)	@ ComEd - Circuit #1 (MVA)	@ ComEd - Circuit #2 (MVA)	@ CTA - Connection #1 (kV)	@ CTA - Connection #2 (kV)	@ ComEd - Circuit #1 (kV)	@ ComEd - Circuit #2 (kV)	@ ComEd - Circuit #1 Midpoint (kV)	@ ComEd - Circuit #2 Midpoint (kV)	@ ComEd - Circuit #1 Endpoint (kV)	@ ComEd - Circuit #2 Endpoint (kV)
1	-1.3	-0.4	5.9	5.4	12.3	12.3	12.5	12.5	12.3	12.3	12.3	12.3
2	0.0	-1.6	0.0	6.6	0.0	12.2	0.0	12.5	0.0	12.2	0.0	12.2
3	0.0	-1.6	4.7	6.6	12.4	12.2	12.5	12.5	12.4	12.2	12.4	12.2
4	-1.6	0.0	6.3	0.0	12.3	0.0	12.5	0.0	12.3	0.0	12.3	0.0
5	-1.6	0.0	6.3	4.9	12.3	12.3	12.5	12.5	12.3	12.3	12.3	12.3
6	4.4	-5.9	0.0	11.2	11.9	11.9	11.9	12.5	11.9	12.0	11.9	11.9
7	-6.3	4.8	11.2	0.0	12.0	12.0	12.5	11.9	12.3	12.2	12.2	12.2

Scenario:

Scenario 1: @ CTA/Metra connection #1 and #2 closed, @ ComEd circuit #1 and #2 closed. This represents the normal condition.

Scenario 2: @ CTA/Metra connection #1 open and #2 closed, @ ComEd circuit #1 open and #2 closed. This represents an outage of ComEd circuit #1.

Scenario 3: @ CTA/Metra connection #1 and bus tie open and #2 closed, @ ComEd circuit #1 and #2 closed. This represents an outage of CTA/Metra Bus #1.

Scenario 4: @ CTA/Metra connection #1 closed and #2 open, @ ComEd circuit #1 closed and #2 open. This represents an outage of ComEd circuit #2.

Scenario 5: @ CTA/Metra connection #1 closed and #2 and bus tie open, @ ComEd circuit #1 and #2 closed. This represents an outage of CTA/Metra Bus #2.

Scenario 6: @ CTA/Metra connection #1 and #2 closed, @ ComEd circuit #1 open and #2 closed. This represents loss of source for ComEd circuit #1.

Scenario 7: @ CTA/Metra connection #1 and #2 closed, @ ComEd circuit #1 closed and #2 open. This represents loss of source for ComEd circuit #2.

EEE- CYME Study Information

- [redacted] ([redacted]) substation load was obtained from Cedar Loads. Peak load for each feeding line is [redacted]kW with assumed PF=[redacted].

- [redacted] APT load information used.
  - [redacted] APT selected load date: [redacted]
  - [redacted] APT actual load on [redacted]: [redacted]A ➔ [redacted]A
  - [redacted] APT WA on selected load date: [redacted]
  - [redacted] WA load: [redacted]A ➔ [redacted]A

- [redacted] APT load information used.
  - [redacted] APT selected load date: [redacted]
  - [redacted] APT actual load on [redacted]: [redacted]A ➔ [redacted]A
  - [redacted] APT WA on selected load date: [redacted]
  - [redacted] WA load: [redacted]A➔ [redacted]A

- [redacted] ([redacted]) APT load information used.
  - [redacted] APT selected load date: [redacted]
  - [redacted] APT actual load on [redacted]: [redacted]A ➔ [redacted]A
  - [redacted]-TR1 APT WA on selected load date: [redacted]
  - [redacted] WA load: [redacted]A➔ [redacted]A

- [redacted] load allocation method
  - Validate in the CYME model all transformers, ESS loads, including [redacted] [redacted]kVA for each feeding line at [redacted] per Cedar meter information.
  - Open section 402568999, identified as zero point in addition to [redacted]A of [redacted] load being supported by feeder [redacted]. This allowed for proper load allocation on the two feeders.
  - Enter feeder loads: [redacted]A for [redacted] (Avg. WA [redacted]A plus the [redacted] A contributed to [redacted]) and [redacted]A for [redacted] (Avg. WA [redacted]A minus the [redacted]A supported from [redacted]). Power factor of [redacted]% for [redacted] and [redacted]% for [redacted] were used during allocation.
  - Ignore motors.
  - Open zero-point switch and allocate the loads.
  - Close zero-point switch and run analysis.

- Physical midpoint on feeder [redacted] is taken at section 290677092; and the endpoint is taken at section 402568684.

- Physical midpoint on feeder [redacted] is taken at section 402570789; and the endpoint is taken at section 402568677.

CONFIDENTIAL AND PROPRIETARY - CEII

EEE - SUBSTATION

F CTA CYME Study Results

Scenario	@ CTA / Metra -Connection #1 (MVA)	@ CTA / Metra - Connection #2 (MVA)	@ ComEd - Circuit #1 (MVA)	@ ComEd - Circuit #2 (MVA)	@ CTA / Metra - Connection #1 (kV)	@ CTA / Metra - Connection #2 (kV)	@ ComEd - Circuit #1 (kV)	@ ComEd - Circuit #2 (kV)
1	-2.2	1.6	5.7	5.4	12.2	12.2	12.4	12.4
2	0	-0.7	0	7.7	0	12.1	0	12.4
3	0	-0.7	3.5	7.7	12.3	12.1	12.4	12.4
4	-0.7	0	4.2	0	12.3	0	12.4	0
5	-0.7	0	4.2	7	12.3	12.2	12.4	12.4
6	3.5	-4.2	0	11.5	11.9	11.9	11.8	12.3
7	-7.5	6.8	11.5	0	11.9	11.9	12.3	11.9
8	-1.1	0.8	7.6	6.9	12.1	12.1	12.4	12.4

KV

F CTA Cyme Results Comparison

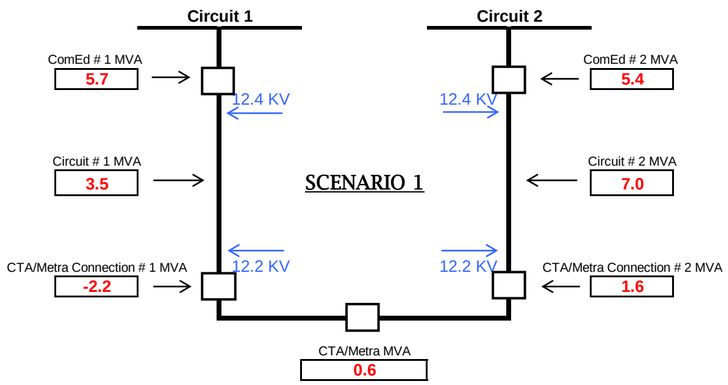

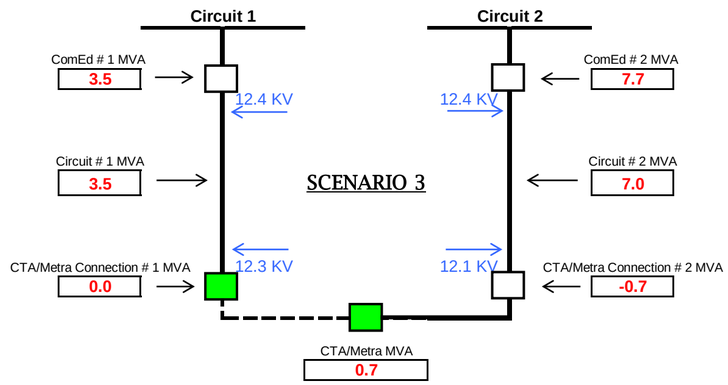

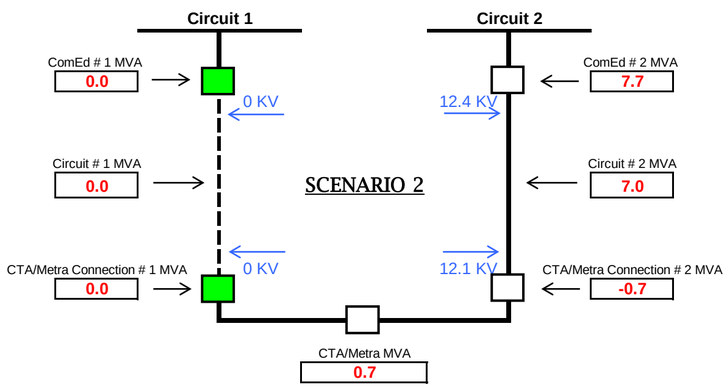

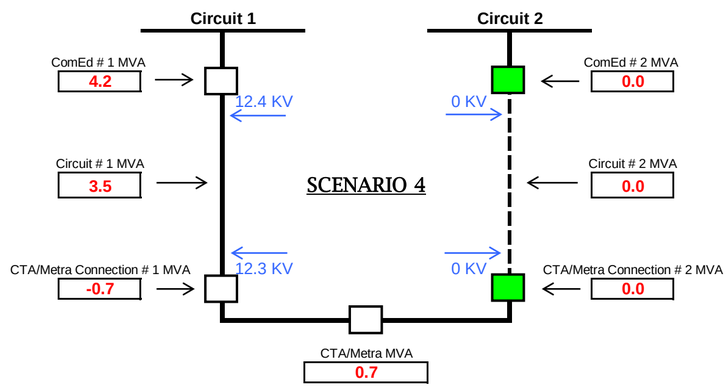

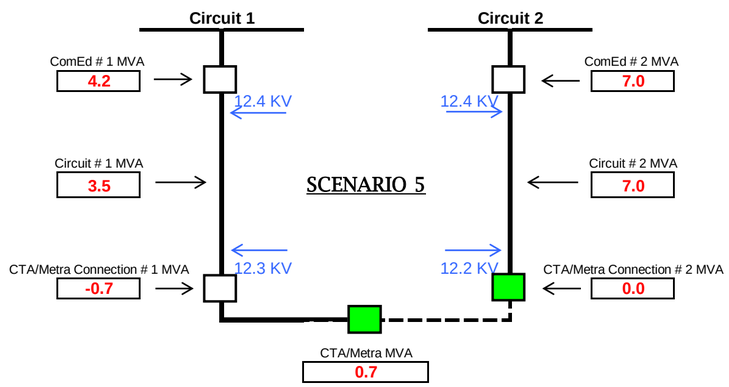
Circuit 1
Circuit 2
ComEd # 1 MVA
4.2
12.4 KV
12.4 KV
ComEd # 2 MVA
7.0
Circuit # 1 MVA
3.5
SCENARIO 5
Circuit # 2 MVA
7.0
CTA/Metra Connection # 1 MVA
-0.7
12.3 KV
12.2 KV
CTA/Metra Connection # 2 MVA
0.0
CTA/Metra MVA
0.7

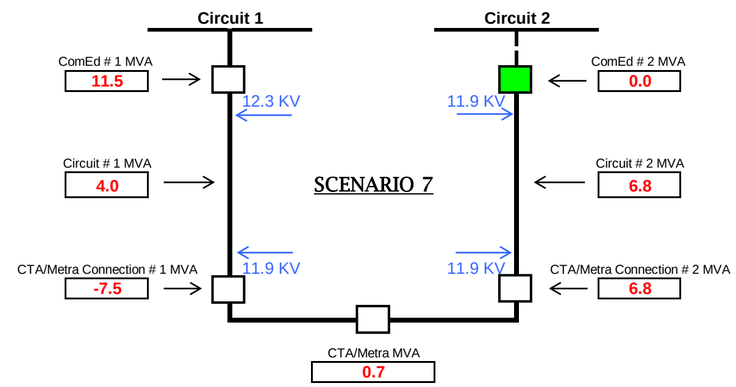
Circuit 1
Circuit 2
ComEd # 1 MVA
11.5
12.3 KV
11.9 KV
ComEd # 2 MVA
0.0
Circuit # 1 MVA
4.0
SCENARIO 7
Circuit # 2 MVA
6.8
CTA/Metra Connection # 1 MVA
-7.5
11.9 KV
11.9 KV
CTA/Metra Connection # 2 MVA
6.8
CTA/Metra MVA
0.7

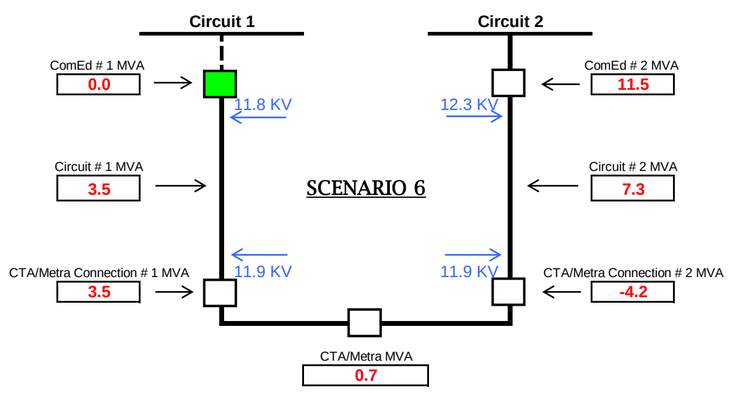
Circuit 1
Circuit 2
ComEd # 1 MVA
0.0
11.8 KV
12.3 KV
ComEd # 2 MVA
11.5
Circuit # 1 MVA
3.5
SCENARIO 6
Circuit # 2 MVA
7.3
CTA/Metra Connection # 1 MVA
3.5
11.9 KV
11.9 KV
CTA/Metra Connection # 2 MVA
-4.2
CTA/Metra MVA
0.7

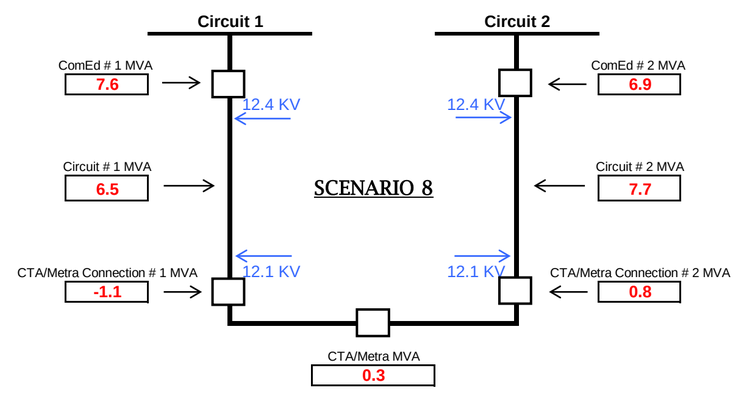
Circuit 1
Circuit 2
ComEd # 1 MVA
7.6
12.4 KV
12.4 KV
ComEd # 2 MVA
6.9
Circuit # 1 MVA
6.5
SCENARIO 8
Circuit # 2 MVA
7.7
CTA/Metra Connection # 1 MVA
-1.1
12.1 KV
12.1 KV
CTA/Metra Connection # 2 MVA
0.8
CTA/Metra MVA
0.3

F CTA CYME Study Information

- [redacted], [redacted], [redacted], assumed load demand [redacted] KW, PF=[redacted] based [redacted] data ([redacted]). Reading obtained from [redacted].
- [redacted], [redacted], [redacted], assumed load demand [redacted] KW, PF=[redacted] based [redacted] data. Reading obtained from [redacted] [redacted]).
- [redacted], [redacted]., [redacted]., assumed load demand [redacted] KW, PF=[redacted] based [redacted] data. Listed as primary transformer [redacted] under [redacted].
- [redacted] substation load was obtained from Cedar Loads. Peak load for each feeding line is [redacted] with assumed PF=[redacted].
- [redacted] APT load information used.
  - [redacted] APT selected load date [redacted]
  - [redacted] APT actual load on [redacted] / [redacted] / [redacted] ➔ [redacted]
  - [redacted] APT WA on selected load date: [redacted]
  - [redacted] WA load: [redacted] / [redacted] / [redacted] ➔ [redacted]
- [redacted] APT load information used.
  - [redacted] APT selected load date: [redacted]
  - [redacted] APT actual load on [redacted]: [redacted] / [redacted] / [redacted] ➔ [redacted]
  - [redacted] APT WA on selected load date: [redacted]
  - [redacted] WA load: [redacted] / [redacted] / [redacted] ➔ [redacted]
- [redacted] APT load information used.
  - [redacted] APT selected load date: [redacted]
  - [redacted] APT actual load on [redacted]: [redacted] / [redacted] / [redacted] ➔ [redacted]
  - [redacted] APT WA on selected load date: [redacted]
  - [redacted] WA load: [redacted] / [redacted] / [redacted] ➔ [redacted]
- [redacted] load allocation method
  - Validate in the CYME model all transformers, ESS loads, including [redacted] for each feeding line at [redacted] per Cedar meter information.
  - Zero point was identified on the feeder [redacted] outside the substation [redacted]. Feeder [redacted] supports both spot loads inside the substation as well as supplies [redacted] to [redacted].
  - Enter feeder loads: [redacted] **for** [redacted] (Avg WA [redacted] minus the [redacted] contributed to [redacted]) and [redacted] **for** [redacted] (Avg WA [redacted] plus the [redacted] supported from [redacted]). [redacted] **for** [redacted]
  - Power factor of [redacted] for [redacted] and [redacted]; and [redacted]% for [redacted] were used during allocation so as to obtain an adjusted load PF of [redacted] – [redacted] % on feeders.
  - Ignore motors.

- Open Breaker at [redacted] on the feeder [redacted] (zero-point) and allocate the loads.
- Close Breaker at [redacted] on the feeder [redacted] (zero-point) and run analysis.

- Physical midpoint on feeder [redacted] is taken at cable next to [redacted] and the endpoint is taken at cable after [redacted].
- Physical midpoint on feeder [redacted] is taken at cable next to [redacted]; and the endpoint is taken at cable after [redacted].

F CTA CYME Study Results

Scenario	@ CTA -Connection #1 (MVA)	@ CTA - Connection #2 (MVA)	@ ComEd - Circuit #1 (MVA)	@ ComEd - Circuit #2 (MVA)	@ CTA -Connection #1 (kV)	@ CTA - Connection #2 (kV)	@ ComEd - Circuit #1 (kV)	@ ComEd - Circuit #2 (kV)	@ ComEd - Circuit #1 Midpoint (kV)	@ ComEd - Circuit #2 Midpoint (kV)	@ ComEd - Circuit #1 Endpoint (kV)	@ ComEd - Circuit #2 Endpoint (kV)
1	-2.2	+1.6	+5.7	+5.4	12.2	12.2	12.4	12.4	12.3	12.3	12.2	12.0
2	0.0	-0.7	0.0	+7.7	0.0	12.1	0.0	12.4	0.0	12.2	0.0	12.0
3	0.0	-0.7	+3.5	+7.7	12.3	12.1	12.4	12.4	12.3	12.2	12.3	12.0
4	-0.7	0.0	+4.2	0.0	12.3	0.0	12.4	0.0	12.3	0.0	12.2	0.0
5	-0.7	0.0	+4.2	+7.0	12.3	12.2	12.4	12.4	12.3	12.2	12.2	12.0
6	+3.5	-4.2	0.0	+11.5	11.9	11.9	11.8	12.3	11.8	11.9	11.8	11.7
7	-7.5	+6.8	+11.5	0.0	11.9	11.9	12.3	11.9	12.0	11.9	11.9	11.7
8	-1.1	+0.8	+7.6	+6.9	12.1	12.1	12.4	12.4	12.2	12.2	12.1	11.9

Scenario:

Scenario 1: @ CTA/Metra connection #1 and #2 closed, @ ComEd circuit #1 and #2 closed. This represents the normal condition.

Scenario 2: @ CTA/Metra connection #1 open and #2 closed, @ ComEd circuit #1 open and #2 closed. This represents an outage of ComEd circuit #1.

Scenario 3: @ CTA/Metra connection #1 and bus tie open and #2 closed, @ ComEd circuit #1 and #2 closed. This represents an outage of CTA/Metra Bus #1.

Scenario 4: @ CTA/Metra connection #1 closed and #2 open, @ ComEd circuit #1 closed and #2 open. This represents an outage of ComEd circuit #2.

Scenario 5: @ CTA/Metra connection #1 closed and #2 and bus tie open, @ ComEd circuit #1 and #2 closed. This represents an outage of CTA/Metra Bus #2.

Scenario 6: @ CTA/Metra connection #1 and #2 closed, @ ComEd circuit #1 open and #2 closed. This represents loss of source for ComEd circuit #1.

Scenario 7: @ CTA/Metra connection #1 and #2 closed, @ ComEd circuit #1 closed and #2 open. This represents loss of source for ComEd circuit #2.

Scenario 8: @ CTA/Metra connection #1 and #2 closed, @ ComEd circuit #1 and #2 closed. Close devices [redacted] #[redacted], #[redacted] and open devices [redacted], #[redacted], [redacted]. This represents outage on feeder [redacted] with loads transferred to [redacted]

CONFIDENTIAL AND PROPRIETARY - CEII

F SUBSTATION

FF CYME Study Results

Scenario	@ CTA / Metra Connection #1 (MVA)	@ CTA / Metra - Connection #2 (MVA)	@ ComEd - Circuit #1 (MVA)	@ ComEd - Circuit #2 (MVA)	@ CTA / Metra - Connection #1 (kV)	@ CTA / Metra - Connection #2 (kV)	@ ComEd - Circuit #1 (kV)	@ ComEd - Circuit #2 (kV)
1	-5.2	-0.2	5.4	5.6	12.3	12.3	12.5	12.5
2	0	-5.4	0	11	0	12.2	0	12.5
3	0	-5.4	0	11	12.5	12.2	12.5	12.5
4	-5.4	0	5.6	0	12.3	0	12.5	0
5	-5.4	0	5.6	5.4	12.3	12.3	12.5	12.5
6	0	-5.5	0	11.1	12.2	12.2	12.2	12.5
7	-10.8	5.3	11.2	0	12.2	12.1	12.5	12.1
8								

FF CYME Results Comparison

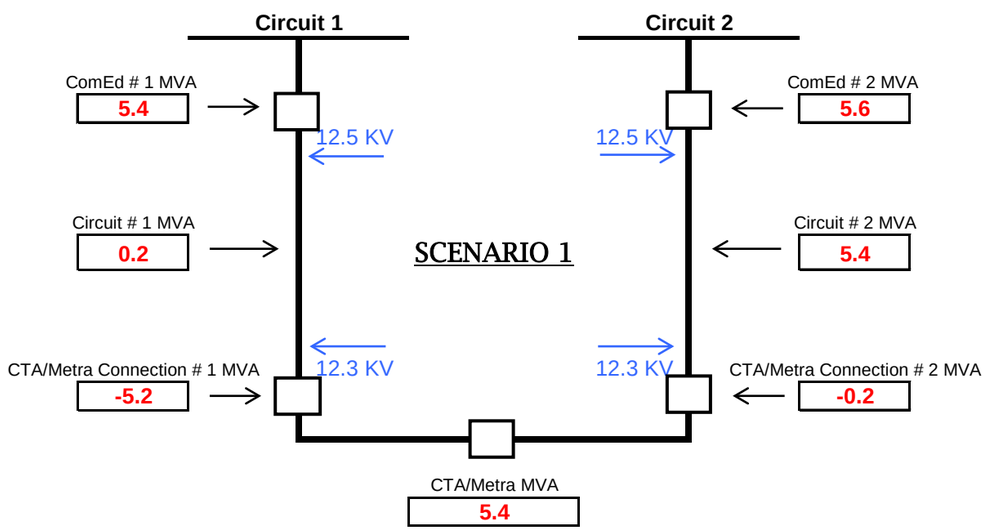

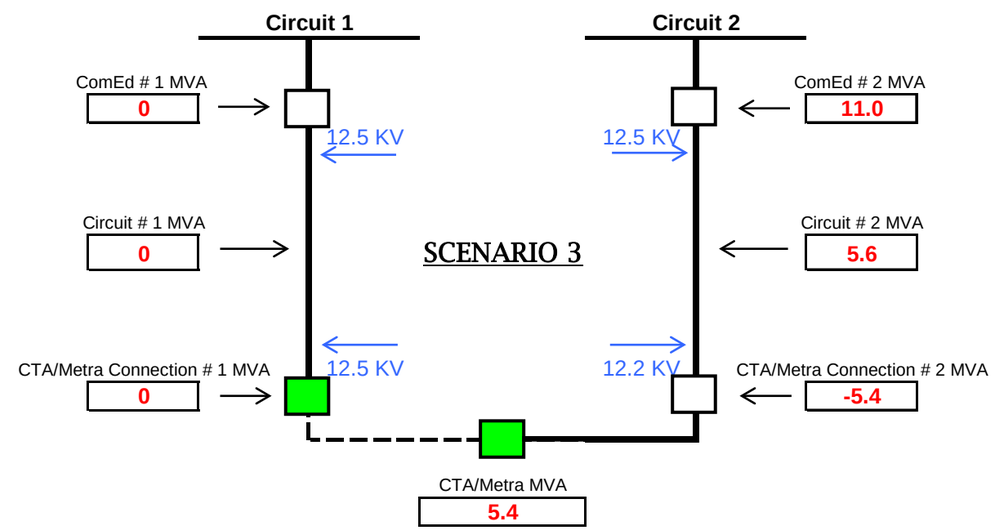

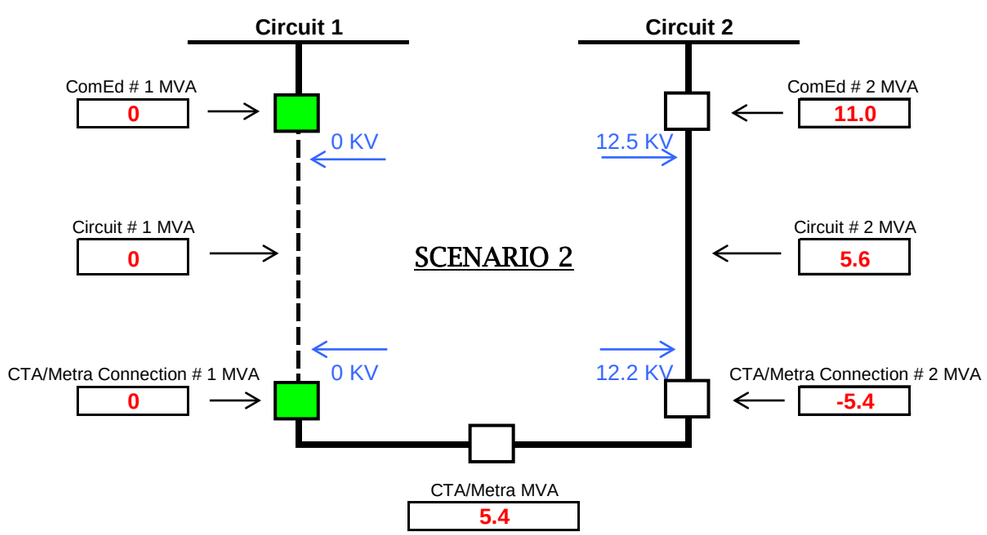

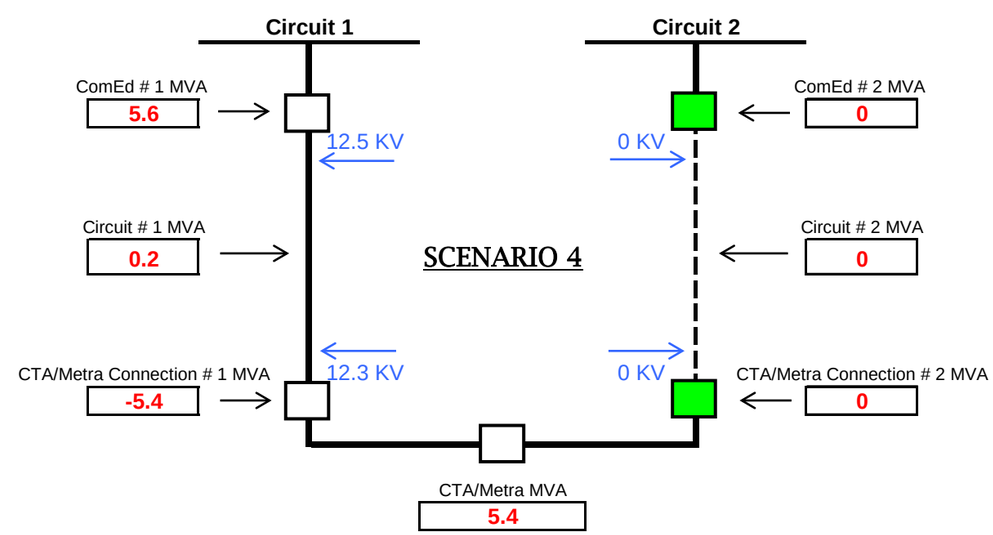

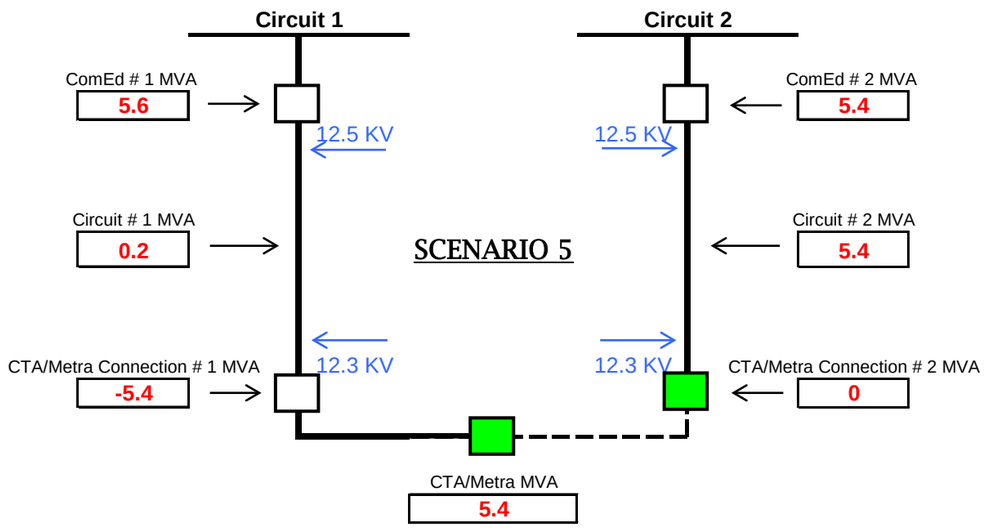
Circuit 1
Circuit 2
ComEd # 1 MVA
5.6
12.5 KV
12.5 KV
ComEd # 2 MVA
5.4
Circuit # 1 MVA
0.2
SCENARIO 5
Circuit # 2 MVA
5.4
CTA/Metra Connection # 1 MVA
-5.4
12.3 KV
12.3 KV
CTA/Metra Connection # 2 MVA
0
CTA/Metra MVA
5.4

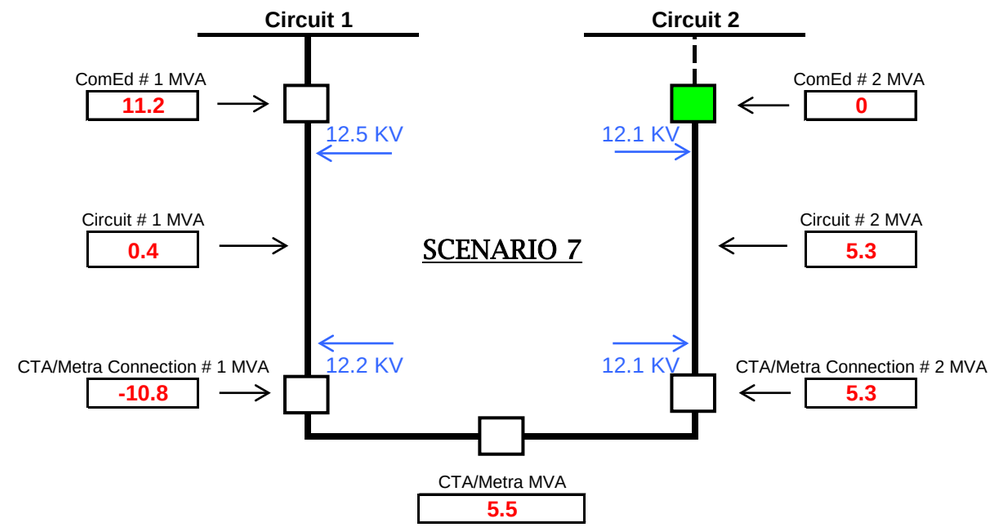
Circuit 1
Circuit 2
ComEd # 1 MVA
11.2
12.5 KV
12.1 KV
ComEd # 2 MVA
0
Circuit # 1 MVA
0.4
SCENARIO 7
Circuit # 2 MVA
5.3
CTA/Metra Connection # 1 MVA
-10.8
12.2 KV
12.1 KV
CTA/Metra Connection # 2 MVA
5.3
CTA/Metra MVA
5.5

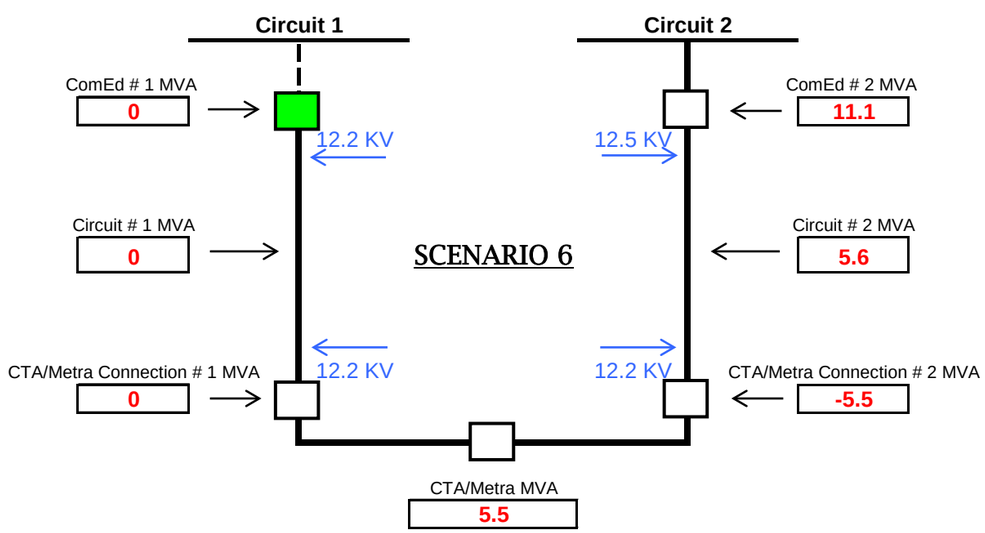
Circuit 1
Circuit 2
ComEd # 1 MVA
0
12.2 KV
12.5 KV
ComEd # 2 MVA
11.1
Circuit # 1 MVA
0
SCENARIO 6
Circuit # 2 MVA
5.6
CTA/Metra Connection # 1 MVA
0
12.2 KV
12.2 KV
CTA/Metra Connection # 2 MVA
-5.5
CTA/Metra MVA
5.5

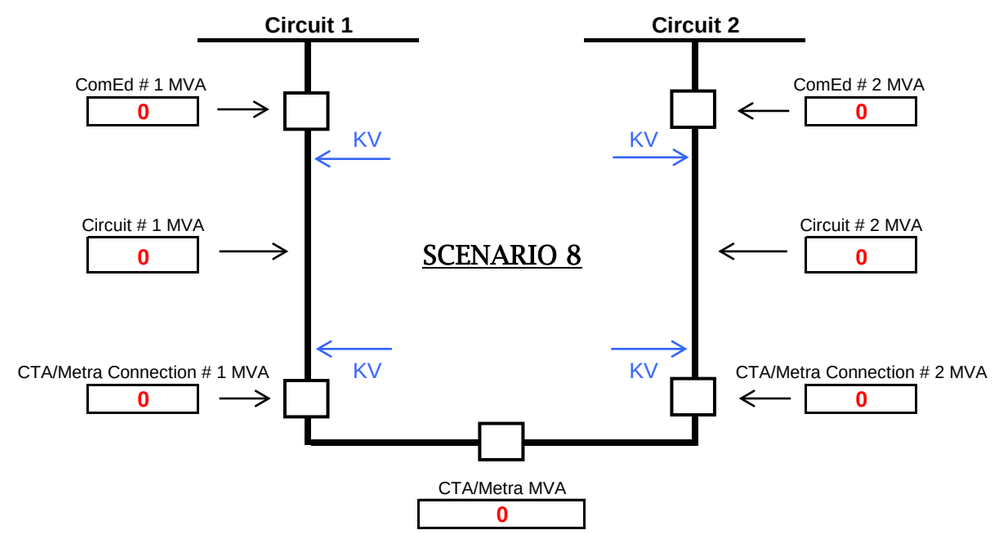
Circuit 1
Circuit 2
ComEd # 1 MVA
0
KV
KV
ComEd # 2 MVA
0
Circuit # 1 MVA
0
SCENARIO 8
Circuit # 2 MVA
0
CTA/Metra Connection # 1 MVA
0
KV
KV
CTA/Metra Connection # 2 MVA
0
CTA/Metra MVA
0

FF CYME Study Information

- Loads for all ESS / CTL were assumed according to proportional distribution of APT load information (proportional to nameplate ratings of all transformers). Loads assumed at PF=[redacted].

- [redacted] CTA ([redacted]) substation load was obtained from Cedar Loads. Peak load for each feeding line is [redacted] KVA with assumed PF=[redacted].

- [redacted] APT load information used.
  - [redacted] APT selected load date: [redacted]
  - [redacted] APT actual load on [redacted] ➔ [redacted]
  - [redacted] APT WA on selected load date: [redacted]
  - [redacted] WA load: [redacted] ➔ [redacted]

- [redacted] APT load information used.
  - [redacted] APT selected load date: [redacted]
  - [redacted] APT actual load on [redacted] ➔ [redacted]
  - [redacted] APT WA on selected load date: [redacted]
  - [redacted] WA load: [redacted] ➔ [redacted]

- [redacted] load allocation method
  - Validate in the CYME model all transformers, ESS loads, including [redacted] KVA for each feeding line per Cedar meter information.
  - [redacted] line breaker at [redacted] is identified as the first zero point where [redacted] is supported by feeder [redacted] to the load on the feeder [redacted]. Line This allowed for proper load allocation on the two feeders.
  - Enter feeder loads: [redacted] **for** [redacted] (Avg WA [redacted] plus the [redacted] contributed to [redacted])
  - Enter feeder loads: [redacted] **for** [redacted] (Avg WA [redacted] minus the [redacted] supported from [redacted]).
  - Power factor of [redacted] for [redacted] and [redacted] for [redacted] were used during allocation.
  - Ignore motors.
  - Open zero-point switch and allocate the loads.
  - Close zero-point switch and run analysis.

- Physical midpoint on feeder [redacted] is taken at cable section CYMDIST # 340617470; and the endpoint is taken at cable inside [redacted].

- Physical midpoint on feeder [redacted] is taken at cable section CYMDIST # 106561253; and the endpoint is taken at cable section CYMDIST # 340385494.

FF CYME Study Results

Scenario	@ CTA -Connection #1 (MVA)	@ CTA - Connection #2 (MVA)	@ ComEd - Circuit #1 (MVA)	@ ComEd - Circuit #2 (MVA)	@ CTA -Connection #1 (kV)	@ CTA - Connection #2 (kV)	@ ComEd - Circuit #1 (kV)	@ ComEd - Circuit #2 (kV)	@ ComEd - Circuit #1 Midpoint (kV)	@ ComEd - Circuit #2 Midpoint (kV)	@ ComEd - Circuit #1 Endpoint (kV)	@ ComEd - Circuit #2 Endpoint (kV)
1	-5.2	-.2	5.4	5.6	12.3	12.3	12.5	12.5	12.4	12.4	12.3	12.3
2	0	-5.4	0	11	0	12.2	0	12.5	0	12.2	0	12.2
3	0	-5.4	0	11	12.5	12.2	12.5	12.5	12.5	12.2	12.5	12.2
4	-5.4	0	5.6	0	12.3	0	12.5	0	12.4	0	12.3	0
5	-5.4	0	5.6	5.4	12.3	12.3	12.5	12.5	12.4	12.4	12.3	12.3
6	0	-5.5	0	11.1	12.2	12.2	12.2	12.5	12.2	12.2	12.2	12.2
7	-10.8	5.3	11.2	0	12.2	12.1	12.5	12.1	12.2	12.1	12.2	12.1

Scenario:

Scenario 1: @ CTA connection #1 and #2 closed, @ ComEd circuit #1 and #2 closed. This represents the normal condition.

Scenario 2: @ CTA connection #1 open and #2 closed, @ ComEd circuit #1 open and #2 closed. This represents an outage of ComEd circuit #1.

Scenario 3: @ CTA connection #1 and bus tie open and #2 closed, @ ComEd circuit #1 and #2 closed. This represents an outage of CTA Bus #1.

Scenario 4: @ CTA connection #1 closed and #2 open, @ ComEd circuit #1 closed and #2 open. This represents an outage of ComEd circuit #2.

Scenario 5: @ CTA connection #1 closed and #2 and bus tie open, @ ComEd circuit #1 and #2 closed. This represents an outage of CTA Bus #2.

Scenario 6: @ CTA connection #1 and #2 closed, @ ComEd circuit #1 open and #2 closed. This represents loss of source for ComEd circuit #1.

Scenario 7: @ CTA connection #1 and #2 closed, @ ComEd circuit #1 closed and #2 open. This represents loss of source for ComEd circuit #2.

CONFIDENTIAL AND PROPRIETARY - CEII

FF SUBSTATION

FFF CYME Study Results

Scenario	@ CTA / Metra - Connection #1 (MVA)	@ CTA / Metra - Connection #2 (MVA)	@ ComEd - Circuit #1 (MVA)	@ ComEd - Circuit #2 (MVA)	@ CTA / Metra - Connection #1 (kV)	@ CTA / Metra - Connection #2 (kV)	@ ComEd - Circuit #1 (kV)	@ ComEd - Circuit #2 (kV)
1	-2.3	1.5	4.3	4.4	12.4	12.4	12.5	12.5
2	0.0	-0.7	0.0	6.7	0.0	12.3	0.0	12.4
3	0.0	-0.7	2.1	6.7	12.5	12.3	12.5	12.4
4	-0.7	0.0	2.8	0.0	12.4	0.0	12.5	0.0
5	-0.7	0.0	2.8	6.0	12.4	12.4	12.5	12.5
6	2.1	-2.8	0.0	8.8	12.3	12.3	12.3	12.4
7	-6.7	5.9	8.8	0.0	12.3	12.3	12.4	12.3

FFF CYME Results Comparison

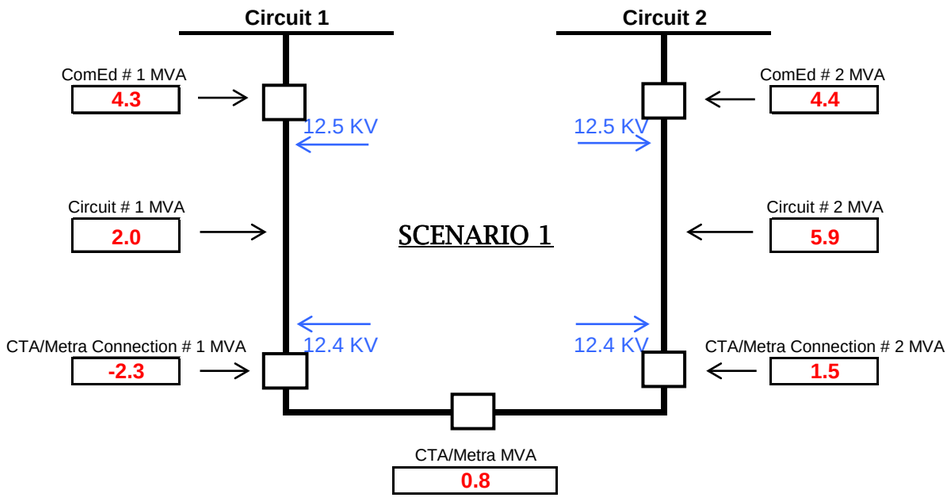

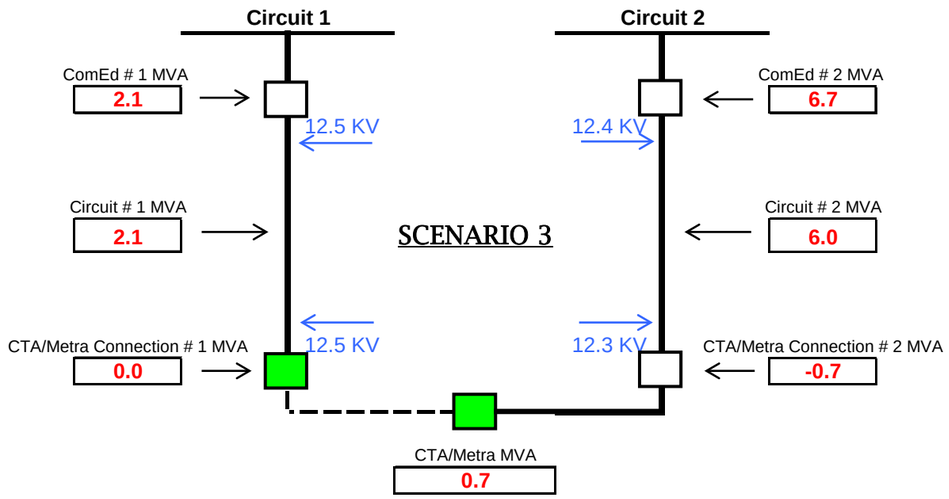

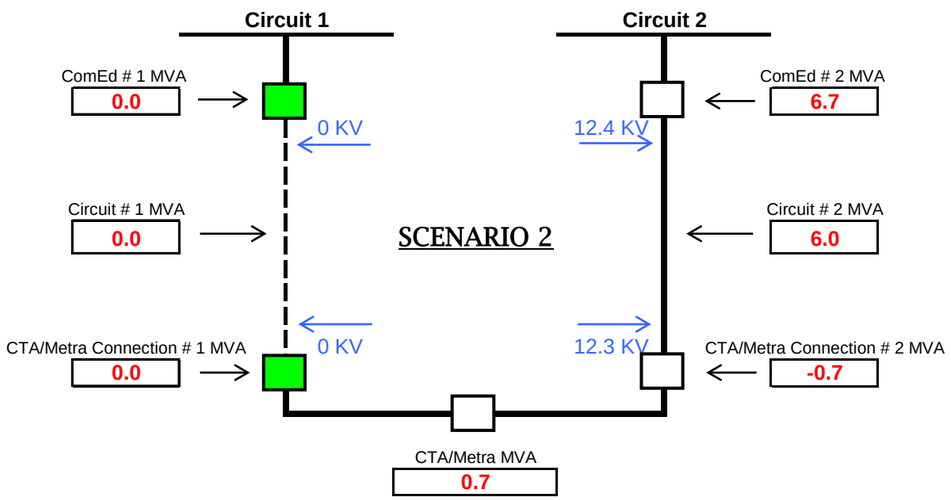

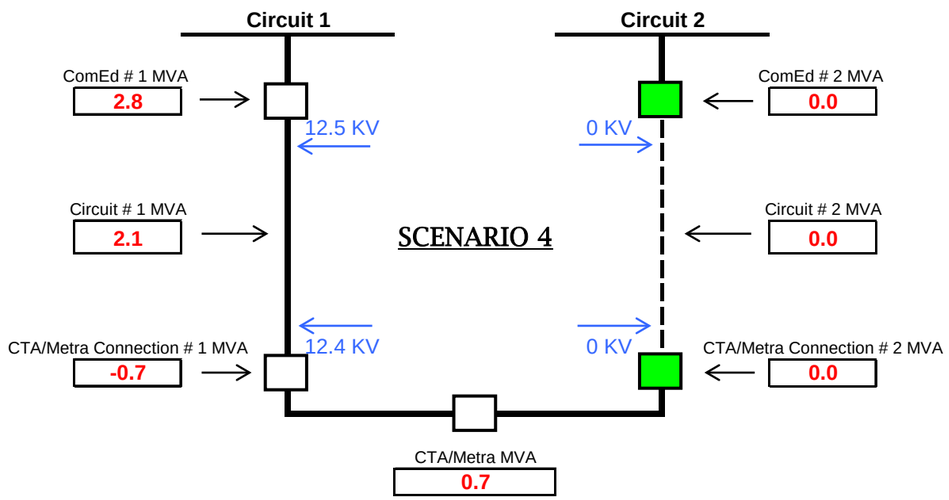

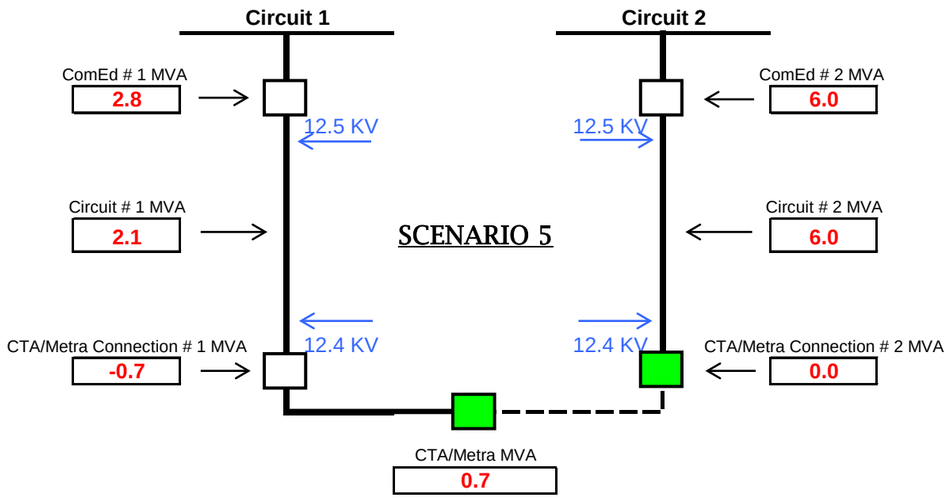
Circuit 1
Circuit 2
ComEd # 1 MVA
2.8
12.5 KV
12.5 KV
ComEd # 2 MVA
6.0
Circuit # 1 MVA
2.1
SCENARIO 5
Circuit # 2 MVA
6.0
12.4 KV
12.4 KV
CTA/Metra Connection # 1 MVA
-0.7
CTA/Metra Connection # 2 MVA
0.0
CTA/Metra MVA
0.7

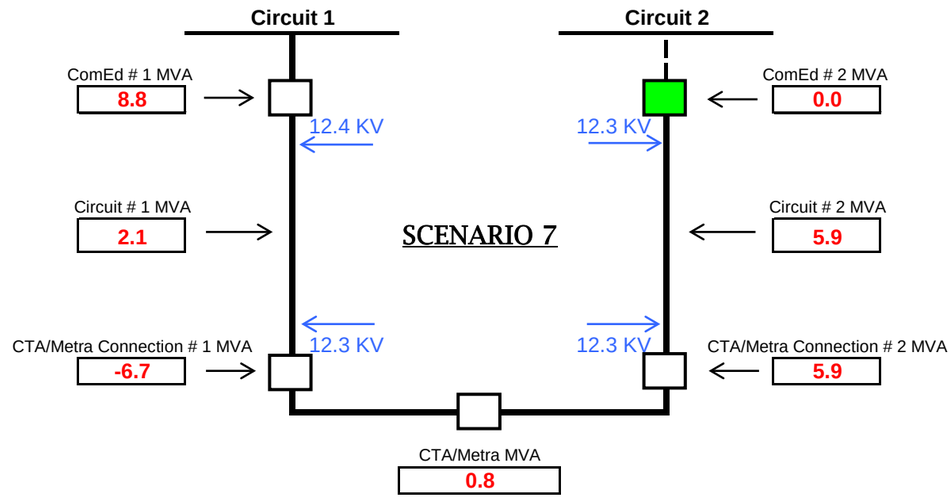
Circuit 1
Circuit 2
ComEd # 1 MVA
8.8
12.4 KV
12.3 KV
ComEd # 2 MVA
0.0
Circuit # 1 MVA
2.1
SCENARIO 7
Circuit # 2 MVA
5.9
12.3 KV
12.3 KV
CTA/Metra Connection # 1 MVA
-6.7
CTA/Metra Connection # 2 MVA
5.9
CTA/Metra MVA
0.8

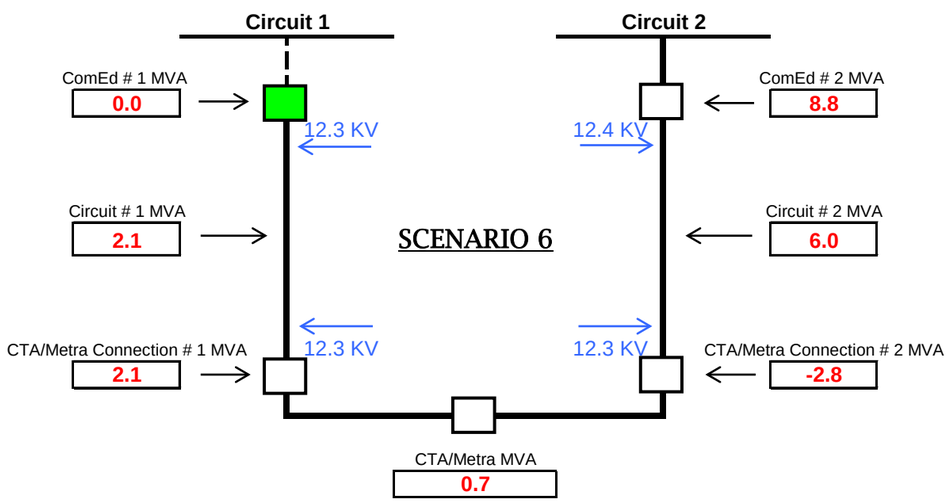
Circuit 1
Circuit 2
ComEd # 1 MVA
0.0
12.3 KV
12.4 KV
ComEd # 2 MVA
8.8
Circuit # 1 MVA
2.1
SCENARIO 6
Circuit # 2 MVA
6.0
12.3 KV
12.3 KV
CTA/Metra Connection # 1 MVA
2.1
CTA/Metra Connection # 2 MVA
-2.8
CTA/Metra MVA
0.7

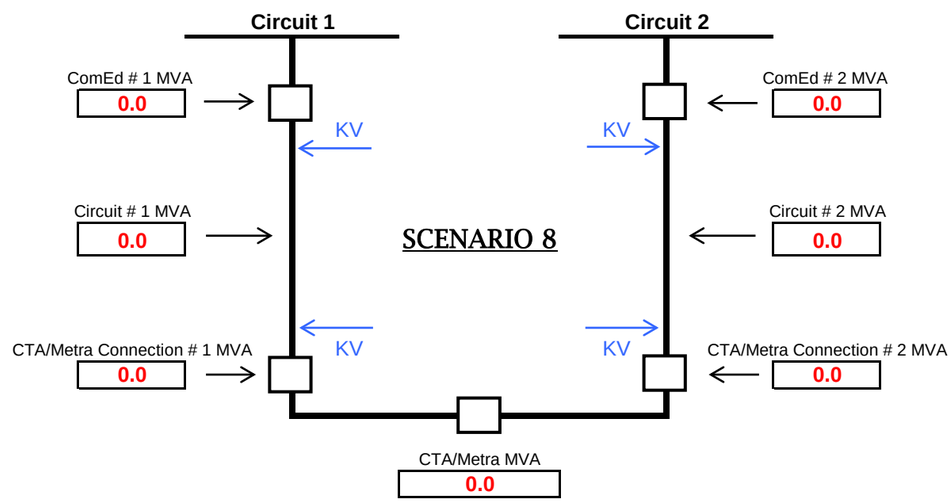
Circuit 1
Circuit 2
ComEd # 1 MVA
0.0
KV
KV
ComEd # 2 MVA
0.0
Circuit # 1 MVA
0.0
SCENARIO 8
Circuit # 2 MVA
0.0
KV
KV
CTA/Metra Connection # 1 MVA
0.0
CTA/Metra Connection # 2 MVA
0.0
CTA/Metra MVA
0.0

FFF- CYME Study Information

- Added the following load demand for [redacted], [redacted], assumed at PF=[redacted]
  - [redacted] = [redacted] (best est)

- [redacted]) substation load was obtained from Cedar Loads. Peak load for each feeding line is [redacted]KW with assumed PF=[redacted]

- [redacted] APT load information used.
  - [redacted] APT selected load date: [redacted]
  - [redacted] APT actual load on [redacted]: [redacted] ➔ [redacted]
  - [redacted] APT WA on selected load date: [redacted] WA load: [redacted] ➔ [redacted]

- [redacted] APT load information used.
  - [redacted] APT selected load date: [redacted]
  - [redacted] APT actual load on [redacted]: [redacted] ➔ [redacted]
  - [redacted] APT WA on selected load date: [redacted]
  - [redacted] WA load: [redacted] ➔ [redacted]

- [redacted]load allocation method
  - Validate in the CYME model all transformers, ESS loads, including [redacted] for each feeding line at [redacted] per Cedar meter information.
  - Inserted switch on section [redacted]1 at the point where feeder [redacted] and [redacted] converge. [redacted] supports [redacted] avg. to loads on the [redacted] feeder network (i.e., assumed zero point of the network). This allowed for proper load allocation on the feeders.
  - Enter feeder loads: [redacted] **for** [redacted] (WA [redacted], [redacted]=[redacted]=Bph, [redacted] difference to [redacted]); [redacted] **for** [redacted] (WA [redacted]=[redacted]Aph, [redacted] Bph, [redacted]Cph for [redacted] (load from [redacted])
  - Power factor of [redacted] for [redacted] and [redacted] for [redacted] were used during allocation so as to obtain an adjusted load PF of [redacted]% on all feeders.
  - Ignore motors.

- Physical midpoint on feeder [redacted] is taken at cable section # 191524813 and the endpoint is taken at cable section # 437072187.

- Physical midpoint on feeder [redacted] is taken at cable section # 1076194383 and the endpoint is taken at ovhd section # 288569003.

FFF CYME Study Results

Scenario	@ CTA -Connection #1 (MVA)	@ CTA - Connection #2 (MVA)	@ ComEd - Circuit #1 (MVA)	@ ComEd - Circuit #2 (MVA)	@ CTA -Connection #1 (kV)	@ CTA - Connection #2 (kV)	@ ComEd - Circuit #1 (kV)	@ ComEd - Circuit #2 (kV)	@ ComEd - Circuit #1 Midpoint (kV)	@ ComEd - Circuit #2 Midpoint (kV)	@ ComEd - Circuit #1 Endpoint (kV)	@ ComEd - Circuit #2 Endpoint (kV)
1	-2.3	1.5	4.3	4.4	12.4	12.4	12.5	12.5	12.4	12.4	12.4	12.3
2	0.0	-0.7	0.0	6.7	0.0	12.3	0.0	12.4	0.0	12.3	0.0	12.3
3	0.0	-0.7	2.1	6.7	12.5	12.3	12.5	12.4	12.5	12.3	12.5	12.3
4	-0.7	0.0	2.8	0.0	12.4	0.0	12.5	0.0	12.4	0.0	12.4	0.0
5	-0.7	0.0	2.8	6.0	12.4	12.4	12.5	12.5	12.4	12.3	12.4	12.3
6	2.1	-2.8	0.0	8.8	12.3	12.3	12.3	12.4	12.3	12.2	12.3	12.2
7	-6.7	5.9	8.8	0.0	12.3	12.3	12.4	12.3	12.4	12.2	12.3	12.2

Scenario:

Scenario 1: @ CTA connection #1 and #2 closed, @ ComEd circuit #1 and #2 closed. This represents the normal condition.

Scenario 2: @ CTA connection #1 open and #2 closed, @ ComEd circuit #1 open and #2 closed. This represents an outage of ComEd circuit #1.

Scenario 3: @ CTA connection #1 and bus tie open and #2 closed, @ ComEd circuit #1 and #2 closed. This represents an outage of CTA Bus #1.

Scenario 4: @ CTA connection #1 closed and #2 open, @ ComEd circuit #1 closed and #2 open. This represents an outage of ComEd circuit #2.

Scenario 5: @ CTA connection #1 closed and #2 and bus tie open, @ ComEd circuit #1 and #2 closed. This represents an outage of CTA Bus #2.

Scenario 6: @ CTA connection #1 and #2 closed, @ ComEd circuit #1 open and #2 closed. This represents loss of source for ComEd circuit #1.

Scenario 7: @ CTA connection #1 and #2 closed, @ ComEd circuit #1 closed and #2 open. This represents loss of source for ComEd circuit #2.

CONFIDENTIAL AND PROPRIETARY - CEII

FFF SUBSTATION

G-R CYME Study Information

- [redacted] has customer listed in SBT [redacted] but load did not come on line until after summer of [redacted]

- Customers for [redacted] are still tied to [redacted]. Additional [redacted] summer reading from passport report for [redacted] added to [redacted]

- [redacted] kVA summer reading added to [redacted] reading due to customers address location.

- [redacted] substation load was obtained from Cedar Loads. Peak load for each feeding line is [redacted] with assumed [redacted]

- [redacted] substation load was obtained from Cedar Loads. Peak load for each feeding line is [redacted] with assumed [redacted]

- [redacted] APT load information used.
  - [redacted] APT selected load date: [redacted]
  - [redacted] APT actual load on [redacted]
  - [redacted] APT WA on selected load date: [redacted]
  - [redacted] WA load: [redacted]

- [redacted] APT load information used.
  - [redacted] APT selected load date: [redacted]
  - [redacted] APT actual load on [redacted]
  - [redacted] APT WA on selected load date: [redacted]
  - [redacted] WA load: [redacted]

- [redacted] load allocation method
  - Validate in the CYME model all transformers, ESS loads, including [redacted] for each feeding line at [redacted] and [redacted] for each feeding line at [redacted] per CEDAR
  - Zero point identified inside [redacted] immediately north of [redacted]
  - Enter feeder loads: [redacted]
  - Ignore motors
  - Open zero-point switch and allocate the loads.
  - Adjust pf at source [redacted] and allocate to obtain an adjusted load PF [redacted]
  - Close [redacted] and run analysis.

- [redacted] midpoint KV taken at cable section 1029564353 and endpoint KV taken at section [redacted].

- [redacted] midpoint KV taken at cable section 670605694 and endpoint KV taken at section. 364046931.

GG CTA- CYME Study Results

Scenario	@ CTA / Metra -Connection #1 (MVA)	@ CTA / Metra - Connection #2 (MVA)	@ ComEd - Circuit #1 (MVA)	@ ComEd - Circuit #2 (MVA)	@ CTA / Metra - Connection #1 (kV)	@ CTA / Metra - Connection #2 (kV)	@ ComEd - Circuit #1 (kV)	@ ComEd - Circuit #2 (kV)
1	-2.5	0.2	5.4	6.3	12.3	12.3	12.5	12.5
2	0.0	-2.4	0.0	8.9	0.0	12.2	0.0	12.5
3	0.0	-2.4	2.9	8.9	12.5	12.2	12.5	12.5
4	-2.4	0.0	5.3	0.0	12.3	0.0	12.5	0.0
5	-2.4	0.0	5.3	6.4	12.3	12.3	12.5	12.5
6	2.8	-5.1	0.0	11.7	12.1	12.1	12.1	12.5
7	-8.6	6.2	11.7	0.0	12.0	12.0	12.5	12.0
8								

KV

GG CTA Cyme Results Comparison

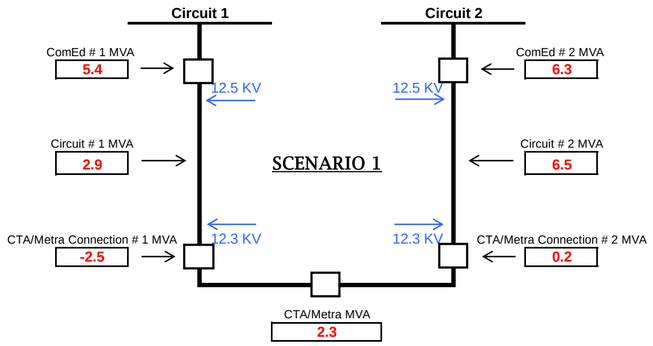

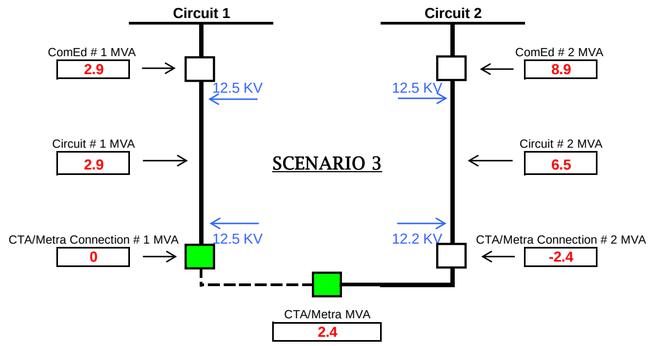

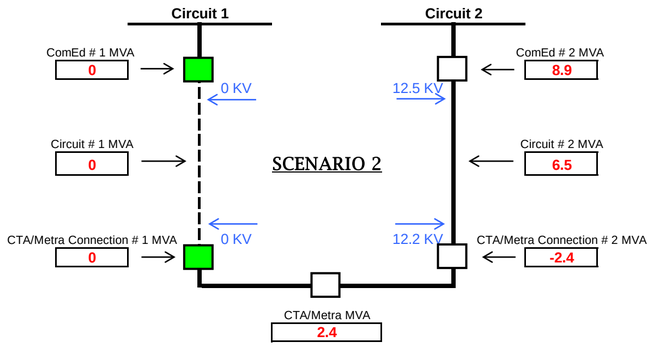

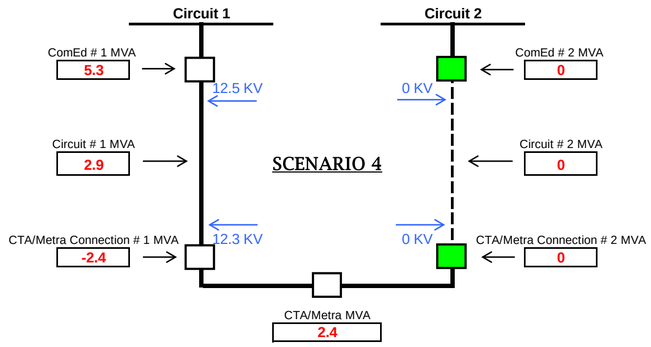

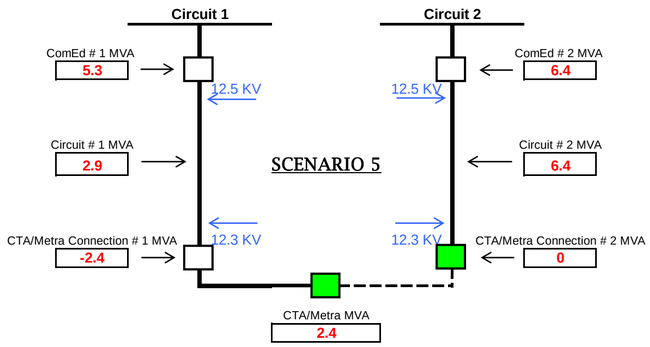
Circuit 1
Circuit 2
ComEd # 1 MVA
5.3
12.5 KV
12.5 KV
ComEd # 2 MVA
6.4
Circuit # 1 MVA
2.9
SCENARIO 5
Circuit # 2 MVA
6.4
CTA/Metra Connection # 1 MVA
-2.4
12.3 KV
12.3 KV
CTA/Metra Connection # 2 MVA
0
CTA/Metra MVA
2.4

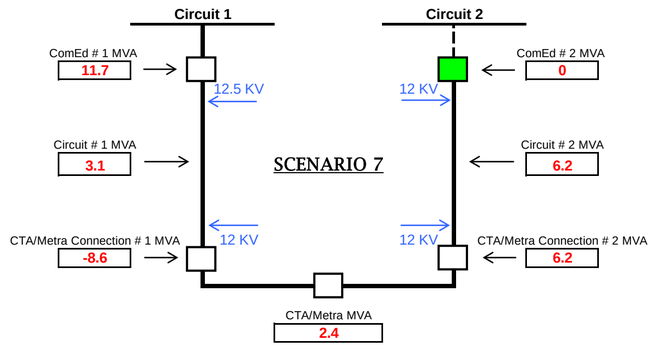
Circuit 1
Circuit 2
ComEd # 1 MVA
11.7
12.5 KV
12 KV
ComEd # 2 MVA
0
Circuit # 1 MVA
3.1
SCENARIO 7
Circuit # 2 MVA
6.2
CTA/Metra Connection # 1 MVA
-8.6
12 KV
12 KV
CTA/Metra Connection # 2 MVA
6.2
CTA/Metra MVA
2.4

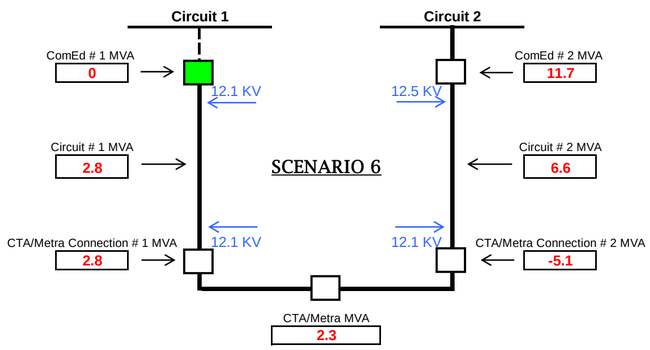
Circuit 1
Circuit 2
ComEd # 1 MVA
0
12.1 KV
12.5 KV
ComEd # 2 MVA
11.7
Circuit # 1 MVA
2.8
SCENARIO 6
Circuit # 2 MVA
6.6
CTA/Metra Connection # 1 MVA
2.8
12.1 KV
12.1 KV
CTA/Metra Connection # 2 MVA
-5.1
CTA/Metra MVA
2.3

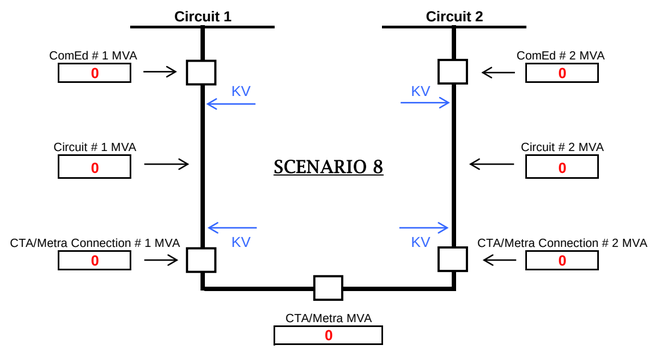
Circuit 1
Circuit 2
ComEd # 1 MVA
0
KV
KV
ComEd # 2 MVA
0
Circuit # 1 MVA
0
SCENARIO 8
Circuit # 2 MVA
0
CTA/Metra Connection # 1 MVA
0
KV
KV
CTA/Metra Connection # 2 MVA
0
CTA/Metra MVA
0

GG CTA CYME Study Information

- [redacted], GG CTA, assumed load demand [redacted]kW at PF=[redacted] (From load information provided by Cedar).

- [redacted], [redacted], assumed load demand [redacted]kW at PF=[redacted] (From load information provided by CIMS and Cedar).

- [redacted], -[redacted], assumed load demand [redacted]kW at PF=[redacted] (From load information provided by CIMS and Cedar).

- [redacted] APT load information used.
  - [redacted] APT selected load date: [redacted]
  - [redacted] APT actual load on [redacted]: [redacted]A/[redacted]A/[redacted]A ➔ [redacted]A
  - [redacted] APT WA on selected load date: [redacted]
  - [redacted] WA load: [redacted]A/[redacted]A/[redacted]A ➔ [redacted]A

- [redacted] APT load information used.
  - [redacted] APT selected load date: [redacted]
  - [redacted] APT actual load on [redacted]: [redacted]A/[redacted]A/[redacted]A ➔ [redacted]A
  - [redacted] APT WA on selected load date: [redacted]
  - [redacted] WA load: [redacted]A/[redacted]A/[redacted]A➔ [redacted]A

- [redacted] APT load information used.
  - [redacted] APT selected load date: [redacted]
  - [redacted] APT actual load on [redacted]: [redacted]A/[redacted]A/[redacted]A ➔ [redacted]A
  - [redacted] APT WA on selected load date: [redacted]
  - [redacted] WA load: [redacted]A/[redacted]A/[redacted]A ➔ [redacted]A

- GG CTA load allocation method
  - Validate in the CYME model all transformers, ESS loads, including [redacted] kVA for each feeding line at [redacted] per Cedar meter information.
  - Open section [redacted], (i.e., assumed zero point of the network). This allowed for proper load allocation on the feeders.
  - Power factor of [redacted] for [redacted] and [redacted] for [redacted] were used during allocation so as to obtain an adjusted load PF of [redacted] – [redacted] on all feeders.
  - Ignore motors.
  - Open zero-point section and allocate the loads.
  - Close zero-point and run analysis.

- Physical midpoint kV on feeder [redacted] is taken at section [redacted] and the endpoint kV is taken at section [redacted].

- Physical midpoint kV on feeder [redacted] is taken at section [redacted] and the endpoint kV is taken at section [redacted].

GG CTA- CYME Study Results

Scenario	@ CTA -Connection #1 (MVA)	@ CTA - Connection #2 (MVA)	@ ComEd - Circuit #1 (MVA)	@ ComEd - Circuit #2 (MVA)	@ CTA -Connection #1 (kV)	@ CTA - Connection #2 (kV)	@ ComEd - Circuit #1 (kV)	@ ComEd - Circuit #2 (kV)	@ ComEd - Circuit #1 Midpoint (kV)	@ ComEd - Circuit #2 Midpoint (kV)	@ ComEd - Circuit #1 Endpoint (kV)	@ ComEd - Circuit #2 Endpoint (kV)
1	-2.5	0.2	5.4	6.3	12.3	12.3	12.5	12.5	12.4	12.3	12.3	12.3
2	0	-2.4	0	8.9	0	12.2	0	12.5	0	12.3	0	12.2
3	0	-2.4	2.9	8.9	12.5	12.2	12.5	12.5	12.5	12.3	12.5	12.2
4	-2.4	0	5.3	0	12.3	0	12.5	0	12.4	0	12.3	0
5	-2.4	0	5.3	6.4	12.3	12.3	12.5	12.5	12.4	12.4	12.3	12.3
6	2.8	-5.1	0	11.7	12.1	12.1	12.1	12.5	12.1	12.2	12.1	12.1
7	-8.6	6.2	11.7	0	12.0	12.0	12.5	12.0	12.2	12.0	12.0	12.0

Scenario:

Scenario 1: @ CTA/Metra connection #1 and #2 closed, @ ComEd circuit #1 and #2 closed. This represents the normal condition.

Scenario 2: @ CTA/Metra connection #1 open and #2 closed, @ ComEd circuit #1 open and #2 closed. This represents an outage of ComEd circuit #1.

Scenario 3: @ CTA/Metra connection #1 and bus tie open and #2 closed, @ ComEd circuit #1 and #2 closed. This represents an outage of CTA/Metra Bus #1.

Scenario 4: @ CTA/Metra connection #1 closed and #2 open, @ ComEd circuit #1 closed and #2 open. This represents an outage of ComEd circuit #2.

Scenario 5: @ CTA/Metra connection #1 closed and #2 and bus tie open, @ ComEd circuit #1 and #2 closed. This represents an outage of CTA/Metra Bus #2.

Scenario 6: @ CTA/Metra connection #1 and #2 closed, @ ComEd circuit #1 open and #2 closed. This represents loss of source for ComEd circuit #1.

Scenario 7: @ CTA/Metra connection #1 and #2 closed, @ ComEd circuit #1 closed and #2 open. This represents loss of source for ComEd circuit #2.

CONFIDENTIAL AND PROPRIETARY - CEII

GG SUBSTATION

GGG - CYME Study Results

Scenario	@ CTA / Metra -Connection #1 (MVA)	@ CTA / Metra - Connection #2 (MVA)	@ ComEd - Circuit #1 (MVA)	@ ComEd - Circuit #2 (MVA)	@ CTA / Metra - Connection #1 (kV)	@ CTA / Metra - Connection #2 (kV)	@ ComEd - Circuit #1 (kV)	@ ComEd - Circuit #2 (kV)
1	-2.2	1.9	6.1	6.6	12.7	12.7	13.0	13.0
2	0.0	-0.3	0.0	8.8	0.0	12.6	0.0	13.0
3	0.0	-0.3	3.8	8.8	12.8	12.6	13.0	13.0
4	-0.3	0.0	4.1	0.0	12.8	0.0	13.0	0.0
5	-0.3	0.0	4.1	8.5	12.8	12.6	13.0	13.0
6	3.6	-3.9	0.0	12.6	12.4	12.4	12.3	13.0
7	-8.3	8.0	12.6	0.0	12.3	12.3	13.0	12.2
8								

GGG Cyme Results Comparison

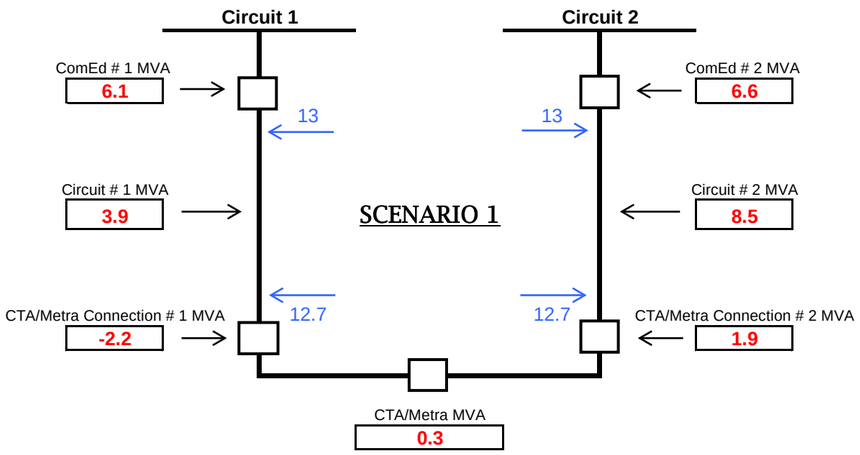

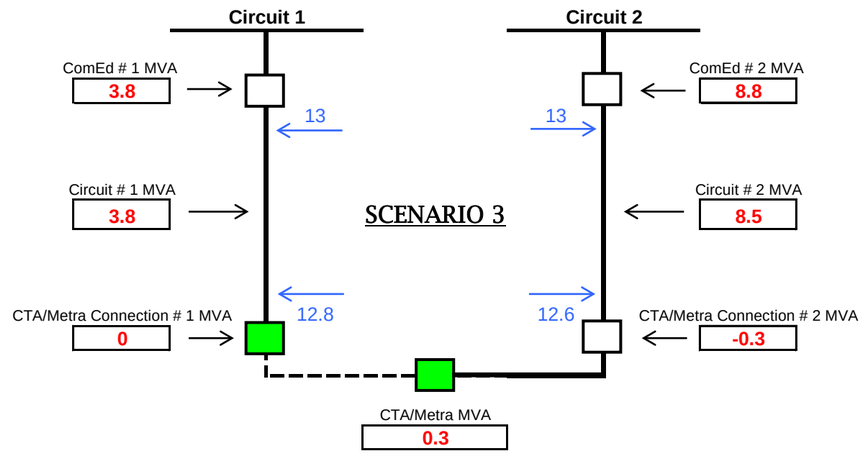

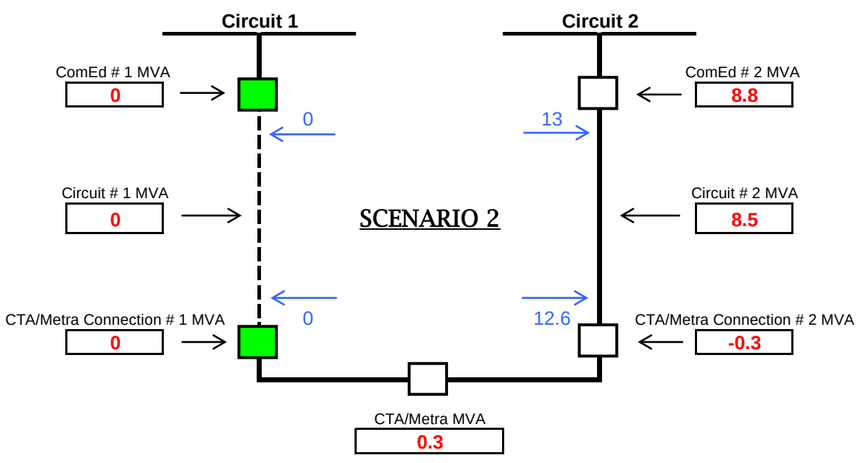

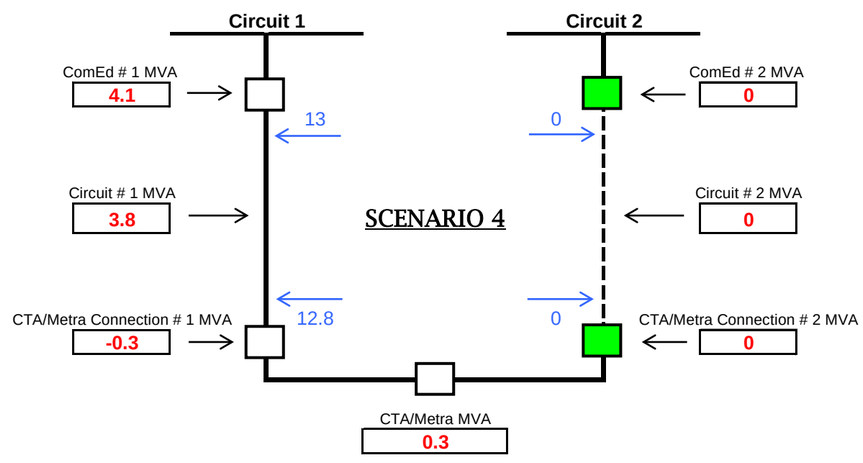

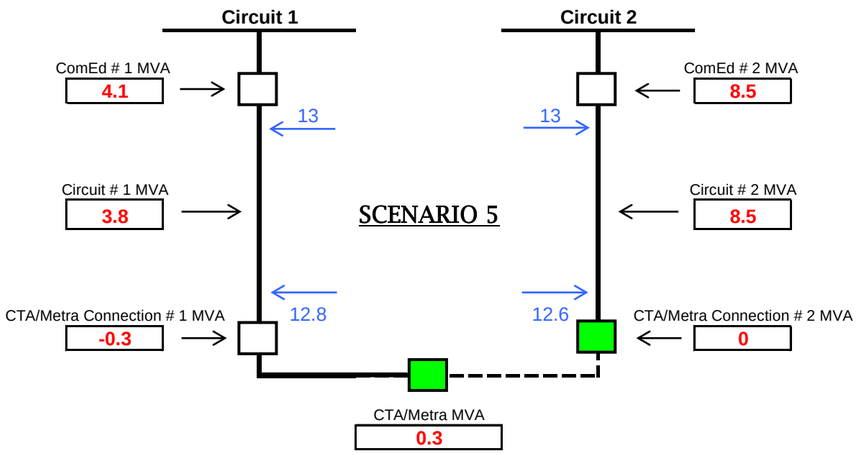
Circuit 1
Circuit 2
ComEd # 1 MVA
4.1
13
13
ComEd # 2 MVA
8.5
Circuit # 1 MVA
3.8
SCENARIO 5
Circuit # 2 MVA
8.5
12.8
12.6
CTA/Metra Connection # 1 MVA
-0.3
CTA/Metra Connection # 2 MVA
0
CTA/Metra MVA
0.3

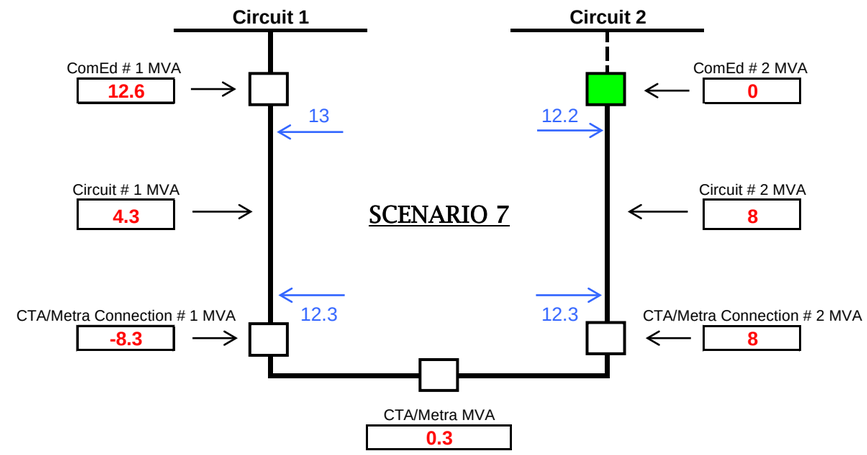
Circuit 1
Circuit 2
ComEd # 1 MVA
12.6
13
12.2
ComEd # 2 MVA
0
Circuit # 1 MVA
4.3
SCENARIO 7
Circuit # 2 MVA
8
12.3
12.3
CTA/Metra Connection # 1 MVA
-8.3
CTA/Metra Connection # 2 MVA
8
CTA/Metra MVA
0.3

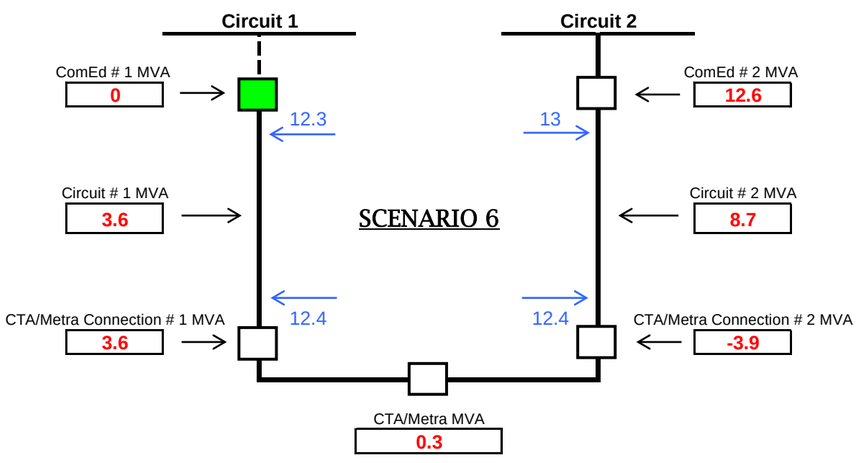
Circuit 1
Circuit 2
ComEd # 1 MVA
0
12.3
13
ComEd # 2 MVA
12.6
Circuit # 1 MVA
3.6
SCENARIO 6
Circuit # 2 MVA
8.7
12.4
12.4
CTA/Metra Connection # 1 MVA
3.6
CTA/Metra Connection # 2 MVA
-3.9
CTA/Metra MVA
0.3

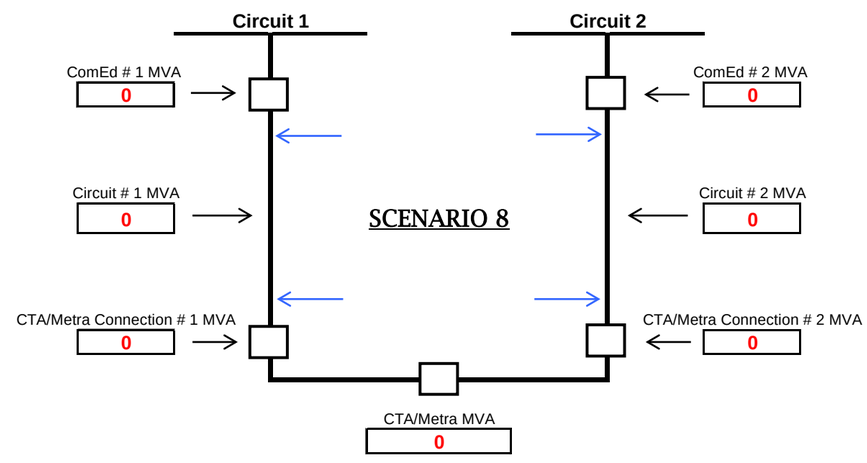
Circuit 1
Circuit 2
ComEd # 1 MVA
0
ComEd # 2 MVA
0
Circuit # 1 MVA
0
SCENARIO 8
Circuit # 2 MVA
0
CTA/Metra Connection # 1 MVA
0
CTA/Metra Connection # 2 MVA
0
CTA/Metra MVA
0

GGG CYME Study Information

- [redacted] [redacted] assumed load demand [redacted] kW at PF [redacted] (From load information provided by Cedar).

- [redacted] APT load information used.
  - [redacted] APT selected load date: [redacted]
  - [redacted] APT actual load on [redacted]
  - [redacted] APT WA on selected load date: [redacted]
  - [redacted] WA load: [redacted]

- [redacted] APT load information used.
  - [redacted] APT selected load date: [redacted]
  - [redacted] APT actual load on [redacted]
  - [redacted] APT WA on selected load date: [redacted]
  - [redacted] WA load: [redacted]

- [redacted] APT load information used.
  - [redacted] APT selected load date: [redacted]
  - [redacted] APT actual load on [redacted]
  - [redacted] APT WA on selected load date: [redacted]
  - [redacted] WA load: [redacted]

- [redacted] load allocation method
  - Validate in the CYME model all transformers, ESS loads, including [redacted] kVA for each feeding line at [redacted] per Cedar meter information.
  - Open section 486856904, (i.e., assumed zero point of the network). This allowed for proper load allocation on the feeders.
  - Power factor of [redacted] for [redacted] and [redacted] for [redacted] were used during allocation so as to obtain an adjusted load PF of [redacted] on all feeders.
  - Ignore motors.
  - Open zero-point section and allocate the loads.
  - Close zero-point and run analysis.

- Physical midpoint kV on feeder [redacted] is taken at section 486807915 and the endpoint kV is taken at section 486793892.

- Physical midpoint kV on feeder [redacted] is taken at section 486857051 and the endpoint kV is taken at section 486738797.

GGG - CYME Study Results

Scenario	@ CTA -Connection #1 (MVA)	@ CTA - Connection #2 (MVA)	@ ComEd - Circuit #1 (MVA)	@ ComEd - Circuit #2 (MVA)	@ CTA -Connection #1 (kV)	@ CTA - Connection #2 (kV)	@ ComEd - Circuit #1 (kV)	@ ComEd - Circuit #2 (kV)	@ ComEd - Circuit #1 Midpoint (kV)	@ ComEd - Circuit #2 Midpoint (kV)	@ ComEd - Circuit #1 Endpoint (kV)	@ ComEd - Circuit #2 Endpoint (kV)
1	-2.2	1.9	6.1	6.6	12.7	12.7	13.0	13.0	12.7	12.7	12.7	12.6
2	0	-0.3	0	8.8	0	12.6	0	13.0	0	12.6	0	12.5
3	0	-0.3	3.8	8.8	12.8	12.6	13.0	13.0	12.8	12.6	12.8	12.5
4	-0.3	0	4.1	0	12.8	0	13.0	0	12.8	0	12.8	0
5	-0.3	0	4.1	8.5	12.8	12.6	13.0	13.0	12.8	12.6	12.8	12.5
6	3.6	-3.9	0	12.6	12.4	12.4	12.3	13.0	12.3	12.4	12.3	12.3
7	-8.3	8.0	12.6	0	12.3	12.3	13.0	12.2	12.4	12.2	12.4	12.1

Scenario:

Scenario 1: @ CTA/Metra connection #1 and #2 closed, @ ComEd circuit #1 and #2 closed. This represents the normal condition.

Scenario 2: @ CTA/Metra connection #1 open and #2 closed, @ ComEd circuit #1 open and #2 closed. This represents an outage of ComEd circuit #1.

Scenario 3: @ CTA/Metra connection #1 and bus tie open and #2 closed, @ ComEd circuit #1 and #2 closed. This represents an outage of CTA/Metra Bus #1.

Scenario 4: @ CTA/Metra connection #1 closed and #2 open, @ ComEd circuit #1 closed and #2 open. This represents an outage of ComEd circuit #2.

Scenario 5: @ CTA/Metra connection #1 closed and #2 and bus tie open, @ ComEd circuit #1 and #2 closed. This represents an outage of CTA/Metra Bus #2.

Scenario 6: @ CTA/Metra connection #1 and #2 closed, @ ComEd circuit #1 open and #2 closed. This represents loss of source for ComEd circuit #1.

Scenario 7: @ CTA/Metra connection #1 and #2 closed, @ ComEd circuit #1 closed and #2 open. This represents loss of source for ComEd circuit #2.

CONFIDENTIAL AND PROPRIETARY - CEII

GGG SUBSTATION

G-R CYME Study Results

Scenario	CTA Connection #1 (MVA)	CTA Connection #2 (MVA)	Metra Connection #3 (MVA)	Metra Connection #4 (MVA)	ComEd Circuit #1 (MVA)	ComEd Circuit #2 (MVA)	CTA Connection #1 (kV)	CTA Connection #2 (kV)	Metra Connection #3 (kV)	Metra Connection #4 (kV)	ComEd Circuit #1 (kV)	ComEd Circuit #2 (kV)
1	-6.8	6.3	-3.5	-1.2	6.8	6.2	12.9	12.8	12.7	12.7	12.9	12.9
2	0	-0.4	3.2	-7.8	0	13.3	0	12.1	12.2	12.2	0	12.7
3	0	-0.4	3.2	-7.8	0	13.3	13	12.1	12.2	12.2	13	12.7
4	-0.4	0	2.7	-7.3	0.4	12.8	13	12.2	12.2	12.2	13	12.8
5	-7.9	7.5	-4.6	0	7.9	0	12.8	12.8	12.6	0	12.8	0
6	-7.9	7.4	-4.6	0	7.9	5.1	12.8	12.8	12.6	12.8	12.8	12.9
7	-3.2	2.7	0	-4.6	3.2	9.9	12.9	12.9	12.9	12.4	12.9	12.8
8	0	-0.4	3.2	-7.8	0	13.3	12.1	12.1	12.2	12.2	12.1	12.7
9	-13.1	12.7	-9.6	5.1	13.2	0	12.7	12.7	12.3	12.3	12.8	12.3
10	-0.4	0	0	-4.6	0.4	9.9	13	0	0	12.4	13	12.8
11	-3.2	2.7	0	-4.6	3.2	9.9	12.9	12.9	12.9	12.4	12.9	12.8

G-R Cyme Results Comparison

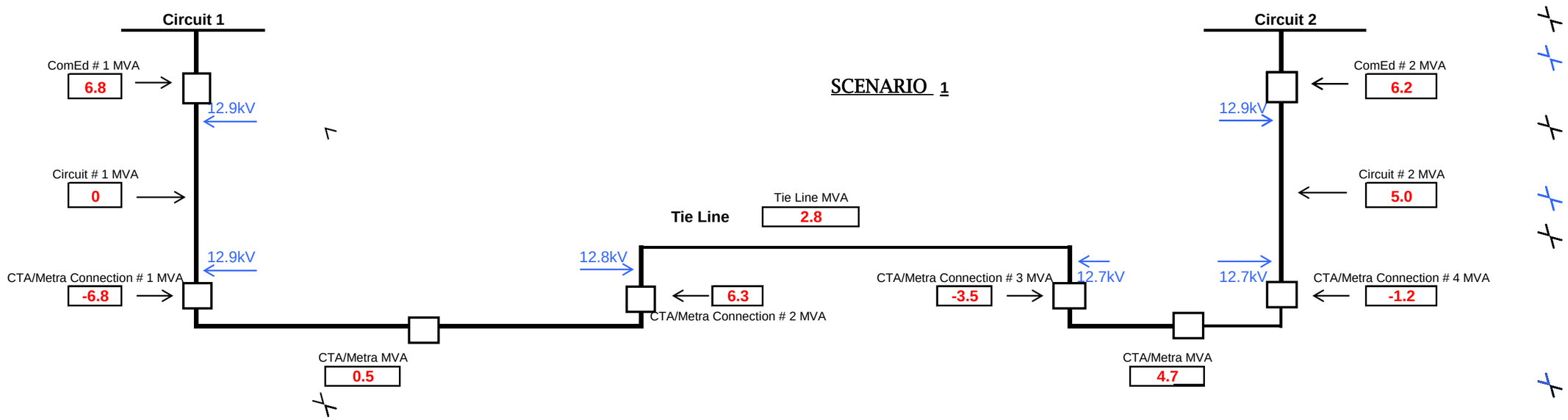

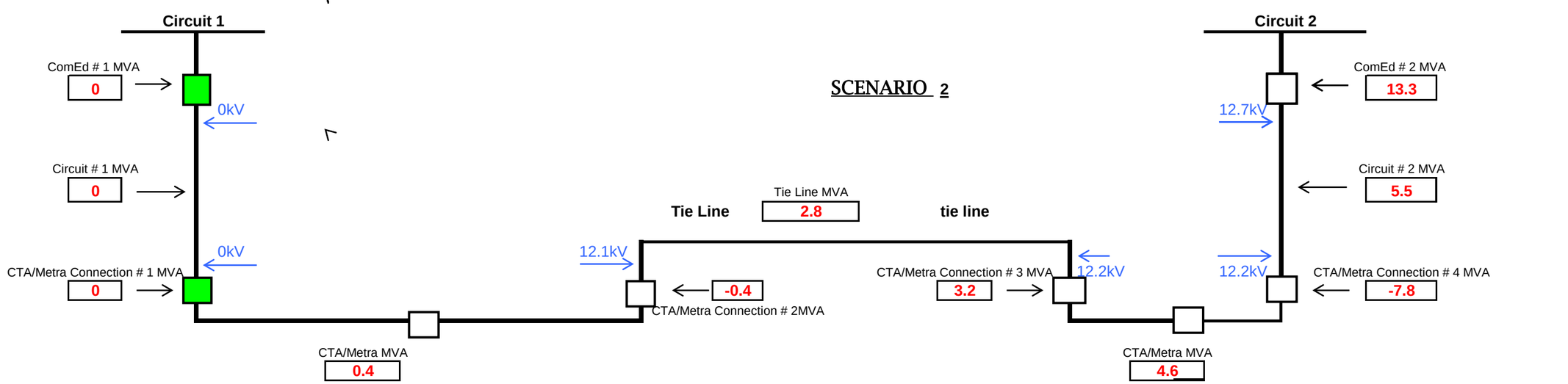

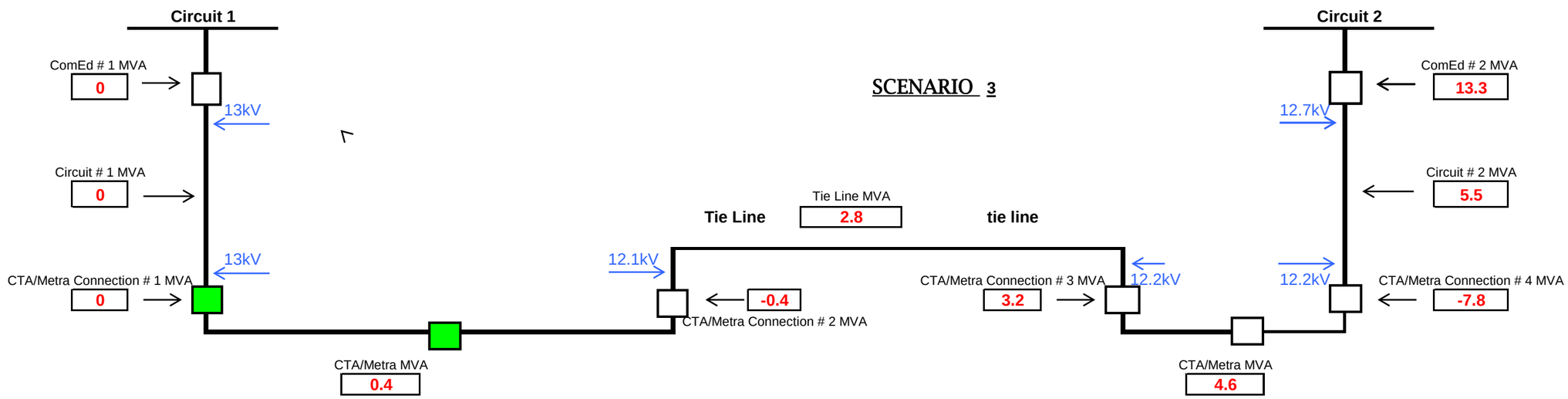
SCENARIO 3
Circuit 1
Circuit 2
ComEd # 1 MVA
0
13kV
Circuit # 1 MVA
0
13kV
CTA/Metra Connection # 1 MVA
0
CTA/Metra MVA
0.4
Tie Line
Tie Line MVA
2.8
tie line
12.1kV
-0.4
CTA/Metra Connection # 2 MVA
CTA/Metra Connection # 3 MVA
3.2
12.2kV
ComEd # 2 MVA
13.3
12.7kV
Circuit # 2 MVA
5.5
12.2kV
CTA/Metra Connection # 4 MVA
-7.8
CTA/Metra MVA
4.6

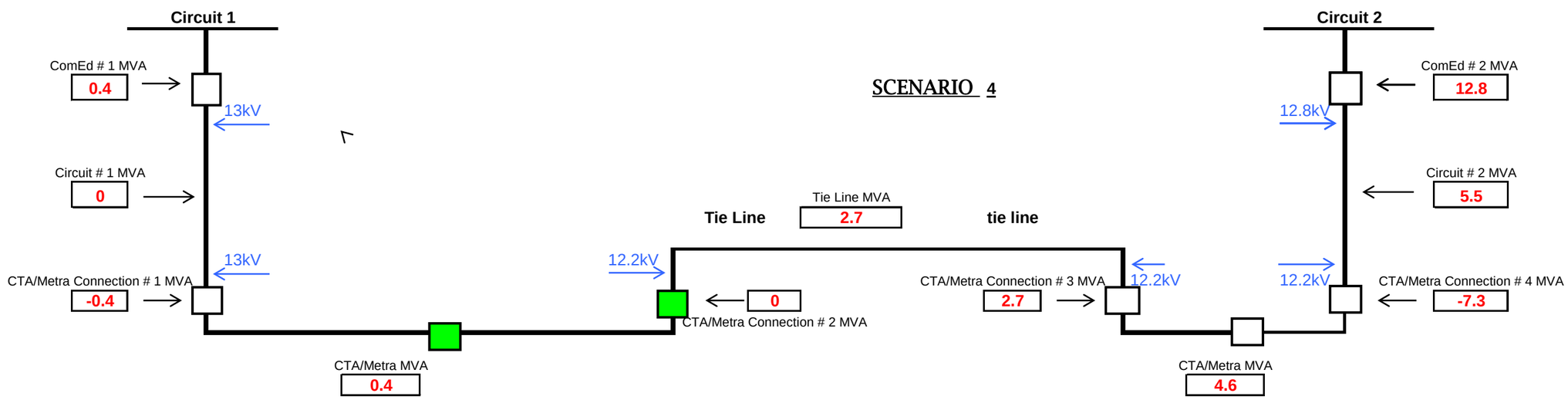
SCENARIO 4
Circuit 1
Circuit 2
ComEd # 1 MVA
0.4
13kV
Circuit # 1 MVA
0
13kV
CTA/Metra Connection # 1 MVA
-0.4
CTA/Metra MVA
0.4
Tie Line
Tie Line MVA
2.7
tie line
12.2kV
0
CTA/Metra Connection # 2 MVA
CTA/Metra Connection # 3 MVA
2.7
12.2kV
ComEd # 2 MVA
12.8
12.8kV
Circuit # 2 MVA
5.5
12.2kV
CTA/Metra Connection # 4 MVA
-7.3
CTA/Metra MVA
4.6

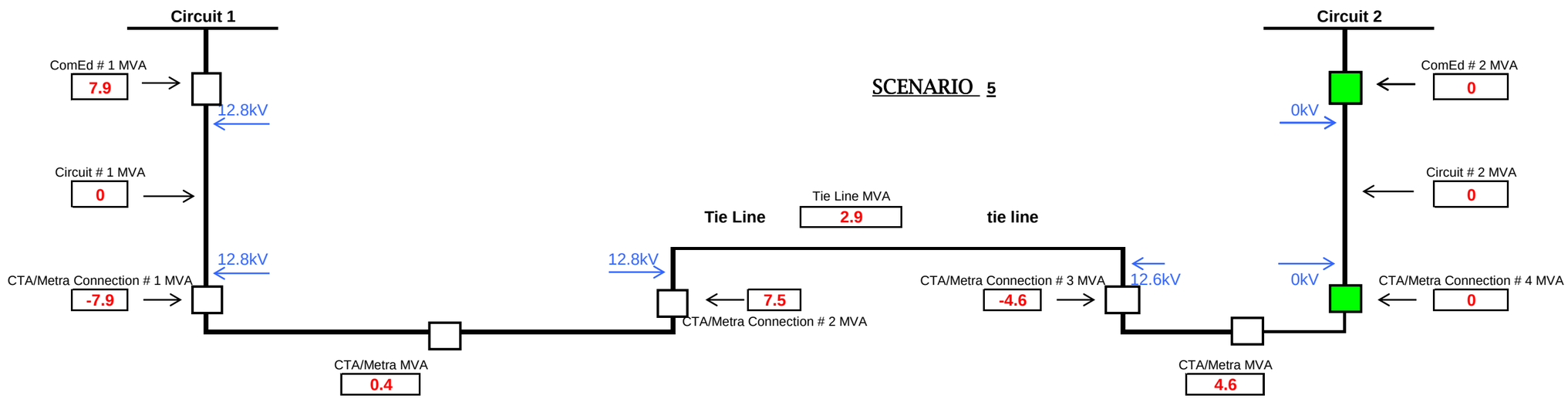
SCENARIO 5
Circuit 1
Circuit 2
ComEd # 1 MVA
7.9
12.8kV
Circuit # 1 MVA
0
12.8kV
CTA/Metra Connection # 1 MVA
-7.9
ComEd # 2 MVA
0
0kV
Circuit # 2 MVA
0
0kV
CTA/Metra Connection # 4 MVA
0
Tie Line
Tie Line MVA
2.9
tie line
12.8kV
7.5
CTA/Metra Connection # 2 MVA
CTA/Metra Connection # 3 MVA
-4.6
12.6kV
CTA/Metra MVA
0.4
CTA/Metra MVA
4.6

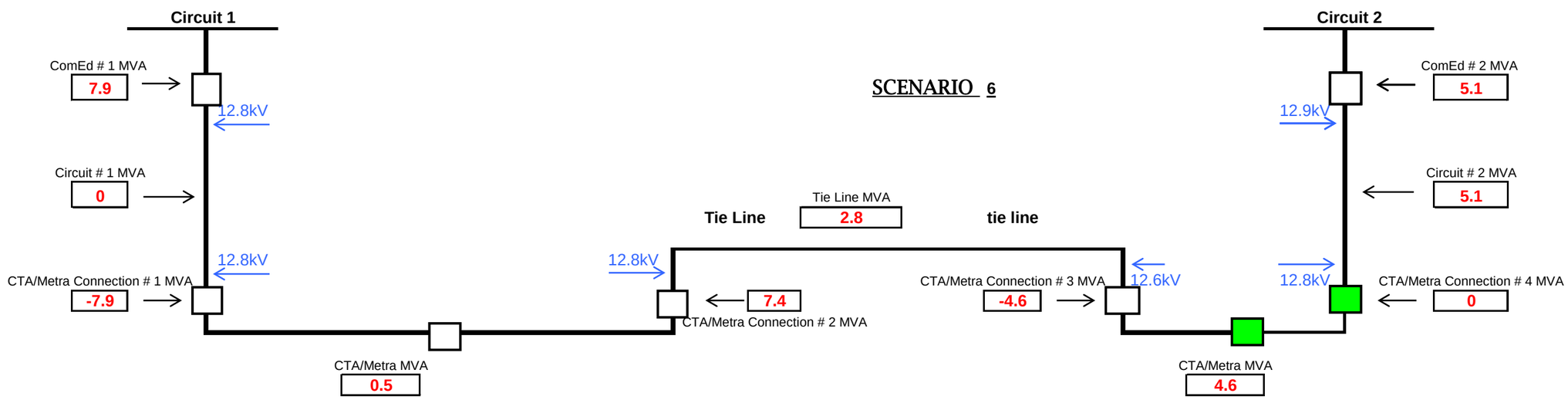
SCENARIO 6
Circuit 1
Circuit 2
ComEd # 1 MVA
7.9
12.8kV
Circuit # 1 MVA
0
12.8kV
CTA/Metra Connection # 1 MVA
-7.9
ComEd # 2 MVA
5.1
12.9kV
Circuit # 2 MVA
5.1
12.8kV
CTA/Metra Connection # 4 MVA
0
Tie Line
Tie Line MVA
2.8
tie line
12.8kV
7.4
CTA/Metra Connection # 2 MVA
CTA/Metra Connection # 3 MVA
-4.6
12.6kV
CTA/Metra MVA
0.5
CTA/Metra MVA
4.6

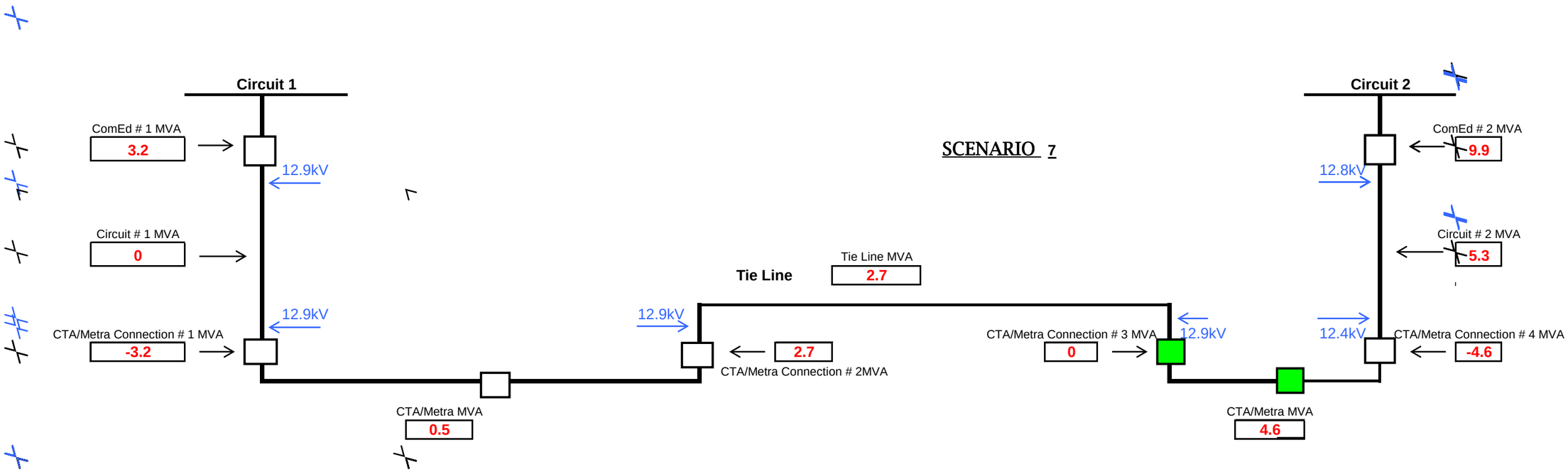
SCENARIO 7
Circuit 1
Circuit 2
ComEd # 1 MVA
3.2
12.9kV
Circuit # 1 MVA
0
12.9kV
CTA/Metra Connection # 1 MVA
-3.2
CTA/Metra MVA
0.5
Tie Line
Tie Line MVA
2.7
12.9kV
2.7
CTA/Metra Connection # 2MVA
CTA/Metra Connection # 3 MVA
0
12.9kV
CTA/Metra MVA
4.6
ComEd # 2 MVA
9.9
12.8kV
Circuit # 2 MVA
5.3
12.4kV
CTA/Metra Connection # 4 MVA
-4.6

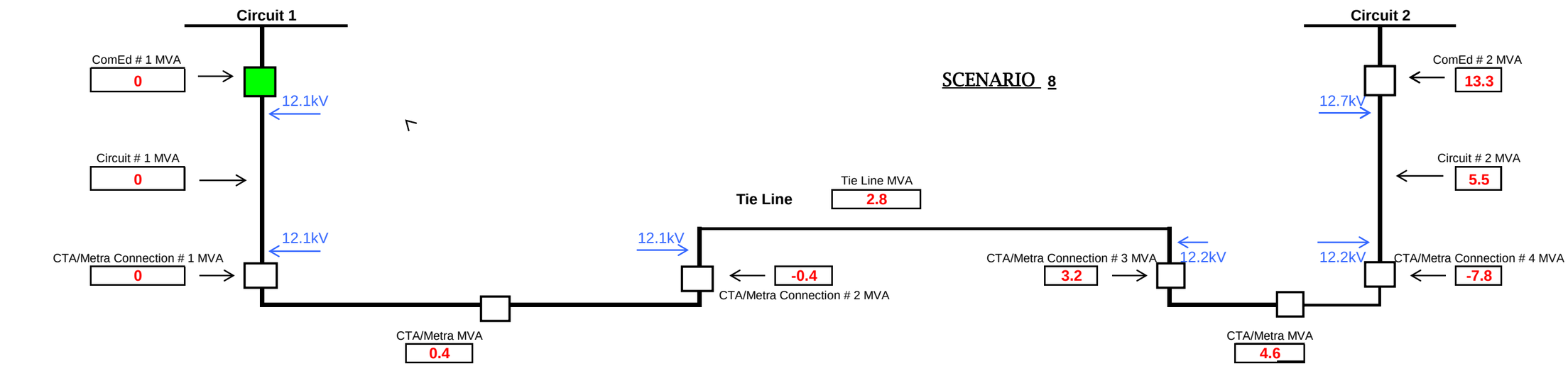
SCENARIO 8
Circuit 1
Circuit 2
ComEd # 1 MVA
0
12.1kV
Circuit # 1 MVA
0
12.1kV
CTA/Metra Connection # 1 MVA
0
CTA/Metra MVA
0.4
Tie Line
Tie Line MVA
2.8
12.1kV
-0.4
CTA/Metra Connection # 2 MVA
CTA/Metra Connection # 3 MVA
3.2
12.2kV
CTA/Metra MVA
4.6
ComEd # 2 MVA
13.3
12.7kV
Circuit # 2 MVA
5.5
12.2kV
CTA/Metra Connection # 4 MVA
-7.8

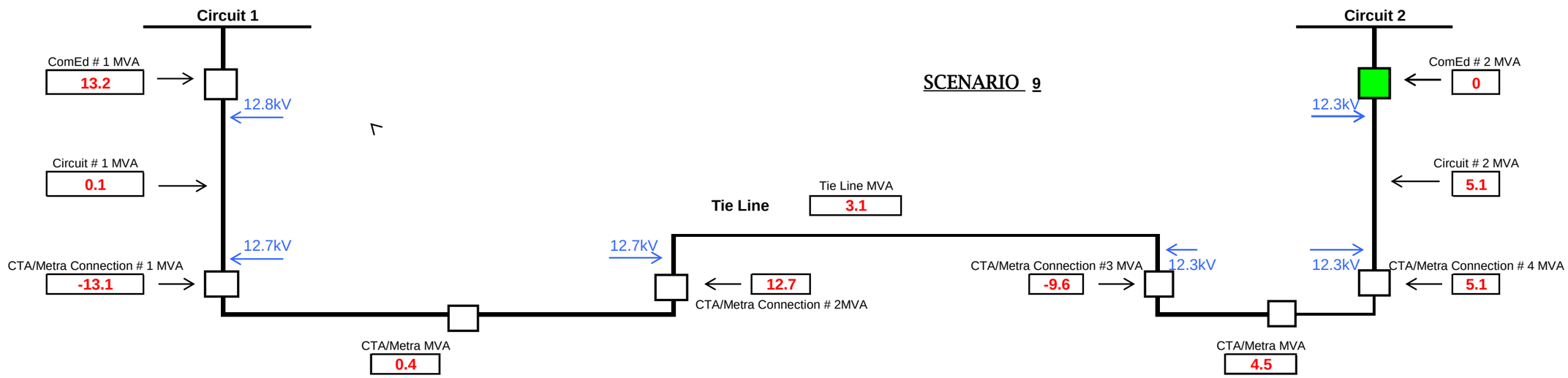
SCENARIO 9
Circuit 1
Circuit 2
ComEd # 1 MVA
13.2
12.8kV
Circuit # 1 MVA
0.1
12.7kV
CTA/Metra Connection # 1 MVA
-13.1
CTA/Metra MVA
0.4
Tie Line
Tie Line MVA
3.1
12.7kV
12.7
CTA/Metra Connection # 2MVA
CTA/Metra Connection #3 MVA
-9.6
12.3kV
CTA/Metra MVA
4.5
ComEd # 2 MVA
0
12.3kV
Circuit # 2 MVA
5.1
12.3kV
CTA/Metra Connection # 4 MVA
5.1

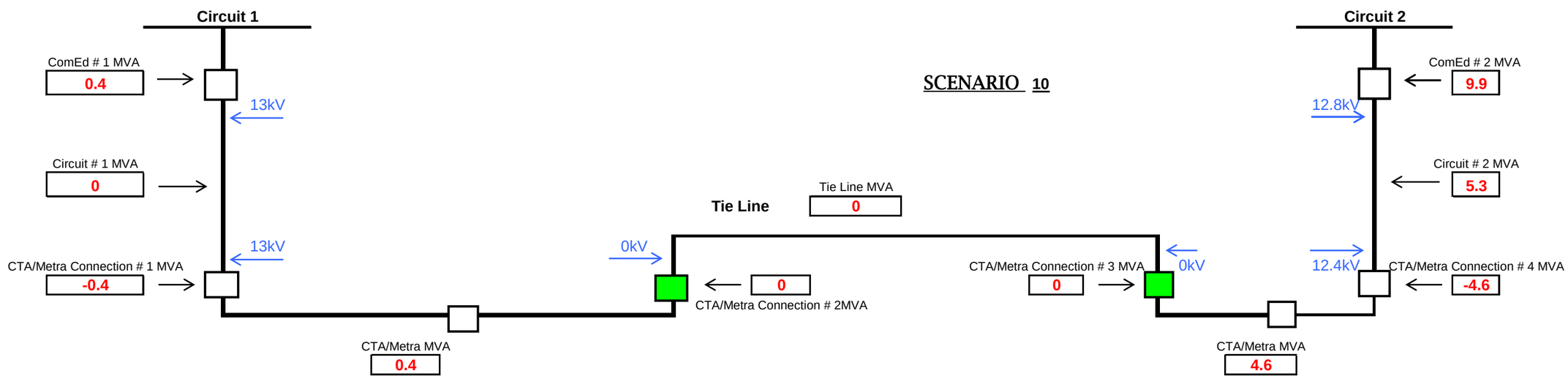
SCENARIO 10
Circuit 1
Circuit 2
ComEd # 1 MVA
0.4
13kV
Circuit # 1 MVA
0
13kV
CTA/Metra Connection # 1 MVA
-0.4
CTA/Metra MVA
0.4
Tie Line
Tie Line MVA
0
0kV
0
CTA/Metra Connection # 2MVA
CTA/Metra Connection # 3 MVA
0
0kV
CTA/Metra MVA
4.6
ComEd # 2 MVA
9.9
12.8kV
Circuit # 2 MVA
5.3
12.4kV
CTA/Metra Connection # 4 MVA
-4.6

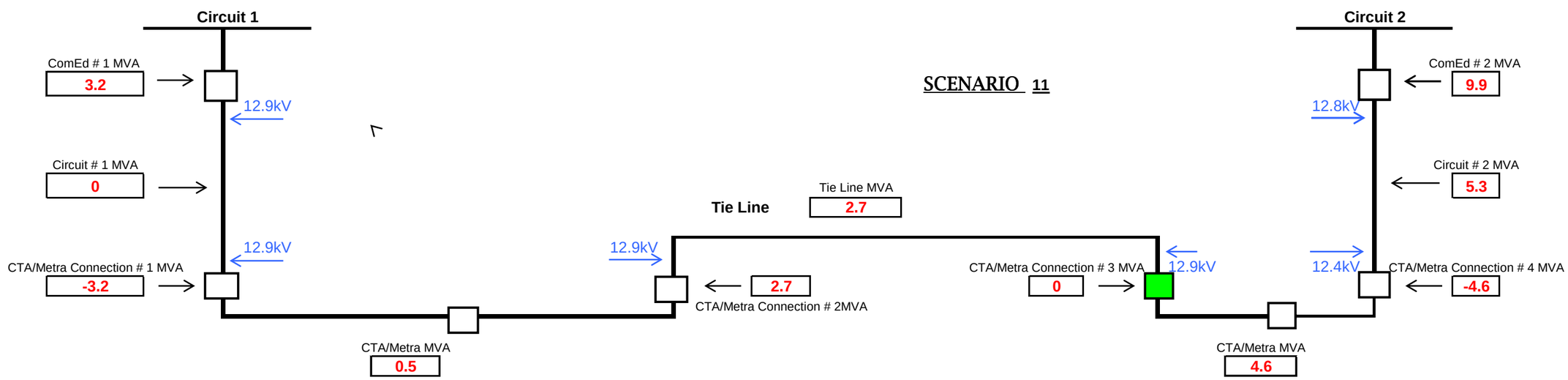
SCENARIO 11
Circuit 1
Circuit 2
ComEd # 1 MVA
3.2
12.9kV
Circuit # 1 MVA
0
12.9kV
CTA/Metra Connection # 1 MVA
-3.2
CTA/Metra MVA
0.5
Tie Line
Tie Line MVA
2.7
12.9kV
2.7
CTA/Metra Connection # 2MVA
CTA/Metra Connection # 3 MVA
0
12.9kV
CTA/Metra MVA
4.6
ComEd # 2 MVA
9.9
12.8kV
Circuit # 2 MVA
5.3
12.4kV
CTA/Metra Connection # 4 MVA
-4.6

G-R CYME Study Results

Scenario	@ CTA Connection #1 (MVA)	@ CTA Connection #2 (MVA)	@ Metra Connection #3 (MVA)	@ Metra Connection #4 (MVA)	@ ComEd Circuit #1 (MVA))	@ ComEd Circuit #2 (MVA)	@ CTA Connection #1 (kV)	@ CTA Connection #2 (kV)	@ Metra Connection #3 (kV)	@ Metra Connection #4 (kV)	@ ComEd Circuit #1 (kV)	@ ComEd Circuit #2 (kV)	@ ComEd - Circuit #1 Midpoint (kV)	@ ComEd - Circuit #2 Midpoint (kV)	@ ComEd - Circuit #1 Endpoint (kV)	@ ComEd - Circuit #2 Endpoint (kV)
1	-6.8	6.3	-3.5	-1.2	6.8	6.2	12.9	12.8	12.7	12.7	12.9	12.9	12.9	12.7	12.9	12.6
2	0.0	-0.4	3.2	-7.8	0.0	13.3	0.0	12.1	12.2	12.2	0.0	12.7	0.0	12.3	0.0	12.1
3	0.0	-0.4	3.2	-7.8	0.0	13.3	13.0	12.1	12.2	12.2	13.0	12.7	13.0	12.3	13.0	12.1
4	-0.4	0.0	2.7	-7.3	0.4	12.8	13.0	12.2	12.2	12.2	13.0	12.8	13.0	12.3	13.0	12.2
5	-7.9	7.5	-4.6	0.0	7.9	0.0	12.8	12.8	12.6	0.0	12.8	0.0	12.8	0.0	12.8	0.0
6	-7.9	7.4	-4.6	0.0	7.9	5.1	12.8	12.8	12.6	12.8	12.8	12.9	12.8	12.8	12.8	12.7
7	-3.2	2.7	0.0	-4.6	3.2	9.9	12.9	12.9	12.9	12.4	12.9	12.8	12.9	12.5	12.9	12.4
8	0.0	-0.4	3.2	-7.8	0.0	13.3	12.1	12.1	12.2	12.2	12.1	12.7	12.1	12.3	12.1	12.1
9	-13.1	12.7	-9.6	5.1	13.2	0.0	12.7	12.7	12.3	12.3	12.8	12.3	12.7	12.3	12.7	12.2
10	-0.4	0.0	0.0	-4.6	0.4	9.9	13.0	0.0	0.0	12.4	13.0	12.8	13.0	12.5	13.0	12.4
11	-3.2	2.7	0.0	-4.6	3.2	9.9	12.9	12.9	12.9	12.4	12.9	12.8	12.9	12.5	12.9	12.4

Template CYME Study Results

Scenario:

Scenario 1: @ CTA/Metra connection #1, #2, #3, and #4 closed, @ ComEd circuit #1 and #2, closed. This represents the normal condition.

Scenario 2: @ CTA/Metra connection #1 open and #2, #3, and #4 closed, @ ComEd circuit #1 open and #2 closed. This represents an outage of ComEd circuit #1.

Scenario 3: @ CTA/Metra connection #1 and bus tie open and #2, #3, and #4 closed, @ ComEd circuit #1, and #2 closed. This represents an outage of CTA/Metra Bus #1.

Scenario 4: @ CTA/Metra connection #2 and bus tie open and #1, #3, and #4 closed, @ ComEd circuit #1, and #2 closed. This represents an outage of CTA/Metra Bus #2.

Scenario 5: @ CTA/Metra connection #4 open and #1, #2, and #3 closed, @ ComEd circuit #2 open and #1 closed. This represents an outage of ComEd circuit #2.

Scenario 6: @ CTA/Metra connection #4 and bus tie open and #1, #2, and #3 closed, @ ComEd circuit #1, and #2 closed. This represents an outage of CTA/Metra Bus #1.

Scenario 7: @ CTA/Metra connection #3 and bus tie open and #1, #2, and #4 closed, @ ComEd circuit #1, and #2 closed. This represents an outage of CTA/Metra Bus #2.

Scenario 8: @ CTA/Metra connection #1, #2, #3, and #4 closed, @ ComEd circuit #1 open and #2 closed. This represents loss of source for ComEd circuit #1.

Scenario 9: @ CTA/Metra connection #1, #2, #3, and #4 closed, @ ComEd circuit #1 closed and #2 open. This represents loss of source for ComEd circuit #2.

Scenario 10: @ CTA/Metra connection #2 and #3 open and #1, and #4 closed, @ ComEd circuit #1 and #2 closed. This represents an outage on the cable that ties CTA & Metra.

Scenario 11: @ CTA/Metra connection #3 open and #1, #2, and #4 closed, @ ComEd circuit #1 and #2 closed. This represents the special simulation [redacted].

CONFIDENTIAL AND PROPRIETARY - CEII

G-R SUBSTATION

H CTA CYME Study Results

Scenario	@ CTA / Metra - Connection #1 (MVA)	@ CTA / Metra - Connection #2 (MVA)	@ ComEd - Circuit #1 (MVA)	@ ComEd - Circuit #2 (MVA)	@ CTA / Metra - Connection #1 (kV)	@ CTA / Metra - Connection #2 (kV)	@ ComEd - Circuit #1 (kV)	@ ComEd - Circuit #2 (kV)
1	-4.2	3.4	5.7	4.7	12.9	12.9	13.0	13.0
2	0.0	-0.8	0.0	9.2	0.0	12.3	0.0	13.0
3	0.0	-0.8	2.6	9.2	13.0	12.3	13.0	13.0
4	-0.8	0.0	3.0	0.0	13.0	0.0	13.0	0.0
5	-0.8	0.0	3.0	8.3	13.0	12.5	13.0	13.0
6	2.4	-2.9	0.0	10.8	12.2	12.2	12.2	13.0
7	-9.0	8.2	10.6	0.0	12.7	12.7	13.0	12.3
8	-6.1	5.3	7.7	2.8	12.8	12.8	13.0	13.0

KV

H CTA Cyme Results Comparison

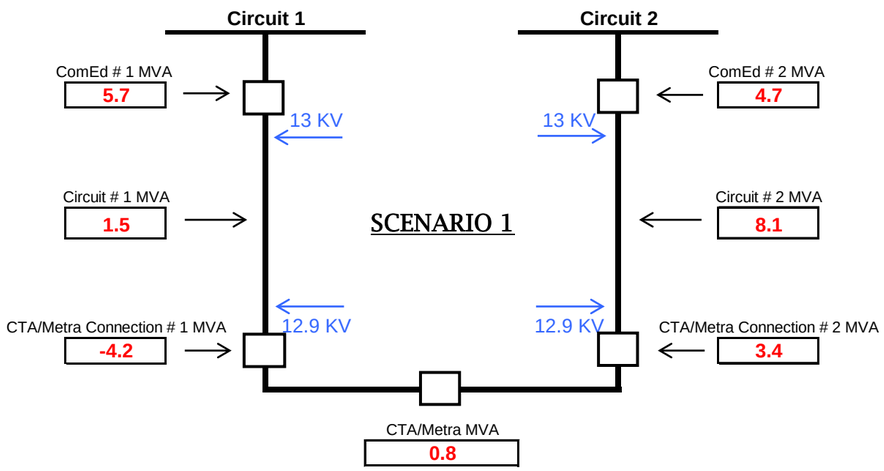

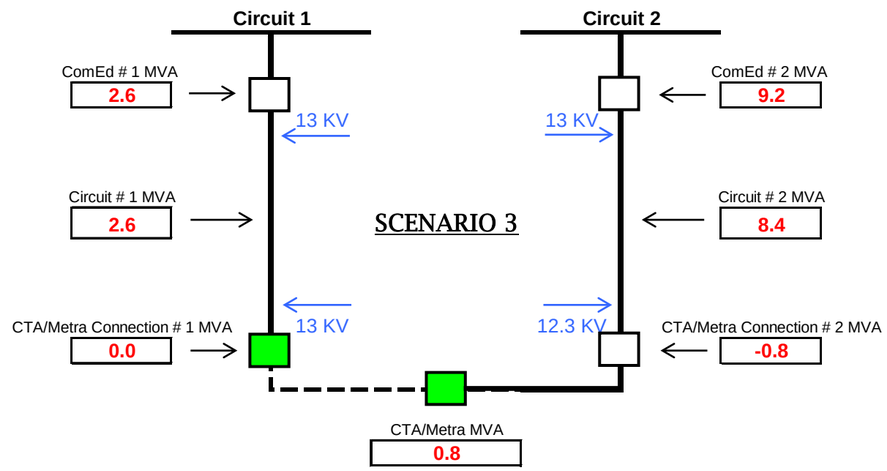

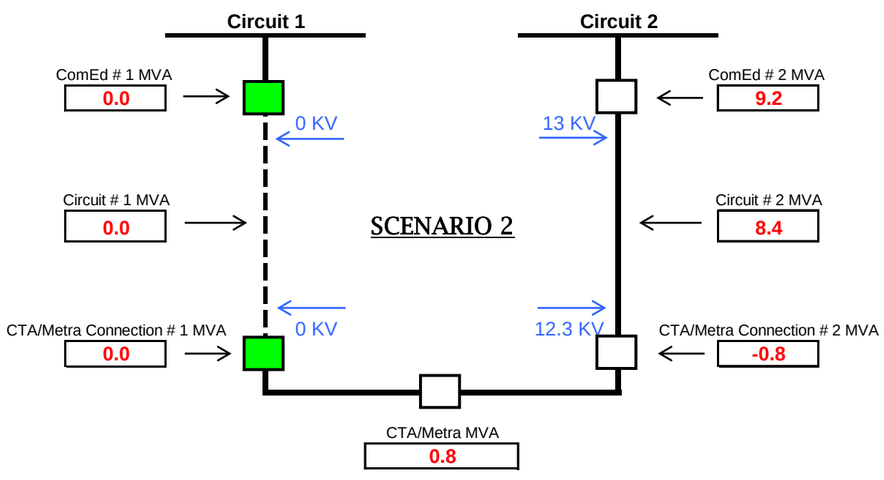

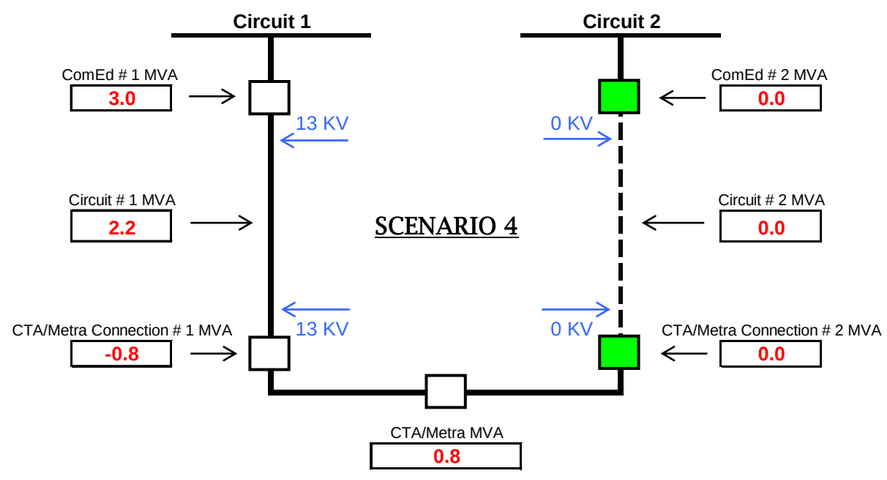

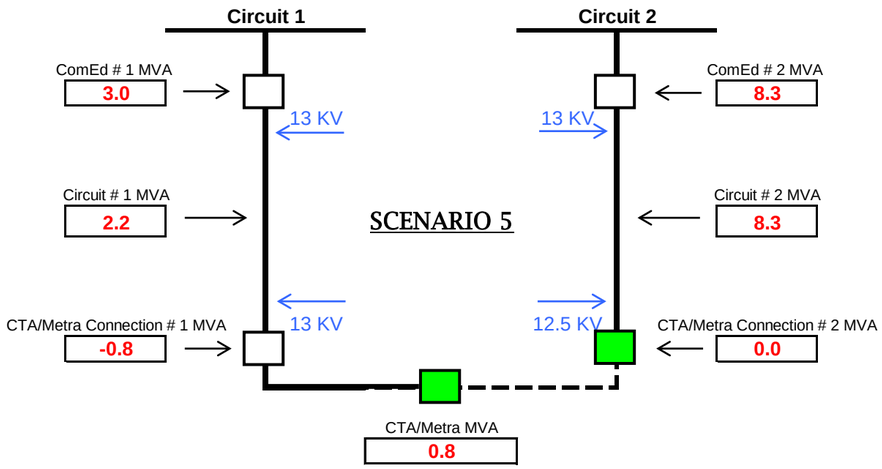
Circuit 1
Circuit 2
ComEd # 1 MVA
3.0
13 KV
13 KV
ComEd # 2 MVA
8.3
Circuit # 1 MVA
2.2
SCENARIO 5
Circuit # 2 MVA
8.3
CTA/Metra Connection # 1 MVA
-0.8
13 KV
12.5 KV
CTA/Metra Connection # 2 MVA
0.0
CTA/Metra MVA
0.8

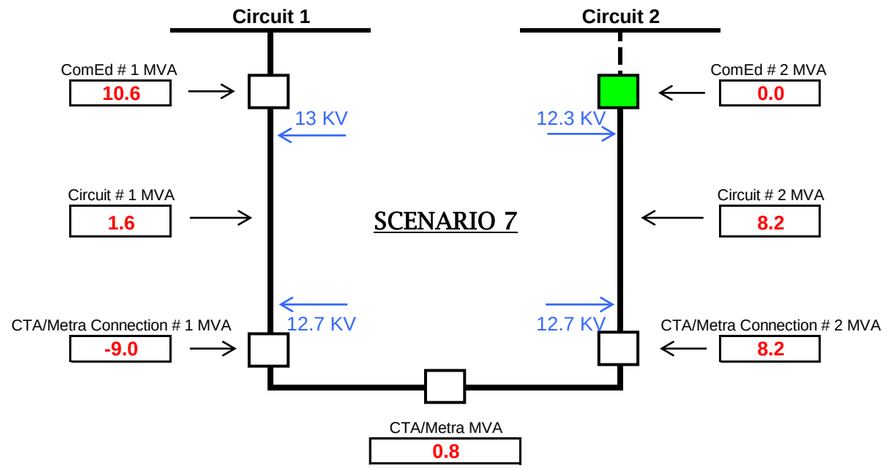
Circuit 1
Circuit 2
ComEd # 1 MVA
10.6
13 KV
12.3 KV
ComEd # 2 MVA
0.0
Circuit # 1 MVA
1.6
SCENARIO 7
Circuit # 2 MVA
8.2
CTA/Metra Connection # 1 MVA
-9.0
12.7 KV
12.7 KV
CTA/Metra Connection # 2 MVA
8.2
CTA/Metra MVA
0.8

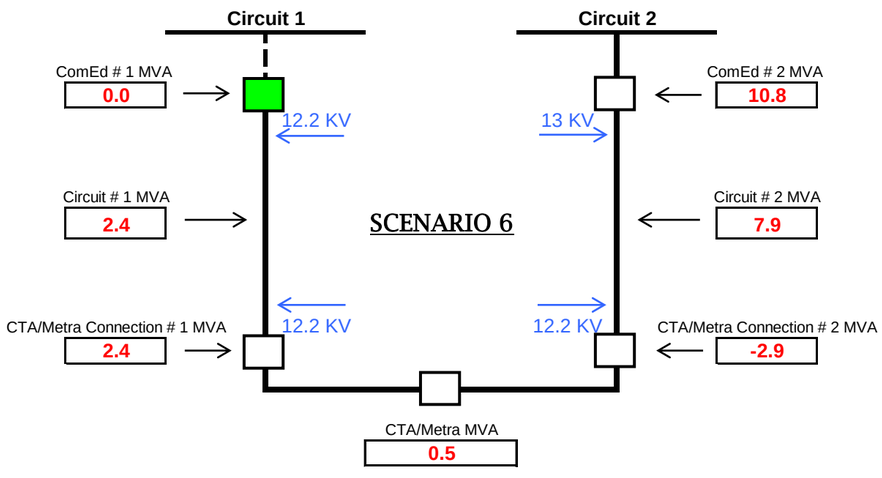
Circuit 1
Circuit 2
ComEd # 1 MVA
0.0
12.2 KV
13 KV
ComEd # 2 MVA
10.8
Circuit # 1 MVA
2.4
SCENARIO 6
Circuit # 2 MVA
7.9
CTA/Metra Connection # 1 MVA
2.4
12.2 KV
12.2 KV
CTA/Metra Connection # 2 MVA
-2.9
CTA/Metra MVA
0.5

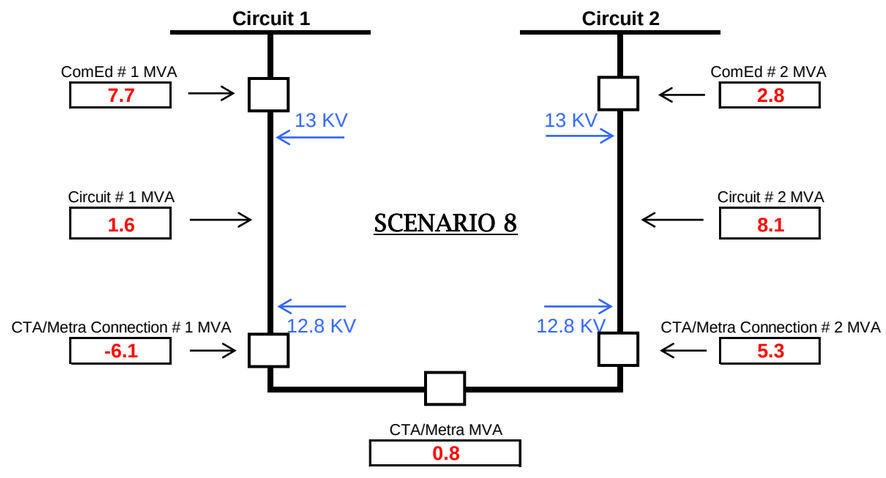
Circuit 1
Circuit 2
ComEd # 1 MVA
7.7
13 KV
13 KV
ComEd # 2 MVA
2.8
Circuit # 1 MVA
1.6
SCENARIO 8
Circuit # 2 MVA
8.1
CTA/Metra Connection # 1 MVA
-6.1
12.8 KV
12.8 KV
CTA/Metra Connection # 2 MVA
5.3
CTA/Metra MVA
0.8

H CTA CYME Study Information

- [redacted], [redacted], [redacted], assumed load demand [redacted], [redacted] (other transformer at same location in CIMS is showing [redacted], one is assumed for this transformer). Load is obtained from CIMS for [redacted] via accounts tied to transformer in [redacted].

- [redacted], [redacted] load obtained from CIMS for [redacted] assumed to be equally distributed between two transformers [redacted], [redacted] – [redacted], [redacted] for each of them. Load is obtained from CIMS for [redacted] via accounts tied to transformer in SBT.

- [redacted], [redacted] two transformers [redacted], [redacted] – with name plate [redacted], assumption that they are loaded [redacted]% or [redacted], PF=[redacted] each.

- [redacted] substation load obtained from CEDAR for [redacted], [redacted] is [redacted] KW (for each feeding line [redacted] with [redacted]).

- [redacted] APT load information used.
  - [redacted] APT selected load date [redacted], [redacted]
  - [redacted] APT actual load on [redacted]: [redacted]/[redacted]/[redacted] ➔ [redacted]
  - [redacted] APT WA on selected load date: [redacted]
  - [redacted] WA load: [redacted]/[redacted]/[redacted] ➔ [redacted]

- [redacted] APT load information used.
  - [redacted] APT selected load date: [redacted], [redacted]
  - [redacted] APT actual load on [redacted]: [redacted]/[redacted]/[redacted] ➔ [redacted]
  - [redacted] APT WA on selected load date: [redacted]
  - [redacted] WA load: [redacted]/[redacted]/[redacted] ➔ [redacted]

- [redacted] load allocation method
  - Enter in the CYME model all transformer, ESS loads, including [redacted] for each bus at [redacted] per LFM and CIMS meter information
  - Enter feeders peak load: [redacted], WA for [redacted] and [redacted], WA for [redacted] in the model.
  - Allocate load downstream for all model in accord to the peak feeders load with breaker open at [redacted] (zero point).
  - Ignore motors.
  - Adjust pf at source and allocate to obtain an adjusted load PF of [redacted] – [redacted]% on both feeders.
  - Close breaker at [redacted] after allocation.
  - Run analysis.

- Endpoints of both circuits are defined as located next to [redacted]

- Midpoints for [redacted] defined as located in between two overhead taps south from [redacted], for circuit [redacted] next to the tap toward [redacted]

H CTA CYME Study Results

Scenario	@ CTA - Connection #1 (MVA)	@ CTA - Connection #2 (MVA)	@ ComEd - Circuit #1 (MVA)	@ ComEd - Circuit #2 (MVA)	@ CTA - Connection #1 (kV)	@ CTA - Connection #2 (kV)	@ ComEd - Circuit #1 (kV)	@ ComEd - Circuit #2 (kV)	@ ComEd - Circuit #1 Midpoint (kV)	@ ComEd - Circuit #2 Midpoint (kV)	@ ComEd - Circuit #1 Endpoint (kV)	@ ComEd - Circuit #1 Endpoint (kV)
1	-4.2	+3.4	+5.7	+4.7	12.9	12.9	13.0	13.0	12.9	12.7	12.9	13.0
2	0	-0.8	0	+9.2	0	12.3	0	13.0	0	12.4	0	12.3
3	0	-0.8	+2.6	+9.2	13.0	12.3	13.0	13.0	13.0	12.4	13.0	12.4
4	-0.8	0	+3.0	0	13.0	0	13.0	0	13.0	0	13.0	0
5	-0.8	0	+3.0	+8.2	13.0	12.5	13.0	13.0	13.0	12.5	13.0	12.5
6	+2.4	-2.9	0	+10.8	12.2	12.2	12.2	13.0	12.2	12.3	12.2	12.2
7	-8.9	+8.1	+10.6	0	12.7	12.7	13.0	12.3	12.8	12.4	12.7	12.7
8	-6.1	+5.2	+7.7	+2.7	12.8	12.8	13.0	13.0	12.9	12.6	12.8	12.8

Scenario:

- Scenario 1: @ CTA connection #1 and #2 closed, @ ComEd circuit #1 and #2 closed. This represents the normal condition.
- Scenario 2: @ CTA connection #1 open and #2 closed, @ ComEd circuit #1 open and #2 closed. This represents an outage of ComEd circuit #1.
- Scenario 3: @ CTA connection #1 and bus tie open and #2 closed, @ ComEd circuit #1 and #2 closed. This represents an outage of CTA/Metra Bus #1.
- Scenario 4: @ CTA connection #1 closed and #2 open, @ ComEd circuit #1 closed and #2 open. This represents an outage of ComEd circuit #2.
- Scenario 5: @ CTA connection #1 closed and #2 and bus tie open, @ ComEd circuit #1 and #2 closed. This represents an outage of CTA/Metra Bus #2.

- Scenario 6: @ CTA connection #1 and #2 closed, @ ComEd circuit #1 open and #2 closed. This represents loss of source for ComEd circuit #1.

- Scenario 7: @ CTA connection #1 and #2 closed, @ ComEd circuit #1 closed and #2 open. This represents loss of source for ComEd circuit #2.

- Scenario 8: @ CTA connection #1 and #2 closed, @ ComEd circuit #1 and #2 closed. Breaker at [redacted], fed by [redacted] is open. This represents loss of source [redacted] to [redacted] [redacted]circuit #2.

CONFIDENTIAL AND PROPRIETARY - CEII

H SUBSTATION

HH CYME Study Results

Scenario	CTA Connection #1 (MVA)	CTA Connection #2 (MVA)	SS Connection #1 (MVA)	SS Connection #2 (MVA)	ComEd Circuit #1 (MVA)	ComEd Circuit #2 (MVA)	CTA Connection #1 (kV)	CTA Connection #2 (kV)	SS Connection #1 (kV)	SS Connection #2 (kV)	ComEd Circuit #1 (kV)	ComEd Circuit #2 (kV)
1	1.8	-3.8	-5.8	-1.0	5.8	6.3	12.9	12.9	12.9	12.9	12.9	13.0
2	7.5	-9.6	0.0	-6.7	0.0	12.2	12.7	12.7	0.0	12.7	0.0	13.0
3	0.0	-2.0	-6.8	0.0	6.8	4.5	0.0	12.9	12.8	0.0	13.0	13.0
4	0.8	-2.9	0.0	0.0	0.0	5.3	12.9	12.9	13.0	13.0	13.0	13.0
5	0.0	-2.0	-7.6	0.8	7.6	4.5	12.8	12.9	12.8	12.8	13.0	13.0
6	7.5	-9.6	0.0	-6.7	0.0	12.2	12.7	12.7	12.7	12.7	12.7	13.0
7	-2.0	0.0	-9.6	2.9	9.7	0.0	12.8	0.0	12.8	12.8	13.0	0.0
8	-2.0	0.0	-9.6	2.9	9.7	2.4	12.8	13.0	12.8	12.8	13.0	13.0
9	-4.5	2.4	-12.0	5.3	12.2	0.0	12.7	12.7	12.7	12.7	13.0	12.7

HH Cyme Results Comparison

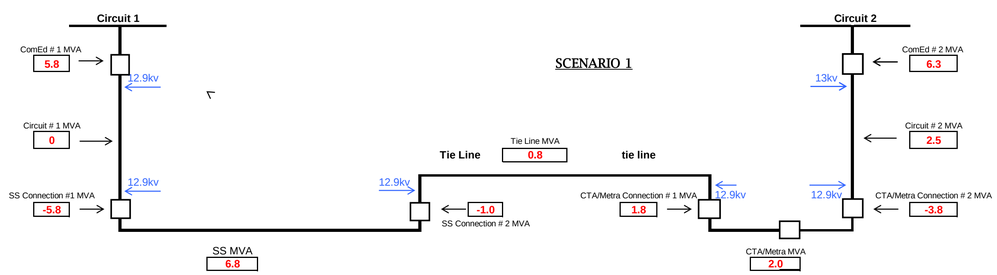

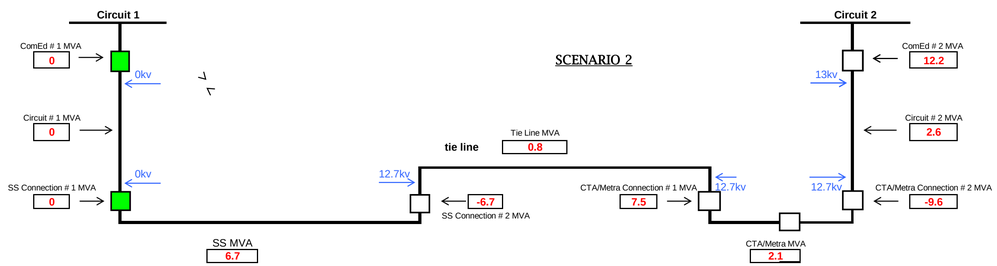

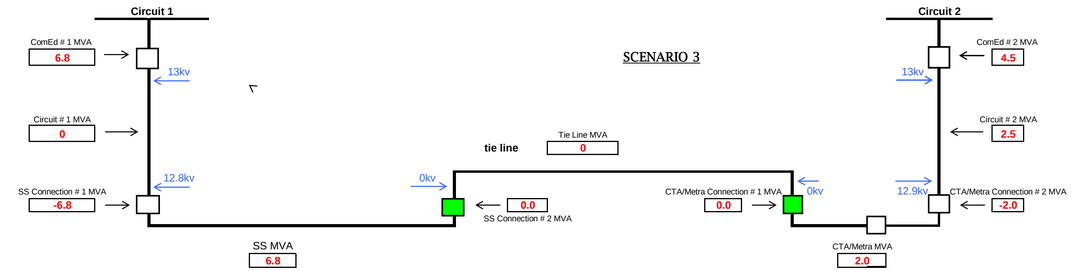

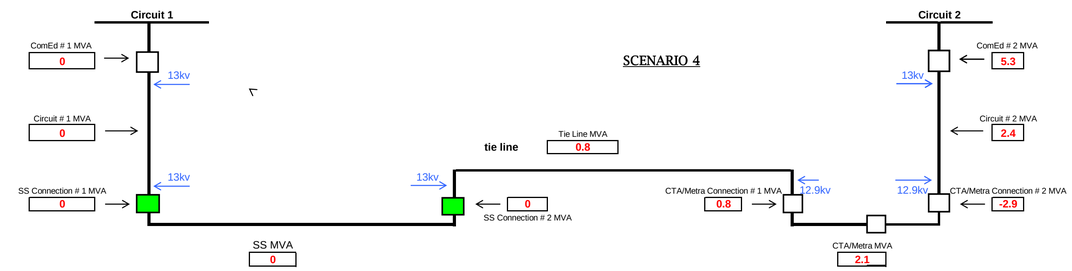

SCENARIO 5

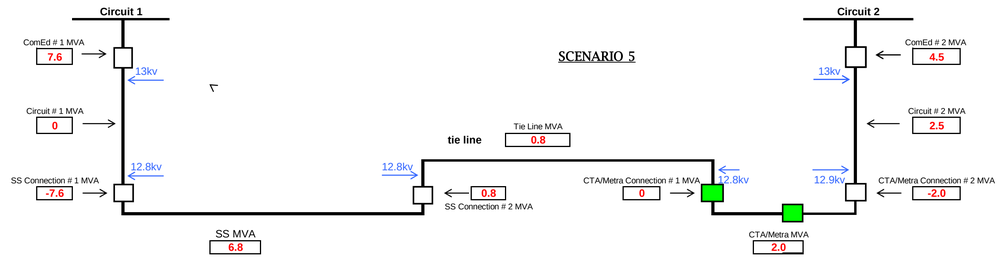

SCENARIO 6

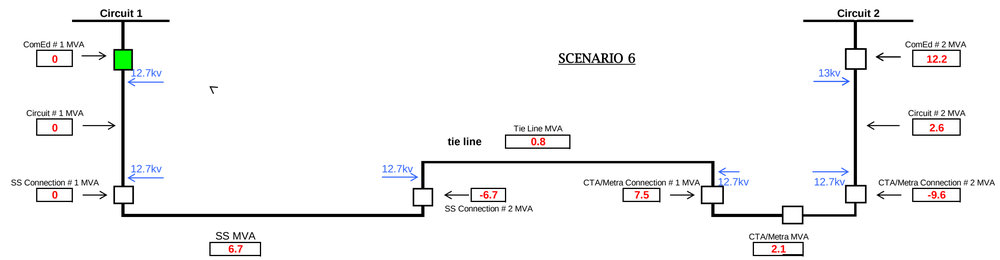

SCENARIO 7

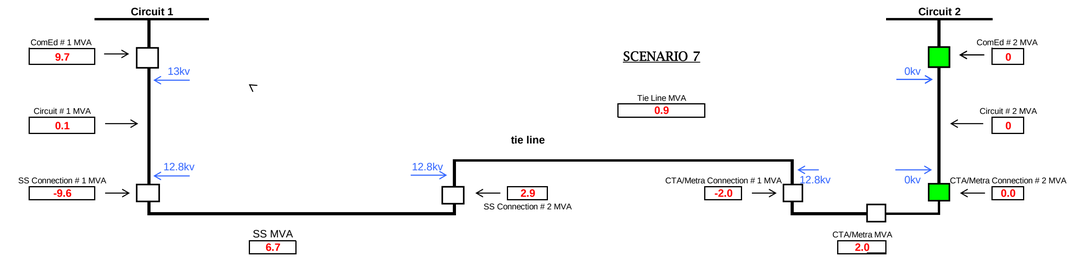

SCENARIO 8

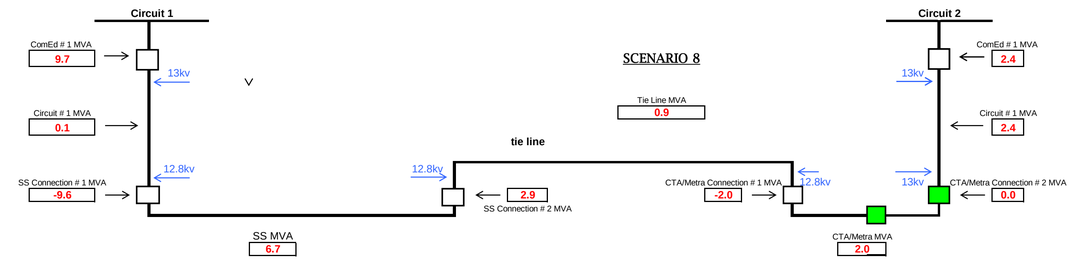

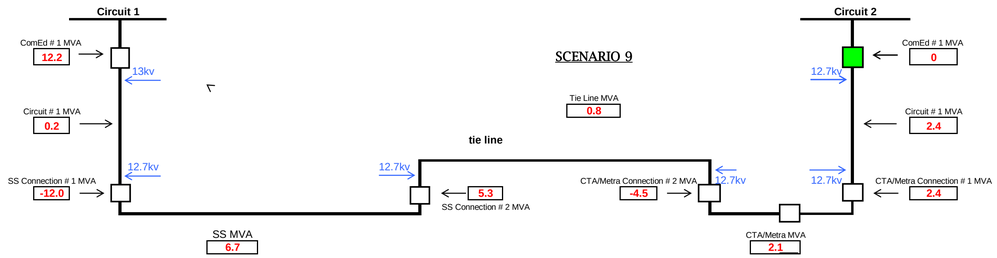
SCENARIO 9
Circuit 1
Circuit 2
ComEd # 1 MVA
12.2
13kv
Circuit # 1 MVA
0.2
SS Connection # 1 MVA
-12.0
12.7kv
SS MVA
6.7
12.7kv
5.3
SS Connection # 2 MVA
tie line
Tie Line MVA
0.8
CTA/Metra Connection # 2 MVA
-4.5
12.7kv
CTA/Metra MVA
2.1
ComEd # 1 MVA
0
12.7kv
Circuit # 1 MVA
2.4
12.7kv
CTA/Metra Connection # 1 MVA
2.4

HH CTA CYME Study Information

- [redacted] assumed load demand [redacted] kW at PF [redacted] for each line (From load information provided by Cedar).

- [redacted] assumed load demand at [redacted] = [redacted] W at PF [redacted] & at [redacted] = [redacted] kw at PF [redacted] (From load information provided by CIMS).

- [redacted] APT load information used.
  - [redacted] APT selected load date: [redacted]
  - [redacted] APT actual load on [redacted]
  - [redacted] APT WA on selected load date: [redacted]
  - [redacted] WA load: [redacted]

- [redacted] APT load information used.
  - [redacted] APT selected load date: [redacted]
  - [redacted] APT actual load on [redacted]
  - [redacted] APT WA on selected load date: [redacted]
  - [redacted] WA load: [redacted]

- [redacted] load becomes part of [redacted]

- [redacted] APT load information used.
  - [redacted] APT selected load date: [redacted]
  - [redacted] APT actual load on [redacted]
  - [redacted] APT WA on selected load date: [redacted]
  - [redacted] WA load: [redacted]

- [redacted] APT load information used.
  - [redacted] APT selected load date: [redacted]
  - [redacted] APT actual load on [redacted]
  - [redacted] APT WA on selected load date: [redacted]
  - [redacted] WA load: [redacted]

- [redacted] load allocation method
  - Validate in the CYME model all transformers, ESS loads, including [redacted] kW for each feeding line at [redacted] per Cedar meter information.
  - Open [redacted] bus tie breaker, (i.e., assumed zero point of the network). This allowed for proper load allocation on the feeders.
  - Enter feeder loads: [redacted] A for [redacted] (Avg. WA [redacted] A plus the [redacted] A from [redacted] & entered [redacted] A for [redacted] (Avg. WA [redacted] A minus the [redacted] A to [redacted]

- Power factor of [redacted] for [redacted] and [redacted] was used during allocation so as to obtain an adjusted load PF of [redacted] on all feeders.
- Ignore motors.
- Open zero-point [redacted] bus tie breaker and allocate the loads.
- Close zero-point and run analysis.

- Physical midpoint kV on feeder [redacted] is taken at section 489236147 and the endpoint kV is taken at section 489170003.

- Physical midpoint kV on feeder [redacted] is taken at section 489236308 and the endpoint kV is taken at section 489148591 or 489176186

- Physical endpoint kV on feeder [redacted] is taken at section 489176186.

HH CYME Study Results

Scenario	@ CTA -Connection #1 (MVA)	@ CTA - Connection #2 (MVA)	@ SS- -Connection #1 (MVA)	@ SS- - Connection#2 (MVA)	@ ComEd - Circuit #1 (MVA)	@ ComEd - Circuit #2 (MVA)	@ CTA -Connection #1 (kV)	@ CTA -Connection #2 (kV)	@ ComEd - Circuit #1 (kV)	@ ComEd - Circuit #2 (kV)	@ ComEd - Circuit #1 Midpoint (kV)	@ ComEd - Circuit #2 Midpoint (kV)	@ ComEd - Circuit #1 Endpoint (kV)	@ ComEd - Circuit Endpoint (kV)
1	1.8	-3.8	-5.8	-1.0	5.8	6.3	12.9	12.9	12.9	13.0	13.0	12.9	12.9	12.9
2	7.5	-9.6	0.0	-6.7	0.0	12.2	12.7	12.7	0.0	13.0	0.0	12.8	0.0	12.8
3	0.0	-2.0	-6.8	0.0	6.8	4.5	0.0	12.9	13.0	13.0	13.0	12.9	13.0	0.0
4	0.8	-2.9	0.0	0.0	0.0	5.3	12.9	12.9	13.0	13.0	13.0	12.9	13.0	12.9
5	0.0	-2.0	-7.6	0.8	7.6	4.5	12.8	12.9	13.0	13.0	12.9	12.9	12.8	12.8
6	7.5	-9.6	0.0	-6.7	0.0	12.2	12.7	12.7	12.7	13.0	12.7	12.8	12.7	12.7
7	-2.0	0.0	-9.6	2.9	9.7	0.0	12.8	0.0	13.0	0.0	12.8	0.0	12.8	12.7
8	-2.0	0.0	-9.6	2.9	9.7	2.4	12.8	13.0	13.0	13.0	12.8	13.0	12.8	12.7
9	-4.5	2.4	-12.0	5.3	12.2	0.0	12.7	12.7	13.0	12.7	12.8	12.7	12.7	12.7

Scenario:

Scenario 1: @ CTA/Metra connection #1 and #2 closed, @ ComEd circuit #1 and #2 closed. This represents the normal condition.

Scenario 2: @ CTA/Metra connection #1 and #2 closed, @ ComEd circuit #1 open and #2 closed, @ SS connection #1 open and #2 closed. This represents an outage of ComEd circuit #1.

Scenario 3: @ CTA/Metra connection #1 open and #2 closed, @ ComEd circuit #1 and #2 closed, @ SS connection #1 closed and #2 open This represents an outage of Comed tie line.

Scenario 4: @ CTA/Metra connection #1 and #2 closed, @ ComEd circuit #1 and #2 closed, @SS connection #1 and #2 open This represents an outage of ComEd bus at SS884.

Scenario 5: @ CTA/Metra connection #1 and bus tie open and #2 closed, @ ComEd circuit #1 and #2 closed. This represents an outage of CTA/Metra Bus #1.

Scenario 6: @ CTA/Metra connection #1 and #2 closed, @ ComEd circuit #1 open and #2 closed. This represents loss of source for ComEd circuit #1.

Scenario 7: @ CTA/Metra connection #1 and #2 open, @ ComEd circuit #1 closed and #2 open. This represents an outage of ComEd circuit #2.

Scenario 8: @ CTA/Metra connection #1 and #2 and bus tie open, @ ComEd circuit #1 and #2 closed. This represents loss of source for CTA/METRA Bus #2.

Scenario 9: @ CTA/Metra connection #1 and #2 closed, @ ComEd circuit #1 closed and #2 open. This represents loss of source for ComEd circuit #2.

CONFIDENTIAL AND PROPRIETARY - CEII

HH SUBSTATION

HHH CYME Study Results

Scenario	@ CTA / Metra - Connection #1 (MVA)	@ CTA / Metra - Connection #2 (MVA)	@ ComEd - Circuit #1 (MVA)	@ ComEd - Circuit #2 (MVA)	@ CTA / Metra - Connection #1 (kV)	@ CTA / Metra - Connection #2 (kV)	@ ComEd - Circuit #1 (kV)	@ ComEd - Circuit #2 (kV)
1	-0.8	-0.1	5.2	4.8	13.0	13.0	13.0	13.0
2	0.0	-0.9	0.0	5.6	0.0	13.0	0.0	13.0
3	0.0	-0.9	4.4	5.6	13.0	13.0	13.0	13.0
4	-0.9	0.0	5.2	0.0	13.0	0.0	13.0	0.0
5	-0.9	0.0	5.2	4.7	13.0	13.0	13.0	13.0
6	4.4	-5.2	0.0	10.0	12.9	12.9	12.9	13.0
7	-5.5	4.7	10.0	0.0	12.9	12.9	13.0	12.9
8								

KV

HHH Cyme Results Comparison

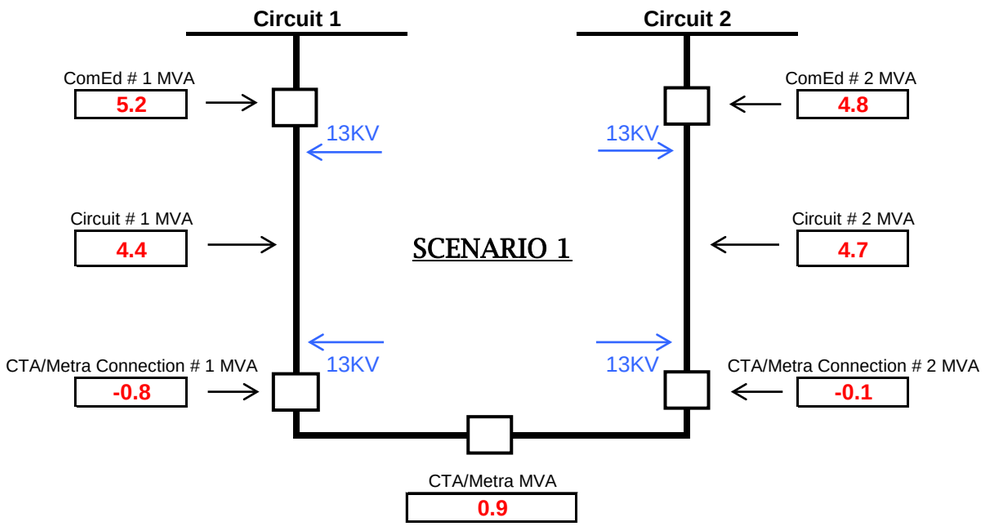

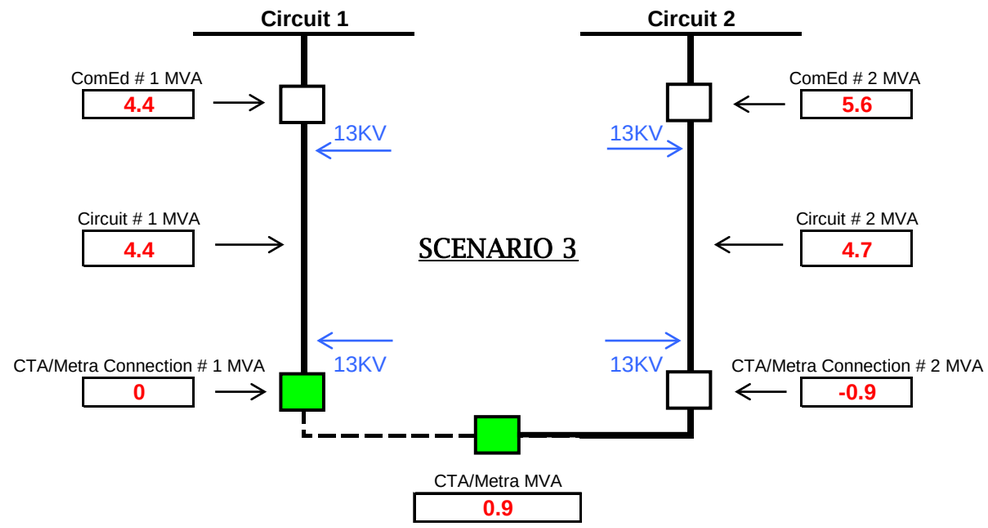

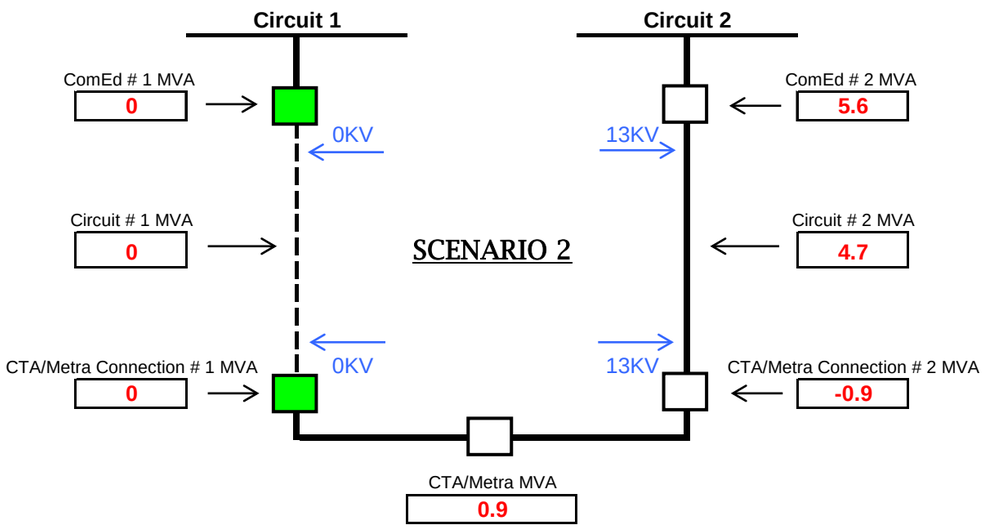

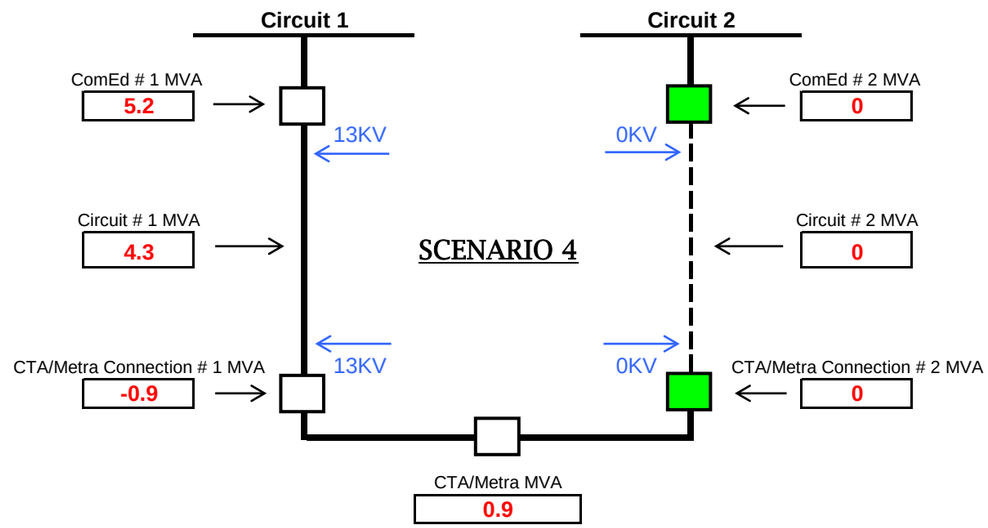

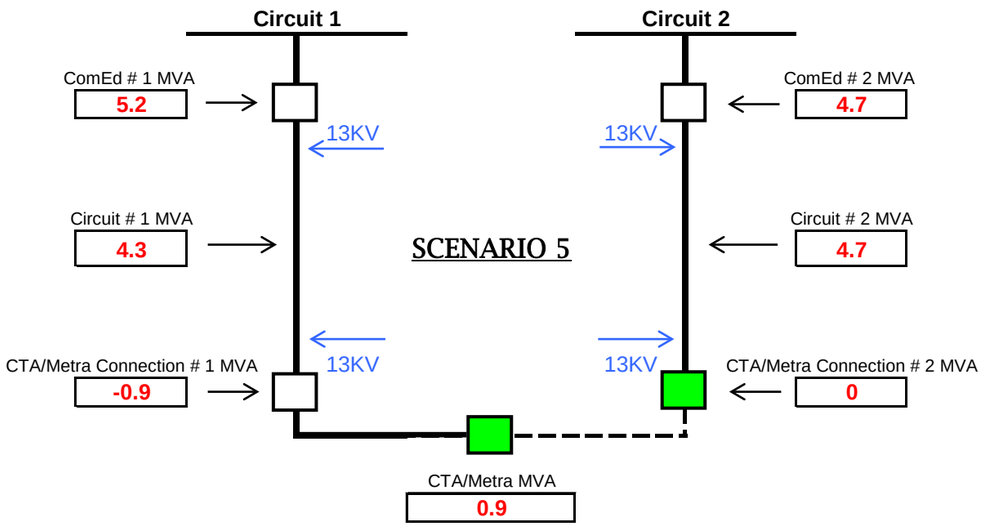
Circuit 1
Circuit 2
ComEd # 1 MVA
5.2
13KV
13KV
ComEd # 2 MVA
4.7
Circuit # 1 MVA
4.3
SCENARIO 5
Circuit # 2 MVA
4.7
13KV
13KV
CTA/Metra Connection # 1 MVA
-0.9
CTA/Metra Connection # 2 MVA
0
CTA/Metra MVA
0.9

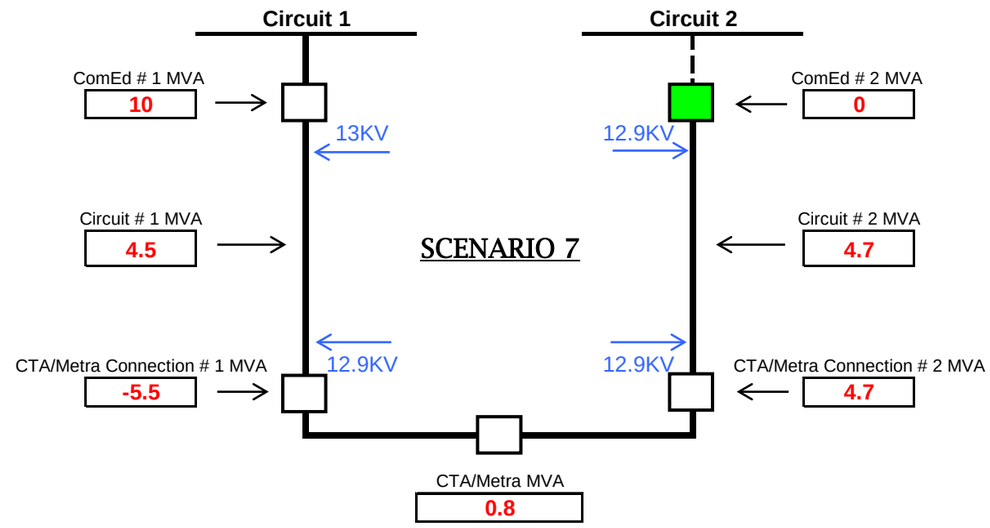
Circuit 1
Circuit 2
ComEd # 1 MVA
10
13KV
12.9KV
ComEd # 2 MVA
0
Circuit # 1 MVA
4.5
SCENARIO 7
Circuit # 2 MVA
4.7
12.9KV
12.9KV
CTA/Metra Connection # 1 MVA
-5.5
CTA/Metra Connection # 2 MVA
4.7
CTA/Metra MVA
0.8

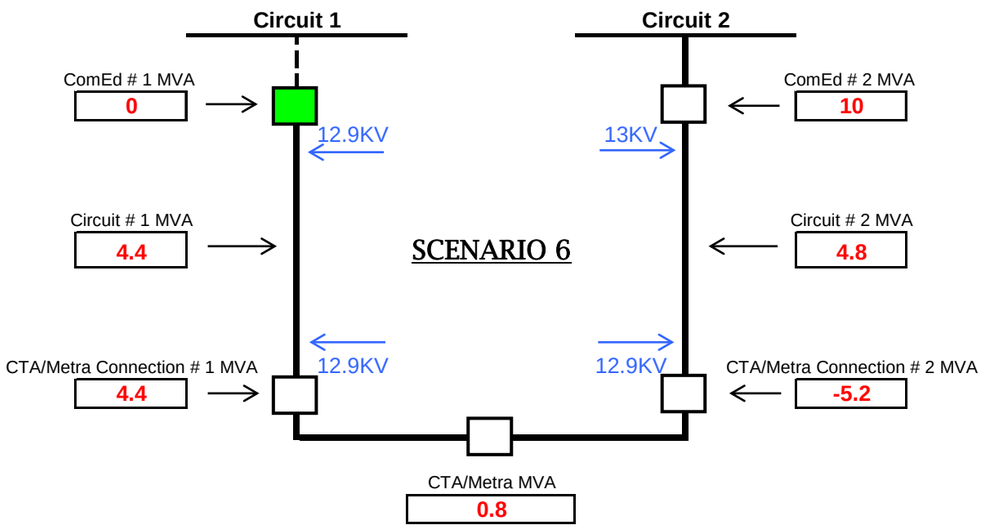
Circuit 1
Circuit 2
ComEd # 1 MVA
0
12.9KV
13KV
ComEd # 2 MVA
10
Circuit # 1 MVA
4.4
SCENARIO 6
Circuit # 2 MVA
4.8
12.9KV
12.9KV
CTA/Metra Connection # 1 MVA
4.4
CTA/Metra Connection # 2 MVA
-5.2
CTA/Metra MVA
0.8

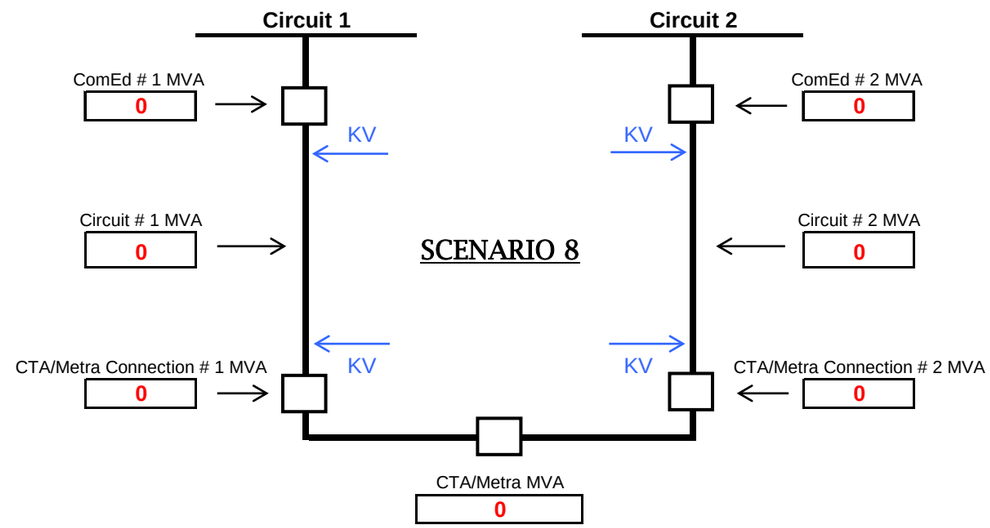
Circuit 1
Circuit 2
ComEd # 1 MVA
0
KV
KV
ComEd # 2 MVA
0
Circuit # 1 MVA
0
SCENARIO 8
Circuit # 2 MVA
0
KV
KV
CTA/Metra Connection # 1 MVA
0
CTA/Metra Connection # 2 MVA
0
CTA/Metra MVA
0

HHH CYME Study Information

- [redacted] substation load was obtained from Cedar Loads. Peak load for each feeding line is [redacted] with assumed PF=[redacted].

- [redacted] APT load information used.
  - [redacted] APT selected load date: [redacted]
  - [redacted] APT actual load on [redacted]
  - [redacted] APT WA on selected load date: [redacted]
  - [redacted] WA load: [redacted]

- [redacted] APT load information used.
  - [redacted] APT selected load date: [redacted]
  - [redacted] APT actual load on [redacted]
  - [redacted] APT WA on selected load date: [redacted]
  - [redacted] WA load: [redacted]

- [redacted] load allocation method
  - Open [redacted] breaker at [redacted] substation.
  - Allocate [redacted]
  - Allocate [redacted]
  - [redacted] is the [redacted] of flow from [redacted] with [redacted] WA at the zero point prior to radial load allocation.
  - Ignore motors.
  - Adjust PF at source ([redacted] PF for [redacted] and [redacted] PF for [redacted]) and allocate to obtain an adjusted load PF of [redacted] on both feeders ([redacted] PF for [redacted] and [redacted] PF for [redacted]).

  [redacted]Close [redacted] breaker at [redacted]

- [redacted] midpoint KV taken at overhead section 163445630 and endpoint KV taken at overhead section 211016488-7.

- [redacted] midpoint KV taken at overhead section 173171774-1 and endpoint KV taken at overhead section 219571073.

HHH CYME Study Results

Scenario	@ CTA -Connection #1 (MVA)	@ CTA - Connection #2 (MVA)	@ ComEd - Circuit #1 (MVA)	@ ComEd - Circuit #2 (MVA)	@ CTA -Connection #1 (kV)	@ CTA - Connection #2 (kV)	@ ComEd - Circuit #1 (kV)	@ ComEd - Circuit #2 (kV)	@ ComEd - Circuit #1 Midpoint (kV)	@ ComEd - Circuit #2 Midpoint (kV)	@ ComEd - Circuit #1 Endpoint (kV)	@ ComEd - Circuit #2 Endpoint (kV)
1	-0.8	-0.1	5.2	4.8	13.0	13.0	13.0	13.0	12.9	12.9	12.9	12.8
2	0	-0.9	0	5.6	0	13.0	0	13.0	0	12.9	0	12.8
3	0	-0.9	4.4	5.6	13.0	13.0	13.0	13.0	12.9	12.9	12.9	12.8
4	-0.9	0	5.2	0	13.0	0	13.0	0	12.9	0	12.9	0
5	-0.9	0	5.2	4.7	13.0	13.0	13.0	13.0	12.9	12.9	12.9	12.8
6	4.4	-5.2	0	10.0	12.9	12.9	12.9	13.0	12.8	12.8	12.8	12.7
7	-5.5	4.7	10.0	0	12.9	12.9	13.0	12.9	12.9	12.8	12.9	12.7

Scenario:

Scenario 1: @ CTA/Metra connection #1 and #2 closed, @ ComEd circuit #1 and #2 closed. This represents the normal condition.

Scenario 2: @ CTA/Metra connection #1 open and #2 closed, @ ComEd circuit #1 open and #2 closed. This represents an outage of ComEd circuit #1.

Scenario 3: @ CTA/Metra connection #1 and bus tie open and #2 closed, @ ComEd circuit #1 and #2 closed. This represents an outage of CTA/Metra Bus #1.

Scenario 4: @ CTA/Metra connection #1 closed and #2 open, @ ComEd circuit #1 closed and #2 open. This represents an outage of ComEd circuit #2.

Scenario 5: @ CTA/Metra connection #1 closed and #2 and bus tie open, @ ComEd circuit #1 and #2 closed. This represents an outage of CTA/Metra Bus #2.

Scenario 6: @ CTA/Metra connection #1 and #2 closed, @ ComEd circuit #1 open and #2 closed. This represents loss of source for ComEd circuit #1.

Scenario 7: @ CTA/Metra connection #1 and #2 closed, @ ComEd circuit #1 closed and #2 open. This represents loss of source for ComEd circuit #2.

CONFIDENTIAL AND PROPRIETARY - CEII

HHH SUBSTATION

I CYME Study Results

Scenario	@ CTA / Metra - Connection #1 (MVA)	@ CTA / Metra - Connection #2 (MVA)	@ ComEd - Circuit #1 (MVA)	@ ComEd - Circuit #2 (MVA)	@ CTA / Metra - Connection #1 (kV)	@ CTA / Metra - Connection #2 (kV)	@ ComEd - Circuit #1 (kV)	@ ComEd - Circuit #2 (kV)
1	-0.4	-1.5	4.6	3.9	12.4	12.4	12.4	12.5
2	0	-1.8	0	4.2	0	12.4	0	12.5
3	0	-1.8	4.3	4.2	12.4	12.4	12.4	12.5
4	-1.8	0	6.2	0	12.3	0	12.4	0
5	-1.8	0	6.2	2.5	12.3	12.5	12.4	12.5
6	4.3	-6.1	0	8.7	12.1	12.1	12.1	12.4
7	-4.2	2.5	8.6	0	12.3	12.3	12.4	12.2
8								

I Cyme Results Comparison

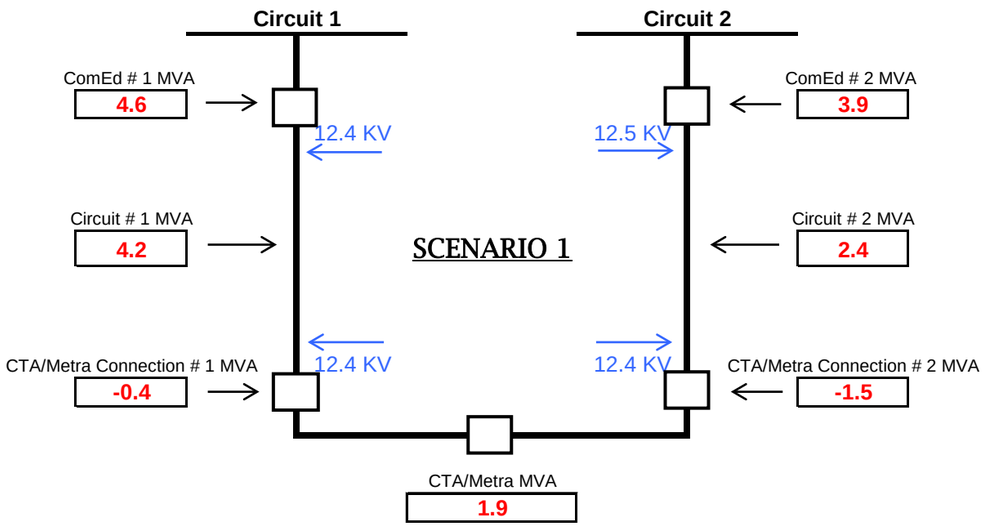

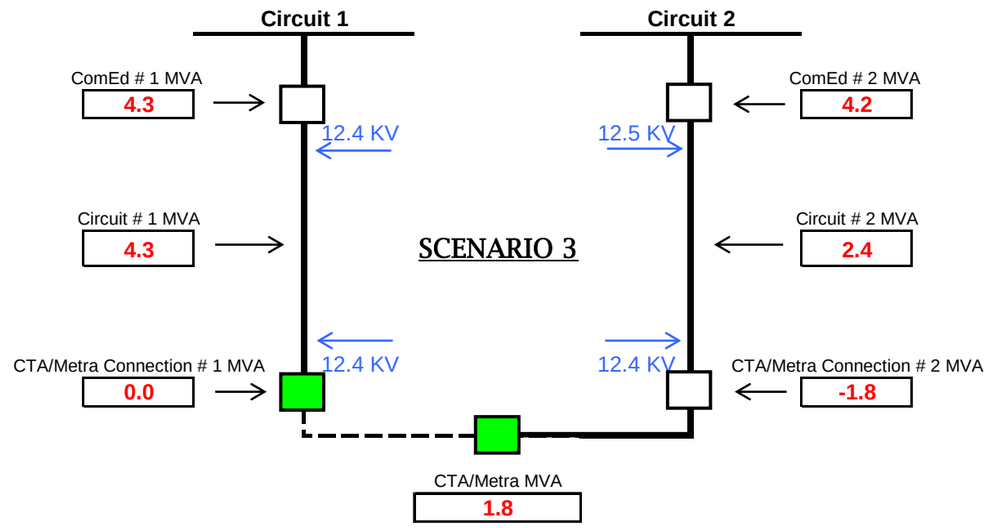

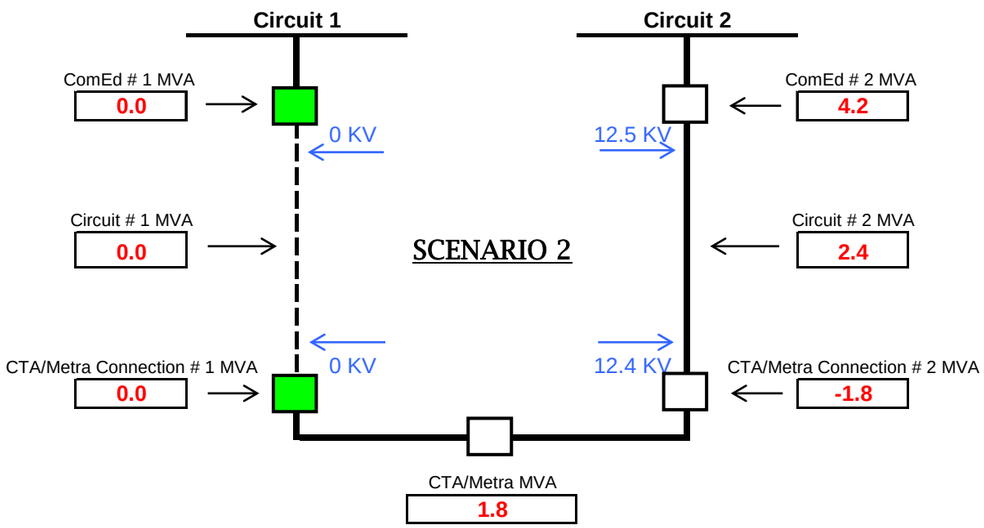

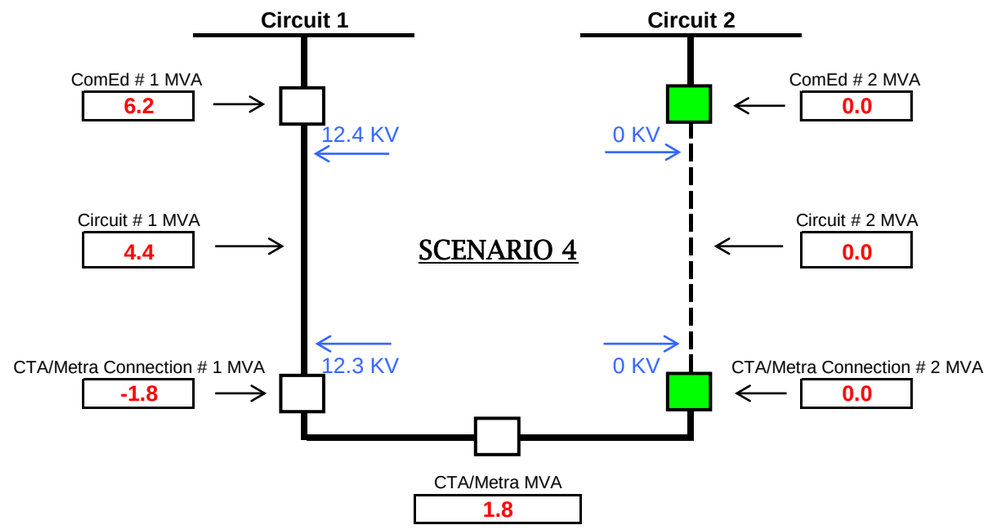

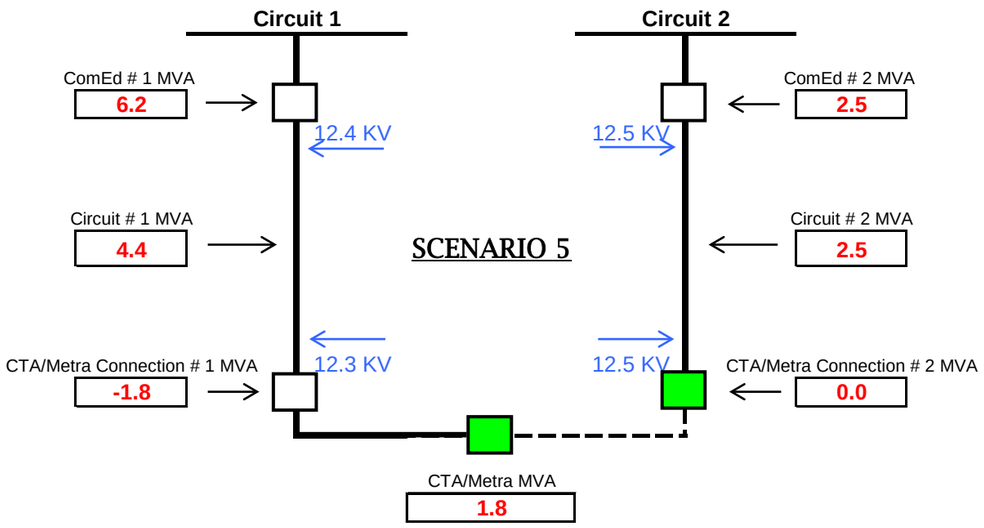
Circuit 1
Circuit 2
ComEd # 1 MVA
6.2
12.4 KV
12.5 KV
ComEd # 2 MVA
2.5
Circuit # 1 MVA
4.4
SCENARIO 5
Circuit # 2 MVA
2.5
CTA/Metra Connection # 1 MVA
-1.8
12.3 KV
12.5 KV
CTA/Metra Connection # 2 MVA
0.0
CTA/Metra MVA
1.8

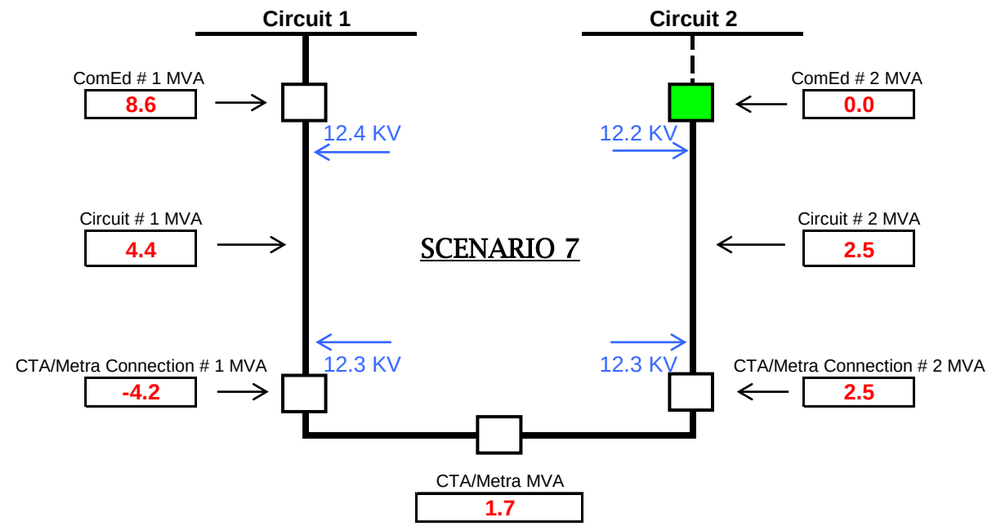
Circuit 1
Circuit 2
ComEd # 1 MVA
8.6
12.4 KV
12.2 KV
ComEd # 2 MVA
0.0
Circuit # 1 MVA
4.4
SCENARIO 7
Circuit # 2 MVA
2.5
CTA/Metra Connection # 1 MVA
-4.2
12.3 KV
12.3 KV
CTA/Metra Connection # 2 MVA
2.5
CTA/Metra MVA
1.7

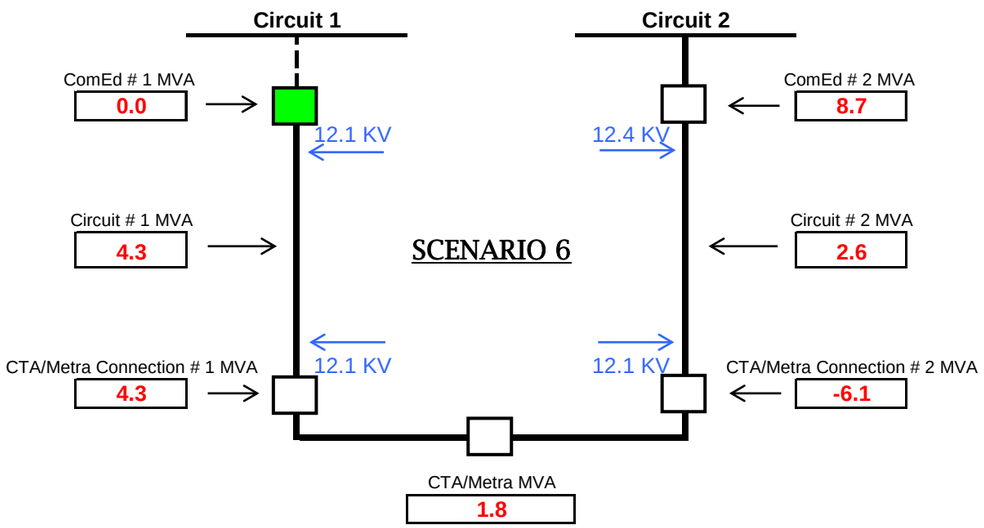
Circuit 1
Circuit 2
ComEd # 1 MVA
0.0
12.1 KV
12.4 KV
ComEd # 2 MVA
8.7
Circuit # 1 MVA
4.3
SCENARIO 6
Circuit # 2 MVA
2.6
CTA/Metra Connection # 1 MVA
4.3
12.1 KV
12.1 KV
CTA/Metra Connection # 2 MVA
-6.1
CTA/Metra MVA
1.8

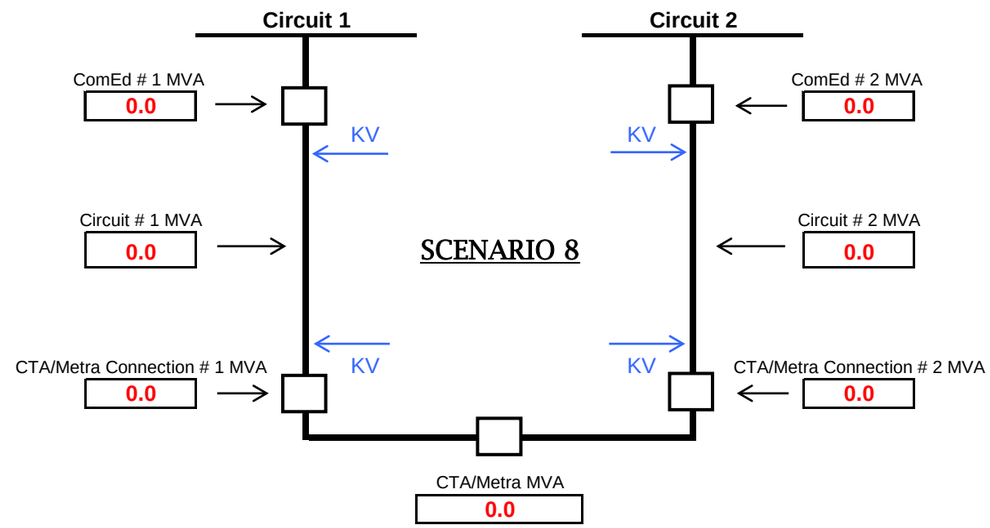
Circuit 1
Circuit 2
ComEd # 1 MVA
0.0
KV
KV
ComEd # 2 MVA
0.0
Circuit # 1 MVA
0.0
SCENARIO 8
Circuit # 2 MVA
0.0
CTA/Metra Connection # 1 MVA
0.0
KV
KV
CTA/Metra Connection # 2 MVA
0.0
CTA/Metra MVA
0.0

I-CYME Study Information

- [redacted] TR#[redacted] and TR#[redacted] had actual load discrepancies. TR#[redacted], [redacted] KVA B-phase transformer had [redacted] KVA of demand load and TR#[redacted], [redacted] KVA 3-phase transformer had [redacted] KVA of demand load. From CIMS, multiple meters for [redacted] are tied to TR#[redacted] of connected KVA was used as demand load for TR#[redacted] and TR#[redacted]

- TR#[redacted], in [redacted], and TR#[redacted], in [redacted], are tied to primary meter [redacted]. Demand load for both transformers obtained from CIMS for [redacted] (KW with .[redacted] pf) and entered at the primary meter in CYME.

- TR#[redacted], in [redacted], is tied to primary meter [redacted]. Demand load for transformer obtained from CIMS for [redacted] (KW with .[redacted]) and entered at the primary meter in CYME.

- [redacted] of [redacted] TR#[redacted] ([redacted] KVA) and TR#[redacted] ([redacted] KVA) updated with load extracted from Hyperion, combined, and added a single spot load location.

- [redacted] substation load obtained from CEDAR for [redacted] (KW with .[redacted] pf).

- [redacted] APT load information used.
  - [redacted] APT selected load date: [redacted]
  - [redacted] APT actual load on [redacted]: [redacted] A ➔ [redacted] A
  - [redacted] APT WA on selected load date: [redacted]
  - [redacted] WA load: [redacted] A ➔ [redacted] A

- [redacted] APT load information used.
  - [redacted] APT selected load date: [redacted]
  - [redacted] APT actual load on [redacted]: [redacted] ➔ [redacted] A
  - [redacted] APT WA on selected load date: [redacted]
  - [redacted] WA load: [redacted] A ➔ [redacted] A

- [redacted] load allocation method
  - Open bus tie at [redacted] substation
  - Allocate [redacted] A ([redacted] A plus [redacted] A) on [redacted].
  - Allocate [redacted] A ([redacted] minus [redacted] A) on [redacted].
  - [redacted] A is the [redacted] A of flow from [redacted] with [redacted] WA at the zero point prior to radial load allocation.
  - Ignore motors
  -

- Adjust pf at source [redacted] pf for [redacted], .[redacted] pf for [redacted]) and allocate to obtain an adjusted load PF of [redacted]% on both feeders (.[redacted] for [redacted], .[redacted] for [redacted]).
- Close bus tie at [redacted] and run analysis.

- [redacted] midpoint KV taken at cable section 403319622 and endpoint KV taken at section before the [redacted] breaker.

- [redacted] midpoint KV taken at cable section 195799216 and endpoint KV taken at overhead section 198455642.

I- CYME Study Results

Scenario	@ CTA -Connection #1 (MVA)	@ CTA - Connection #2 (MVA)	@ ComEd - Circuit #1 (MVA)	@ ComEd - Circuit #2 (MVA)	@ CTA -Connection #1 (kV)	@ CTA - Connection #2 (kV)	@ ComEd - Circuit #1 (kV)	@ ComEd - Circuit #2 (kV)	@ ComEd - Circuit #1 Midpoint (kV)	@ ComEd - Circuit #2 Midpoint (kV)	@ ComEd - Circuit #1 Endpoint (kV)	@ ComEd - Circuit #2 Endpoint (kV)
1	-0.4	-1.5	+4.6	+3.9	12.4	12.4	12.4	12.5	12.4	12.4	12.4	12.4
2	0.0	-1.8	0.0	+4.2	0.0	12.4	0.0	12.5	0.0	0.0	12.4	12.4
3	0.0	-1.8	+4.3	+4.2	12.4	12.4	12.4	12.5	12.4	12.4	12.4	12.4
4	-1.8	0.0	+6.2	0.0	12.3	0.0	12.4	0.0	12.3	0.0	12.3	0.0
5	-1.8	0.0	+6.2	+2.5	12.3	12.5	12.4	12.5	12.3	12.3	12.5	12.5
6	+4.3	-6.1	0.0	+8.7	12.1	12.1	12.1	12.4	12.1	12.3	12.1	12.3
7	-4.2	+2.5	+8.6	0.0	12.3	12.3	12.4	12.2	12.3	12.2	12.3	12.3

Scenario:

Scenario 1: @ CTA/Metra connection #1 and #2 closed, @ ComEd circuit #1 and #2 closed. This represents the normal condition.

Scenario 2: @ CTA/Metra connection #1 open and #2 closed, @ ComEd circuit #1 open and #2 closed. This represents an outage of ComEd circuit #1.

Scenario 3: @ CTA/Metra connection #1 and bus tie open and #2 closed, @ ComEd circuit #1 and #2 closed. This represents an outage of CTA/Metra Bus #1.

Scenario 4: @ CTA/Metra connection #1 closed and #2 open, @ ComEd circuit #1 closed and #2 open. This represents an outage of ComEd circuit #2.

Scenario 5: @ CTA/Metra connection #1 closed and #2 and bus tie open, @ ComEd circuit #1 and #2 closed. This represents an outage of CTA/Metra Bus #2.

Scenario 6: @ CTA/Metra connection #1 and #2 closed, @ ComEd circuit #1 open and #2 closed. This represents loss of source for ComEd circuit #1.

Scenario 7: @ CTA/Metra connection #1 and #2 closed, @ ComEd circuit #1 closed and #2 open. This represents loss of source for ComEd circuit #2.

CONFIDENTIAL AND PROPRIETARY - CEII

I- SUBSTATION

II - CYME Study Results

Scenario	@ CTA / Metra - Connection #1 (MVA)	@ CTA / Metra - Connection #2 (MVA)	@ ComEd - Circuit #1 (MVA)	@ ComEd - Circuit #2 (MVA)	@ CTA / Metra - Connection #1 (kV)	@ CTA / Metra - Connection #2 (kV)	@ ComEd - Circuit #1 (kV)	@ ComEd - Circuit #2 (kV)
1	-0.8	-0.5	3.3	4.3	12.9	12.9	13.0	13.0
2	0.0	-1.3	0.0	5.1	0.0	12.9	0.0	13.0
3	0.0	-1.3	2.5	5.1	13.0	12.9	13.0	13.0
4	-1.3	0.0	3.8	0.0	12.9	0.0	13.0	0.0
5	-1.3	0.0	3.8	3.8	12.9	13.0	13.0	13.0
6	2.5	-3.8	0.0	7.7	12.8	12.8	12.8	13.0
7	-5.0	3.7	7.6	0.0	12.8	12.8	13.0	12.7
8								

II Cyme Results Comparison

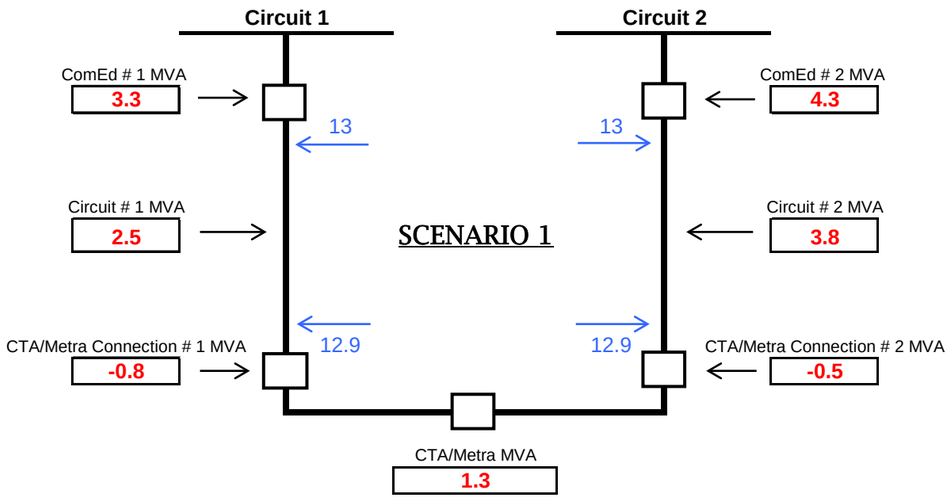

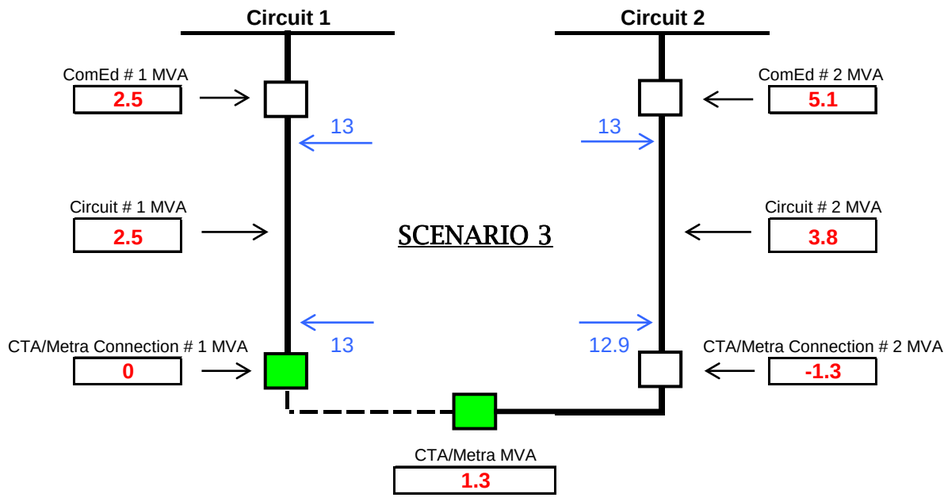

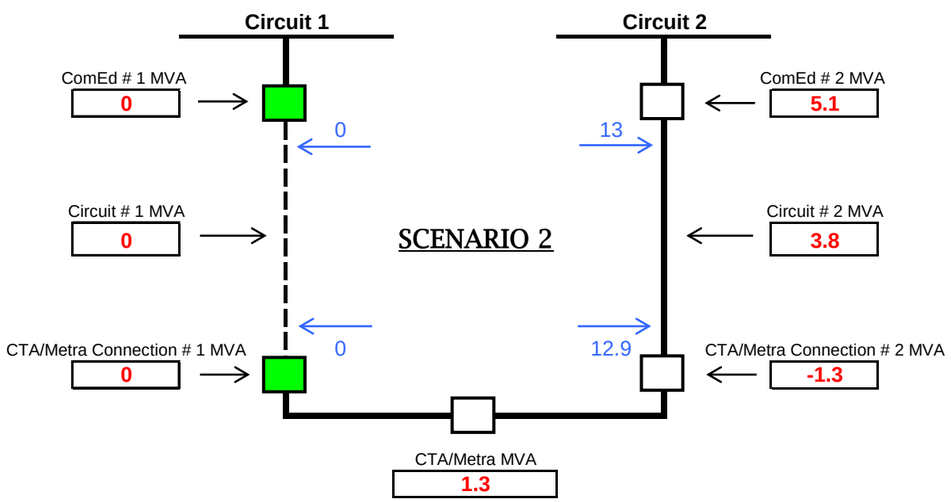

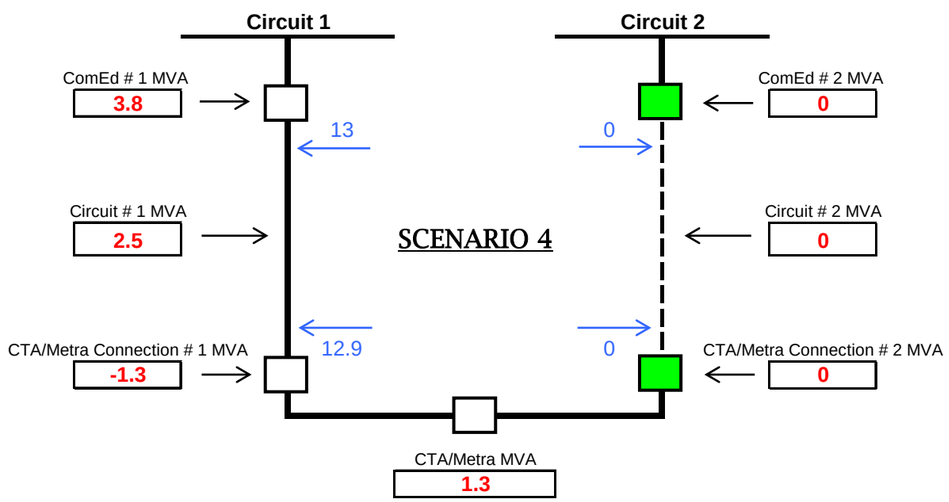

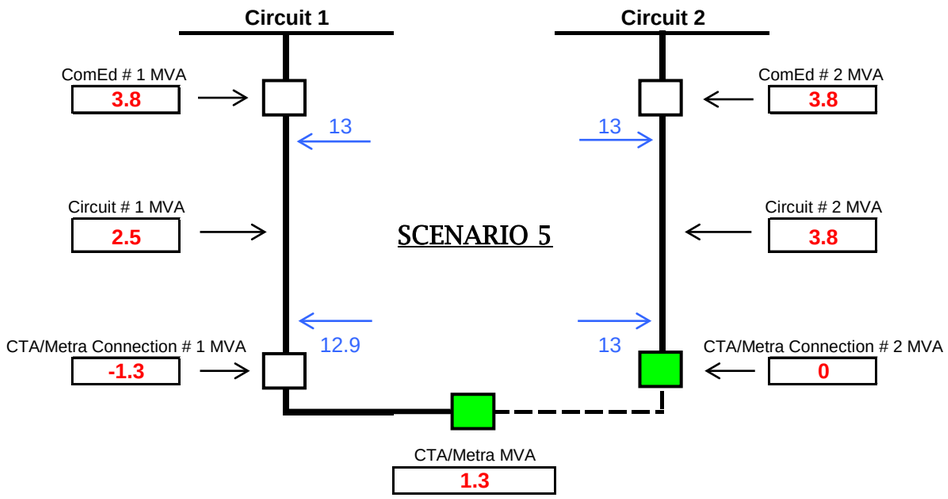
Circuit 1
Circuit 2
ComEd # 1 MVA
3.8
ComEd # 2 MVA
3.8
13
13
Circuit # 1 MVA
2.5
SCENARIO 5
Circuit # 2 MVA
3.8
12.9
13
CTA/Metra Connection # 1 MVA
-1.3
CTA/Metra Connection # 2 MVA
0
CTA/Metra MVA
1.3

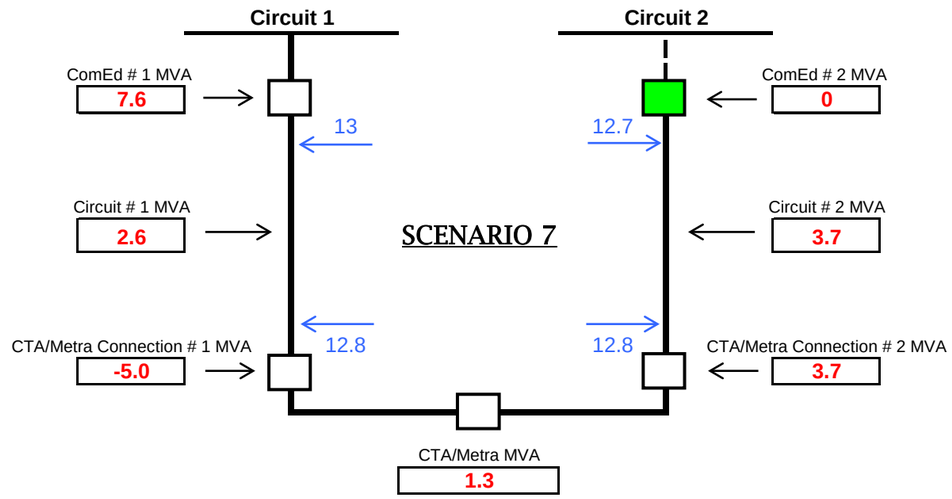
Circuit 1
Circuit 2
ComEd # 1 MVA
7.6
ComEd # 2 MVA
0
13
12.7
Circuit # 1 MVA
2.6
SCENARIO 7
Circuit # 2 MVA
3.7
12.8
12.8
CTA/Metra Connection # 1 MVA
-5.0
CTA/Metra Connection # 2 MVA
3.7
CTA/Metra MVA
1.3

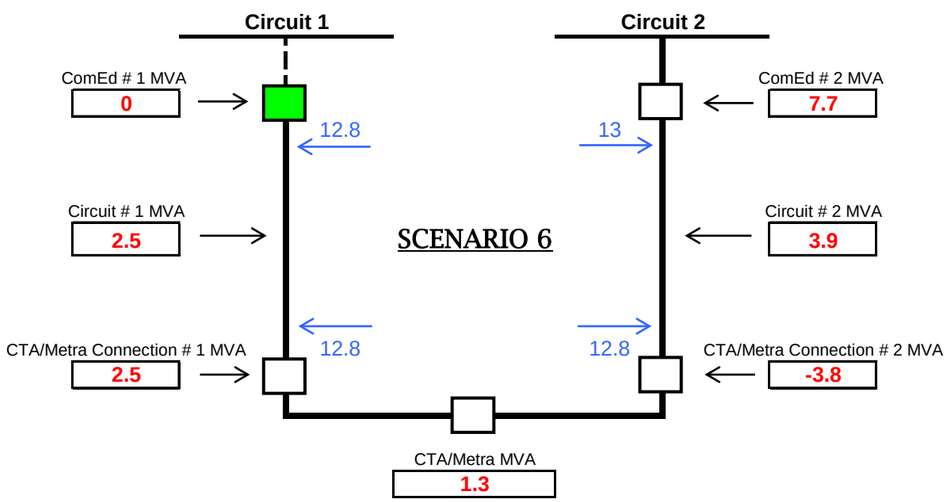
Circuit 1
Circuit 2
ComEd # 1 MVA
0
ComEd # 2 MVA
7.7
12.8
13
Circuit # 1 MVA
2.5
SCENARIO 6
Circuit # 2 MVA
3.9
12.8
12.8
CTA/Metra Connection # 1 MVA
2.5
CTA/Metra Connection # 2 MVA
-3.8
CTA/Metra MVA
1.3

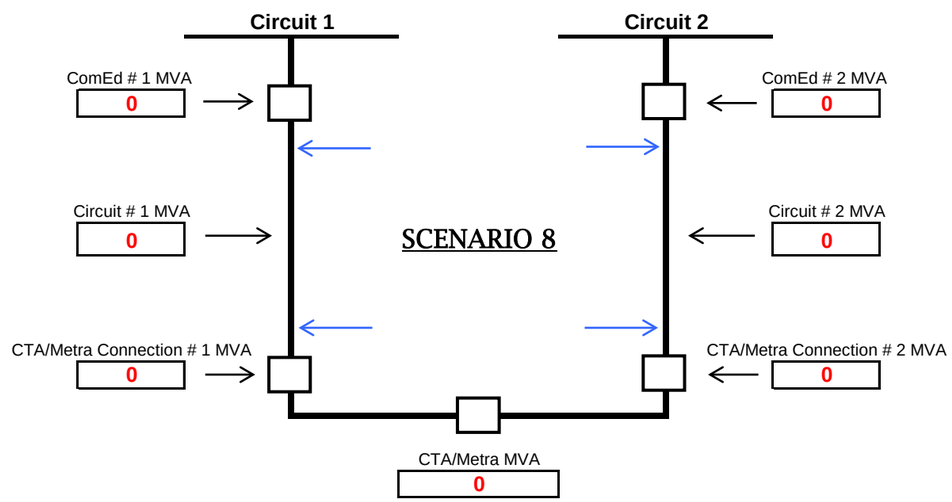
Circuit 1
Circuit 2
ComEd # 1 MVA
0
ComEd # 2 MVA
0
Circuit # 1 MVA
0
SCENARIO 8
Circuit # 2 MVA
0
CTA/Metra Connection # 1 MVA
0
CTA/Metra Connection # 2 MVA
0
CTA/Metra MVA
0

II CYME Study Information

- [redacted] assumed load demand [redacted] kW at PF [redacted] (From load information provided by Cedar).
- [redacted] assumed load demand [redacted] kVA at PF [redacted] (From load information provided by Cedar and CIMS).
- [redacted] assumed load demand [redacted] kVA at PF [redacted] (From load information provided by Cedar and CIMS).
- [redacted] assumed load demand [redacted] kVA at PF [redacted] (From load information provided by Cedar and CIMS).
- [redacted] assumed load demand [redacted] kVA at PF [redacted] (From load information provided by Cedar, and CIMS).
- [redacted] assumed load demand [redacted] kVA at PF [redacted] (From load information provided by Cedar and CIMS).

- [redacted] APT load information used.
  - [redacted] APT selected load date: [redacted]
  - [redacted] APT actual load on [redacted]
  - [redacted] APT WA on selected load date: [redacted]
  - [redacted] WA load: [redacted]

- [redacted] APT load information used.
  - [redacted] APT selected load date: [redacted]
  - [redacted] APT actual load on [redacted]
  - [redacted] APT WA on selected load date: [redacted]
  - [redacted] WA load: [redacted]

- [redacted] load allocation method
  - Validate in the CYME model all transformers, ESS loads, including [redacted] kVA for each feeding line at [redacted] per Cedar meter information.
  - Open section bus tie breaker at [redacted] (i.e., assumed zero point of the network). This allowed for proper load allocation on the feeders.
  - Power factor of [redacted] for [redacted] and [redacted] were used during allocation so as to obtain an adjusted load PF of [redacted] on all feeders.
  - Ignore motors.
  - Open zero-point section and allocate the loads.
  - Close zero-point and run analysis.

- Physical midpoint kV on feeder [redacted] is taken at section 489234635 and the endpoint kV is taken at section 489031233-2.

- Physical midpoint kV on feeder [redacted] is taken at section 149602523 and the endpoint kV is taken at section 150244050.

II - CYME Study Results

Scenario	@ CTA -Connection #1 (MVA)	@ CTA - Connection #2 (MVA)	@ ComEd - Circuit #1 (MVA)	@ ComEd - Circuit #2 (MVA)	@ CTA -Connection #1 (kV)	@ CTA - Connection #2 (kV)	@ ComEd - Circuit #1 (kV)	@ ComEd - Circuit #2 (kV)	@ ComEd - Circuit #1 Midpoint (kV)	@ ComEd - Circuit #2 Midpoint (kV)	@ ComEd - Circuit #1 Endpoint (kV)	@ ComEd - Circuit #2 Endpoint (kV)
1	-0.8	-0.5	3.3	4.3	12.9	12.9	13.0	13.0	12.9	12.9	12.9	12.8
2	0.0	-1.3	0.0	5.1	0.0	12.9	0.0	13.0	0.0	12.9	0.0	12.8
3	0.0	-1.3	2.5	5.1	13.0	12.9	13.0	13.0	13.0	12.9	13.0	12.8
4	-1.3	0.0	3.8	0.0	12.9	0.0	13.0	0.0	12.9	0.0	12.9	0.0
5	-1.3	0.0	3.8	3.8	12.9	13.0	13.0	13.0	12.9	12.9	12.9	12.9
6	2.5	-3.8	0.0	7.7	12.8	12.8	12.8	13.0	12.8	12.9	12.8	12.8
7	-5.0	3.7	7.6	0.0	12.8	12.8	13.0	12.7	12.8	12.7	12.8	12.6

Scenario:

Scenario 1: @ CTA/Metra connection #1 and #2 closed, @ ComEd circuit #1 and #2 closed. This represents the normal condition.

Scenario 2: @ CTA/Metra connection #1 open and #2 closed, @ ComEd circuit #1 open and #2 closed. This represents an outage of ComEd circuit #1.

Scenario 3: @ CTA/Metra connection #1 and bus tie open and #2 closed, @ ComEd circuit #1 and #2 closed. This represents an outage of CTA/Metra Bus #1.

Scenario 4: @ CTA/Metra connection #1 closed and #2 open, @ ComEd circuit #1 closed and #2 open. This represents an outage of ComEd circuit #2.

Scenario 5: @ CTA/Metra connection #1 closed and #2 and bus tie open, @ ComEd circuit #1 and #2 closed. This represents an outage of CTA/Metra Bus #2.

Scenario 6: @ CTA/Metra connection #1 and #2 closed, @ ComEd circuit #1 open and #2 closed. This represents loss of source for ComEd circuit #1.

Scenario 7: @ CTA/Metra connection #1 and #2 closed, @ ComEd circuit #1 closed and #2 open. This represents loss of source for ComEd circuit #2.

CONFIDENTIAL AND PROPRIETARY - CEII

II SUBSTATION

III-AAA CYME Study Results

Scenario	@ CTA Connection #1 (MVA)	@ CTA Connection #2 (MVA)	@ CTA Connection #3 (MVA)	@ CTA Connection #4 (MVA)	@ ComEd - Circuit #1 (MVA)	@ ComEd - Circuit #2 (MVA)	@ ComEd - Circuit #3 (MVA)	@ CTA - Connection #1 (kV)	@ CTA - Connection #2 (kV)	@ CTA - Connection #3 (kV)	@ CTA - Connection #4 (kV)	@ ComEd - Circuit #1 (kV)	@ ComEd - Circuit #2 (kV)	@ ComEd - Circuit #3 (kV)
1	-1.1	0.2	5.7	-6.0	4.8	6.5	6.0	12.8	12.8	13.0	13.0	13.0	13.0	13.0
2	0.0	-1.1	6.2	-6.5	0.0	7.1	6.5	0.0	12.8	13.0	13.0	0.0	13.0	13.0
3	0.0	-1.1	6.2	-6.5	3.7	7.1	6.5	12.9	12.8	13.0	13.0	13.0	13.0	13.0
4	-1.1	0.0	4.0	-4.2	4.8	0.0	4.3	12.8	0.0	13.0	13.0	13.0	0.0	13.0
5	-1.1	0.0	5.7	-6.0	4.8	6.5	6.0	12.8	12.8	13.0	13.0	13.0	13.0	13.0
6	-2.7	1.6	-0.3	0.0	6.4	11.0	0.0	12.7	12.7	12.6	0.0	13.0	13.0	0.0
7	-2.6	1.5	0.0	-0.3	6.4	10.8	0.3	12.7	12.7	13.0	13.0	13.0	13.0	13.0
8	-2.7	1.6	-0.3	0.0	6.4	11.0	0.0	12.7	12.7	12.6	13.0	13.0	13.0	13.0
9	3.7	-4.8	8.0	-8.3	0.0	9.1	8.3	12.6	12.6	12.9	13.0	12.5	13.0	13.0
10	-2.9	1.8	10.4	-10.7	6.7	0.0	10.8	12.7	12.7	12.9	12.9	13.0	12.6	13.0
11	-2.7	1.6	-0.3	0.0	6.4	11.0	0.0	12.7	12.7	12.6	12.6	13.0	13.0	12.6
12	-2.4	1.3	0.0	-0.3	6.1	10.2	0.3	12.7	12.7	13.0	13.0	13.0	13.0	13.0

III-AAA CYME Study Results

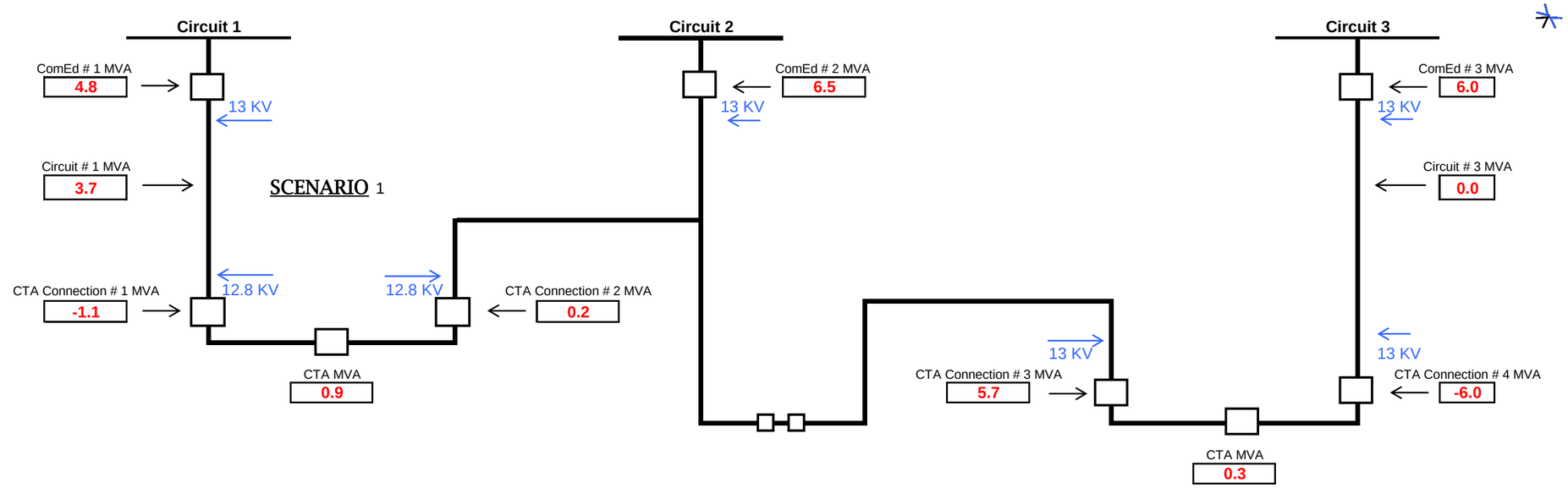

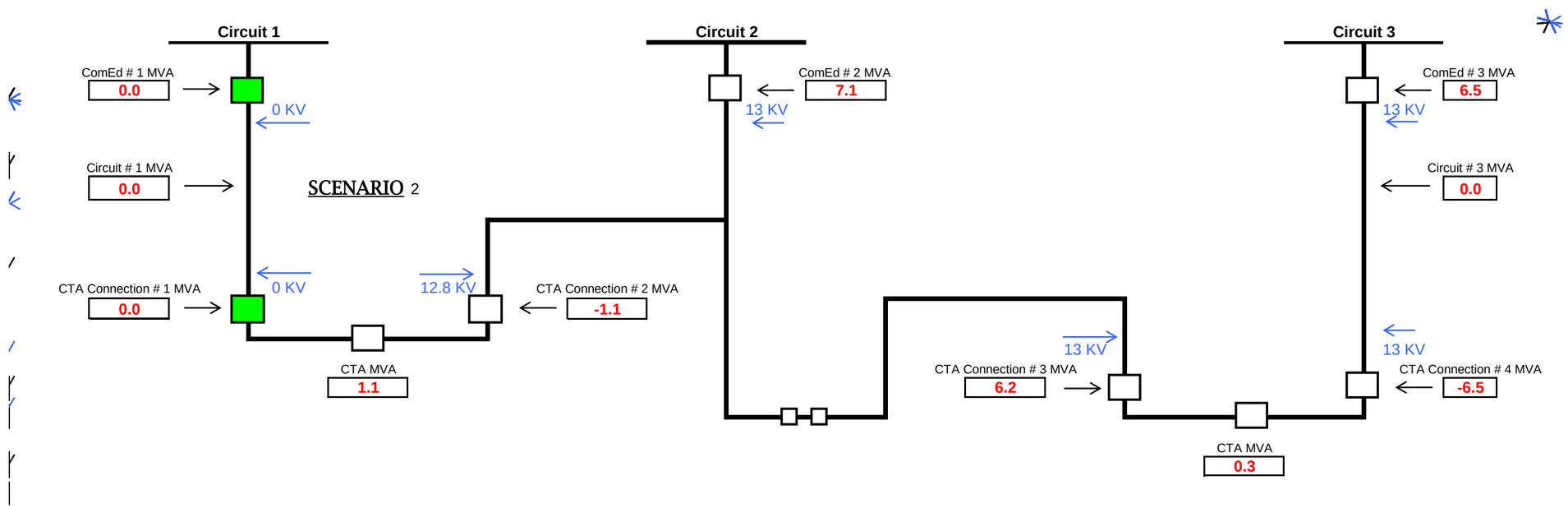

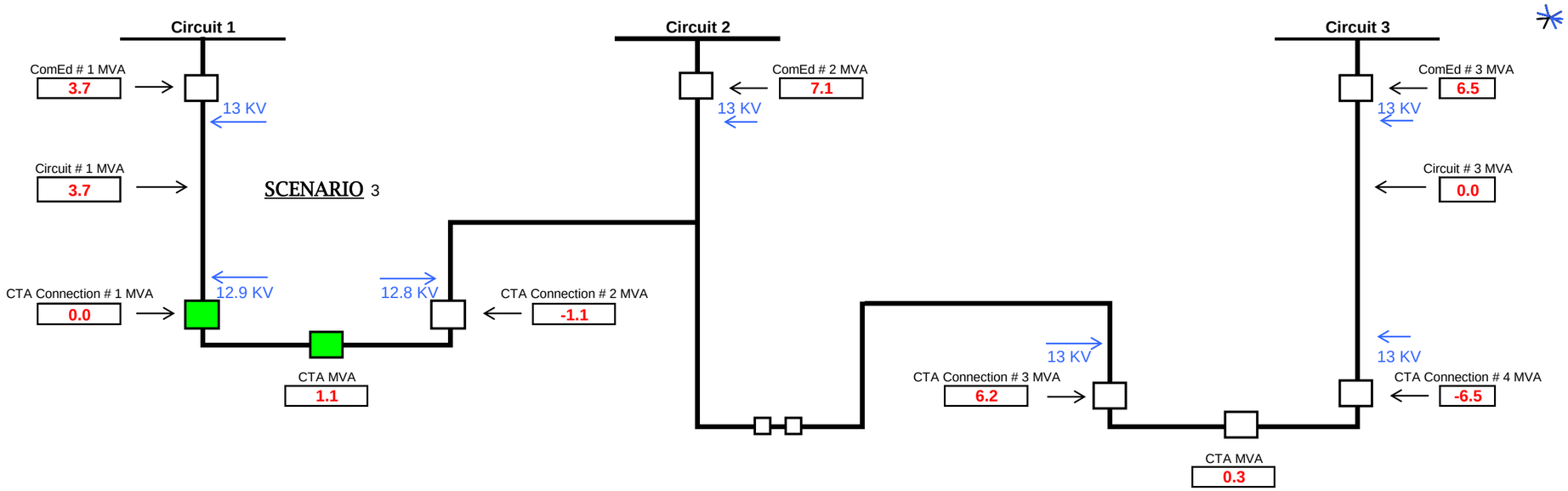
Circuit 1
Circuit 2
Circuit 3
ComEd # 1 MVA
3.7
13 KV
Circuit # 1 MVA
3.7
SCENARIO 3
CTA Connection # 1 MVA
0.0
12.9 KV
12.8 KV
CTA Connection # 2 MVA
-1.1
CTA MVA
1.1
ComEd # 2 MVA
7.1
13 KV
13 KV
CTA Connection # 3 MVA
6.2
CTA MVA
0.3
ComEd # 3 MVA
6.5
13 KV
Circuit # 3 MVA
0.0
13 KV
CTA Connection # 4 MVA
-6.5

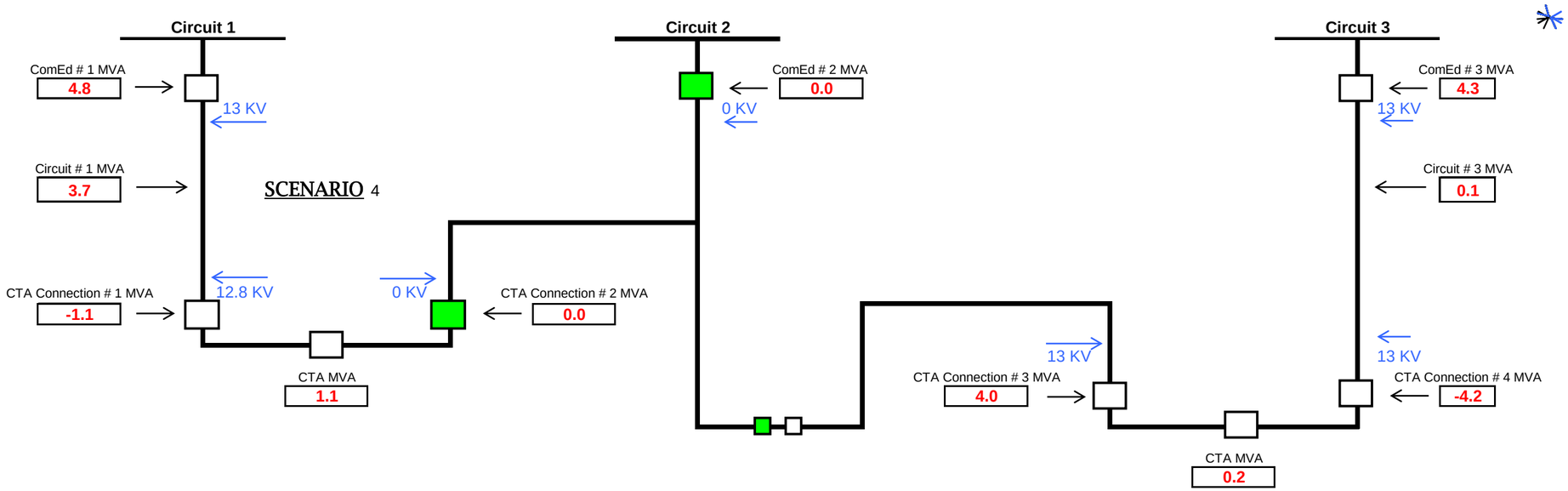
Circuit 1
Circuit 2
Circuit 3
ComEd # 1 MVA
4.8
13 KV
Circuit # 1 MVA
3.7
SCENARIO 4
CTA Connection # 1 MVA
-1.1
12.8 KV
0 KV
CTA Connection # 2 MVA
0.0
CTA MVA
1.1
ComEd # 2 MVA
0.0
0 KV
13 KV
CTA Connection # 3 MVA
4.0
CTA MVA
0.2
ComEd # 3 MVA
4.3
13 KV
Circuit # 3 MVA
0.1
13 KV
CTA Connection # 4 MVA
-4.2

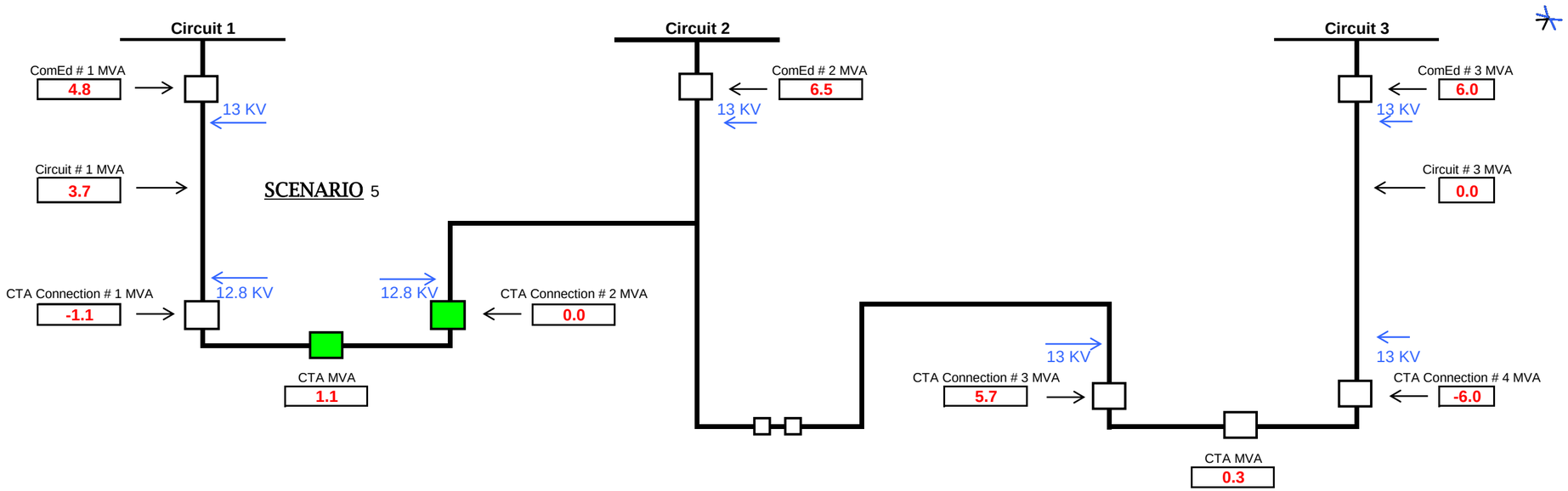
Circuit 1
Circuit 2
Circuit 3
ComEd # 1 MVA
4.8
13 KV
Circuit # 1 MVA
3.7
SCENARIO 5
CTA Connection # 1 MVA
-1.1
12.8 KV
12.8 KV
CTA Connection # 2 MVA
0.0
CTA MVA
1.1
ComEd # 2 MVA
6.5
13 KV
13 KV
CTA Connection # 3 MVA
5.7
CTA MVA
0.3
ComEd # 3 MVA
6.0
13 KV
Circuit # 3 MVA
0.0
13 KV
CTA Connection # 4 MVA
-6.0

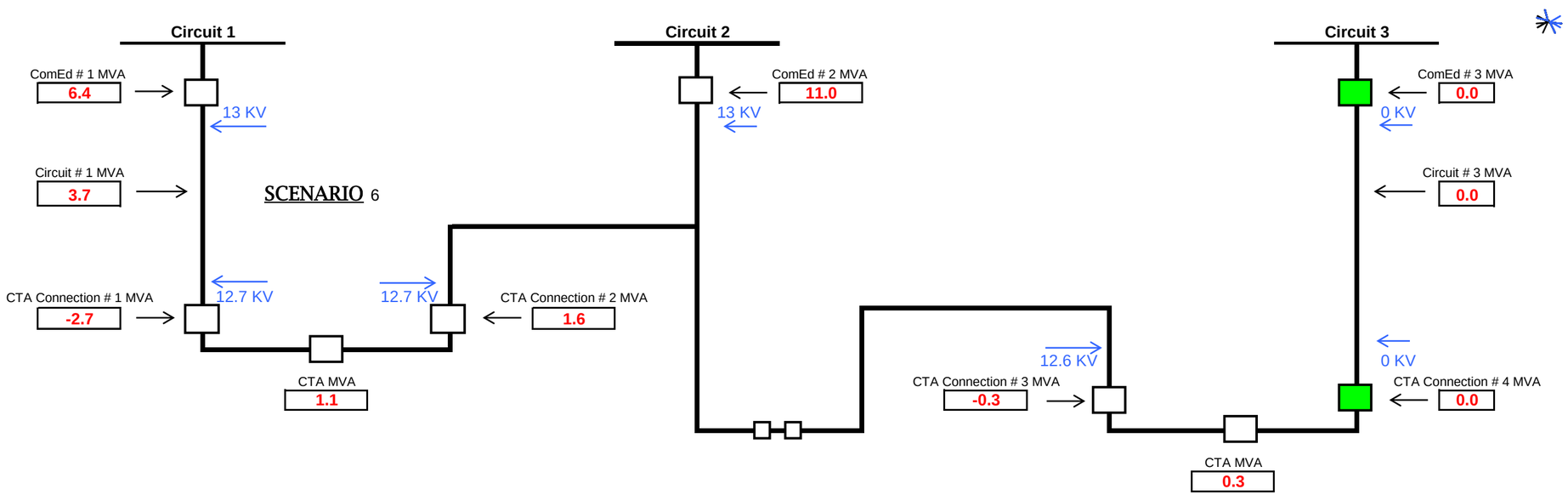
Circuit 1
Circuit 2
Circuit 3
ComEd # 1 MVA
6.4
13 KV
Circuit # 1 MVA
3.7
SCENARIO 6
CTA Connection # 1 MVA
-2.7
12.7 KV
12.7 KV
CTA Connection # 2 MVA
1.6
CTA MVA
1.1
ComEd # 2 MVA
11.0
13 KV
12.6 KV
CTA Connection # 3 MVA
-0.3
CTA MVA
0.3
ComEd # 3 MVA
0.0
0 KV
Circuit # 3 MVA
0.0
0 KV
CTA Connection # 4 MVA
0.0

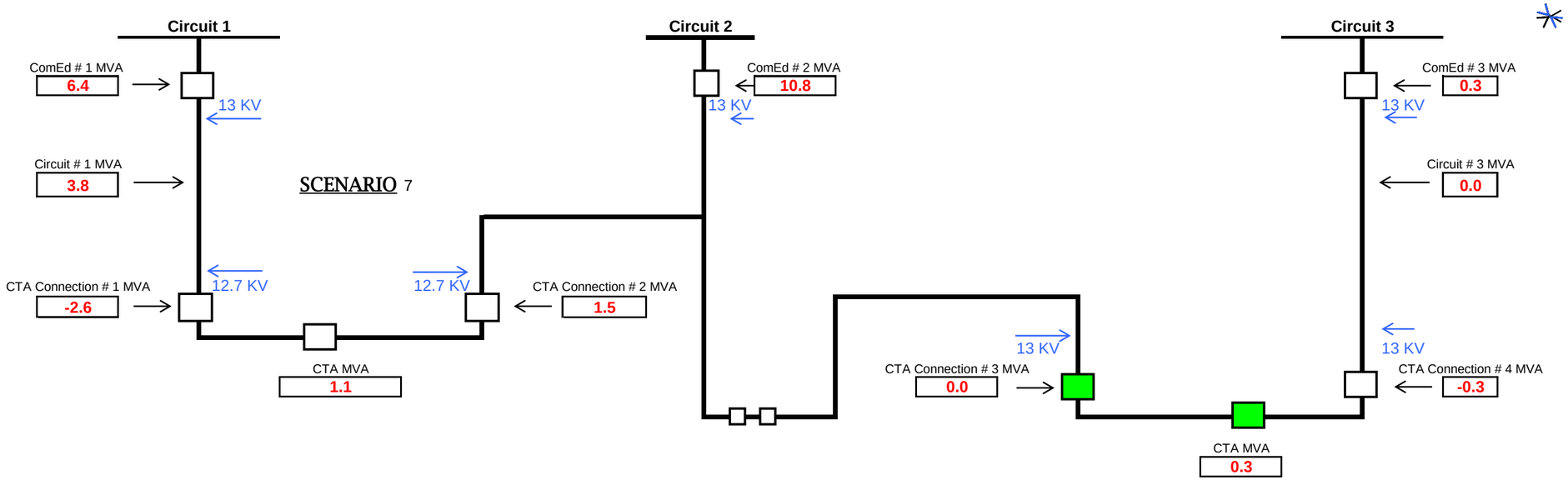
Circuit 1
Circuit 2
Circuit 3
ComEd # 1 MVA
6.4
13 KV
Circuit # 1 MVA
3.8
SCENARIO 7
CTA Connection # 1 MVA
-2.6
12.7 KV
12.7 KV
CTA Connection # 2 MVA
1.5
CTA MVA
1.1
ComEd # 2 MVA
10.8
13 KV
13 KV
CTA Connection # 3 MVA
0.0
CTA MVA
0.3
ComEd # 3 MVA
0.3
13 KV
Circuit # 3 MVA
0.0
13 KV
CTA Connection # 4 MVA
-0.3

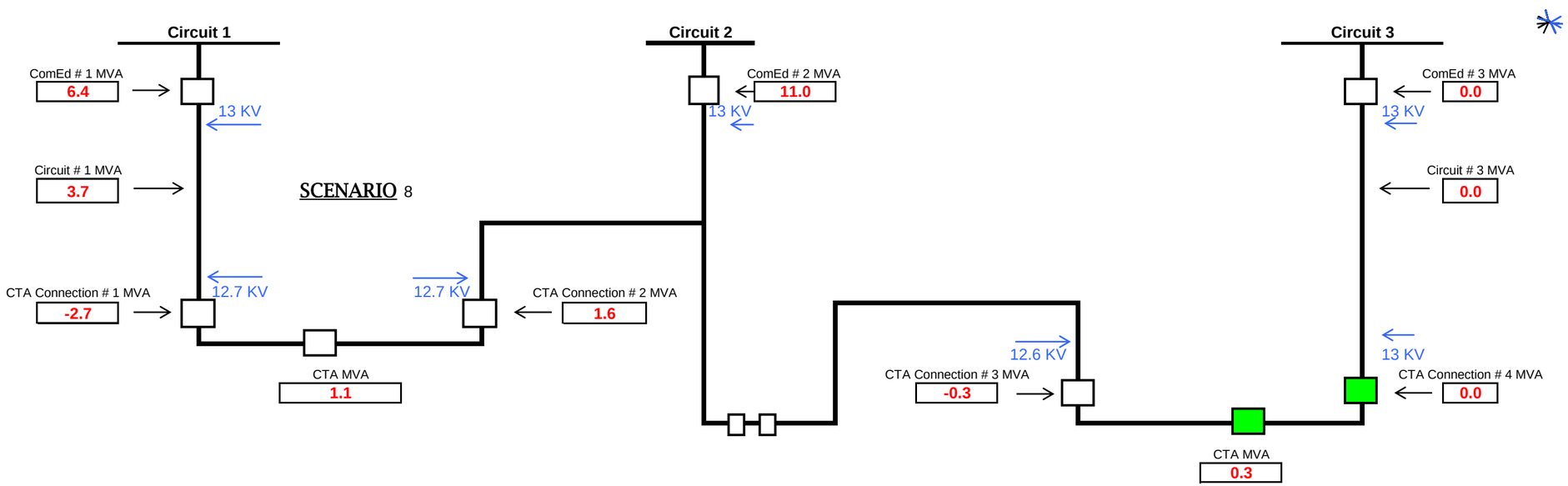
Circuit 1
Circuit 2
Circuit 3
ComEd # 1 MVA
6.4
13 KV
Circuit # 1 MVA
3.7
SCENARIO 8
CTA Connection # 1 MVA
-2.7
12.7 KV
12.7 KV
CTA Connection # 2 MVA
1.6
CTA MVA
1.1
ComEd # 2 MVA
11.0
13 KV
12.6 KV
CTA Connection # 3 MVA
-0.3
CTA MVA
0.3
ComEd # 3 MVA
0.0
13 KV
Circuit # 3 MVA
0.0
13 KV
CTA Connection # 4 MVA
0.0

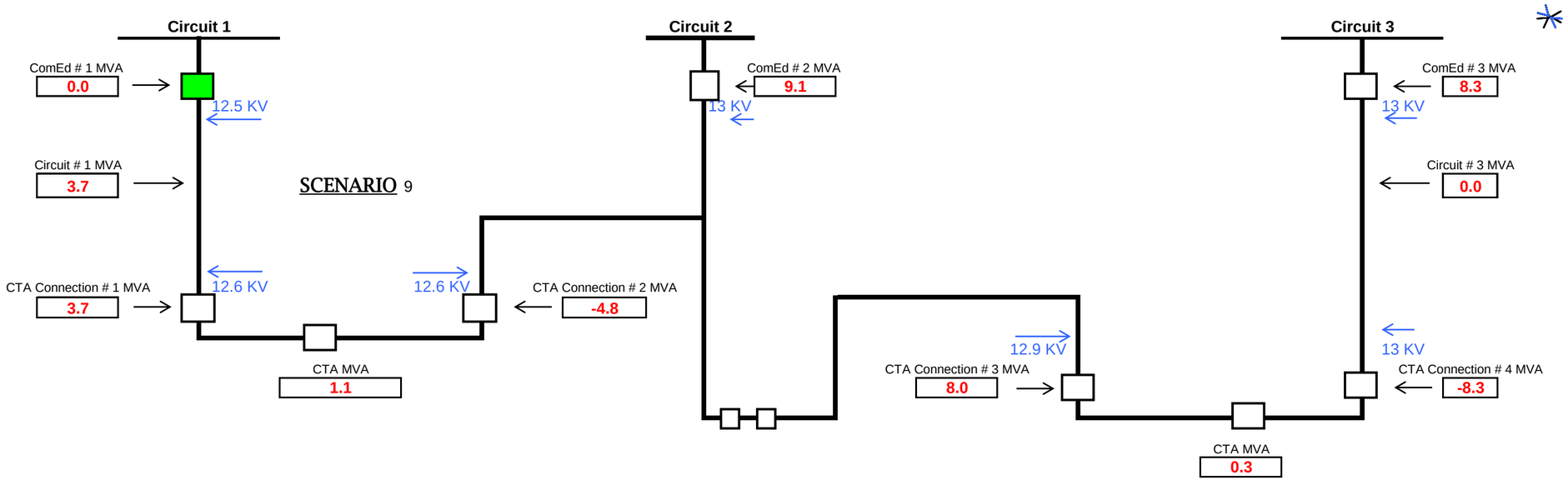
Circuit 1
Circuit 2
Circuit 3
ComEd # 1 MVA
0.0
12.5 KV
Circuit # 1 MVA
3.7
SCENARIO 9
CTA Connection # 1 MVA
3.7
12.6 KV
12.6 KV
CTA Connection # 2 MVA
-4.8
CTA MVA
1.1
ComEd # 2 MVA
9.1
13 KV
12.9 KV
CTA Connection # 3 MVA
8.0
CTA MVA
0.3
ComEd # 3 MVA
8.3
13 KV
Circuit # 3 MVA
0.0
13 KV
CTA Connection # 4 MVA
-8.3

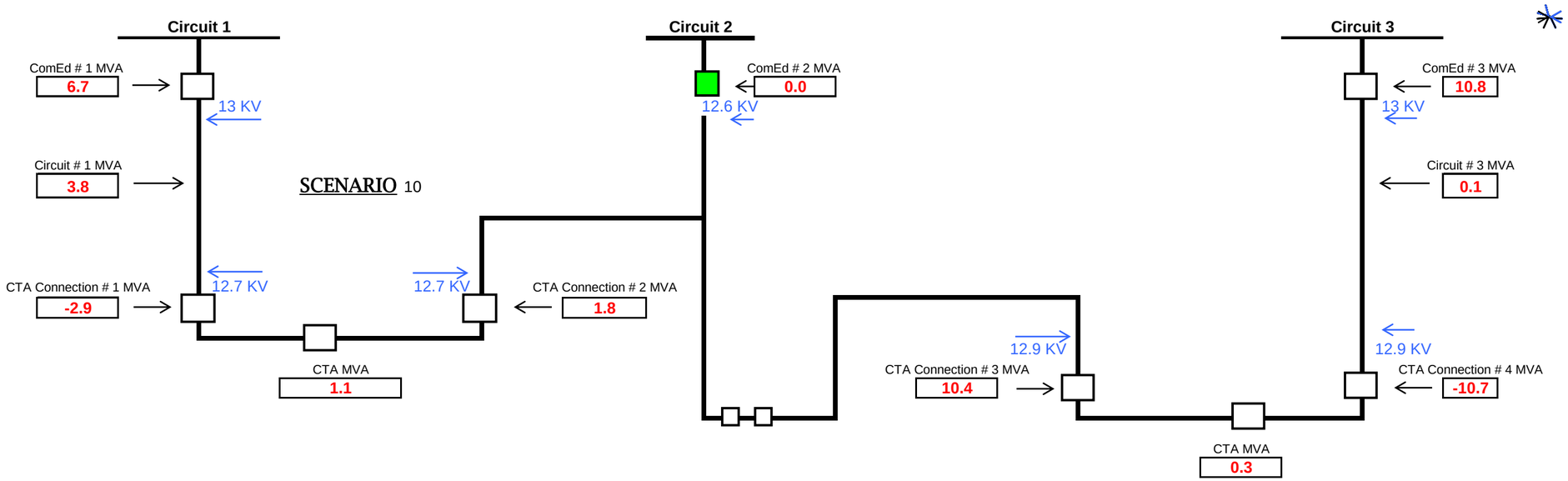
Circuit 1
Circuit 2
Circuit 3
ComEd # 1 MVA
6.7
13 KV
Circuit # 1 MVA
3.8
SCENARIO 10
CTA Connection # 1 MVA
-2.9
12.7 KV
12.7 KV
CTA Connection # 2 MVA
1.8
CTA MVA
1.1
ComEd # 2 MVA
0.0
12.6 KV
12.9 KV
CTA Connection # 3 MVA
10.4
CTA MVA
0.3
ComEd # 3 MVA
10.8
13 KV
Circuit # 3 MVA
0.1
12.9 KV
CTA Connection # 4 MVA
-10.7

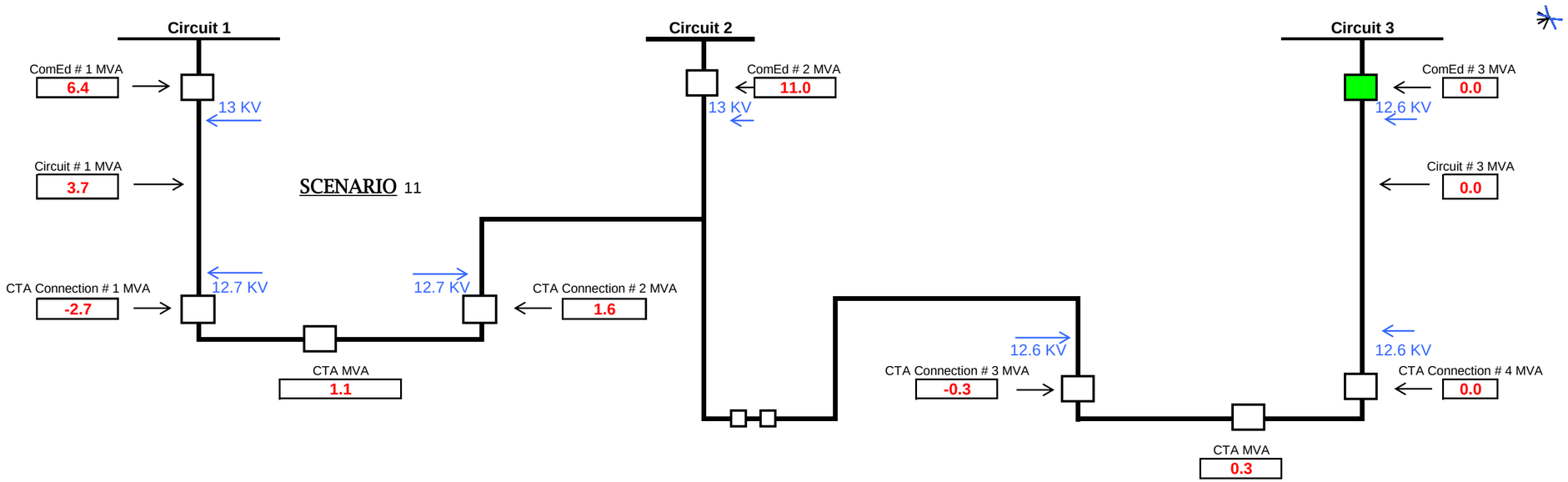
Circuit 1
Circuit 2
Circuit 3
ComEd # 1 MVA
6.4
13 KV
Circuit # 1 MVA
3.7
SCENARIO 11
CTA Connection # 1 MVA
-2.7
12.7 KV
12.7 KV
CTA Connection # 2 MVA
1.6
CTA MVA
1.1
ComEd # 2 MVA
11.0
13 KV
12.6 KV
CTA Connection # 3 MVA
-0.3
CTA MVA
0.3
ComEd # 3 MVA
0.0
12.6 KV
Circuit # 3 MVA
0.0
12.6 KV
CTA Connection # 4 MVA
0.0

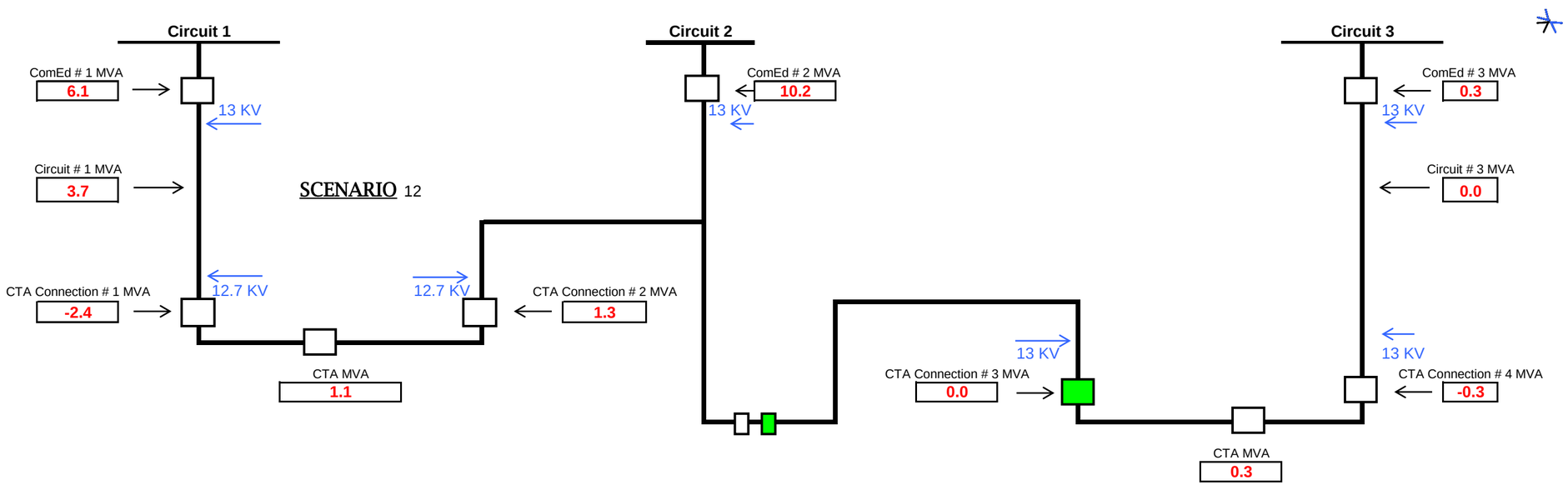
Circuit 1
Circuit 2
Circuit 3
ComEd # 1 MVA
6.1
13 KV
Circuit # 1 MVA
3.7
SCENARIO 12
CTA Connection # 1 MVA
-2.4
12.7 KV
12.7 KV
CTA Connection # 2 MVA
1.3
CTA MVA
1.1
ComEd # 2 MVA
10.2
13 KV
13 KV
CTA Connection # 3 MVA
0.0
CTA MVA
0.3
ComEd # 3 MVA
0.3
13 KV
Circuit # 3 MVA
0.0
13 KV
CTA Connection # 4 MVA
-0.3

III-AAA CYME Study Information

[redacted]

- [redacted] load obtained from TED [redacted] kVA with [redacted] pf
- [redacted] load obtained from TED [redacted] kVA with [redacted] pf
- [redacted] load obtained from TED [redacted] kVA with [redacted] pf
- [redacted] load obtained from TED [redacted] kVA with [redacted] pf
- [redacted] substation load was obtained from CEDAR load information. Peak load for each feeding line is [redacted] with assumed PF=[redacted]
- [redacted] load obtained from TED [redacted] kVA with [redacted] pf
- [redacted] load obtained from TED [redacted] kVA with [redacted] pf
- [redacted] load obtained from TED [redacted] kVA with [redacted] pf
- [redacted] load obtained from TED [redacted] kVA with [redacted] pf
- [redacted] load obtained from TED [redacted] kVA with [redacted] pf
- [redacted] load obtained from TED [redacted] kVA with [redacted] pf
- [redacted] load obtained from TED [redacted] kVA with [redacted] pf
- [redacted] load obtained from TED [redacted] kVA with [redacted] pf
- [redacted] load obtained from TED [redacted] kVA with [redacted] pf

[redacted]

- [redacted] load was obtained from CIMS for [redacted] customer [redacted] kW with [redacted] pf
- [redacted] substation load was obtained from CEDAR load information. Peak load for each feeding line is [redacted] kW with assumed PF=[redacted].
- [redacted] -load obtained from TED – [redacted] kVA with [redacted] pf
- [redacted] -load obtained from TED – [redacted] kVA with [redacted] pf
- [redacted] load was obtained from CIMS for [redacted] via customer [redacted] kW with [redacted] pf. Added spot load at [redacted] for [redacted] kW with [redacted] pf. This was abnormally carried by [redacted] on peak day.

[redacted]

- [redacted] substation load was obtained from CEDAR load information. Peak load for each feeding line is [redacted] with assumed [redacted]

- [redacted] APT load information used.
  - [redacted] APT selected load date: [redacted]
  - [redacted] APT actual load on [redacted]
  - [redacted] APT WA on selected load date: [redacted]
  - [redacted] WA load: [redacted]

- [redacted] APT load information used.
  - [redacted] APT selected load date: [redacted]
  - [redacted] APT actual load on [redacted]
  - [redacted] APT WA on selected load date: [redacted]
  - [redacted] WA load: [redacted]

- [redacted] APT load information used.
  - [redacted] APT selected load date: [redacted]
  - [redacted] APT actual load on [redacted]
  - [redacted] APT WA on selected load date: [redacted]
  - [redacted] WA load: [redacted]
- [redacted] APT load information used.
  - [redacted] APT selected load date: [redacted]
  - [redacted] APT actual load on [redacted]
  - [redacted] APT WA on selected load date: [redacted]
  - [redacted] WA load: [redacted]

- [redacted] load allocation method
  - Validate in the CYME model all transformers, ESS loads, including [redacted] for each feeding line at [redacted] per CEDAR & [redacted]kW for each feeding line at [redacted] per CEDAR.
  - Inside the [redacted] the BT breaker was identified as the zero point supporting [redacted] to loads on the [redacted] feeder network.
  - Enter feeder loads: [redacted]
  - Ignore motors
  - Open bus tie breaker [redacted] and allocate the loads.
  - Adjust pf. at source [redacted] and allocate to obtain an adjusted load PF of [redacted] on feeders [redacted]
  - Close bus tie breaker [redacted] and run analysis.

- [redacted] midpoint KV taken at cable section 489170381 and endpoint KV taken at cable section 1018970979 outside of [redacted].

- [redacted] midpoint KV taken at cable section 489376404 and endpoint KV taken at cable section 489359567 outside of [redacted]

- [redacted] midpoint KV taken at cable section 808679009 and endpoint KV taken at cable section 149191380.

PUBLIC

III-AAA CYME Study Results

Scenario	@ CTA -Connection #1 (MVA)	@ CTA - Connection #2 (MVA)	@ CTA -Connection #3 (MVA	@ CTA - Connection #4 (MVA)	@ ComEd - Circuit #1 (MVA)	@ ComEd - Circuit #2 (MVA)	@ ComEd - Circuit #3 (MVA)	@ CTA -Connection #1 (kV)	@ CTA - Connection #2 (kV)	@ CTA -Connection #3 (kV)	@ CTA- Connection #4 (kV)	@ ComEd - Circuit #1 (kV)	@ ComEd - Circuit #2 (kV)	@ ComEd - Circuit #3 (kV)	@ ComEd - Circuit #1 Midpoint (kV)	@ ComEd - Circuit #2 Midpoint (kV)	@ ComEd - Circuit #3 Midpoint (kV)	@ ComEd - Circuit #1 Endpoint (kV)	@ ComEd - Circuit #2 Endpoint (kV)	@ ComEd - Circuit #3 Endpoin (kV)
1	-1.1	0.2	5.7	-6.0	4.8	6.5	6.0	12.8	12.8	13.0	13.0	13.0	13.0	13.0	12.9	12.8	13.0	12.8	12.8	13.0
2	0	-1.1	6.2	-6.5	0	7.1	6.5	0	12.8	13.0	13.0	0	13.0	13.0	0	12.8	13.0	0	12.8	13.0
3	0	-1.1	6.2	-6.5	3.7	7.1	6.5	12.9	12.8	13.0	13.0	13.0	13.0	13.0	12.9	12.8	13.0	12.9	12.8	13.0
4	-1.1	0	4.0	-4.2	4.8	0	4.3	12.8	0	13.0	13.0	13.0	0	13.0	12.9	0	13.0	12.8	0	13.0
5	-1.1	0	5.7	-6.0	4.8	6.5	6.0	12.8	12.8	13.0	13.0	13.0	13.0	13.0	12.9	12.8	13.0	12.8	12.8	13.0
6	-2.7	1.6	-0.3	0	6.4	11.0	0	12.7	12.7	12.6	0	13.0	13.0	0	12.8	12.7	0	12.7	12.7	0
7	-2.6	1.5	0	-0.3	6.4	10.8	0.3	12.7	12.7	13.0	13.0	13.0	13.0	13.0	12.8	12.7	13.0	12.7	12.7	13.0
8	-2.7	1.6	-0.3	0	6.4	11.0	0	12.7	12.7	12.6	13.0	13.0	13.0	13.0	12.8	12.7	13.0	12.7	12.7	13.0
9	3.7	-4.8	8.0	-8.3	0	9.1	8.3	12.6	12.6	12.9	13.0	12.5	13.0	13.0	12.5	12.7	13.0	12.6	12.6	13.0
10	-2.9	1.8	10.4	-10.7	6.7	0	10.8	12.7	12.7	12.9	12.9	13.0	12.6	13.0	12.8	12.6	13.0	12.7	12.7	12.9
11	-2.7	1.6	-0.3	0	6.4	11.0	0	12.7	12.7	12.6	12.6	13.0	13.0	12.6	12.8	12.7	12.6	12.7	12.7	12.6
12	-2.4	1.3	0	-0.3	6.1	10.2	0.3	12.7	12.7	13.0	13.0	13.0	13.0	13.0	12.8	12.7	13.0	12.7	12.7	13.0

Scenario:

Scenario 1: @ CTA/Metra connection #1, #2, #3 and #4 closed, @ ComEd circuit #1, #2 and #3 closed. This represents the normal condition.

Scenario 2: @ CTA/Metra connection #1 open and #2, #3, #4 closed, @ ComEd circuit #1 open; #2 and #3 closed. This represents an outage of ComEd circuit #1.

Scenario 3: @ CTA/Metra connection #1 and bus tie open and #2, #3, #4 closed, @ ComEd circuit #1, #2 and #3 closed. This represents an outage of CTA/Metra Bus #1.

Scenario 4: @ CTA/Metra connection #1, #3, #4 closed and #2 open @ ComEd circuit #1 and #3 closed; #2 open, @ [redacted] open. This represents an outage of ComEd circuit #2.

Scenario 5: @ CTA/Metra connection #2 and bus tie open and #1, #3, #4 closed,, @ ComEd circuit #1, #2 and #3 closed. This represents an outage of CTA/Metra Bus #2.

Scenario 6: @ CTA/Metra connection #1, #2 and #3 closed and #4 open, @ ComEd circuit #1 and #2 closed; #3 open. This represents an outage of ComEd circuit #3.

Scenario 7: @ CTA/Metra connection #3 and bus tie open and #1, #2, #4 closed, @ ComEd circuit #1, #2 and #3 closed. This represents an outage of CTA/Metra Bus #3.

Scenario 8: @ CTA/Metra connection #4 and bus tie open and #1, #2, #3 closed @ ComEd circuit #1, #2 and #3 closed. This represents an outage of CTA/Metra Bus #4.

Scenario 9: @ CTA/Metra connection #1, #2, #3 and #4 closed, @ ComEd circuit #1 open; #2 and #3 closed. This represents loss of source for ComEd circuit #1.

Scenario 10: @ CTA/Metra connection #1, #2, #3 and #4 closed, @ ComEd circuit #1 and #3 closed; #2 open. This represents loss of source for ComEd circuit #2.

Scenario 11: @ CTA/Metra connection #1, #2, #3 and #4 closed, @ ComEd circuit #1 and #2 closed; #3 open. This represents loss of source for ComEd circuit #3.

Scenario 12: @ CTA/Metra connection #1, #2, #4 closed and #3 open, @ ComEd circuit #1, #2, and #3 closed. @ [redacted] breaker open. This represents a loss of cable between [redacted].

CONFIDENTIAL AND PROPRIETARY - CEII

III-AAA SUBSTATION

J CYME Study Results

Scenario	@ CTA / Metra Connection #1 (MVA)	@ CTA / Metra - Connection #2 (MVA)	@ ComEd - Circuit #1 (MVA)	@ ComEd - Circuit #2 (MVA)	@ CTA / Metra - Connection #1 (kV)	@ CTA / Metra - Connection #2 (kV)	@ ComEd - Circuit #1 (kV)	@ ComEd - Circuit #2 (kV)
1	-4.7	3.4	5.3	5.6	12.4	12.4	12.4	12.4
2	0.0	-1.4	0.0	10.5	0.0	12.2	0.0	12.3
3	0.0	-1.4	0.5	10.5	12.5	12.2	12.5	12.3
4	-1.4	0.0	1.8	0.0	12.5	0.0	12.5	0.0
5	-1.4	0.0	1.8	9.1	12.5	12.3	12.5	12.3
6	0.5	-1.8	0.0	11.0	12.2	12.2	12.2	12.3
7	-10.3	8.9	11.0	0.0	12.2	12.2	12.3	12.2
8	-4.5	3.1	5.6	5.8	12.4	12.4	12.4	12.4

J Cyme Results Comparison

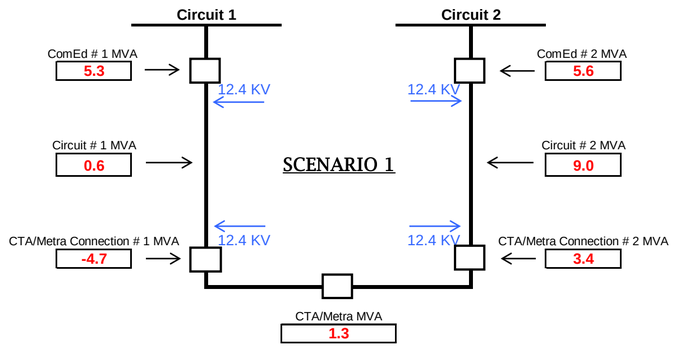

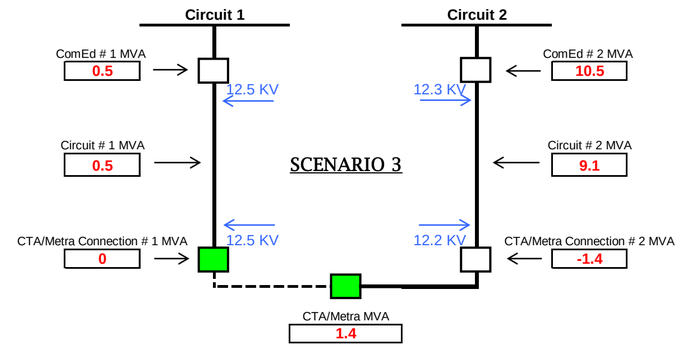

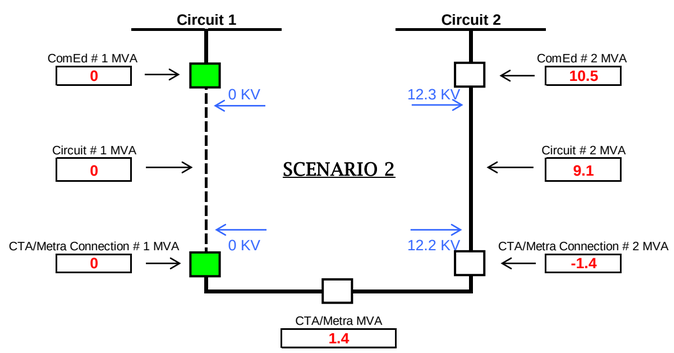

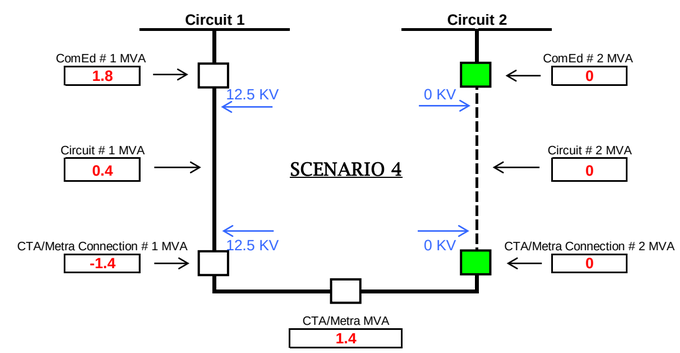

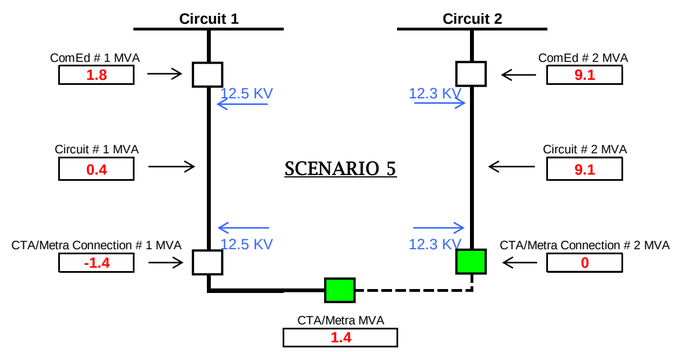
Circuit 1
Circuit 2
ComEd # 1 MVA
1.8
12.5 KV
12.3 KV
ComEd # 2 MVA
9.1
Circuit # 1 MVA
0.4
SCENARIO 5
Circuit # 2 MVA
9.1
CTA/Metra Connection # 1 MVA
-1.4
12.5 KV
12.3 KV
CTA/Metra Connection # 2 MVA
0
CTA/Metra MVA
1.4

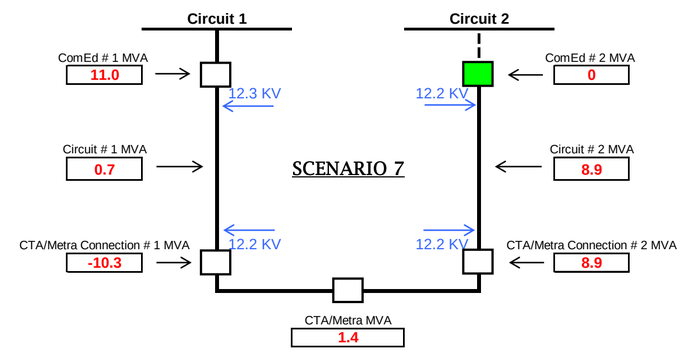
Circuit 1
Circuit 2
ComEd # 1 MVA
11.0
12.3 KV
12.2 KV
ComEd # 2 MVA
0
Circuit # 1 MVA
0.7
SCENARIO 7
Circuit # 2 MVA
8.9
CTA/Metra Connection # 1 MVA
-10.3
12.2 KV
12.2 KV
CTA/Metra Connection # 2 MVA
8.9
CTA/Metra MVA
1.4

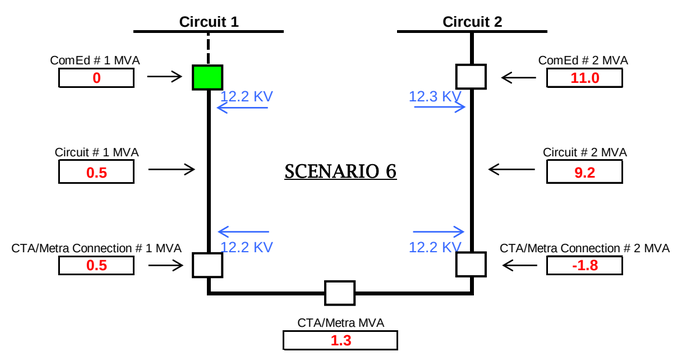
Circuit 1
Circuit 2
ComEd # 1 MVA
0
12.2 KV
12.3 KV
ComEd # 2 MVA
11.0
Circuit # 1 MVA
0.5
SCENARIO 6
Circuit # 2 MVA
9.2
CTA/Metra Connection # 1 MVA
0.5
12.2 KV
12.2 KV
CTA/Metra Connection # 2 MVA
-1.8
CTA/Metra MVA
1.3

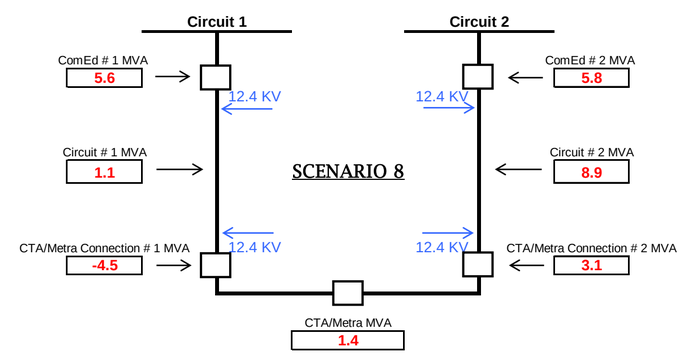
Circuit 1
Circuit 2
ComEd # 1 MVA
5.6
12.4 KV
12.4 KV
ComEd # 2 MVA
5.8
Circuit # 1 MVA
1.1
SCENARIO 8
Circuit # 2 MVA
8.9
CTA/Metra Connection # 1 MVA
-4.5
12.4 KV
12.4 KV
CTA/Metra Connection # 2 MVA
3.1
CTA/Metra MVA
1.4

J CYME Study Information

- Loads for all ESS / CTL were assumed according to proportional distribution of APT load information (proportional to nameplate ratings of all transformers). Loads assumed at PF=[redacted].

- [redacted] ([redacted]) substation load was obtained from Cedar Loads. Peak load for each feeding line is [redacted] KVA with assumed PF=[redacted].

- [redacted] APT load information used.
  - [redacted] APT selected load date: [redacted]
  - [redacted] APT actual load on [redacted] ➔ [redacted]
  - [redacted] APT WA on selected load date: [redacted]
  - [redacted] WA load: [redacted] ➔ [redacted]

- [redacted] APT load information used.
  - [redacted] APT selected load date: [redacted]
  - [redacted] APT actual load on [redacted] ➔ [redacted]
  - [redacted] APT WA on selected load date: [redacted]
  - [redacted] WA load: [redacted] ➔ [redacted]

- [redacted] APT load information used.
  - [redacted] APT selected load date: [redacted]
  - [redacted] APT actual load on [redacted] ➔ [redacted]
  - [redacted] APT WA on selected load date: [redacted]
  - [redacted] WA load: [redacted] ➔ [redacted]

- [redacted] load allocation method
  - Validate in the CYME model all transformers, ESS loads, including [redacted] KVA for each feeding line at [redacted] per Cedar meter information.
  - Breaker ([redacted]) at [redacted] on feeder [redacted] identified as zero point where [redacted] are supported by feeder [redacted] to loads on the [redacted] feeder network. This allowed for proper load allocation on the two feeders.
  - Enter feeder loads: [redacted] **for** [redacted] (Avg WA [redacted] minus the [redacted] contributed to [redacted]) and [redacted] **for** [redacted] (Avg WA [redacted] plus the [redacted] supported from [redacted]). [redacted] **for** [redacted].
  - Power factor of [redacted] for [redacted], [redacted] for [redacted] and [redacted] for [redacted] were used during allocation.
  - Ignore motors.
  - Open zero-point switch and allocate the loads.
  - Close zero-point switch and run analysis.

- Physical midpoint on feeder [redacted] is taken at cable section at [redacted]; and the endpoint is taken at cable outside [redacted].

- Physical midpoint on feeder [redacted] is taken at cable section outside [redacted]; and the endpoint is taken at cable outside [redacted].

PUBLIC

J CYME Study Results

Scenario	@ CTA -Connection #1 (MVA)	@ CTA - Connection #2 (MVA)	@ ComEd - Circuit #1 (MVA)	@ ComEd - Circuit #2 (MVA)	@ CTA -Connection #1 (kV)	@ CTA - Connection #2 (kV)	@ ComEd - Circuit #1 (kV)	@ ComEd - Circuit #2 (kV)	@ ComEd - Circuit #1 Midpoint (kV)	@ ComEd - Circuit #2 Midpoint (kV)	@ ComEd - Circuit #1 Endpoint (kV)	@ ComEd - Circuit #2 Endpoint (kV)
1	-4.7	+3.4	+5.3	+5.6	12.4	12.4	12.4	12.4	12.4	12.3	12.4	12.2
2	0.0	-1.4	0.0	+10.5	0.0	12.2	0.0	12.3	0.0	12.2	0.0	12.1
3	0.0	-1.4	+0.5	+10.5	12.5	12.2	12.5	12.3	12.5	12.2	12.5	12.1
4	-1.4	0.0	+1.8	0.0	12.5	0.0	12.5	0.0	12.5	0.0	12.5	0.0
5	-1.4	0.0	+1.8	+9.1	12.5	12.3	12.5	12.3	12.5	12.2	12.5	12.1
6	+0.5	-1.8	0.0	+11.0	12.2	12.2	12.2	12.3	12.2	12.2	12.2	12.0
7	-10.3	+8.9	+11.0	0.0	12.2	12.2	12.3	12.2	12.3	12.1	12.2	12.0
8	-4.5	+3.1	+5.6	+5.8	12.4	12.4	12.4	12.4	12.4	12.3	12.4	12.2

Scenario:

Scenario 1: @ CTA/Metra connection #1 and #2 closed, @ ComEd circuit #1 and #2 closed. This represents the normal condition.

Scenario 2: @ CTA/Metra connection #1 open and #2 closed, @ ComEd circuit #1 open and #2 closed. This represents an outage of ComEd circuit #1.

Scenario 3: @ CTA/Metra connection #1 and bus tie open and #2 closed, @ ComEd circuit #1 and #2 closed. This represents an outage of CTA/Metra Bus #1.

Scenario 4: @ CTA/Metra connection #1 closed and #2 open, @ ComEd circuit #1 closed and #2 open. This represents an outage of ComEd circuit #2.

Scenario 5: @ CTA/Metra connection #1 closed and #2 and bus tie open, @ ComEd circuit #1 and #2 closed. This represents an outage of CTA/Metra Bus #2.

Scenario 6: @ CTA/Metra connection #1 and #2 closed, @ ComEd circuit #1 open and #2 closed. This represents loss of source for ComEd circuit #1.

Scenario 7: @ CTA/Metra connection #1 and #2 closed, @ ComEd circuit #1 closed and #2 open. This represents loss of source for ComEd circuit #2.

Scenario 8: @ CTA/Metra connection #1 and #2 closed, @ ComEd circuit #1 and #2 closed. Open switches #[redacted] & #[redacted] and close switches #[redacted] & #[redacted]. This represents an outage on feeder [redacted] with load transferred to [redacted] at [redacted] and [redacted].

CONFIDENTIAL AND PROPRIETARY - CEII

J SUBSTATION

JJ CYME Study Results

Scenario	@ CTA / Metra - Connection #1 (MVA)	@ CTA / Metra - Connection #2 (MVA)	@ ComEd - Circuit #1 (MVA)	@ ComEd - Circuit #2 (MVA)	@ CTA / Metra - Connection #1 (kV)	@ CTA / Metra - Connection #2 (kV)	@ ComEd - Circuit #1 (kV)	@ ComEd - Circuit #2 (kV)
1	-0.7	-2.3	5.0	4.6	13.0	13.0	13.0	13.0
2	0.0	-3.0	0.0	5.3	0.0	13.0	13.0	13.0
3	0.0	-3.0	4.3	5.3	13.0	13.0	13.0	13.0
4	-3.0	0.0	7.2	0.0	12.9	0.0	13.0	13.0
5	-3.0	0.0	7.2	2.5	12.9	13.0	13.0	13.0
6	4.4	-7.2	0.0	9.7	12.9	12.9	13.0	13.0
7	-5.3	2.5	9.7	0.0	12.9	12.9	13.0	13.0
8								

JJ Cyme Results Comparison

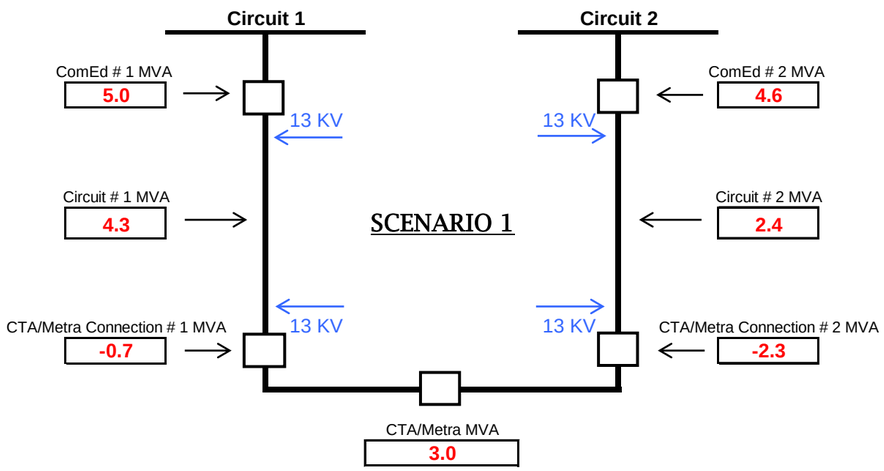

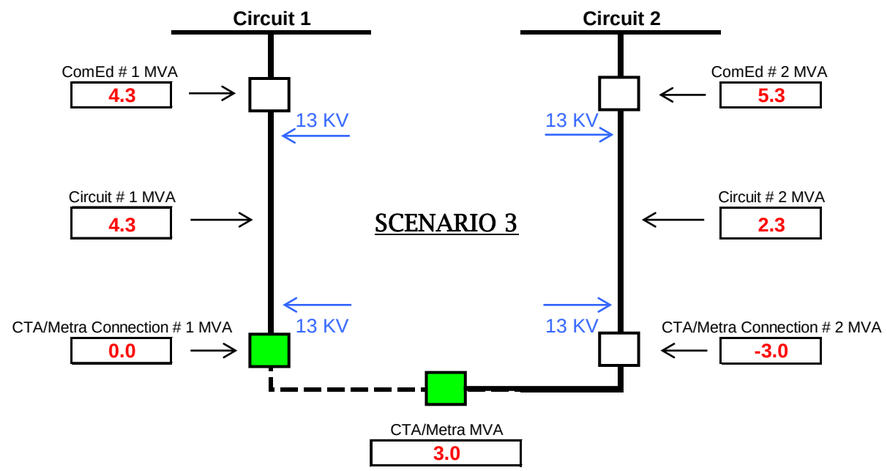

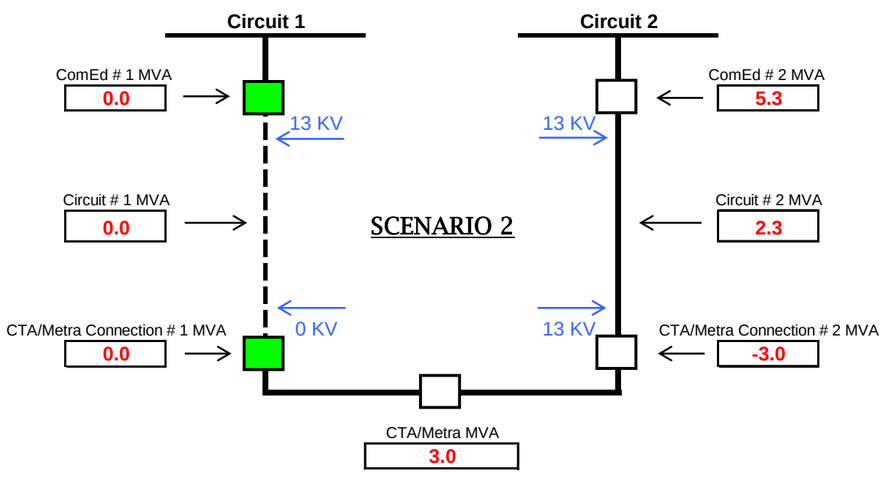

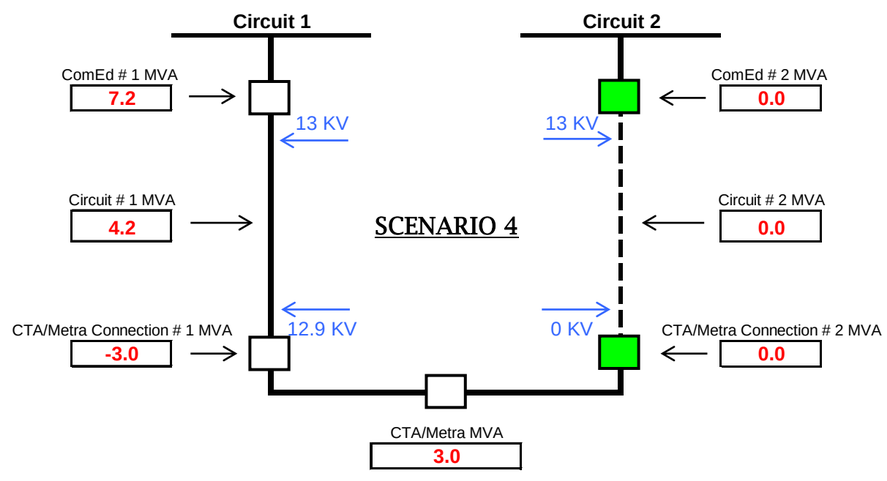

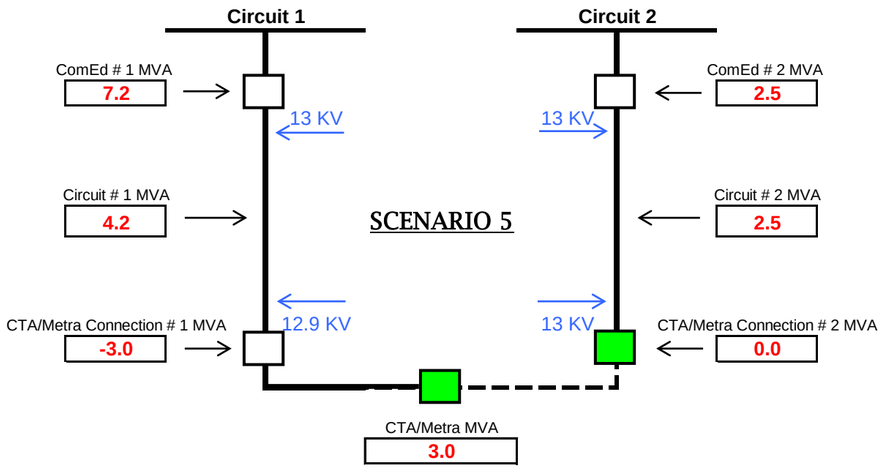
Circuit 1
Circuit 2
ComEd # 1 MVA
7.2
13 KV
13 KV
ComEd # 2 MVA
2.5
Circuit # 1 MVA
4.2
SCENARIO 5
Circuit # 2 MVA
2.5
CTA/Metra Connection # 1 MVA
-3.0
12.9 KV
13 KV
CTA/Metra Connection # 2 MVA
0.0
CTA/Metra MVA
3.0

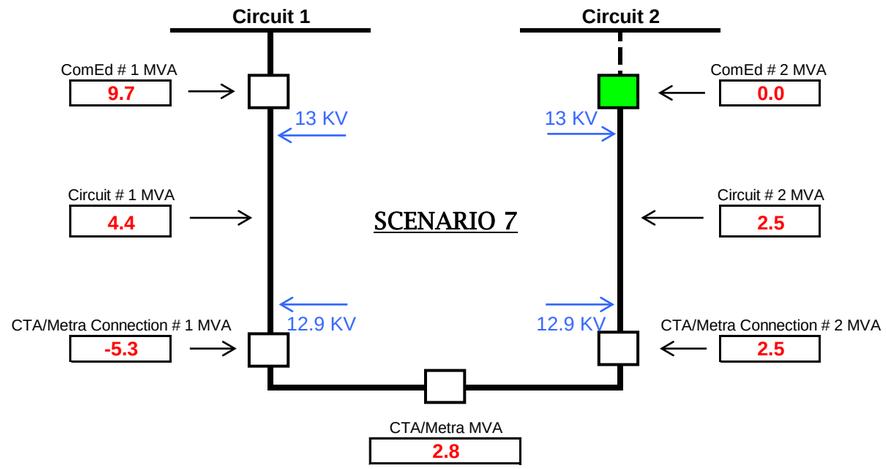
Circuit 1
Circuit 2
ComEd # 1 MVA
9.7
13 KV
13 KV
ComEd # 2 MVA
0.0
Circuit # 1 MVA
4.4
SCENARIO 7
Circuit # 2 MVA
2.5
CTA/Metra Connection # 1 MVA
-5.3
12.9 KV
12.9 KV
CTA/Metra Connection # 2 MVA
2.5
CTA/Metra MVA
2.8

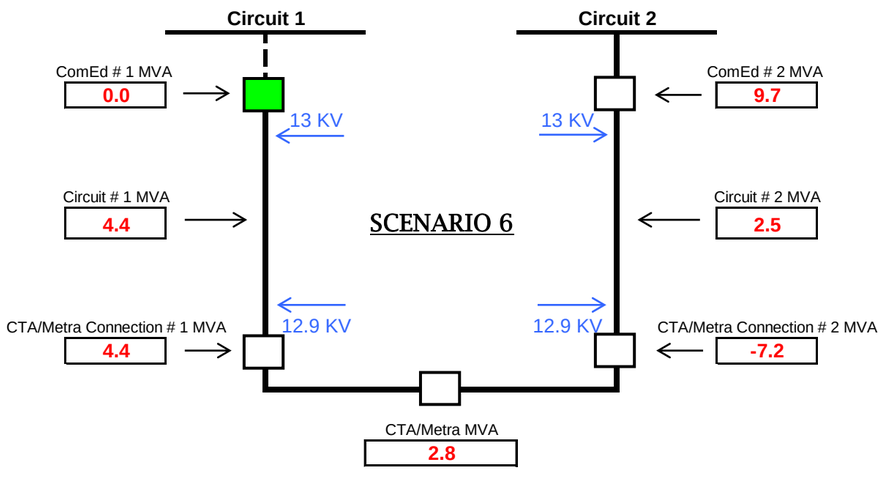
Circuit 1
Circuit 2
ComEd # 1 MVA
0.0
13 KV
13 KV
ComEd # 2 MVA
9.7
Circuit # 1 MVA
4.4
SCENARIO 6
Circuit # 2 MVA
2.5
CTA/Metra Connection # 1 MVA
4.4
12.9 KV
12.9 KV
CTA/Metra Connection # 2 MVA
-7.2
CTA/Metra MVA
2.8

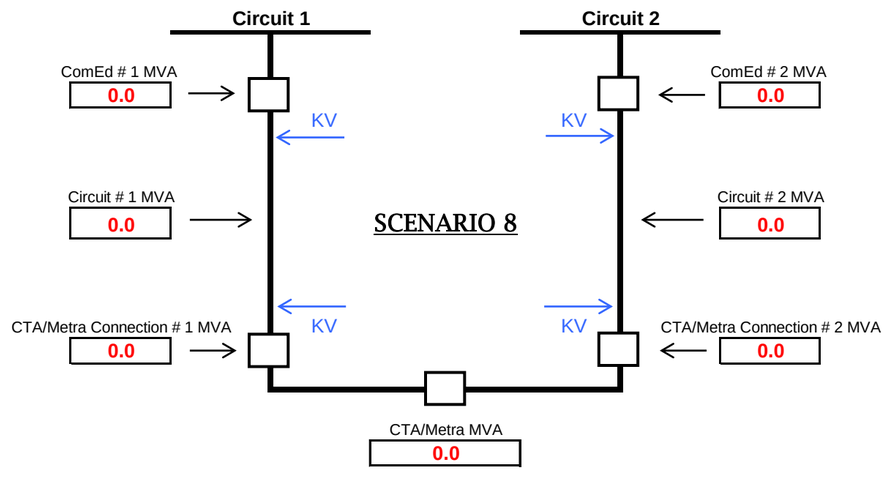
Circuit 1
Circuit 2
ComEd # 1 MVA
0.0
KV
KV
ComEd # 2 MVA
0.0
Circuit # 1 MVA
0.0
SCENARIO 8
Circuit # 2 MVA
0.0
CTA/Metra Connection # 1 MVA
0.0
KV
KV
CTA/Metra Connection # 2 MVA
0.0
CTA/Metra MVA
0.0

JJ CYME Study Information

[redacted]

- [redacted] load was obtained from CIMS for [redacted] via customer [redacted] kW with .[redacted] pf
- [redacted] substation load was obtained from CEDAR load information. Peak load for each feeding line is [redacted] with assumed PF= .

[redacted]

- [redacted]-load obtained from TED – [redacted] kVA with .[redacted] pf
- [redacted] load was obtained from [redacted] for [redacted] via customer [redacted] kW with .[redacted] pf
- [redacted]-load obtained from TED – [redacted] kVA with [redacted] pf

- [redacted] APT load information used.
  - [redacted] APT selected load date: [redacted]
  - [redacted] APT actual load on [redacted]
  - [redacted] APT WA on selected load date: [redacted]
  - [redacted] WA load: [redacted]
- [redacted] APT load information used.
  - [redacted] APT selected load date: [redacted]
  - [redacted] APT actual load on [redacted]
  - [redacted] APT WA on selected load date: [redacted]
  - [redacted] WA load: [redacted]
  -
- [redacted] load allocation method
  - Validate in the CYME model all transformers, ESS loads, including [redacted] for each feeding line at [redacted] per CEDAR.
  - Inside the [redacted] the BT breaker was identified as the zero point supporting [redacted] to loads on the [redacted] feeder network.
  - Enter feeder loads: [redacted].
  - Ignore motors
  - Open bus tie breaker [redacted] and allocate the loads.
  - Adjust pf. at source [redacted] and allocate to obtain an adjusted load PF of [redacted] on feeders [redacted] for [redacted]).
  - Close bus tie breaker [redacted] and run analysis.

- [redacted] midpoint KV taken at cable section 387867303 and endpoint KV taken at overhead section 387634627.

- [redacted] midpoint KV taken at overhead section 1063418906 and endpoint KV taken at cable section 387950432.

JJ CYME Study Results

Scenario	@ CTA -Connection #1 (MVA)	@ CTA - Connection #2 (MVA)	@ ComEd - Circuit #1 (MVA)	@ ComEd - Circuit #2 (MVA)	@ CTA -Connection #1 (kV)	@ CTA - Connection #2 (kV)	@ ComEd - Circuit #1 (kV)	@ ComEd - Circuit #2 (kV)	@ ComEd - Circuit #1 Midpoint (kV)	@ ComEd - Circuit #2 Midpoint (kV)	@ ComEd - Circuit #1 Endpoint (kV)	@ ComEd - Circuit #2 Endpoint (kV)
1	-0.7	-2.3	5.0	4.6	13.0	13.0	13.0	13.0	12.9	13.0	12.9	12.9
2	0.0	-3.0	0.0	5.3	0	13.0	13.0	13.0	0	13.0	0	12.9
3	0.0	-3.0	4.3	5.3	13.0	13.0	13.0	13.0	12.9	13.0	12.9	12.9
4	-3.0	0.0	7.2	0.0	12.9	0	13.0	13.0	12.9	0	12.9	0
5	-3.0	0.0	7.2	2.5	12.9	13.0	13.0	13.0	12.9	13.0	12.9	13.0
6	4.4	-7.2	0.0	9.7	12.9	12.9	13.0	13.0	12.8	12.9	12.8	12.9
7	-5.3	2.5	9.7	0.0	12.9	12.9	13.0	13.0	12.9	12.8	12.9	12.8

Scenario:

Scenario 1: @ CTA connection #1 and #2 closed, @ ComEd circuit #1 and #2 closed. This represents the normal condition.

Scenario 2: @ CTA connection #1 open and #2 closed, @ ComEd circuit #1 open and #2 closed. This represents an outage of ComEd circuit #1.

Scenario 3: @ CTA connection #1 and bus tie open and #2 closed, @ ComEd circuit #1 and #2 closed. This represents an outage of CTA Bus #1.

Scenario 4: @ CTA connection #1 closed and #2 open, @ ComEd circuit #1 closed and #2 open. This represents an outage of ComEd circuit #2.

Scenario 5: @ CTA connection #1 closed and #2 and bustie open, @ ComEd circuit #1 and #2 closed. This represents an outage of CTA Bus #2.

Scenario 6: @ CTA connection #1 and #2 closed, @ ComEd circuit #1 open and #2 closed. This represents loss of source for ComEd circuit #1.

Scenario 7: @ CTA connection #1 and #2 closed, @ ComEd circuit #1 closed and #2 open. This represents loss of source for ComEd circuit #2.

CONFIDENTIAL AND PROPRIETARY - CEII

JJ SUBSTATION

JJJ CYME Study Results

Scenario	@ CTA Connection #1 (MVA)	@ CTA Connection #2 (MVA)	@ ComEd - Circuit #1 (MVA)	@ ComEd - Circuit #2 (MVA)	@ ComEd - Circuit #3 (MVA)	@ ComEd - Circuit #4 (MVA)	SS (MVA)	SS (MVA)	SS (MVA)	SS (MVA)	SS (MVA)	SS (MVA)	SS (MVA)	@ CTA - Connection #1 (kV)	@ CTA - Connection #2 (kV)	ComEd - Circuit #1 (kV)	ComEd - Circuit #2 (kV)	ComEd - Circuit #3 (kV)	ComEd - Circuit #4 (kV)	SS (kV)	SS (kV)	SS (kV)	SS (kV)	SS (kV)	SS ((kV)	SS (kV)
1	-3.6	3.6	3.6	7.3	5.1	5.1	2.9	-3.5	-7.2	4.7	-3.8	1.6	-5.1	12.9	12.9	13.0	13.0	13.0	13.0	12.9	12.9	12.9	12.9	12.9	12.9	12.9
2	0.0	0.0	0.0	10.2	5.5	5.5	2.7	0.0	-10.1	4.1	-4.2	2.3	-5.5	0.0	12.9	0.0	13.0	13.0	13.0	12.9	12.9	12.9	12.9	12.9	12.9	12.9
3	0.0	0.0	0.0	10.2	5.5	5.5	2.7	0.0	-10.1	4.1	-4.2	2.3	-5.5	13.0	12.9	13.0	13.0	13.0	13.0	12.9	12.9	12.9	12.9	12.9	12.9	12.9
4	0.0	0.0	0.0	10.1	5.5	5.5	2.7	0.0	-10.0	4.1	-4.2	2.3	-5.5	13.0	0.0	13.0	13.0	13.0	13.0	12.9	12.9	12.9	12.9	12.9	12.9	12.9
5	0.0	0.0	0.0	10.1	5.5	5.5	2.7	0.0	-10.0	4.1	-4.2	2.3	-5.5	13.0	12.9	13.0	13.0	13.0	13.0	12.9	12.9	12.9	12.9	12.9	12.9	12.9
6	0.0	0.0	0.0	10.2	5.5	5.5	2.7	0.0	-10.1	4.1	-4.2	2.3	-5.5	12.9	12.9	12.9	13.0	13.0	13.0	12.9	12.9	12.9	12.9	12.9	12.9	12.9
7	-8.4	8.4	8.5	0.0	6.5	6.2	2.7	-8.3	0.0	2.5	-5.2	4.0	-6.2	12.9	12.8	13.0	12.8	13.0	13.0	12.8	12.8	12.8	12.8	12.9	12.9	12.9
8	-4.0	4.0	4.1	8.2	0.0	8.9	3.0	-4.0	-8.1	5.9	1.3	0.3	-8.9	12.9	12.9	13.0	13.0	12.9	13.0	12.9	12.9	12.9	12.9	12.9	12.9	12.9
9	-4.0	3.9	4.0	8.1	9.1	0.0	3.0	-3.9	-8.0	5.6	-7.7	0.4	0.0	12.9	12.9	13.0	13.0	13.0	12.9	12.9	12.9	12.9	12.9	12.9	12.9	12.9
10	-2.4	2.4	2.4	4.9	4.7	4.9	0.0	-2.4	-4.9	4.1	-3.4	0.8	-4.8	13.0	13.0	13.0	13.0	13.0	13.0	0.0	12.9	12.9	12.9	12.9	12.9	12.9
11	-3.8	3.8	3.8	7.4	5.0	5.0	5.1	-3.8	-7.3	2.8	-3.6	1.3	-5.0	12.9	12.9	13.0	13.0	13.0	13.0	12.9	12.9	12.9	12.9	12.9	12.9	12.9
12	-3.7	3.7	3.7	6.8	4.8	4.9	7.2	-3.7	-6.8	0.0	-3.5	1.1	-4.9	12.9	12.9	13.0	13.0	13.0	13.0	12.9	12.9	12.9	0.0	12.9	12.9	12.9
13	-4.1	4.1	4.1	8.3	4.3	4.4	3.0	-4.1	-8.3	6.1	-2.9	0.0	-4.4	12.9	12.9	13.0	13.0	13.0	13.0	12.9	12.9	12.9	12.9	12.9	0.0	12.9
14	0.0	0.0	0.0	0.0	9.4	8.8	0.0	0.0	0.0	0.0	-8.0	9.4	-8.7	13.0	13.0	13.0	13.0	13.0	13.0	12.4	0.0	0.0	0.0	12.9	12.9	12.9
15	-4.1	4.1	4.1	8.4	1.3	0.0	3.0	-4.1	-8.3	6.1	0.0	0.0	0.0	12.9	12.9	13.0	13.0	13.0	13.0	12.9	12.9	12.9	12.9	0.0	0.0	0.0
16	-8.4	8.4	8.5	0.0	6.5	6.2	2.7	-8.3	0.0	2.5	-5.2	4.0	-6.2	12.9	12.8	13.0	0.0	13.0	13.0	12.8	12.8	0.0	12.8	12.9	12.9	12.9
17	-3.9	3.9	3.9	8.0	0.0	7.9	2.9	-3.9	-7.9	5.6	0.0	0.6	-7.9	12.9	12.9	13.0	13.0	0.0	13.0	12.9	12.9	12.9	12.9	0.0	12.9	12.9
18	-4.0	3.9	4.0	8.1	9.1	0.0	3.0	-3.9	-8.0	5.8	-7.7	0.4	0.0	12.9	12.9	13.0	13.0	13.0	0.0	12.9	12.9	12.9	12.9	12.9	12.9	0.0

JJJ Cyme Results Comparison

SCENARIO = 1

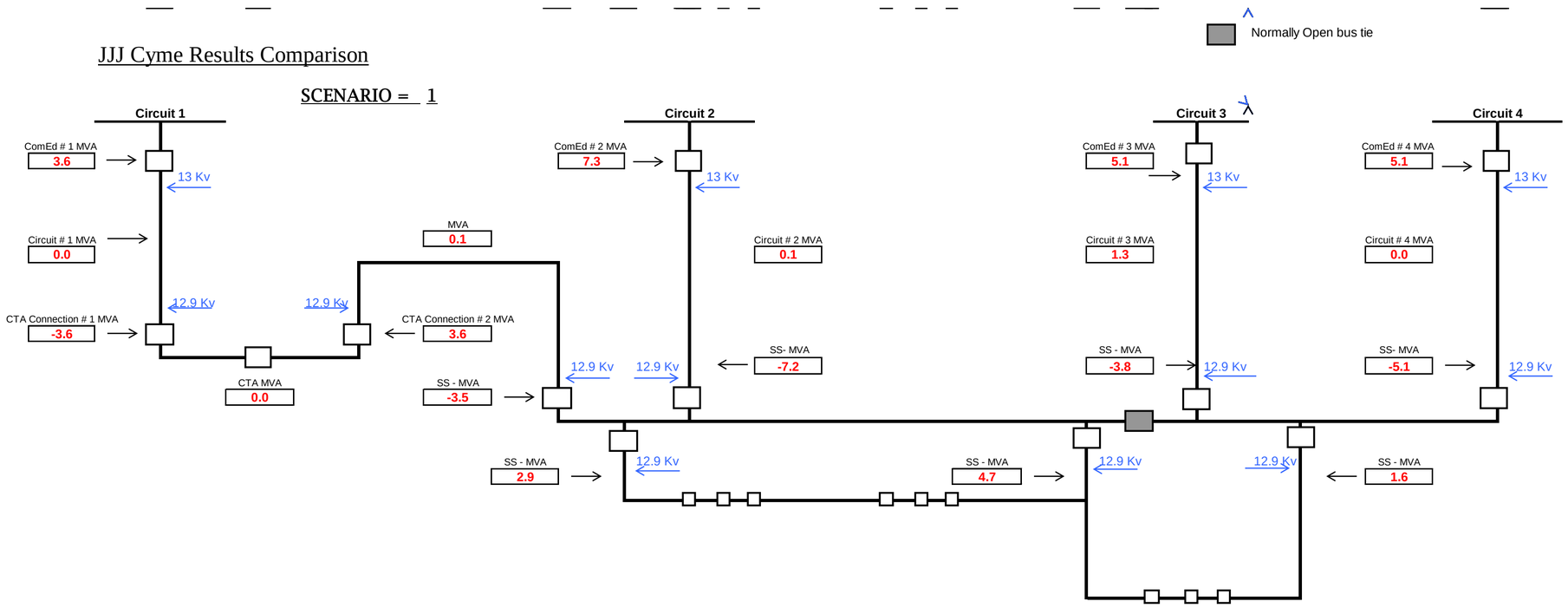

JJJ Cyme Results Comparison

SCENARIO = 2

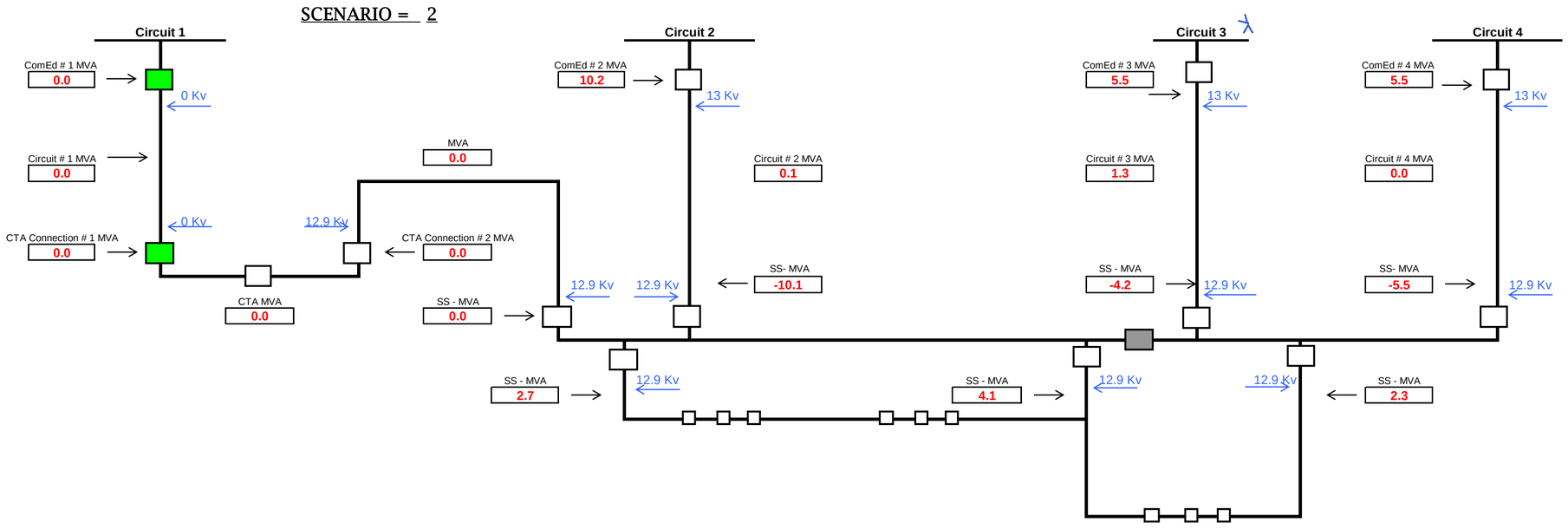

JJJ Cyme Results Comparison

SCENARIO = 3

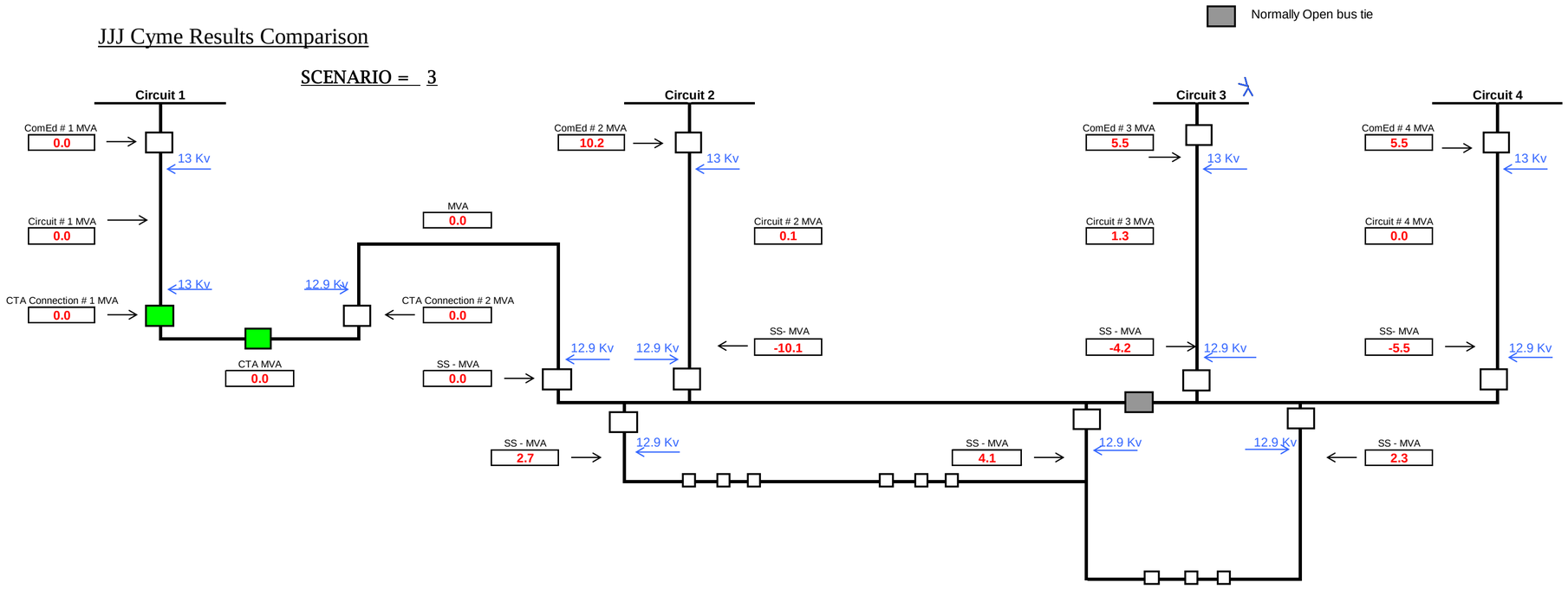

JJJ Cyme Results Comparison

SCENARIO = 4

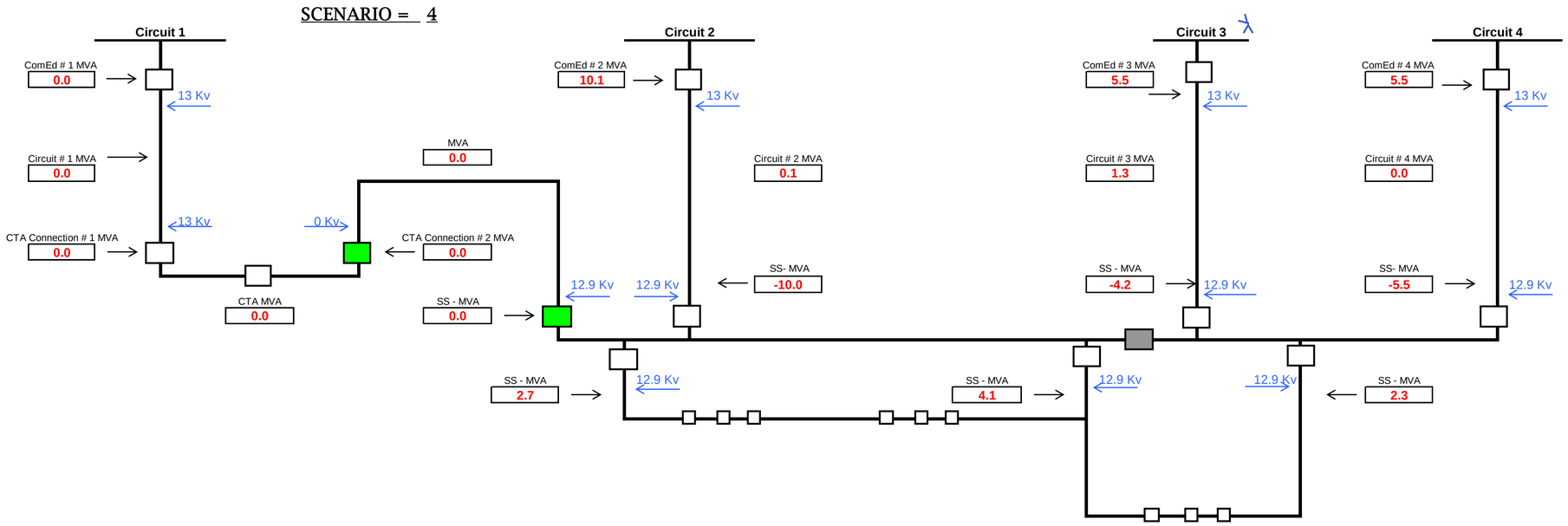

JJJ Cyme Results Comparison

SCENARIO = 5

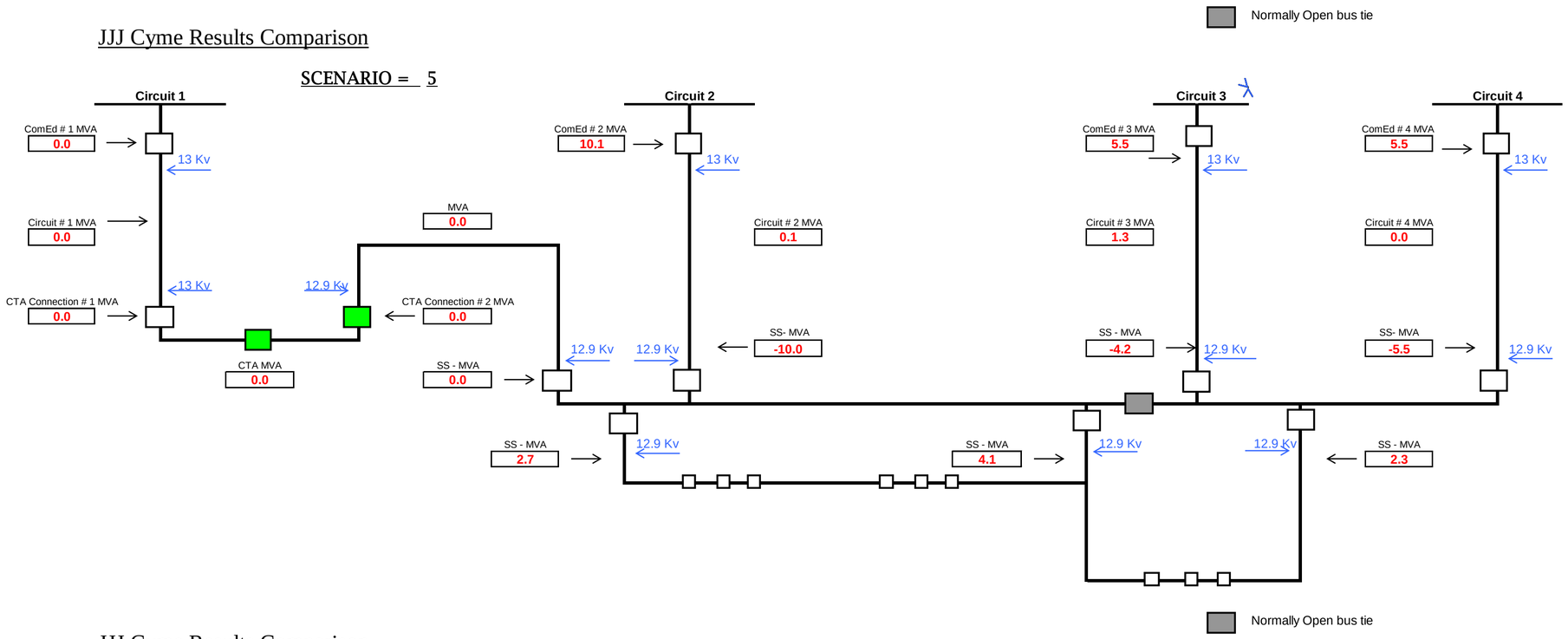

JJJ Cyme Results Comparison

SCENARIO = 6

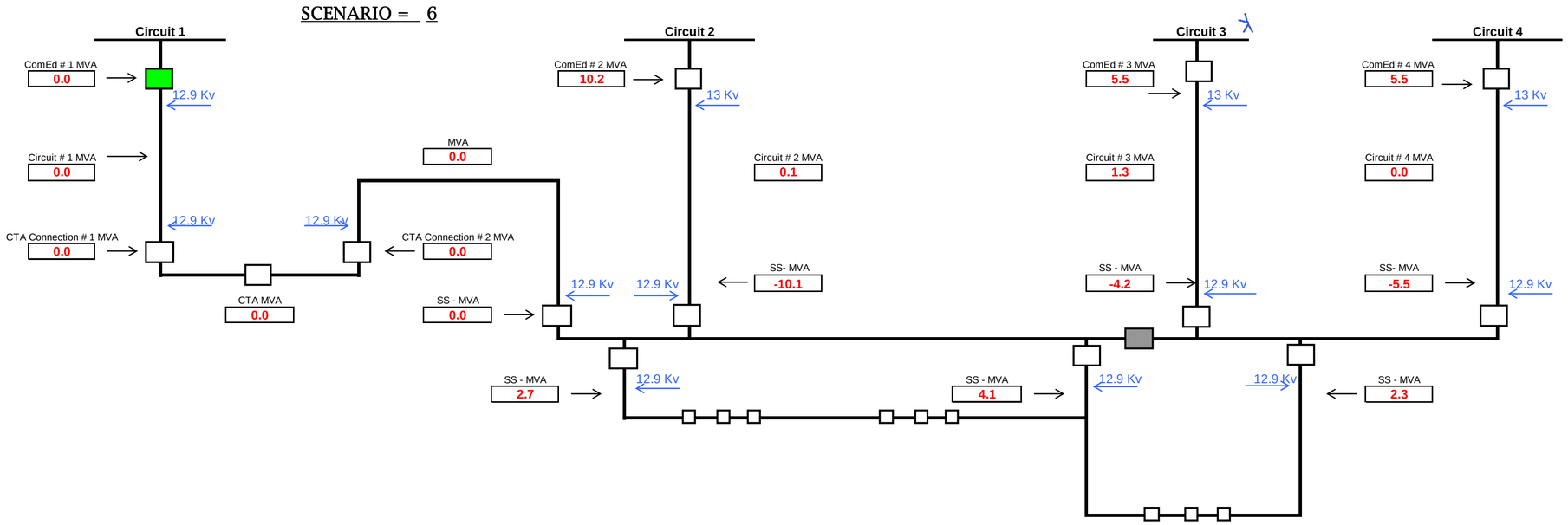

JJJ Cyme Results Comparison

SCENARIO = 7

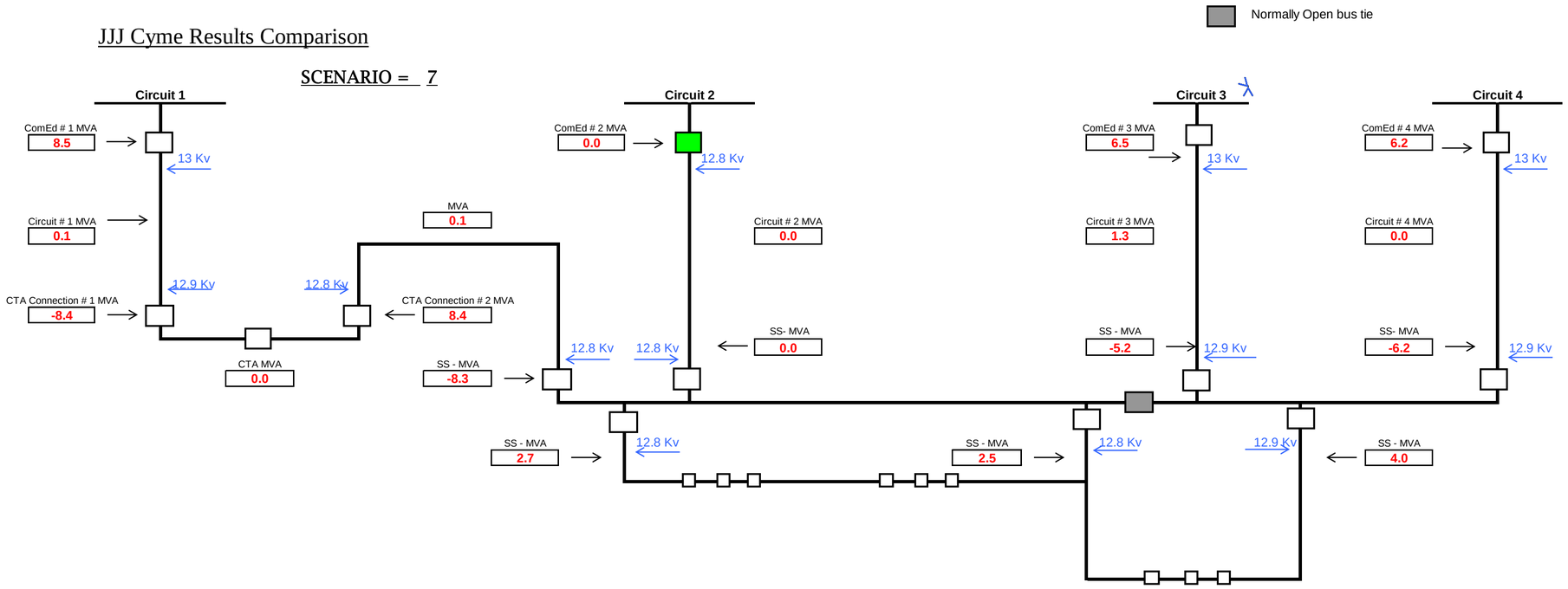

JJJ Cyme Results Comparison

SCENARIO = 8

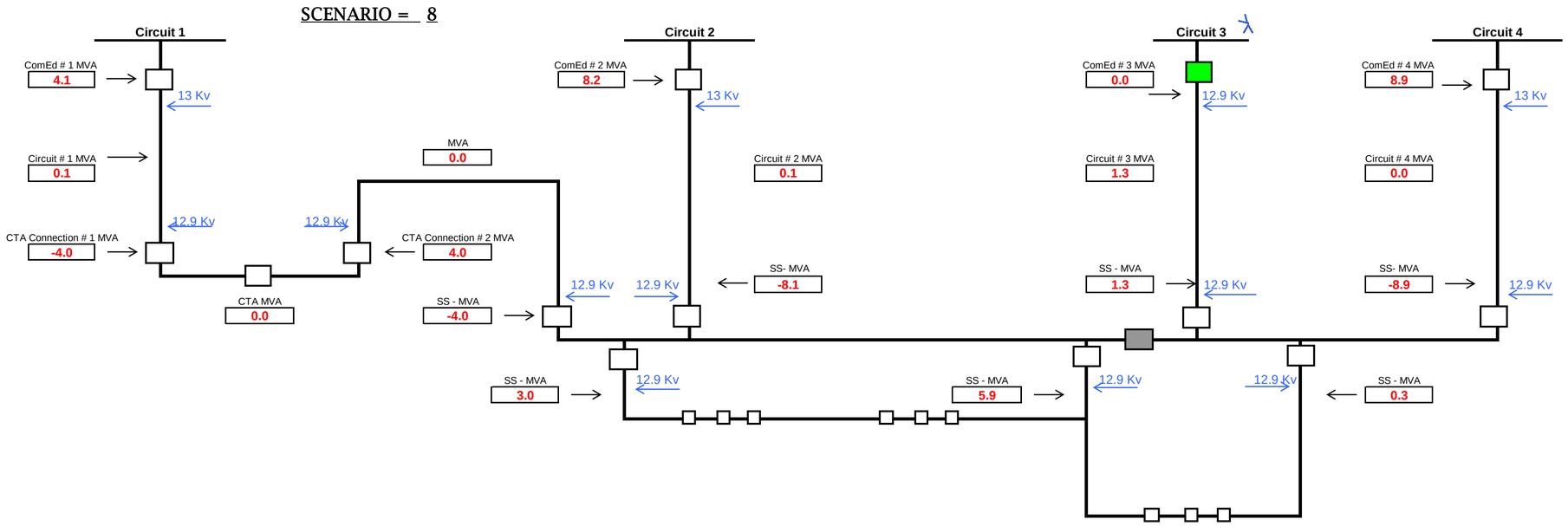

JJJ Cyme Results Comparison

SCENARIO = 9

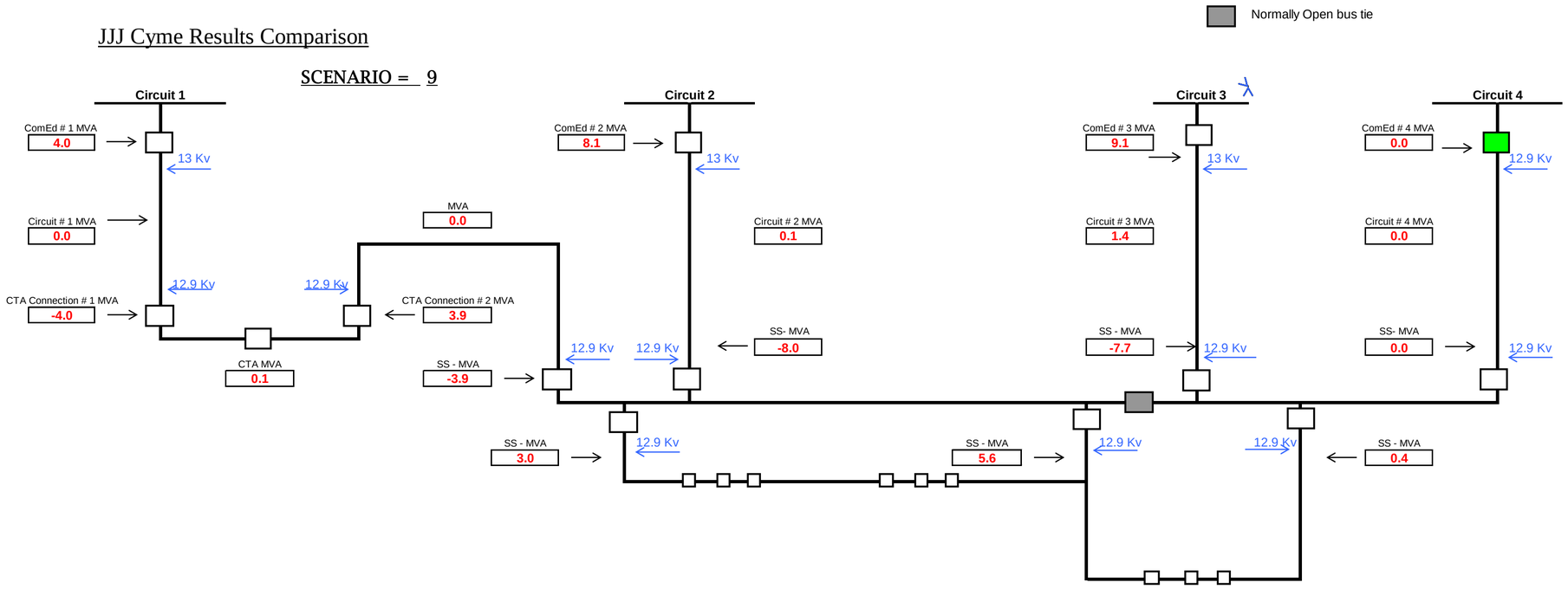

JJJ Cyme Results Comparison

SCENARIO = 10

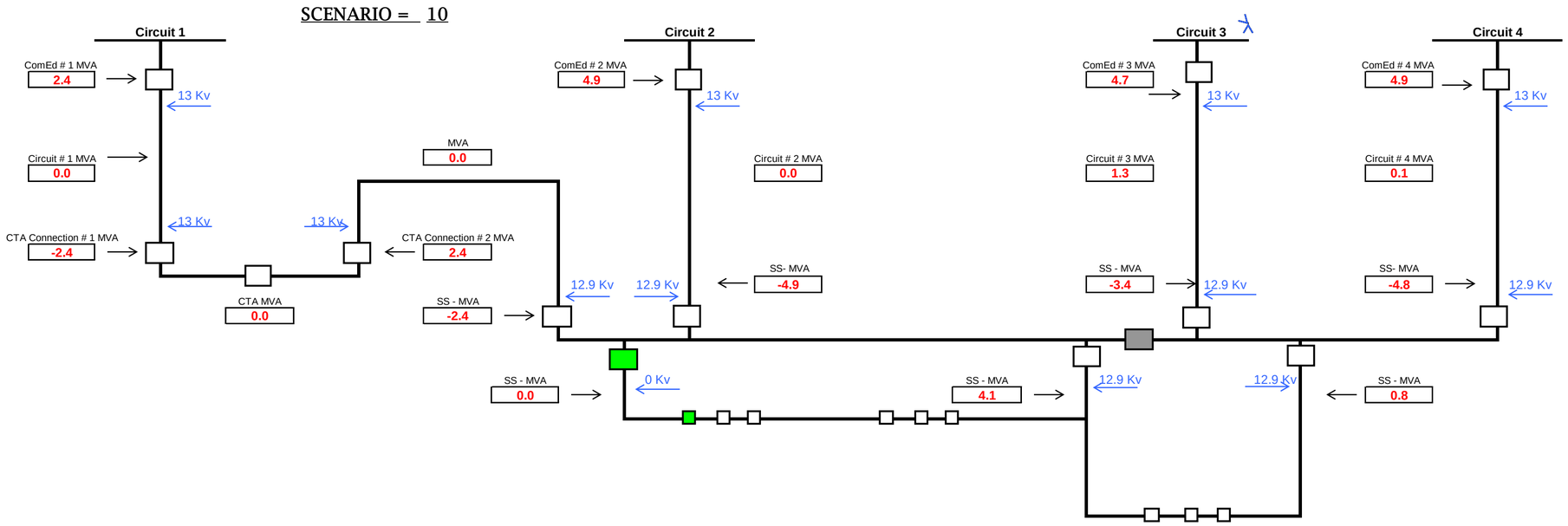

JJJ Cyme Results Comparison

SCENARIO = 11

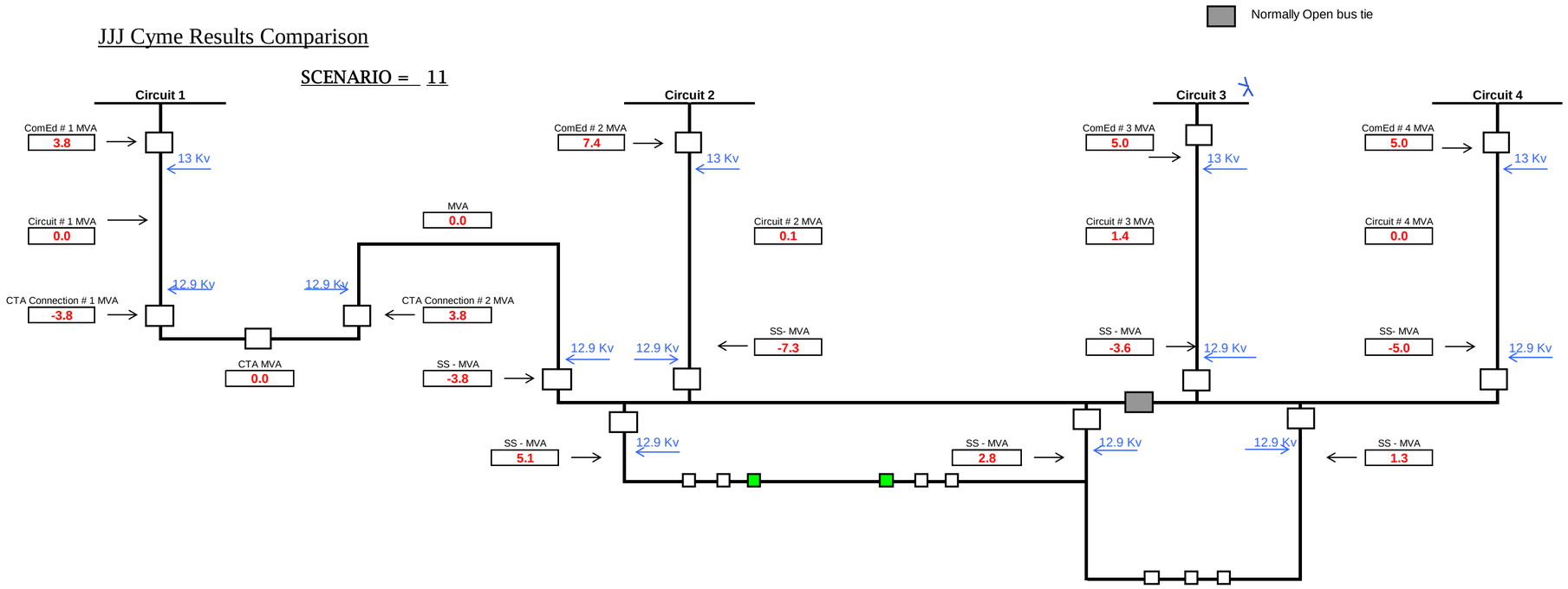

JJJ Cyme Results Comparison

SCENARIO = 12

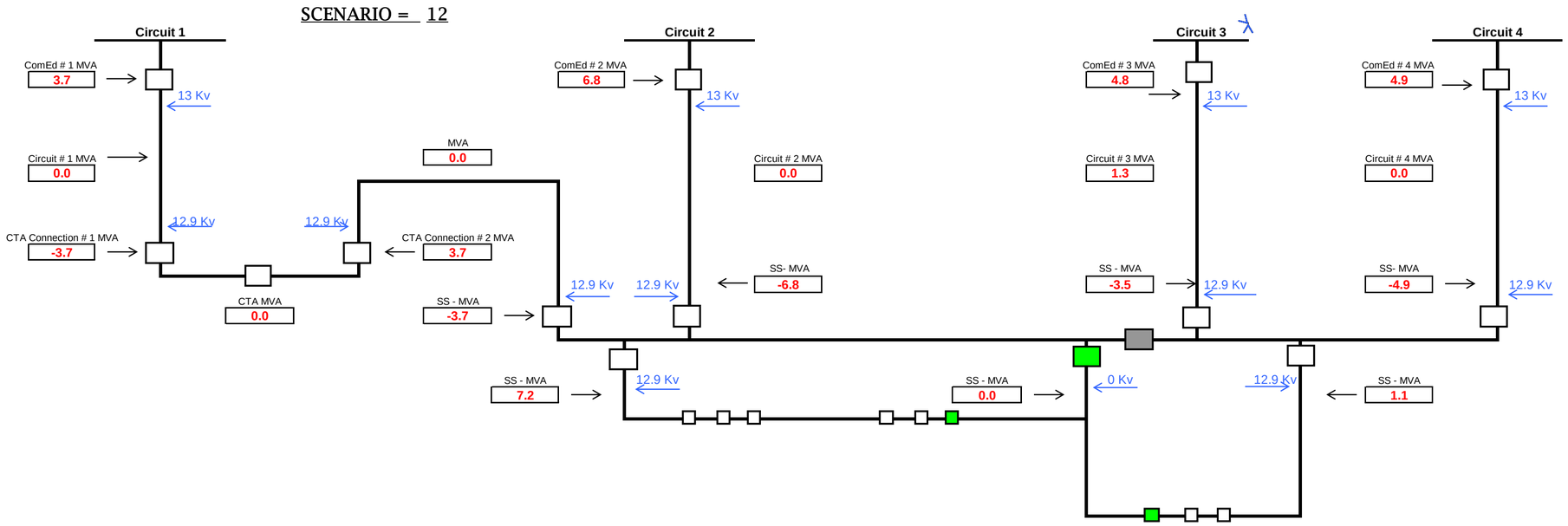

JJJ Cyme Results Comparison

SCENARIO = 13

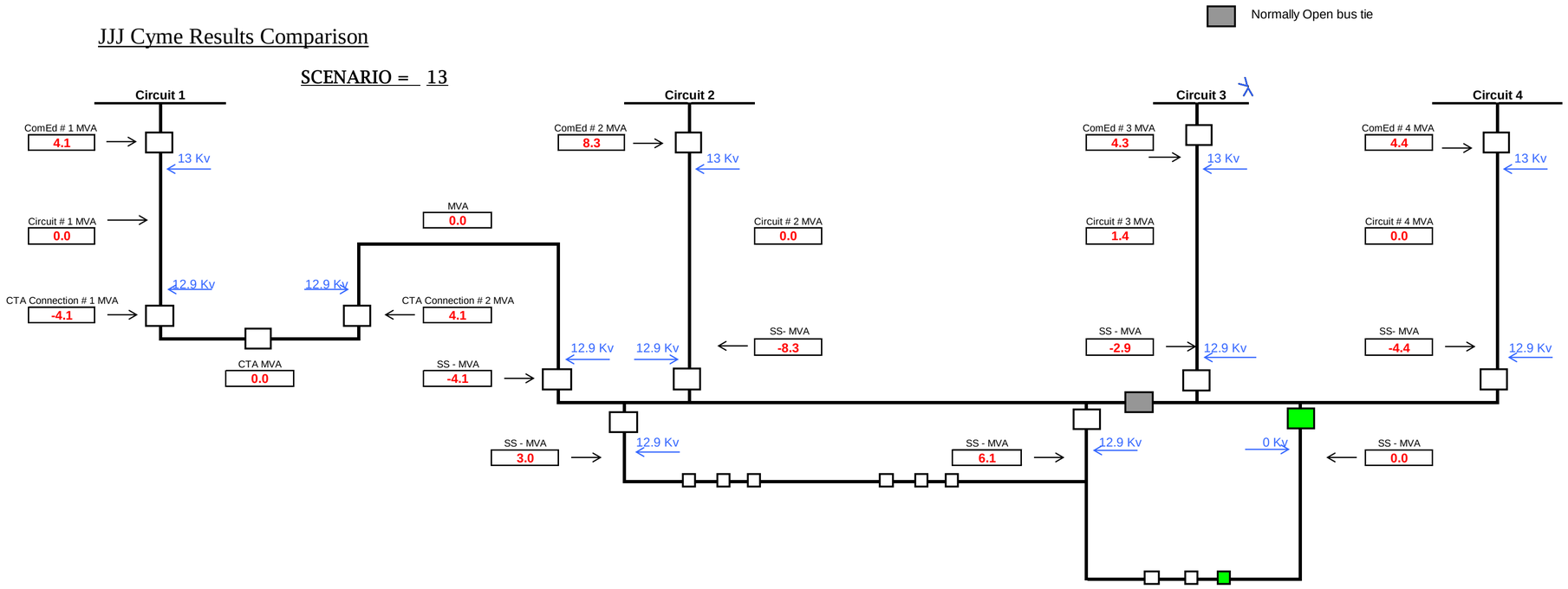

JJJ Cyme Results Comparison

SCENARIO = 14

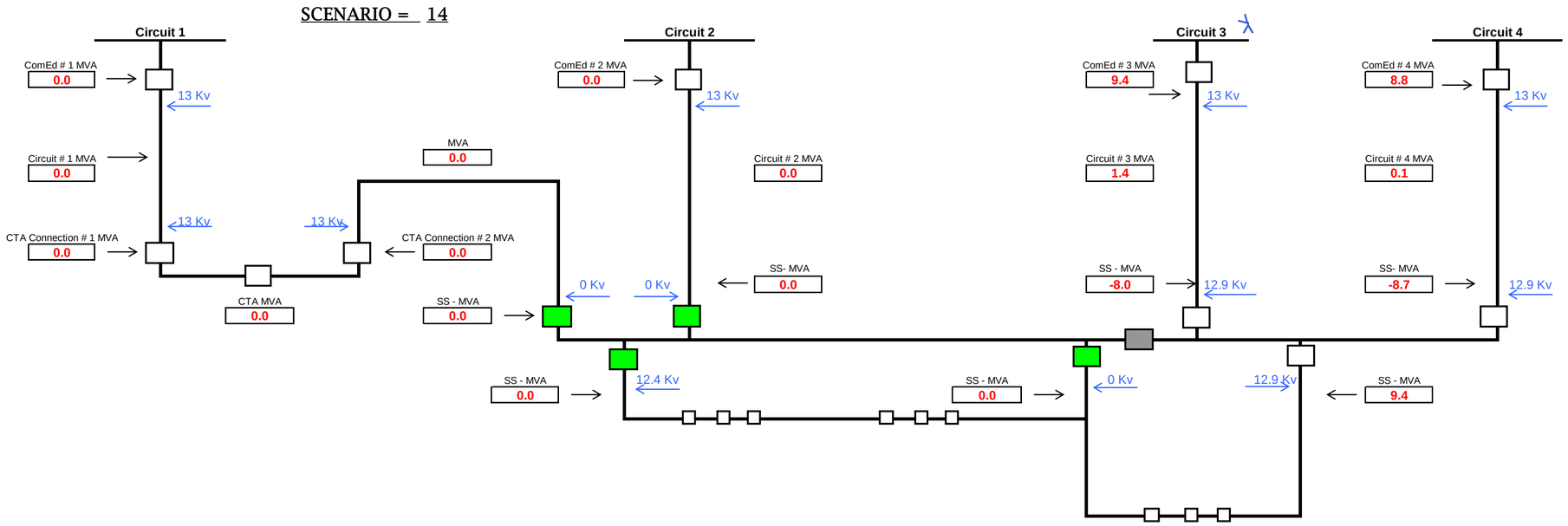

JJJ Cyme Results Comparison

SCENARIO = 15

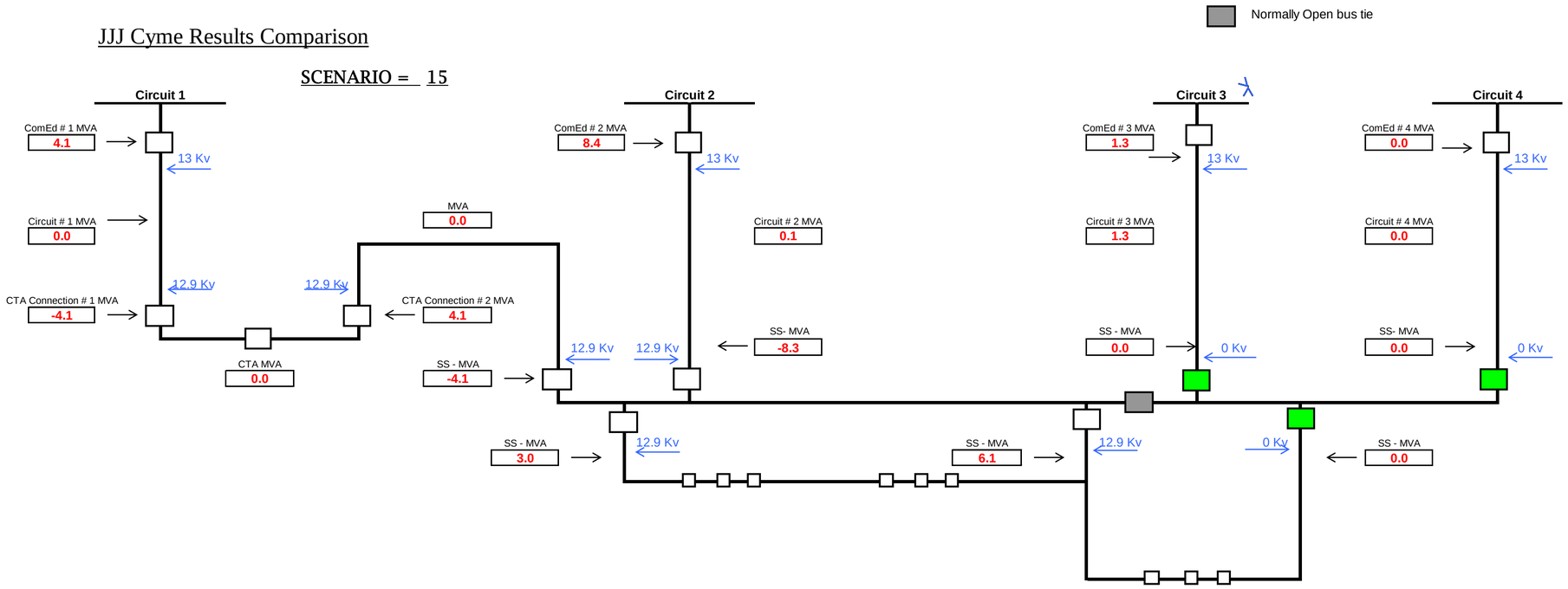

JJJ Cyme Results Comparison

SCENARIO = 16

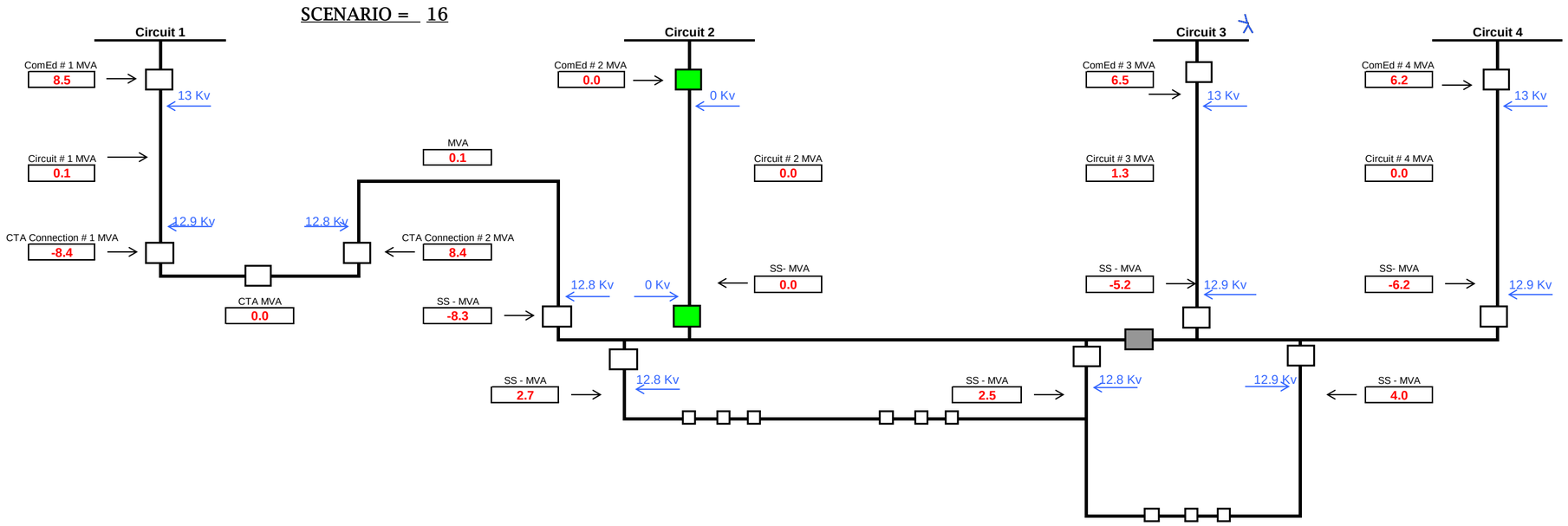

JJJ Cyme Results Comparison

SCENARIO = 17

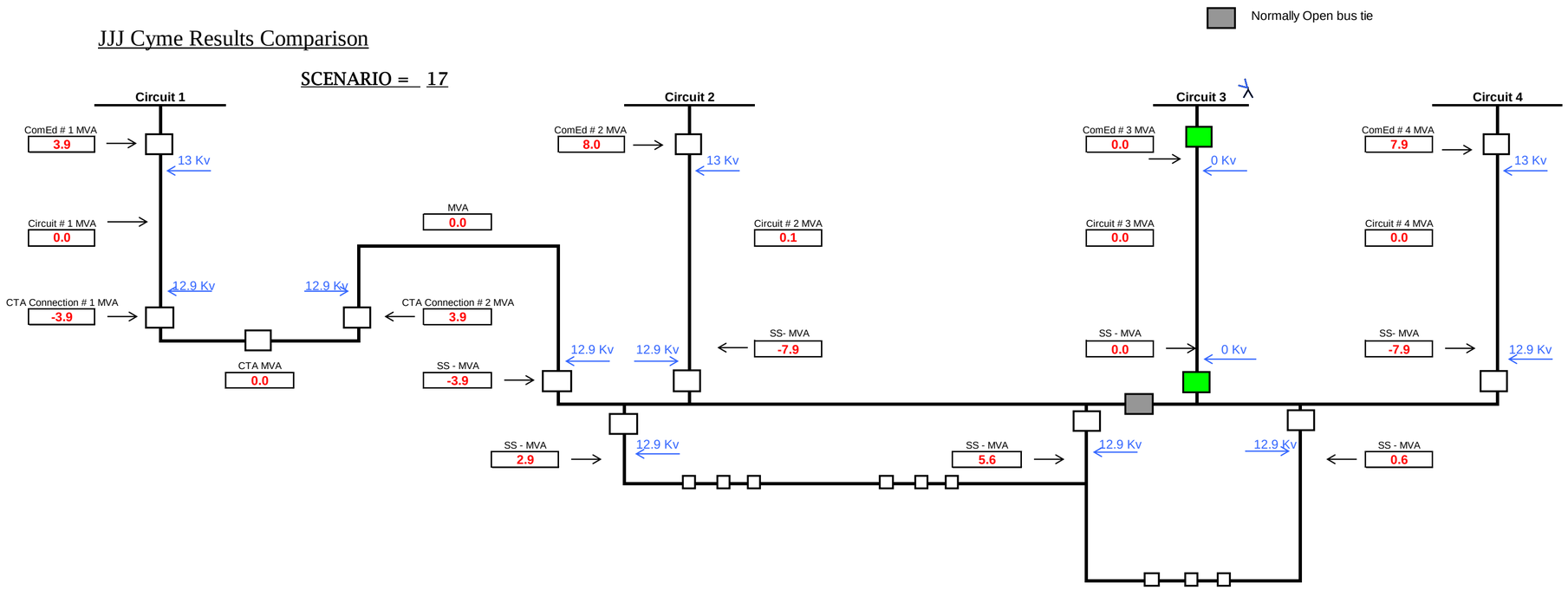

JJJ Cyme Results Comparison

SCENARIO = 18

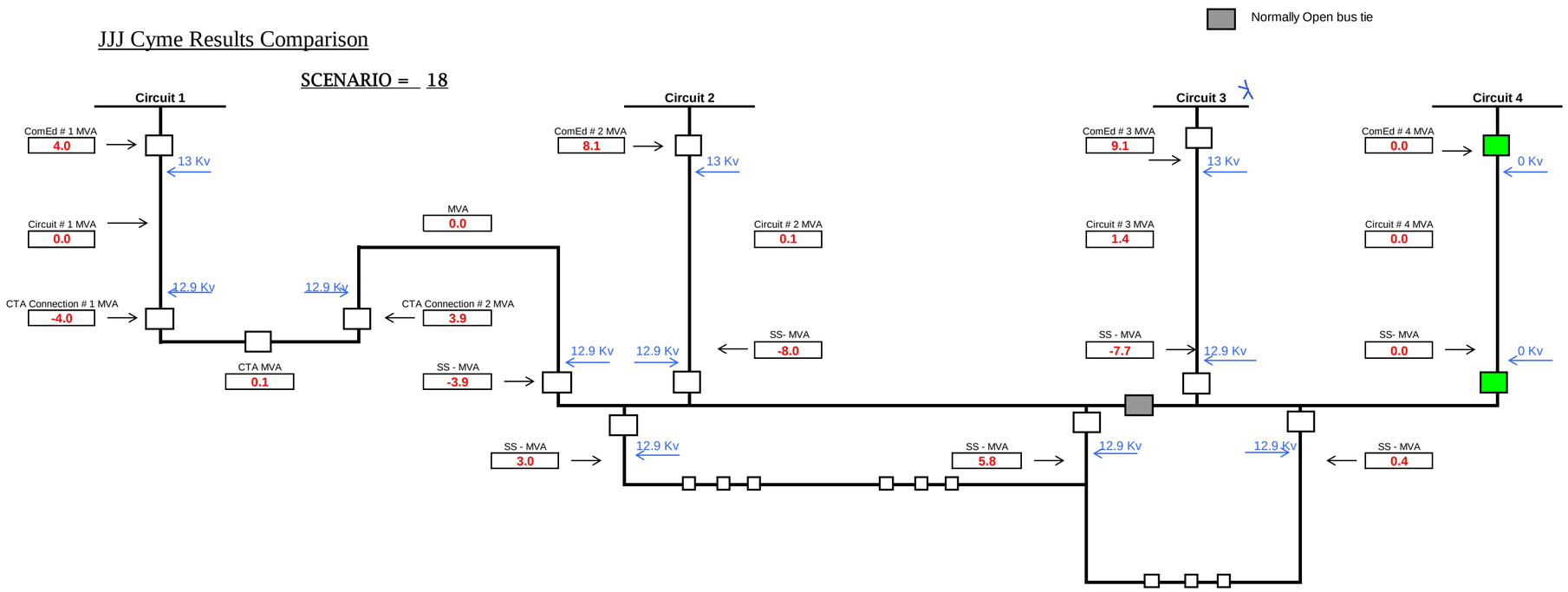

JJJ CYME Study Information

[redacted]

- [redacted]-load obtained by taking [redacted]transformer [redacted]with .[redacted]pf
- [redacted]load was obtained from CIMS for [redacted]via customer [redacted]kW with .[redacted]pf
- [redacted]load was obtained from CIMS for [redacted]via customer [redacted]with [redacted]pf
- [redacted]load was obtained from CIMS for [redacted]via customer [redacted]with .[redacted]pf
- [redacted]-load obtained from TED - [redacted] with .[redacted]pf
- [redacted]-load obtained from TED - [redacted] with .[redacted]pf
- [redacted]-load obtained from TED-[redacted] with [redacted]pf

[redacted]

- [redacted] substation load was obtained from CEDAR load information. Peak load for each feeding line is[redacted]with assumed PF=[redacted]

[redacted]

[redacted] (feeder [redacted])-load obtained from TED - [redacted]kVA with .[redacted]pf & [redacted]load obtained CIMS for [redacted]via customer [redacted] [redacted]& [redacted])-[redacted]kW with .[redacted]pf

- [redacted]- load was obtained from CIMS for [redacted]via customer [redacted]kW with .[redacted]pf
- [redacted]- load was obtained from CIMS for [redacted]via customer [redacted]kW with .[redacted]pf
- [redacted]- load was obtained from CIMS for [redacted]via customer [redacted]kW with .[redacted]pf

[redacted]

- [redacted]-load obtained by taking [redacted] of [redacted]KVA transformer - [redacted]kVA with [redacted]pf
- [redacted]load obtained by taking [redacted]of [redacted]KVA transformer - [redacted]kVA with . [redacted]pf

- [redacted]load information used.
  - [redacted]APT load date: [redacted]
  - [redacted]WA load[redacted]
  - With [redacted]of abnormal switching [redacted]load used[redacted]
- [redacted]load information used.
  - [redacted]APT load date: [redacted]
  - [redacted]WA load:[redacted]
  - With [redacted]of abnormal switching [redacted]load used[redacted]
- [redacted] APT load information used.
  - [redacted] APT selected load date: [redacted]
  - [redacted] APT actual load on [redacted]
  - [redacted] APT WA on selected load date: [redacted]

- [redacted] APT load information used.
  - [redacted] APT selected load date: [redacted]
  - [redacted] APT actual load on [redacted]
  - [redacted] APT WA on selected load date: [redacted]
  - [redacted] WA load: [redacted]
- [redacted] APT load information used.
  - [redacted] APT selected load date: [redacted]
  - [redacted] APT actual load on [redacted]
  - [redacted] APT WA on selected load date: [redacted]
  - [redacted] WA load: [redacted]
- [redacted] APT load information used.
  - [redacted] APT selected load date: [redacted]
  - [redacted] APT actual load on [redacted]
  - [redacted] APT WA on selected load date: [redacted]
  - [redacted] WA load: [redacted]

[redacted] load allocation method

- Validate in the CYME model all transformers, ESS loads, including [redacted] kW for each feeding line at [redacted] per CEDAR
- Inside the [redacted] the [redacted] breaker was identified as the zero point supporting [redacted] to loads on the [redacted] feeder network, Also between [redacted] and [redacted] breaker was identified as a zero point supporting [redacted] to loads on [redacted]. At [redacted] was identified as a zero point. Inside [redacted] breaker was identified as a zero point.
- Enter feeder loads [redacted] (Avg WA [redacted] minus the [redacted] contributed to [redacted] (Avg WA [redacted] plus the [redacted] supported from [redacted] ((Avg WA V plus the [redacted] supported from [redacted]), [redacted] (Avg WA [redacted] minus the [redacted] contributed to [redacted])
- Open zero points and allocate the loads.
- Adjust pf. at source [redacted] and allocate loads
- Close zero points and run analysis.

JJJ CYME Study Results

Scenario	@ CTA Connection #1 (MVA)	@ CTA Connection #2 (MVA)	@ ComEd Circuit #1 (MVA)	@ ComEd Circuit #2 (MVA)	@ ComEd Circuit #3 (MVA)	@ ComEd Circuit #4 (MVA)	SS (MVA)	SS (MVA)	SS (MVA)	SS (MVA)	SS (MVA)	SS (MVA)	SS (MVA)	@ CTA - Connection #1 (kV)	@ CTA - Connection #2 (kV)	ComEd Circuit #1 (kV)	ComEd Circuit #2 (kV)	ComEd Circuit #3 (kV)	ComEd Circuit #4 (kV)	SS (kV)	SS (kV)	SS (kV)	SS (kV)	SS (kV)	SS ((kV)	SS (kV)
1	-3.6	3.6	3.6	7.3	5.1	5.1	2.9	-3.5	-7.2	4.7	-3.8	1.6	-5.1	12.9	12.9	13.0	13.0	13.0	13.0	12.9	12.9	12.9	12.9	12.9	12.9	12.9
2	0.0	0.0	0.0	10.2	5.5	5.5	2.7	0.0	-10.1	4.1	-4.2	2.3	-5.5	0.0	12.9	0.0	13.0	13.0	13.0	12.9	12.9	12.9	12.9	12.9	12.9	12.9
3	0.0	0.0	0.0	10.2	5.5	5.5	2.7	0.0	-10.1	4.1	-4.2	2.3	-5.5	13.0	12.9	13.0	13.0	13.0	13.0	12.9	12.9	12.9	12.9	12.9	12.9	12.9
4	0.0	0.0	0.0	10.1	5.5	5.5	2.7	0.0	-10.0	4.1	-4.2	2.3	-5.5	13.0	0.0	13.0	13.0	13.0	13.0	12.9	12.9	12.9	12.9	12.9	12.9	12.9
5	0.0	0.0	0.0	10.1	5.5	5.5	2.7	0.0	-10.0	4.1	-4.2	2.3	-5.5	13.0	12.9	13.0	13.0	13.0	13.0	12.9	12.9	12.9	12.9	12.9	12.9	12.9
6	0.0	0.0	0.0	10.2	5.5	5.5	2.7	0.0	-10.1	4.1	-4.2	2.3	-5.5	12.9	12.9	12.9	13.0	13.0	13.0	12.9	12.9	12.9	12.9	12.9	12.9	12.9
7	-8.4	8.4	8.5	0.0	6.5	6.2	2.7	-8.3	0.0	2.5	-5.2	4.0	-6.2	12.9	12.8	13.0	12.8	13.0	13.0	12.8	12.8	12.8	12.8	12.9	12.9	12.9
8	-4.0	4.0	4.1	8.2	0.0	8.9	3.0	-4.0	-8.1	5.9	1.3	0.3	-8.9	12.9	12.9	13.0	13.0	12.9	13.0	12.9	12.9	12.9	12.9	12.9	12.9	12.9
9	-4.0	3.9	4.0	8.1	9.1	0.0	3.0	-3.9	-8.0	5.6	-7.7	0.4	0.0	12.9	12.9	13.0	13.0	13.0	12.9	12.9	12.9	12.9	12.9	12.9	12.9	12.9
10	-2.4	2.4	2.4	4.9	4.7	4.9	0.0	-2.4	-4.9	4.1	-3.4	0.8	-4.8	13.0	13.0	13.0	13.0	13.0	13.0	0.0	12.9	12.9	12.9	12.9	12.9	12.9
11	-3.8	3.8	3.8	7.4	5.0	5.0	5.1	-3.8	-7.3	2.8	-3.6	1.3	-5.0	12.9	12.9	13.0	13.0	13.0	13.0	12.9	12.9	12.9	12.9	12.9	12.9	12.9
12	-3.7	3.7	3.7	6.8	4.8	4.9	7.2	-3.7	-6.8	0.0	-3.5	1.1	-4.9	12.9	12.9	13.0	13.0	13.0	13.0	12.9	12.9	12.9	0.0	12.9	12.9	12.9
13	-4.1	4.1	4.1	8.3	4.3	4.4	3.0	-4.1	-8.3	6.1	-2.9	0.0	-4.4	12.9	12.9	13.0	13.0	13.0	13.0	12.9	12.9	12.9	12.9	12.9	0.0	12.9
14	0.0	0.0	0.0	0.0	9.4	8.8	0.0	0.0	0.0	0.0	-8.0	9.4	-8.7	13.0	13.0	13.0	13.0	13.0	13.0	12.4	0.0	0.0	0.0	12.9	12.9	12.9
15	-4.1	4.1	4.1	8.4	1.3	0.0	3.0	-4.1	-8.3	6.1	0.0	0.0	0.0	12.9	12.9	13.0	13.0	13.0	13.0	12.9	12.9	12.9	12.9	0.0	0.0	0.0
16	-8.4	8.4	8.5	0.0	6.5	6.2	2.7	-8.3	0.0	2.5	-5.2	4.0	-6.2	12.9	12.8	13.0	0.0	13.0	13.0	12.8	12.8	0.0	12.8	12.9	12.9	12.9
17	-3.9	3.9	3.9	8.0	0.0	7.9	2.9	-3.9	-7.9	5.6	0.0	0.6	-7.9	12.9	12.9	13.0	13.0	0.0	13.0	12.9	12.9	12.9	12.9	0.0	12.9	12.9
18	-4.0	3.9	4.0	8.1	9.1	0.0	3.0	-3.9	-8.0	5.8	-7.7	0.4	0.0	12.9	12.9	13.0	13.0	13.0	0.0	12.9	12.9	12.9	12.9	12.9	12.9	0.0

Scenario:

Scenario 1: @ CTA/Metra connection #1 and #2 closed, @ ComEd circuit #1, #2, #3 and #4 closed. This represents the normal condition.

Scenario 2: @ CTA/Metra connection #1 open and #2 closed, @ ComEd circuit #1 open; #2, #3 and #4 closed. This represents an outage of ComEd circuit #1.

Scenario 3: @ CTA/Metra connection #1 and bus tie open and #2 closed, @ ComEd circuit #1, #2, #3 and #4 closed. This represents an outage of CTA/Metra Bus #1.

Scenario 4: @ CTA/Metra connection #1 closed and #2 open @ ComEd circuit #1, #2, #3 and #4 closed; @ [redacted] breaker [redacted] open. This represents an outage on [redacted].

Scenario 5: @ CTA/Metra connection #2 and bus tie open and #1 closed,, @ ComEd circuit #1, #2, #3 and #4 closed. This represents an outage of CTA/Metra Bus #2.

Scenario 6: @ CTA/Metra connection #1 and #2 closed, @ ComEd circuit #1 open; #2, #3 and #4 closed. This represents loss of source for ComEd circuit #1.

Scenario 7: @ CTA/Metra connection #1 and #2 closed, @ ComEd circuit #1, #3 and #4 closed; #2 open. This represents loss of source for ComEd circuit #2.

Scenario 8: @ CTA/Metra connection #1 and #2 closed, @ ComEd circuit #1, #2 and #4 closed; #3 open. This represents loss of source for ComEd circuit #3.

Scenario 9: @ CTA/Metra connection #1 and #2 closed, @ ComEd circuit #1, #2 and #3 closed; #4 open. This represents loss of source for ComEd circuit #4.

Scenario 10: @ CTA/Metra connection #1 and #2 closed, @ ComEd circuit #1, #2, #3 and #4 closed. @ @[redacted] breaker open @ [redacted] breaker open.
This represents a loss of cable @[redacted].

Scenario 11: @ CTA/Metra connection #1 and #2 closed, @ ComEd circuit #1, #2, #3 and #4 closed. @ [redacted] breaker open and @[redacted] breaker open
This represents a loss of cable@[redacted].

Scenario 12: @ CTA/Metra connection #1 and #2 closed, @ ComEd circuit #1, #2, #3 and #4 closed. @ [redacted] breaker open @ [redacted] breaker open @[redacted] open.
This represents a loss of cable @[redacted]

Scenario 13: @ CTA/Metra connection #1 and #2 closed, @ ComEd circuit #1, #2, #3 and #4 closed. @ [redacted] breaker open @ [redacted] breaker open
This represents a loss of cable [redacted]

Scenario 14: @ CTA/Metra connection #1 and #2 closed, @ ComEd circuit #1, #2, #3 and #4 closed @[redacted] and [redacted] breaker open.
This represents a loss of Bus#1 & Bus#2 at [redacted].

Scenario 15: @ CTA/Metra connection #1 and #2 closed, @ ComEd circuit #1, #2, #3 and #4 closed @ [redacted] breaker open.
This represents a loss of Bus#3 & Bus#4 at [redacted].

Scenario 16: @ CTA/Metra connection #1 and #2 closed, @ ComEd circuit #2 open; #1, #3 and #4 closed. @ SS[redacted] open. This represents an outage of ComEd circuit #2.

Scenario 17: @ CTA/Metra connection #1 and #2 closed, @ ComEd circuit #3 open; #1, #2 and #4 closed. @ SS[redacted] open. This represents an outage of ComEd circuit #3.

Scenario 18: @ CTA/Metra connection #1 and #2 closed, @ ComEd circuit #4 open; #1, #2 and #3 closed. @ SS[redacted] open. This represents an outage of ComEd circuit #4.

CONFIDENTIAL AND PROPRIETARY - CEII

JJJ SUBSTATION