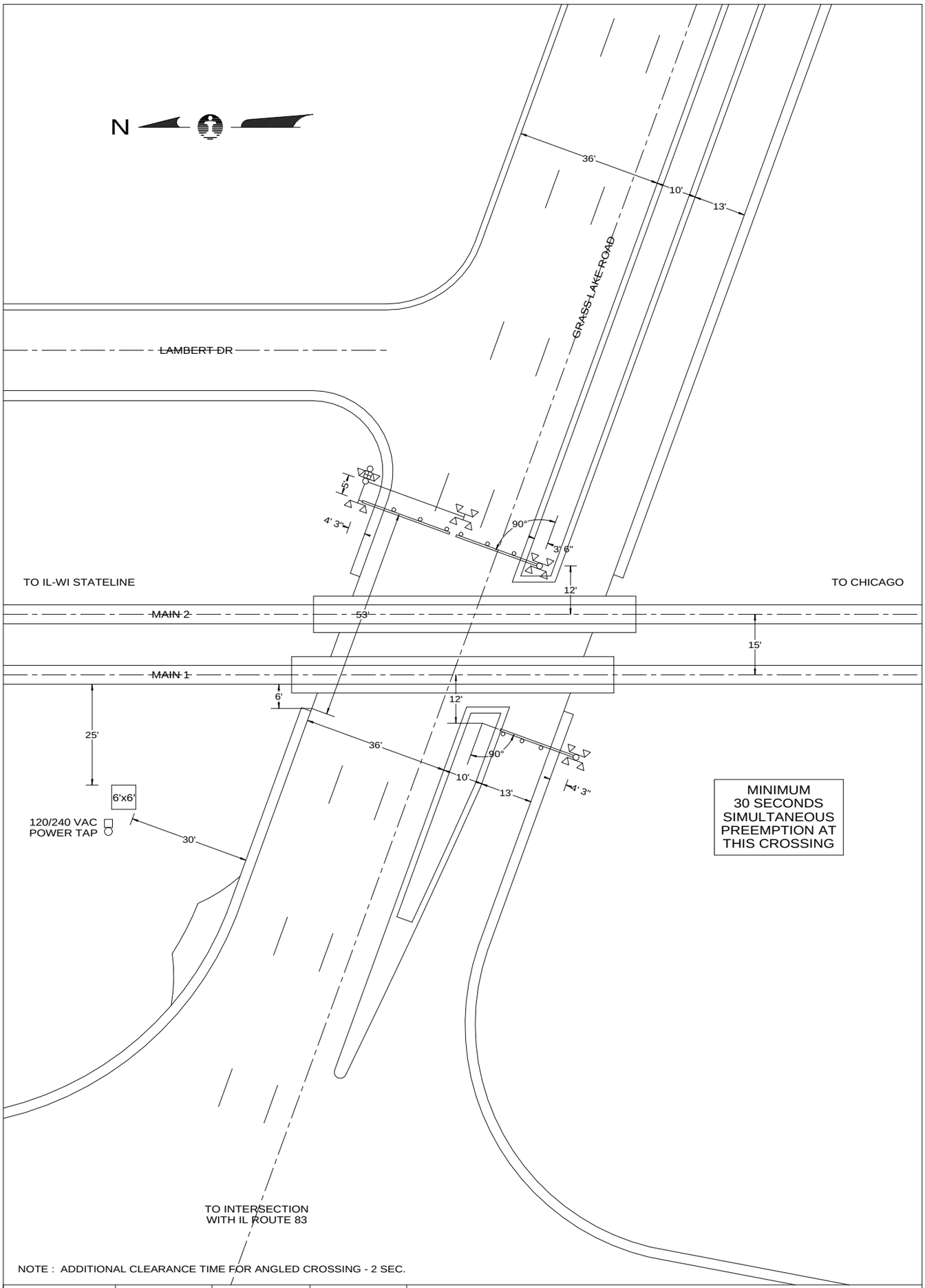

NOTE : ADDITIONAL CLEARANCE TIME FOR ANGLED CROSSING - 2 SEC.

QUADRANT	NE	E MEDIAN	SW
STANDARD AFLS	LED	LED	LED
CANTILEVER, FT.	WTF COMBO - 26' ARM	-	-
GATE, FT.	OFFSET - 24' ARM	22	20
ADDED LIGHTS	-	-	-
BARRICADE	-	-	-
MULTI-TK SIGN	2 TRACK	2 TRACK	2 TRACK
BELL	X	-	-
REVISIONS	9-22-10		

CN

SIGNALS & COMMUNICATIONS, ENGINEERING DEPARTMENT

CITY & STATE: LAKE VILLA, IL	WAU-53.03-X
CROSSING: GRASS LAKE ROAD	DATE: NOV 24, 2008
WAU - 53.03	DOT - 689 739R
CHICAGO DIVISION	WAUKESHA SUBDIVISION
IN SERVICE	SCALE: 1"=30' / DRAWN BY: AVS

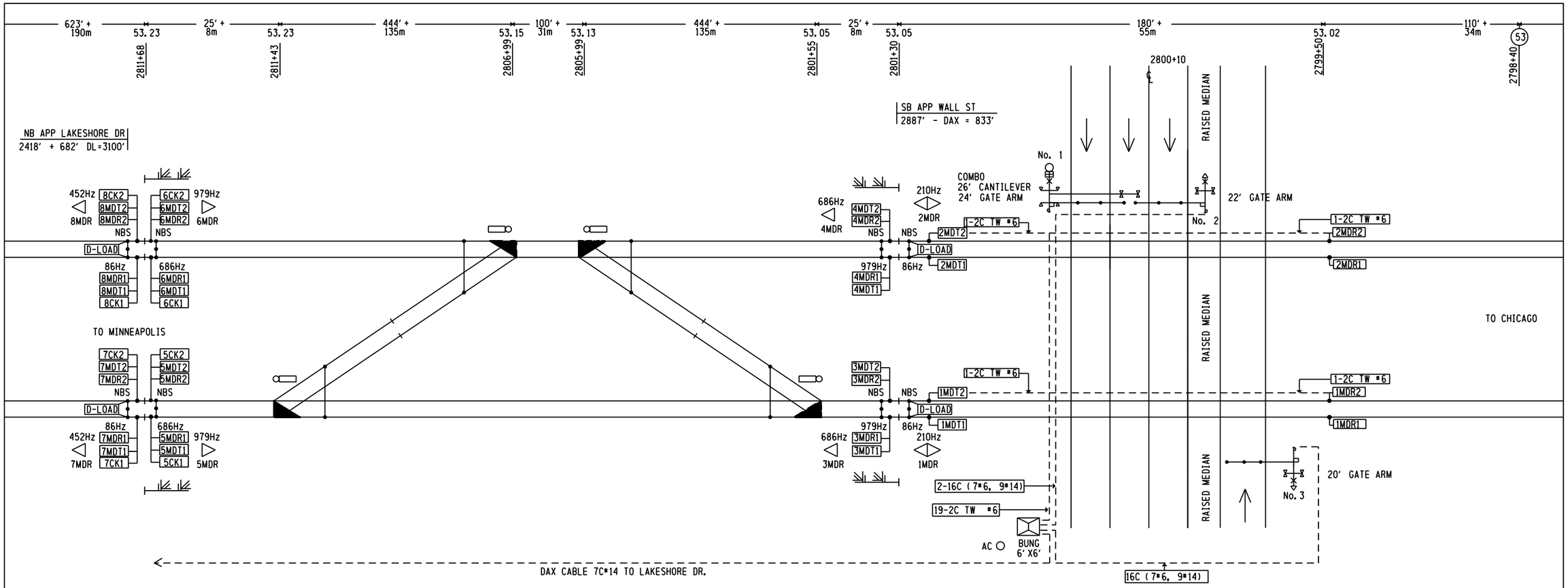

NOTES

- USE #10 AWG STRANDED WIRE MINIMUM UNLESS OTHERWISE NOTED.
- WIRES SHOWN DOTTED, END ON DIFFERENT PAGE.

MATCH TO CM 53.72

MATCH TO CM 52.50

PROPOSED D	PROPOSED M	PROPOSED Y	REVISIONS	D	C	COMPLETED D	COMPLETED M	COMPLETED Y	C
			IN SERVICE	SLT	JEP	31	12	83	
			ADD SECOND MAIN	NRB	JEP	16	05	03	
			WIDEN XING-NEW GATES	PEA	MKN	22	09	10	DBB

REGION SOUTHERN

SUB. WAUKESHA 435

SIGNALS AND COMMUNICATIONS HOMEWOOD

DES. SLT

28 AUGUST 2000

CH. JEP

TRACK CONNECTIONS

LAKE VILLA, IL

GRASS LAKE ROAD

WAU-053.03-01

DOT-689 739R

17

- NOTES -

UNLESS OTHERWISE NOTED, MINIMUM CASE WIRE SIZE IS #16 AWG.
TWIST ALL WIRE PAIRS MINIMUM TWO TURNS PER FOOT.
CC- HARMON MODEL CROSSING CONTROL UNIT - 2 (CCU-2)
RIM - HARMON RECORDER INTERFACE MODULE
HDL - HD/LINK MODULE

⏚ GROUND BUSS. KEEP LENGTHS AS SHORT AS POSSIBLE.
AVOID SHARP BENDS. #6 AWG MINIMUM TRACK WIRE SIZE.

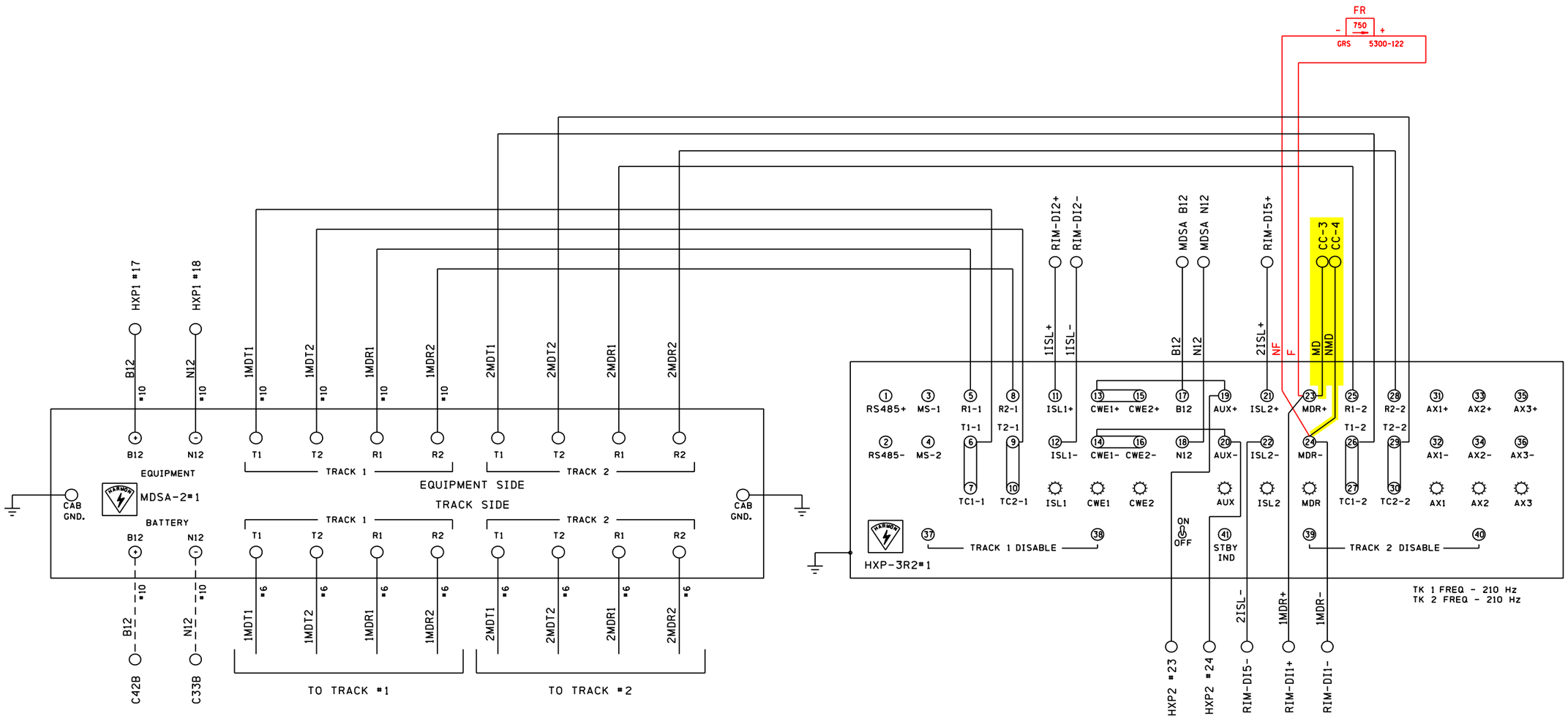

PROPOSED
DESIGN NO. 11-0491
RED-IN YELLOW-OUT

AS INSTALLED
DATE _____
BY _____
(PRINT NAME)

PROPOSED D	M	Y	REVISIONS	D	C	COMPLETED D	M	Y	C
			IN SERVICE	SLT	JEP	31	12	83	
			ADD SECOND MAIN	NRB	JEP	16	05	03	
			WIDEN XING-NEW GATES	PEA	MKN	22	09	10	DBB
08	08	11	UPGR TRAFFIC SIG INT'R	AVS	JEP				

REGION SOUTHERN
SUB. WAUKESHA 435
SIGNALS AND COMMUNICATIONS HOMEWOOD
28 AUGUST 2000
DES. SLT
CH. JEP
HXP-3R2 - UNIT 1
LAKE VILLA, IL
GRASS LAKE ROAD
WAU-053.03-02
DOT-689 739R

Grade Crossing Location Record

HXP-3, HXP-3R, HXP-3R2

Cabinet Number (Option 90) 5673

Location GRASS LAKE ROAD Milepost 53.03 DOT 689 739R Date 10 / 06 / 10

Operating Program HPN _____ Version XXXXX

System Monitor Program HPN _____ Version XXXXX

Hardware Settings

Track 1 Master [X] Slave [ ] 4 kHz [ ] 8 kHz [X]

LOS Jumper 0 [X] 1 [ ] 2 [ ] Fault Jumper 0 [X] 1 [ ]

Approach configuration switch position: Normal [X] Short [ ] Very Short [ ]

Track 2 Master [ ] Slave [X] 4 kHz [ ] 8 kHz [X]

LOS Jumper 0 [X] 1 [ ] 2 [ ] Fault Jumper 0 [ ] 1 [ ]

Approach configuration switch position: Normal [X] Short [ ] Very Short [ ]

Adjust Select Adjustments

No.	Adjustment	Default	Range	Track 1	Track 2
1	Approach Length	9,999	0 - 9,999	3680 feet	3680 feet
2	Warning Time	99	23 - 99	36 seconds	36 seconds
3	LIA	0	-9 to +9	2 steps	2 steps
4	TC (1 step = 32)	395	430 - 470	1/418 steps	1/430 steps
5	MD Restart	99%	0 - 99%	0 RX	0 RX

Option Adjustments

No.	Adjustment	Default	Range	Track 1	Track 2
0	RX	0	1-100	199/ 204A	191/ 191A
1	TK-ENA	UP	UP or dn	UP [X] dn [ ]	UP [ ] dn [X]
2	TK FO	0	0 - 9999	210 Hz	210 Hz
3	CW/MD	d	C to d	C [X] d [ ]	C [X] d [ ]
4	UNI-BI	b	U - b	U [ ] b [X]	U [ ] b [X]
5	NBS-C	0	0 - 99	100 RX	97 RX
		9,999	RX dependant	3680 feet	3793 feet
6	CWEWT	80	0 - 99	80 seconds	80 seconds
7	LOS	16	4 - 99	16 seconds	16 seconds
8	IJ-LOS	5	3 - 99	5 seconds	5 seconds
9	BC	frequency dependant	50 -250	129	121
10	P-COMP	0	0 - 10	1 degrees	0 degrees

AX Adjustment Options

NOTE: NO AX DRIVE IS USED AT THIS LOCATION

	Default	Range	Option 11 - AX1	Option 12 - AX2	Option 13 - AX3
TK-ASN		1, 2, Both	1 [ ] 2 [ ] Both [ ]	1 [ ] 2 [ ] Both [ ]	1 [ ] 2 [ ] Both [ ]
OF-TK1	0	0 - 9,999	feet	feet	feet
OF-TK2	0	0 - 9,999	feet	feet	feet
WT	99	23 - 99	seconds	seconds	seconds
MD-RST	99	0 - 99%	RX	RX	RX
CW/MD	d	C or d	C [ ] d [ ]	C [ ] d [ ]	C [ ] d [ ]
CJ-LOS	0	3 - 99	seconds	seconds	seconds
PJ-DET	15	4 - 15	seconds	seconds	seconds
POS-ST	dn	UP or dn	UP [ ] dn [ ]	UP [ ] dn [ ]	UP [ ] dn [ ]

No.	Adjustment	Default	Range	Track 1	Track 2
17	MDR-AX	n*	n or A	n [X] A [ ]	n [X] A [ ]
	OF-TK1	0	0 - 9,999	0 feet	
	OF-TK2	0	0 - 9,999		0 feet
	CJ-LOS	0	3 - 99	0 seconds	0 seconds
	PJ-DET	15	4 - 15	15 seconds	15 seconds
18	MD-TMR	10	10-99 (0=disable)	10 minutes	10 minutes
19	MIN-WT	0	23-99 (0=disable)	0 seconds	0 seconds
20	FS-DET	0	10-30 (0=disable)	0 minutes	0 minutes
21	POS-RX	0	0 - 74 (0=disable)	0 RX	0 RX
	POS-TM	0	0 - 99**	10 minutes	0 minutes
22	AR-TMR	0	0-80 (0=disable)	0 minutes	0 minutes
47	ATO-RX	dn	UP or dn	UP [ ] dn [X]	UP [ ] dn [X]
48	PF-ENA	UP	UP or dn	UP [X] dn [ ]	UP [X] dn [ ]

***n = not an AX drive (no options available)**

****0 = disable, 99 = continuous**

Shunt Record

West Approach		No Shunt RX	No Shunt Phase	100% Shunt RX	100% Shunt Phase	50% Shunt	50% Shunt RX	50% Shunt Phase	LIA Added 1/4 1 to 9
Track 1	Normal								
	Standby								
Track 2	Normal								
	Standby								
East Approach									
Track 1	Normal								
	Standby								
Track 2	Normal								
	Standby								

PROPOSED D	M	Y	REVISIONS	D	C	COMPLETED D	M	Y	C
			IN SERVICE	SLT	JEP	31	12	83	
			ADD SECOND MAIN	NRB	JEP	16	05	03	
			WIDEN XING-NEW GATES	PEA	MKN	22	09	10	DBB

REGION SOUTHERN

SUB. WAUKESHA 435

SIGNALS AND COMMUNICATIONS HOMEWOOD

DES. SLT

28 AUGUST 2000

CH. JEP

HXP-3R2 - UNIT 1
PROGRAM SHEET
LAKE VILLA, IL

GRASS LAKE ROAD

WAU-053.03-03

DOT-689 739R

- NOTES -

UNLESS OTHERWISE NOTED, MINIMUM CASE WIRE SIZE IS #16 AWG.
TWIST ALL WIRE PAIRS MINIMUM TWO TURNS PER FOOT.
CC- HARMON MODEL CROSSING CONTROL UNIT - 2 (CCU-2)
RIM - HARMON RECORDER INTERFACE MODULE
HDL - HD/LINK MODULE

⏚ GROUND BUSS. KEEP LENGTHS AS SHORT AS POSSIBLE.
AVOID SHARP BENDS. #6 AWG MINIMUM TRACK WIRE SIZE.

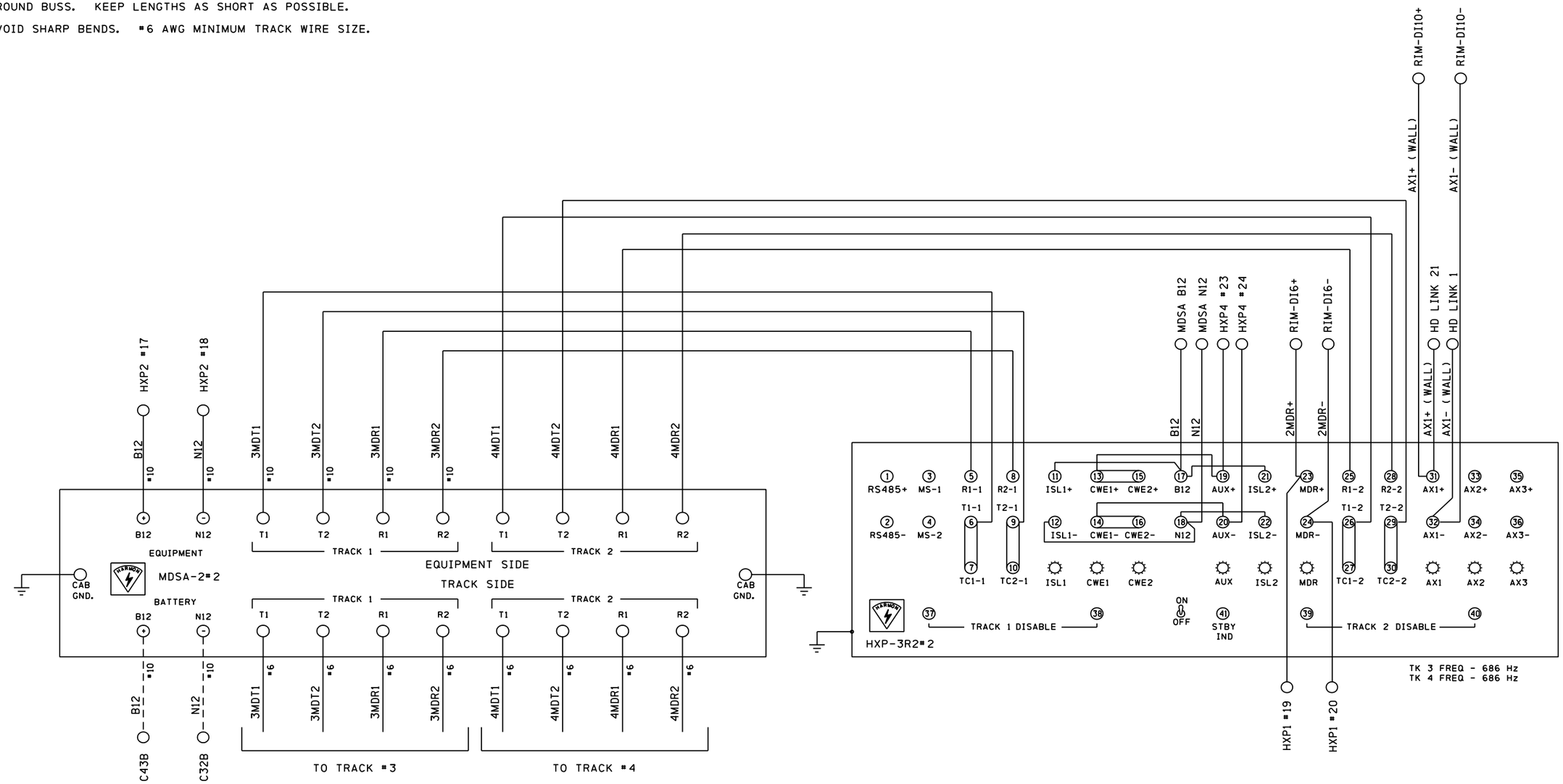

PROPOSED D	PROPOSED M	PROPOSED Y	REVISIONS	D	C	COMPLETED D	COMPLETED M	COMPLETED Y	C
			IN SERVICE	SLT	JEP	31	12	83	
			ADD SECOND MAIN	NRB	JEP	16	05	03	
			WIDEN XING-NEW GATES	PEA	MKN	22	09	10	DBB

REGION SOUTHERN
SUB. WAUKESHA 435

SIGNALS AND COMMUNICATIONS HOMEWOOD
28 AUGUST 2000

DES. SLT
CH. JEP

HXP-3R2 - UNIT 2

LAKE VILLA, IL
GRASS LAKE ROAD

WAU-053.03-04

DOT-689 739R

Grade Crossing Location Record

Cabinet Number (Option 90) 1028

Location GRASS LAKE ROAD Milepost 53.03 DOT 689 739R Date 10 / 06 / 10

Operating Program HPN _____ Version XXXXX

System Monitor Program HPN _____ Version XXXXX

Hardware Settings

Track 1 Master [X] Slave [ ] 4 kHz [ ] 8 kHz [X]

LOS Jumper 0 [X] 1 [ ] 2 [ ] Fault Jumper 0 [X] 1 [ ]

Approach configuration switch position: Normal [X] Short [ ] Very Short [ ]

Track 2 Master [ ] Slave [ ] 4 kHz [ ] 8 kHz [ ]

LOS Jumper 0 [ ] 1 [ ] 2 [ ] Fault Jumper 0 [ ] 1 [ ]

Approach configuration switch position: Normal [ ] Short [ ] Very Short [ ]

Adjust Select Adjustments

No.	Adjustment	Default	Range	Track 1	Track 2
1	Approach Length	9,999	0 - 9,999	1000 feet	1000 feet
2	Warning Time	99	23 - 99	36 30 seconds	36 30 seconds
3	LIA	0	-9 to +9	-4 steps	8 steps
4	TC (1 step = 32)	395	430 - 470	0/400 steps	0/424 steps
5	MD Restart	99%	0 - 99%	RX	RX

Option Adjustments

No.	Adjustment	Default	Range	Track 1	Track 2
0	RX	0	1-100	190/ 189A	179/ 188A
1	TK-ENA	UP	UP or dn	UP [X] dn [ ]	UP [ ] dn [X]
2	TK FO	0	0 - 9999	686 Hz	686 Hz
3	CW/MD	d	C to d	C [X] d [ ]	C [X] d [ ]
4	UNI-BI	b	U - b	U [X] b [ ]	U [X] b [ ]
5	NBS-C	0	0 - 99	78 RX	55 RX
		9,999	RX dependant	3680 feet	1818 feet
6	CWEWT	80	0 - 99	80 seconds	80 seconds
7	LOS	16	4 - 99	5 seconds	5 seconds
8	IJ-LOS	5	3 - 99	5 seconds	5 seconds
9	BC	frequency dependant	50 -250	188	187
10	P-COMP	0	0 - 10	degrees	degrees

HXP-3, HXP-3R, HXP-3R2

AX Adjustment Options

	Default	Range	Option 11 - AX1	Option 12 - AX2	Option 13 - AX3
TK-ASN		1, 2, Both	1 [ ] 2 [ ] Both [X]	1 [ ] 2 [ ] Both [ ]	1 [ ] 2 [ ] Both [ ]
OF-TK1	0	0 - 9,999	2889 feet	feet	feet
OF-TK2	0	0 - 9,999	2889 feet	feet	feet
WT	99	23 - 99	30 seconds	seconds	seconds
MD-RST	99	0 - 99%	0 RX	RX	RX
CW/MD	d	C or d	C [ ] d [ ]	C [ ] d [ ]	C [ ] d [ ]
CJ-LOS	0	3 - 99	0 seconds	seconds	seconds
PJ-DET	15	4 - 15	15 seconds	seconds	seconds
POS-ST	dn	UP or dn	UP [ ] dn [X]	UP [ ] dn [ ]	UP [ ] dn [ ]

No.	Adjustment	Default	Range	Track 1	Track 2
17	MDR-AX	n*	n or A	n [X] A [ ]	n [X] A [ ]
	OF-TK1	0	0 - 9,999	0 feet	
	OF-TK2	0	0 - 9,999		0 feet
	CJ-LOS	0	3 - 99	0 seconds	0 seconds
	PJ-DET	15	4 - 15	15 seconds	15 seconds
18	MD-TMR	10	10-99 (0=disable)	10 minutes	10 minutes
19	MIN-WT	0	23-99 (0=disable)	0 seconds	0 seconds
20	FS-DET	0	10-30 (0=disable)	0 minutes	0 minutes
21	POS-RX	0	0 - 74 (0=disable)	0 RX	0 RX
	POS-TM	0	0 - 99**	10 minutes	0 minutes
22	AR-TMR	0	0-80 (0=disable)	0 minutes	0 minutes
47	ATO-RX	dn	UP or dn	UP [ ] dn [X]	UP [ ] dn [X]
48	PF-ENA	UP	UP or dn	UP [X] dn [ ]	UP [X] dn [ ]

*n = not an AX drive (no options available)

**0 = disable, 99 = continuous

Shunt Record

West Approach		No Shunt RX	No Shunt Phase	100% Shunt RX	100% Shunt Phase	50% Shunt	50% Shunt RX	50% Shunt Phase	LIA Added 1/4 1 to 9
Track 1	Normal								
	Standby								
Track 2	Normal								
	Standby								
East Approach									
Track 1	Normal								
	Standby								
Track 2	Normal								
	Standby								

PROPOSED
DESIGN NO. 11-0491
RED-IN YELLOW-OUT

AS INSTALLED
DATE _____
BY _____
(PRINT NAME)

PROPOSED D	M	Y	REVISIONS	D	C	COMPLETED D	M	Y	C
			IN SERVICE	SLT	JEP	31	12	83	
			ADD SECOND MAIN	NRB	JEP	16	05	03	
			WIDEN XING-NEW GATES	PEA	MKN	22	09	10	DBB

REGION SOUTHERN

SUB. WAUKESHA 435

SIGNALS AND COMMUNICATIONS HOMEWOOD

DES. SLT

28 AUGUST 2000

CH. JEP

HXP-3R2 - UNIT 2
PROGRAM SHEET
LAKE VILLA, IL

GRASS LAKE ROAD

WAU-053.03-05

DOT-689 739R

- NOTES -

UNLESS OTHERWISE NOTED, MINIMUM CASE WIRE SIZE IS #16 AWG.
TWIST ALL WIRE PAIRS MINIMUM TWO TURNS PER FOOT.
CC- HARMON MODEL CROSSING CONTROL UNIT - 2 (CCU-2)
RIM - HARMON RECORDER INTERFACE MODULE
HDL - HD/LINK MODULE
⏚ GROUND BUSS. KEEP LENGTHS AS SHORT AS POSSIBLE.
AVOID SHARP BENDS. #6 AWG MINIMUM TRACK WIRE SIZE.

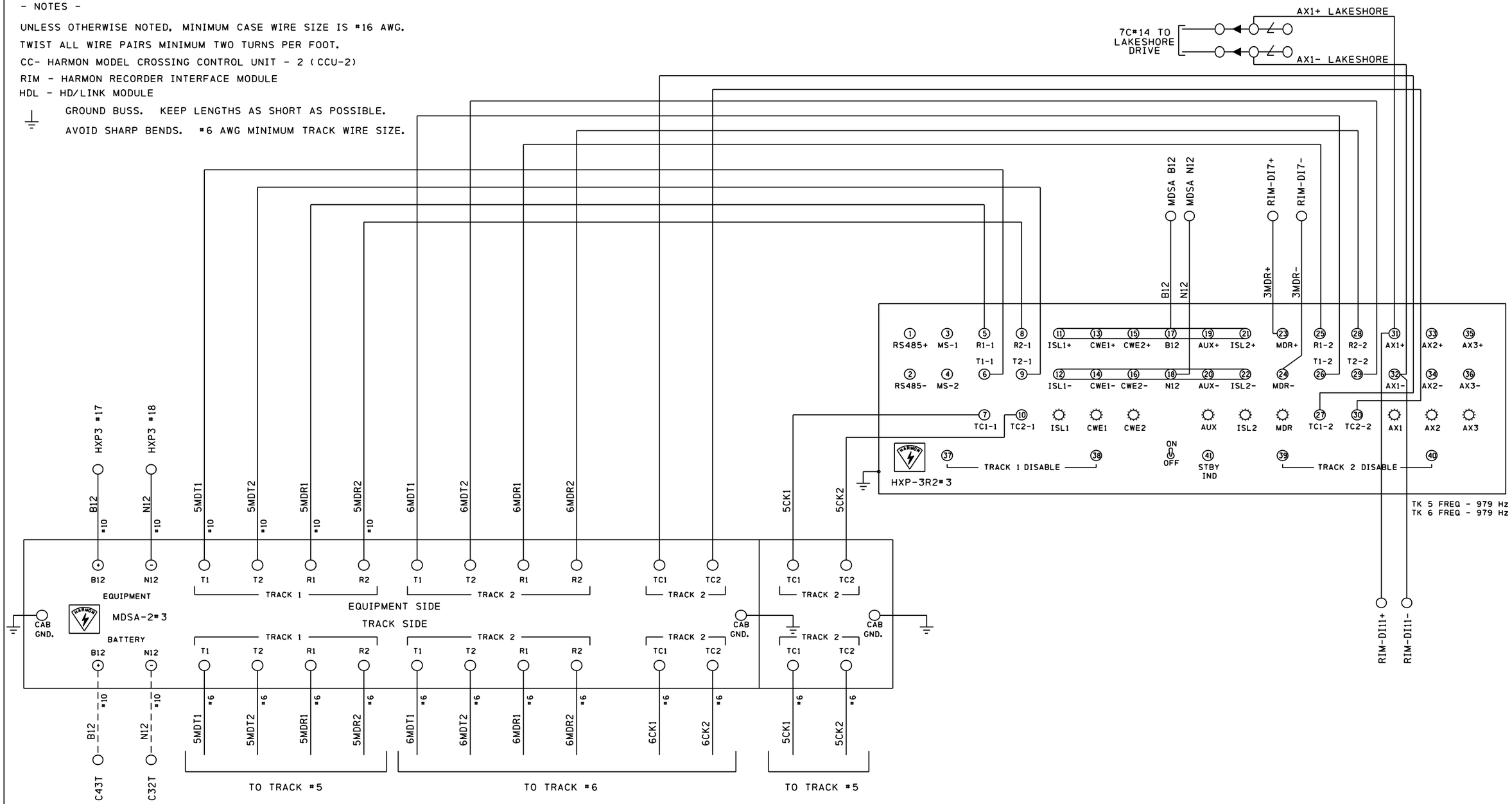

PROPOSED D	M	Y	REVISIONS	D	C	COMPLETED D	M	Y	C
			IN SERVICE	SLT	JEP	31	12	83	
			ADD SECOND MAIN	NRB	JEP	16	05	03	
			WIDEN XING-NEW GATES	PEA	MKN	22	09	10	DBB

REGION SOUTHERN
SUB. WAUKESHA 435
SIGNALS AND COMMUNICATIONS HOMEWOOD
DES. SLT
28 AUGUST 2000
CH. JEP
HXP-3R2 - UNIT 3
LAKE VILLA, IL
GRASS LAKE ROAD
WAU-053.03-06
DOT-689 739R

Grade Crossing Location Record

Cabinet Number (Option 90) 5677

Location GRASS LAKE ROAD Milepost 53.03 DOT 689 739R Date 10 / 06 / 10

Operating Program HPN _____ Version XXXXX

System Monitor Program HPN _____ Version XXXXX

Hardware Settings

Track 1 Master [X] Slave [ ] 4 kHz [ ] 8 kHz [X]

LOS Jumper 0 [X] 1 [ ] 2 [ ] Fault Jumper 0 [X] 1 [ ]

Approach configuration switch position: Normal [X] Short [ ] Very Short [ ]

Track 2 Master [ ] Slave [ ] 4 kHz [ ] 8 kHz [ ]

LOS Jumper 0 [ ] 1 [ ] 2 [ ] Fault Jumper 0 [ ] 1 [ ]

Approach configuration switch position: Normal [ ] Short [ ] Very Short [ ]

Adjust Select Adjustments

No.	Adjustment	Default	Range	Track 1	Track 2
1	Approach Length	9,999	0 - 9,999	1000 feet	1000 feet
2	Warning Time	99	23 - 99	30 seconds	30 seconds
3	LIA	0	-9 to +9	-4 steps	-4 steps
4	TC (1 step = 32)	395	430 - 470	0/437 steps	0/373 steps
5	MD Restart	99%	0 - 99%	RX	RX

Option Adjustments

No.	Adjustment	Default	Range	Track 1	Track 2
0	RX	0	1-100	167/ 168A	171/ 175A
1	TK-ENA	UP	UP or dn	UP [X] dn [ ]	UP [ ] dn [X]
2	TK FO	0	0 - 9999	979 Hz	979 Hz
3	CW/MD	d	C to d	C [X] d [ ]	C [X] d [ ]
4	UNI-BI	b	U - b	U [X] b [ ]	U [X] b [ ]
5	NBS-C	0	0 - 99	100 RX	100 RX
		9,999	RX dependant	1000 feet	1000 feet
6	CWEWT	80	0 - 99	80 seconds	80 seconds
7	LOS	16	4 - 99	16 seconds	16 seconds
8	IJ-LOS	5	3 - 99	5 seconds	5 seconds
9	BC	frequency dependant	50 -250	150	150
10	P-COMP	0	0 - 10	0 degrees	0 degrees

HXP-3, HXP-3R, HXP-3R2

AX Adjustment Options

	Default	Range	Option 11 - AX1	Option 12 - AX2	Option 13 - AX3
TK-ASN		1, 2, Both	1 [ ] 2 [ ] Both [X]	1 [ ] 2 [ ] Both [ ]	1 [ ] 2 [ ] Both [ ]
OF-TK1	0	0 - 9,999	2465 feet	feet	feet
OF-TK2	0	0 - 9,999	2465 feet	feet	feet
WT	99	23 - 99	30 seconds	seconds	seconds
MD-RST	99	0 - 99%	0 RX	RX	RX
CW/MD	d	C or d	C [X] d [ ]	C [ ] d [ ]	C [ ] d [ ]
CJ-LOS	0	3 - 99	0 seconds	seconds	seconds
PJ-DET	15	4 - 15	15 seconds	seconds	seconds
POS-ST	dn	UP or dn	UP [ ] dn [X]	UP [ ] dn [ ]	UP [ ] dn [ ]

No.	Adjustment	Default	Range	Track 1	Track 2
17	MDR-AX	n*	n or A	n [X] A [ ]	n [X] A [ ]
	OF-TK1	0	0 - 9,999	0 feet	
	OF-TK2	0	0 - 9,999		0 feet
	CJ-LOS	0	3 - 99	0 seconds	0 seconds
	PJ-DET	15	4 - 15	15 seconds	15 seconds
18	MD-TMR	10	10-99 (0=disable)	10 minutes	10 minutes
19	MIN-WT	0	23-99 (0=disable)	0 seconds	0 seconds
20	FS-DET	0	10-30 (0=disable)	0 minutes	0 minutes
21	POS-RX	0	0 - 74 (0=disable)	0 RX	0 RX
	POS-TM	0	0 - 99**	99 minutes	0 minutes
22	AR-TMR	0	0-80 (0=disable)	0 minutes	0 minutes
47	ATO-RX	dn	UP or dn	UP [ ] dn [X]	UP [ ] dn [X]
48	PF-ENA	UP	UP or dn	UP [X] dn [ ]	UP [X] dn [ ]

***n = not an AX drive (no options available)**

****0 = disable, 99 = continuous**

Shunt Record

West Approach		No Shunt RX	No Shunt Phase	100% Shunt RX	100% Shunt Phase	50% Shunt	50% Shunt RX	50% Shunt Phase	LIA Added 1/M 1 to 9
Track 1	Normal								
	Standby								
Track 2	Normal								
	Standby								
East Approach									
Track 1	Normal								
	Standby								
Track 2	Normal								
	Standby								

PROPOSED D	M	Y	REVISIONS	D	C	COMPLETED D	M	Y	C
			IN SERVICE	SLT	JEP	31	12	83	
			ADD SECOND MAIN	NRB	JEP	16	05	03	
			WIDEN XING-NEW GATES	PEA	MKN	22	09	10	DBB

REGION SOUTHERN

SUB. WAUKESHA 435

SIGNALS AND COMMUNICATIONS HOMEWOOD

DES. SLT

28 AUGUST 2000

CH. JEP

HXP-3R2 - UNIT 3
PROGRAM SHEET
LAKE VILLA, IL

GRASS LAKE ROAD

WAU-053.03-07

DOT-689 739R

- NOTES -

UNLESS OTHERWISE NOTED, MINIMUM CASE WIRE SIZE IS #16 AWG.

TWIST ALL WIRE PAIRS MINIMUM TWO TURNS PER FOOT.

CC- HARMON MODEL CROSSING CONTROL UNIT - 2 (CCU-2)

RIM - HARMON RECORDER INTERFACE MODULE

HDL - HD/LINK MODULE

⏚ GROUND BUSS. KEEP LENGTHS AS SHORT AS POSSIBLE.

AVOID SHARP BENDS. #6 AWG MINIMUM TRACK WIRE SIZE.

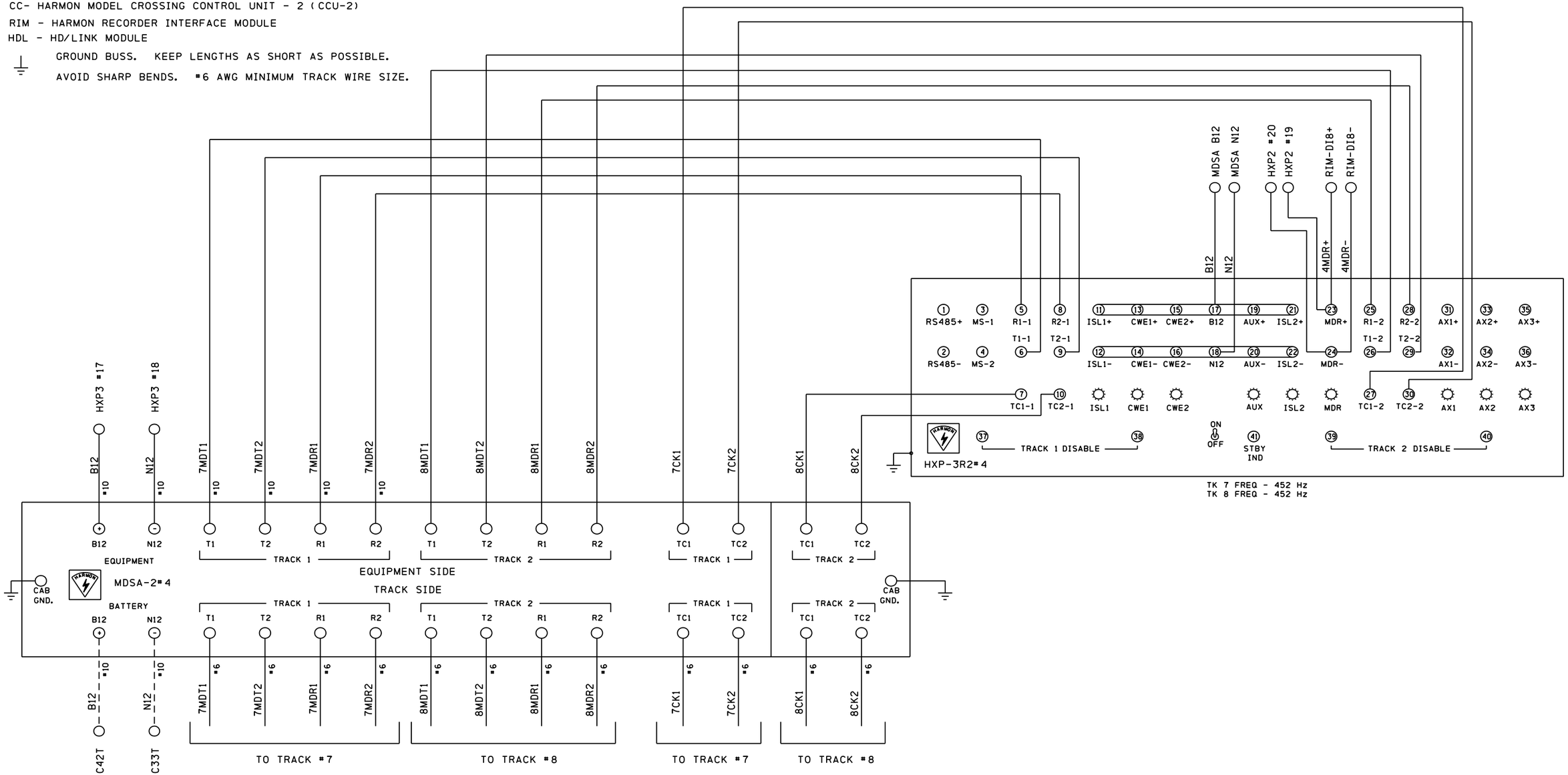

PROPOSED D	PROPOSED M	PROPOSED Y	REVISIONS	D	C	COMPLETED D	COMPLETED M	COMPLETED Y	C
			IN SERVICE	SLT	JEP	31	12	83	
			ADD SECOND MAIN	NRB	JEP	16	05	03	
			WIDEN XING-NEW GATES	PEA	MKN	22	09	10	DBB

REGION SOUTHERN

SUB. WAUKESHA 435

SIGNALS AND COMMUNICATIONS HOMEWOOD

DES. SLT

28 AUGUST 2000

CH. JEP

HXP-3R2 - UNIT 4

LAKE VILLA, IL

GRASS LAKE ROAD

WAU-053.03-08

DOT-689 739R

Grade Crossing Location Record

Cabinet Number (Option 90) 5666

Location GRASS LAKE ROAD Milepost 53.03 DOT 689 739R Date 10 / 06 / 10

Operating Program HPN _____ Version XXXXX

System Monitor Program HPN _____ Version XXXXX

Hardware Settings

Track 1 Master [X] Slave [ ] 4 kHz [ ] 8 kHz [X]

LOS Jumper 0 [X] 1 [ ] 2 [ ] Fault Jumper 0 [X] 1 [ ]

Approach configuration switch position: Normal [X] Short [ ] Very Short [ ]

Track 2 Master [ ] Slave [ ] 4 kHz [ ] 8 kHz [ ]

LOS Jumper 0 [ ] 1 [ ] 2 [ ] Fault Jumper 0 [ ] 1 [ ]

Approach configuration switch position: Normal [ ] Short [ ] Very Short [ ]

Adjust Select Adjustments

No.	Adjustment	Default	Range	Track 1	Track 2
1	Approach Length	9,999	0 - 9,999	2680 feet	2680 feet
2	Warning Time	99	23 - 99	36 30 seconds	36 30 seconds
3	LIA	0	-9 to +9	6 steps	5 steps
4	TC (1 step = 32)	395	430 - 470	0/429 steps	0/433 steps
5	MD Restart	99%	0 - 99%	RX	RX

Option Adjustments

No.	Adjustment	Default	Range	Track 1	Track 2
0	RX	0	1-100	329/ 335A	323/ 324A
1	TK-ENA	UP	UP or dn	UP [X] dn [ ]	UP [ ] dn [X]
2	TK FO	0	0 - 9999	452 Hz	452 Hz
3	CW/MD	d	C to d	C [X] d [ ]	C [X] d [ ]
4	UNI-BI	b	U - b	U [ ] b [X]	U [ ] b [X]
5	NBS-C	0	0 - 99	99 RX	99 RX
		9,999	RX dependant	2707 feet	2707 feet
6	CWEWT	80	0 - 99	80 seconds	80 seconds
7	LOS	16	4 - 99	5 seconds	16 seconds
8	IJ-LOS	5	3 - 99	5 seconds	5 seconds
9	BC	frequency dependant	50 -250	147	145
10	P-COMP	0	0 - 10	0 degrees	0 degrees

HXP-3, HXP-3R, HXP-3R2

AX Adjustment Options NOTE: NO AX DRIVE IS USED AT THIS LOCATION

	Default	Range	Option 11 - AX1	Option 12 - AX2	Option 13 - AX3
TK-ASN		1, 2, Both	1 [ ] 2 [ ] Both [ ]	1 [ ] 2 [ ] Both [ ]	1 [ ] 2 [ ] Both [ ]
OF-TK1	0	0 - 9,999	feet	feet	feet
OF-TK2	0	0 - 9,999	feet	feet	feet
WT	99	23 - 99	seconds	seconds	seconds
MD-RST	99	0 - 99%	RX	RX	RX
CW/MD	d	C or d	C [ ] d [ ]	C [ ] d [ ]	C [ ] d [ ]
CJ-LOS	0	3 - 99	seconds	seconds	seconds
PJ-DET	15	4 - 15	seconds	seconds	seconds
POS-ST	dn	UP or dn	UP [ ] dn [ ]	UP [ ] dn [ ]	UP [ ] dn [ ]

No.	Adjustment	Default	Range	Track 1	Track 2
17	MDR-AX	n*	n or A	n [X] A [ ]	n [X] A [ ]
	OF-TK1	0	0 - 9,999	1000 feet	
	OF-TK2	0	0 - 9,999		1000 feet
	CJ-LOS	0	3 - 99	0 seconds	0 seconds
	PJ-DET	15	4 - 15	15 seconds	15 seconds
18	MD-TMR	10	10-99 (0=disable)	10 minutes	10 minutes
19	MIN-WT	0	23-99 (0=disable)	0 seconds	0 seconds
20	FS-DET	0	10-30 (0=disable)	0 minutes	0 minutes
21	POS-RX	0	0 - 74 (0=disable)	0 RX	0 RX
	POS-TM	0	0 - 99**	99 minutes	0 minutes
22	AR-TMR	0	0-80 (0=disable)	0 minutes	0 minutes
47	ATO-RX	dn	UP or dn	UP [ ] dn [X]	UP [ ] dn [X]
48	PF-ENA	UP	UP or dn	UP [X] dn [ ]	UP [X] dn [ ]

***n = not an AX drive (no options available)**
****0 = disable, 99 = continuous**

Shunt Record

West Approach		No Shunt RX	No Shunt Phase	100% Shunt RX	100% Shunt Phase	50% Shunt	50% Shunt RX	50% Shunt Phase	LIA Added 1 to 9
Track 1	Normal								
	Standby								
Track 2	Normal								
	Standby								
East Approach									
Track 1	Normal								
	Standby								
Track 2	Normal								
	Standby								

PROPOSED
DESIGN NO. 11-0491
RED-IN YELLOW-OUT

AS INSTALLED
DATE _____
BY _____
(PRINT NAME)

PROPOSED D	PROPOSED M	PROPOSED Y	REVISIONS	D	C	COMPLETED D	COMPLETED M	COMPLETED Y	C
			IN SERVICE	SLT	JEP	31	12	83	
			ADD SECOND MAIN	NRB	JEP	16	05	03	
			WIDEN XING-NEW GATES	PEA	MKN	22	09	10	DBB

REGION SOUTHERN
SUB. WAUKESHA 435
CN

SIGNALS AND COMMUNICATIONS HOMEWOOD
DES. SLT
28 AUGUST 2000
CH. JEP

HXP-3R2 - UNIT 4
PROGRAM SHEET
LAKE VILLA, IL

GRASS LAKE ROAD

WAU-053.03-09

DOT-689 739R

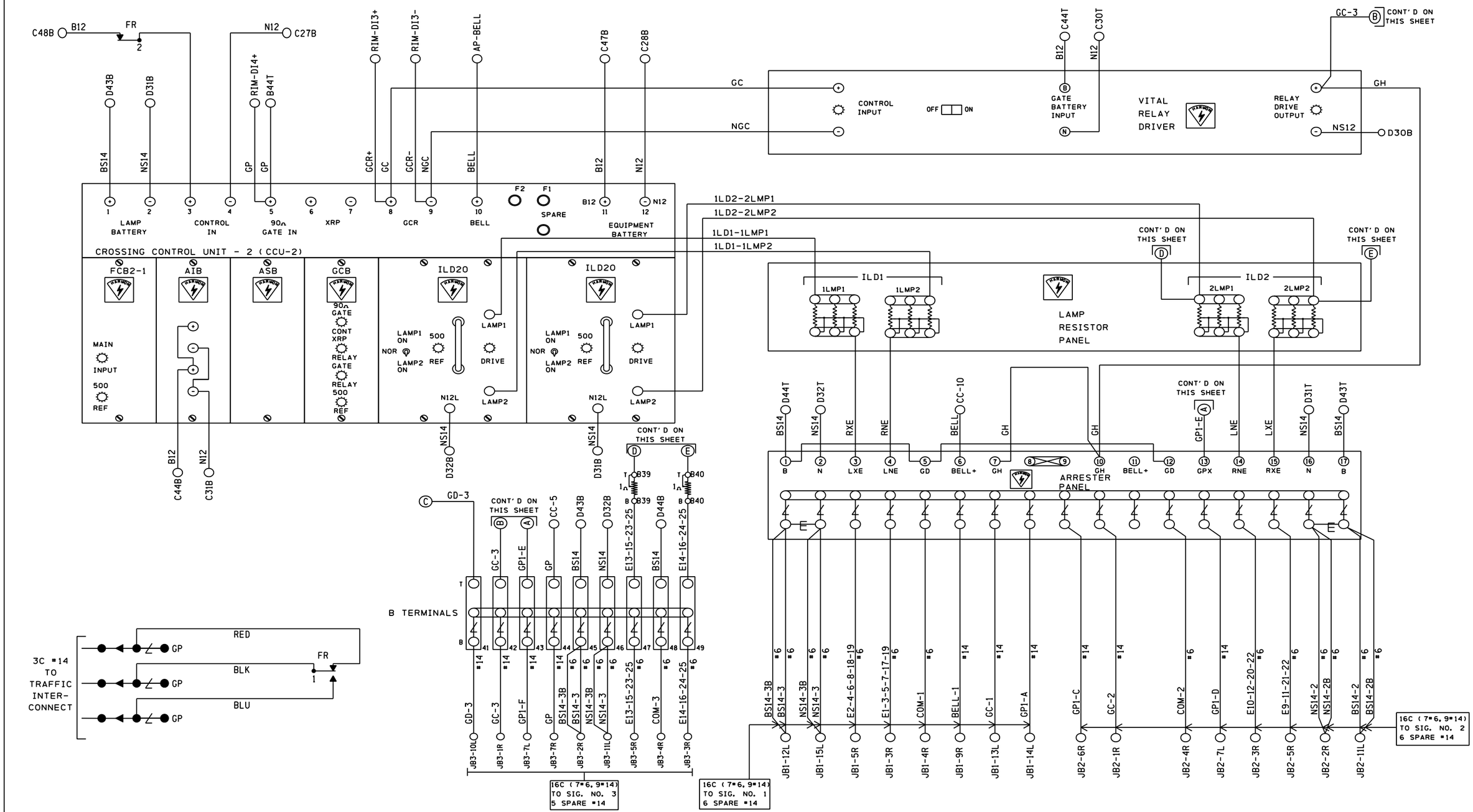

- NOTES -

UNLESS OTHERWISE NOTED, MINIMUM WIRE SIZE IS #10 AWG.

HXP - HARMON MODEL HXP-3R GRADE CROSSING PREDICTOR UNIT

MDSA - HARMON MODEL MDSA-2 MOTION DETECTOR SURGE ARRESTER PANEL

AP - HARMON ARRESTER PANEL

RIM - HARMON RECORDER INTERFACE MODULE

∠ - LIGHTNING ARRESTER

E - EQUALIZER

PROPOSED D	PROPOSED M	PROPOSED Y	REVISIONS	D	C	COMPLETED D	COMPLETED M	COMPLETED Y	C
			IN SERVICE	SLT	JEP	31	12	83	
			ADD SECOND MAIN	NRB	JEP	16	05	03	
			WIDEN XING-NEW GATES	PEA	MKN	22	09	10	DBB
08	08	11	UPGR TRAFFIC SIG INT'R	AVS	JEP	09	12	11	JRF
19	09	11	BATTERY CHANGE ON VRD	AVS	JEP	31	10	11	GJS

REGION SOUTHERN

SUB. WAUKESHA 435

SIGNALS AND COMMUNICATIONS HOMEWOOD

DES. SLT

28 AUGUST 2000

CH. JEP

CROSSING CONTROLLER
TRAFFIC INTERCONNECT
LAKE VILLA, IL

GRASS LAKE ROAD

WAU-053.03-10

DOT-689 739R

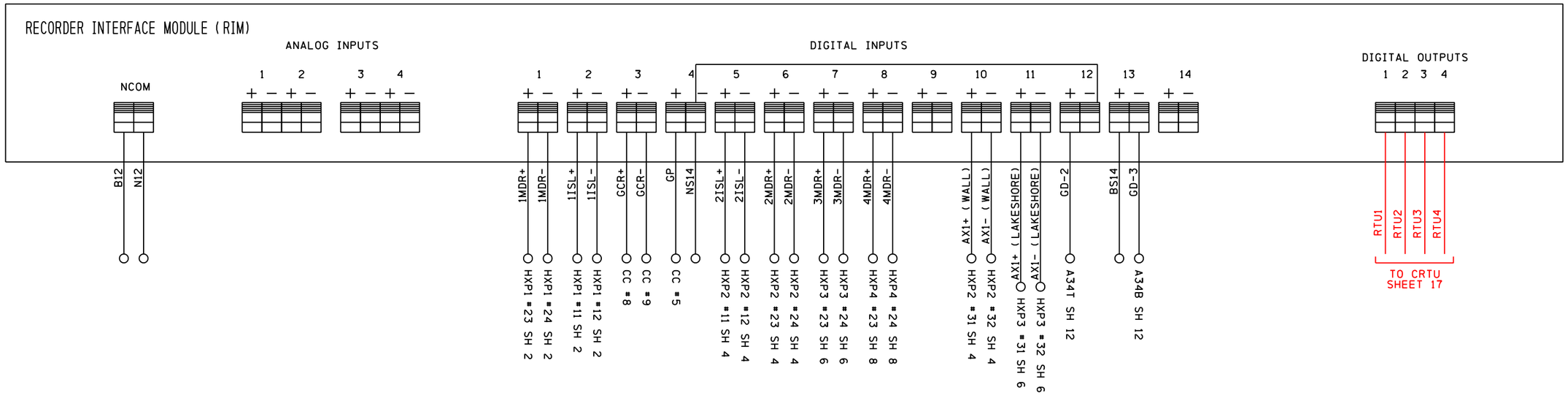

PROPOSED
DESIGN NO. 11-0491
RED-IN YELLOW-OUT

AS INSTALLED
DATE _____
BY _____
(PRINT NAME)

PROPOSED D	PROPOSED M	PROPOSED Y	REVISIONS	D	C	COMPLETED D	COMPLETED M	COMPLETED Y	C
			IN SERVICE	SLT	JEP	31	12	83	
			ADD SECOND MAIN	NRB	JEP	16	05	03	
			WIDEN XING-NEW GATES	PEA	MKN	22	09	10	DBB
23	08	11	ADD CRTU	AVS	JEP				

REGION SOUTHERN
SUB. WAUKESHA 435

SIGNALS AND COMMUNICATIONS HOMEWOOD
DES. SLT
28 AUGUST 2000
CH. JEP
RECORDER INTERFACE MODULE
LAKE VILLA, IL
GRASS LAKE ROAD
WAU-053.03-11
DOT-689 739R

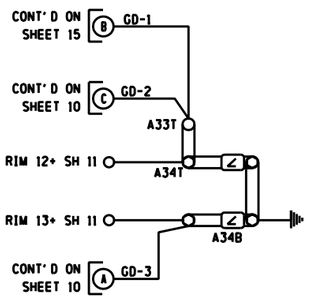

PROPOSED D	PROPOSED M	PROPOSED Y	REVISIONS	D	C	COMPLETED D	COMPLETED M	COMPLETED Y	C
			IN SERVICE	SLT	JEP	31	12	83	
			ADD SECOND MAIN	NRB	JEP	16	05	03	
			WIDEN XING-NEW GATES	PEA	MKN	22	09	10	DBB

REGION SOUTHERN

SUB. WAUKESHA 435

SIGNALS AND COMMUNICATIONS
HOMEWOOD

DES. SLT

28 AUGUST 2000

CH. JEP

LINE CIRCUITS

LAKE VILLA, IL

GRASS LAKE ROAD

WAU-053.03-12

DOT-689 739R

HD MODULE

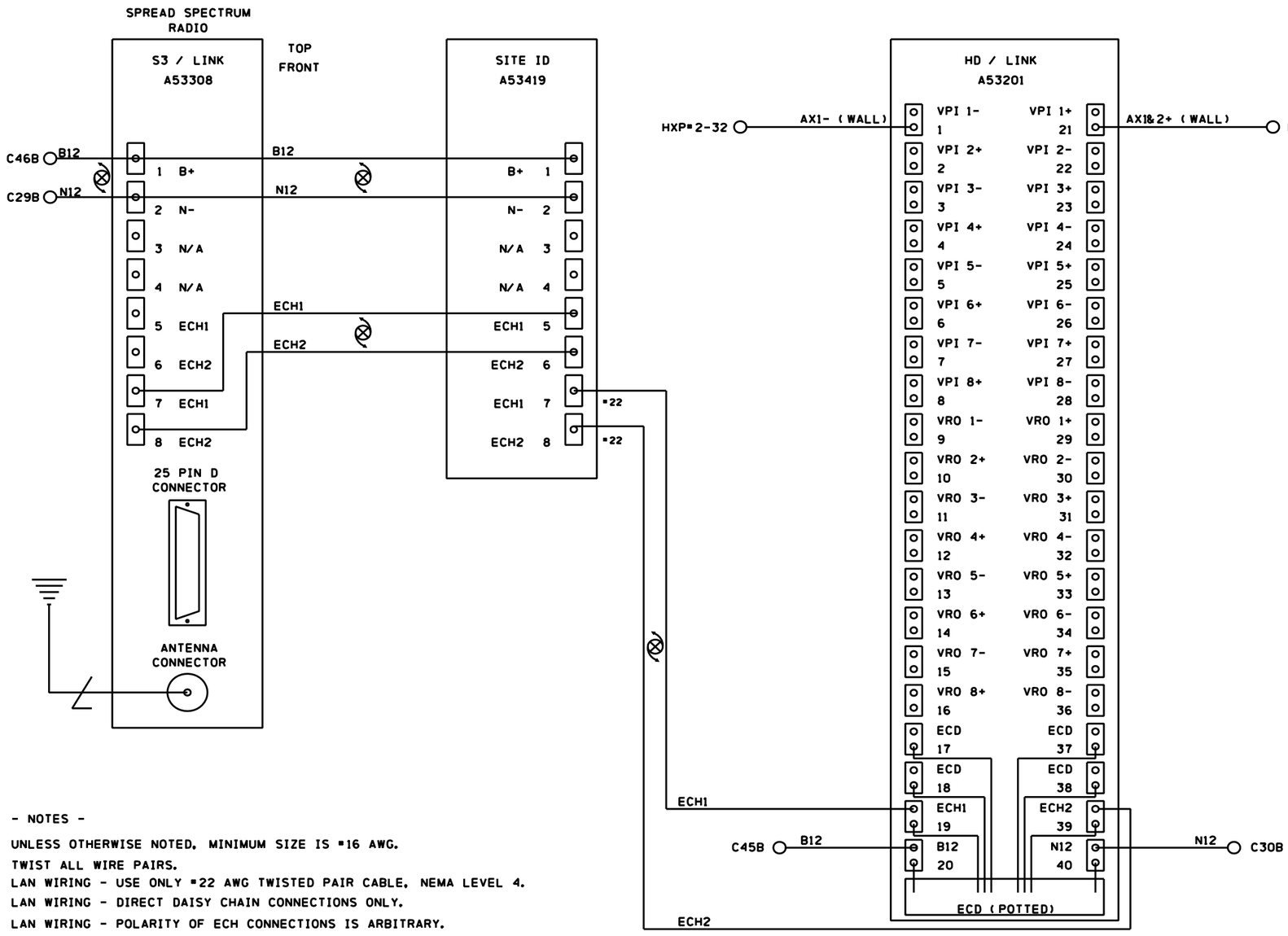

HD / LINK CONNECTIVITY

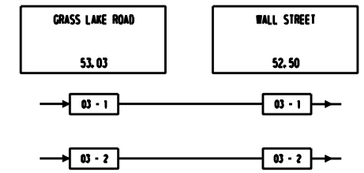

S3 / LINK MODULE SETUP

FUNCTION	S REG.	VALUE
ATCS RRR ID MSB	20	00 •
ATCS RRR ID LSB	21	00 •
ATCS LLL LINE ID MSB	22	00 •
ATCS LLL LINE ID LSB	23	00 •
ATCS GGG GROUP ID	24	00 •
ATCS GGG GROUP ID	25	00 •
LEFT TRANSMIT POWER	56	255
LEFT TRANSMIT FREQ.	61	XX •
LEFT RECEIVE FREQ.	62	XX •
RIGHT TRANSMIT FREQ.	81	XX •
RIGHT RECEIVE FREQ.		XX •

- LEAVE 00 FOR RADIO TO GET ADDRESS FROM HD MODULE
- ASSIGN UPON INSTALLATION

HD / LINK MODULE CONFIGURATION

SITE NUMBER	
MODULE EXEC. FILE	
MODULE CONFIG. FILE	
UNC	

- NOTES -

UNLESS OTHERWISE NOTED, MINIMUM SIZE IS #16 AWG.
TWIST ALL WIRE PAIRS.
LAN WIRING - USE ONLY #22 AWG TWISTED PAIR CABLE, NEMA LEVEL 4.
LAN WIRING - DIRECT DAISY CHAIN CONNECTIONS ONLY.
LAN WIRING - POLARITY OF ECH CONNECTIONS IS ARBITRARY.
LAN WIRING - ENDPOINTS MUST TERMINATE WITH A80078 TERMINATIONS OR EQUIVALENT.

PROPOSED D	PROPOSED M	PROPOSED Y	REVISIONS	D	C	COMPLETED D	COMPLETED M	COMPLETED Y	C
			IN SERVICE	SLT	JEP	31	12	83	
			ADD SECOND MAIN	NRB	JEP	16	05	03	
			WIDEN XING-NEW GATES	PEA	MKN	22	09	10	DBB

REGION SOUTHERN
SUB. WAUKESHA 435
CN
SIGNALS AND COMMUNICATIONS HOMEWOOD
DES. SLT
28 AUGUST 2000
CH. JEP
HD LINK CONNECTTIVITY
LAKE VILLA, IL
GRASS LAKE ROAD
WAU-053.03-13

DOT-689 739R

TERMINAL BOARD LAYOUT

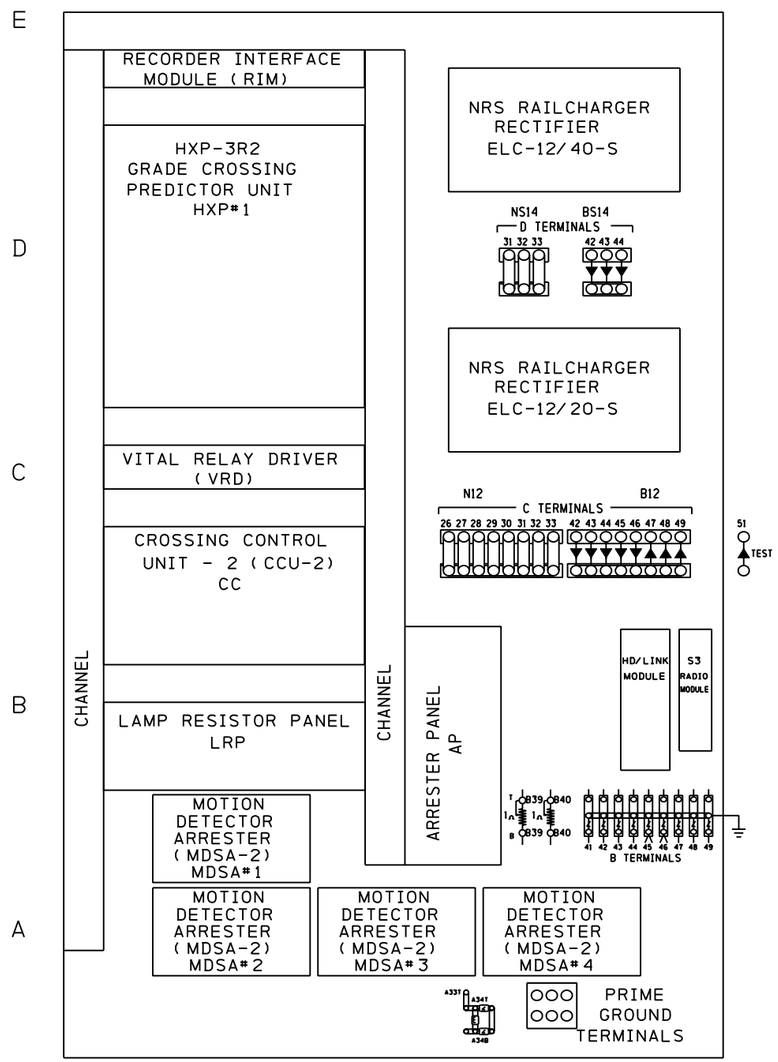

- NOTES -

TEST TERMINAL.

NOTE: HXP2, HXP3, HXP4 LOCATED ON SIDE A

- NOTES -

USE #6 AWG BARE COPPER SOLID WIRE BELOW GROUND.
USE #6 AWG INSULATED SOFT COPPER SOLID WIRE ABOVE GROUND.
BOND PRIME GROUND TERMINAL BLOCK TO BUNGALOW EXTERIOR.
AC POWER CABLE IS NOT TO ENTER BUNGALOW THROUGH CABLE CHUTE.

GROUNDING DIAGRAM

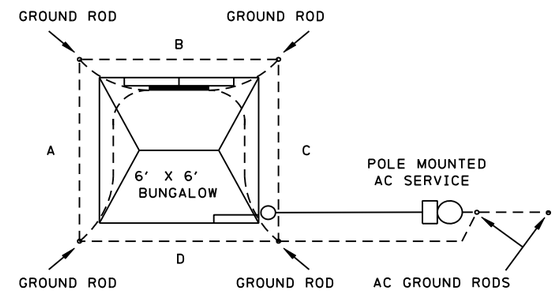

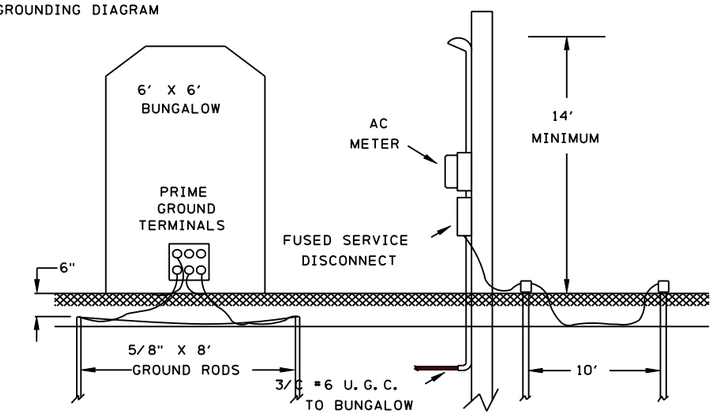

AC WIRING DIAGRAM

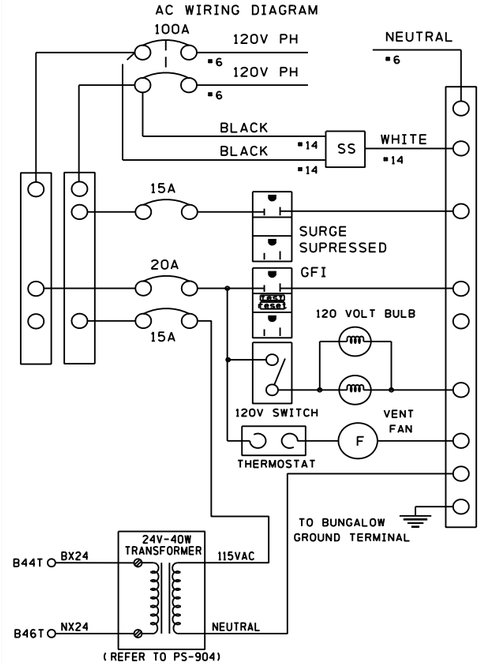

24 VOLT - 40 WATT TRANSFORMER (CN STOCK #02-45-367)

- NOTES -

SS - LIGHTNING PROTECTION. GE 9L15 CCB #007. MOUNT ON SIDE OF LOAD CENTER. CONNECT TO 100 AMP LUGS.

LINK SUBCIRCUIT GROUND LUG TO LOAD CENTER NEUTRAL BUSS.

BOND LOAD CENTER TO METAL FRAME OF BUNGALOW.

B12/N12 CIRCUITRY DIAGRAM

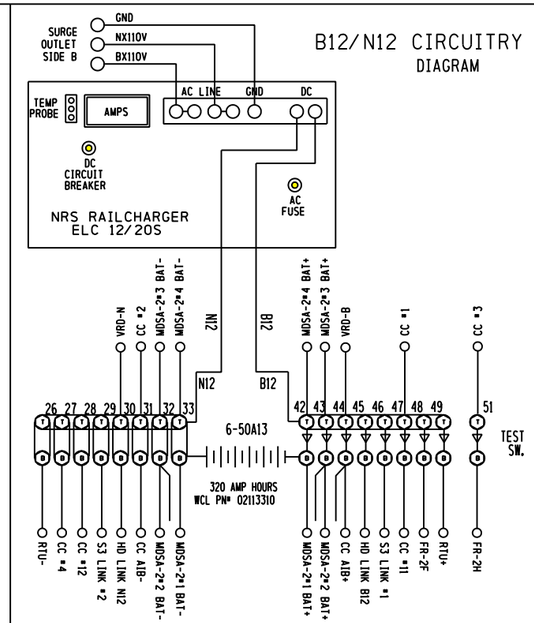

BS14/NS14 CIRCUITRY DIAGRAM

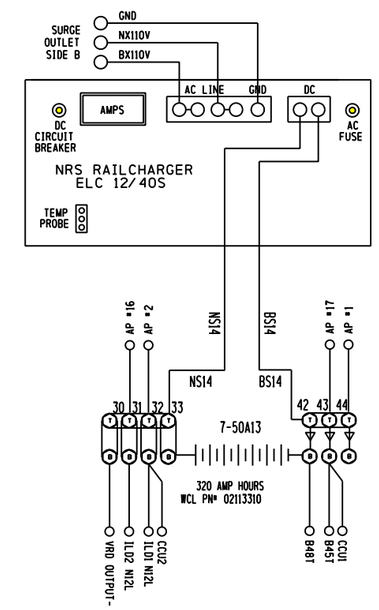

SHOW LOCATION OF cRTU WHEN INSTALLED

PROPOSED D	PROPOSED M	PROPOSED Y	REVISIONS	D	C	COMPLETED D	COMPLETED M	COMPLETED Y	C
			IN SERVICE	SLT	JEP	31	12	83	
			ADD SECOND MAIN	NRB	JEP	16	05	03	
			WIDEN XING-NEW GATES	PEA	MKN	22	09	10	DBB
08	08	11	UPGR TRAFFIC SIG INT'R	AVS	JEP	12	09	11	JRF
19	09	11	BATTERY CHANGE ON VRD	AVS	JEP	31	10	11	GJS

REGION SOUTHERN
SUB. WAUKESHA 435

SIGNALS AND COMMUNICATIONS HOMEWOOD
28 AUGUST 2000
DES. SLT
CH. JEP

BUNGALOW LAYOUT

LAKE VILLA, IL
GRASS LAKE ROAD

WAU-053.03-14

DOT-689 739R

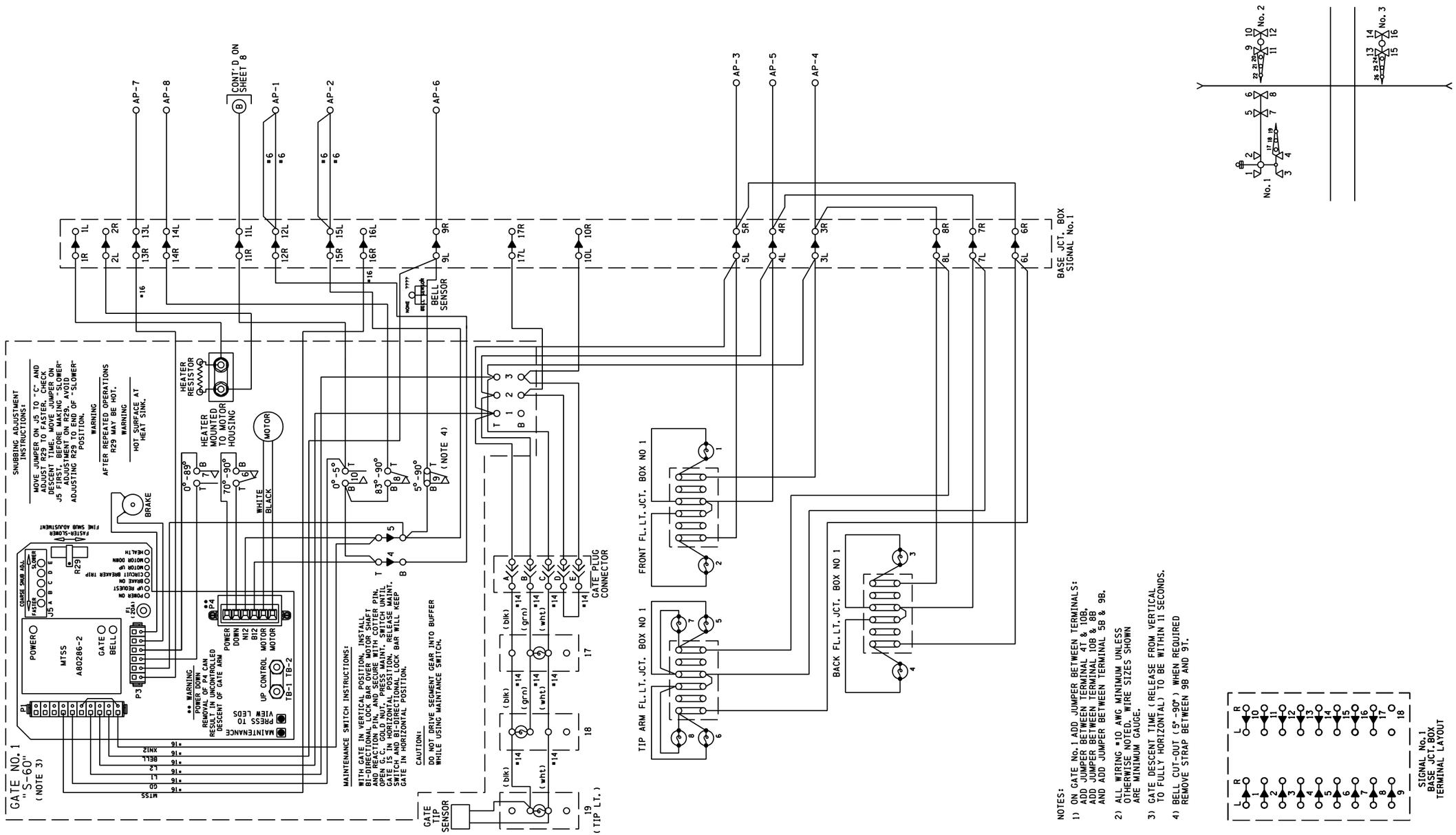

6' X 6' BUNGALOW

PROPOSED D	PROPOSED M	PROPOSED Y	REVISIONS	D	C	COMPLETED D	COMPLETED M	COMPLETED Y	C
			AS INSTALLED			22	09	10	DBB

REGION SOUTHERN

SUB. WAUKESHA 435

CN

SIGNALS AND COMMUNICATIONS
HOMEWOOD

DES. APL

26 OCTOBER 2009

CH. MKN

GATE MECHANISM CONTROL CIRCUITS
US&S MODEL 95
LAKE VILLA, IL

GRASS LAKE ROAD

WAU-053.03-15

DOT-689 739R

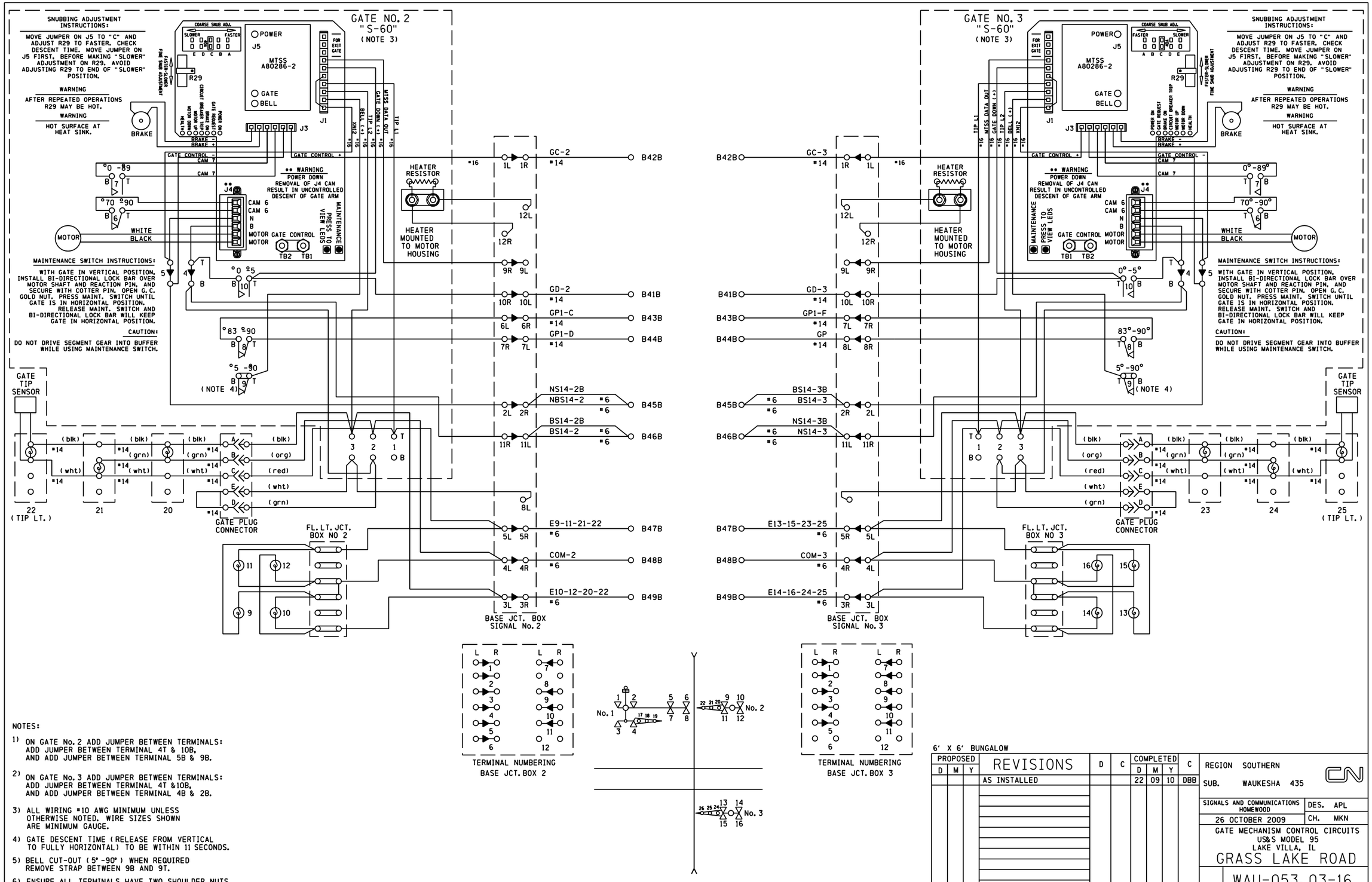

NOTES:

1) ON GATE No. 2 ADD JUMPER BETWEEN TERMINALS: ADD JUMPER BETWEEN TERMINAL 4T & 10B, AND ADD JUMPER BETWEEN TERMINAL 5B & 9B.

2) ON GATE No. 3 ADD JUMPER BETWEEN TERMINALS: ADD JUMPER BETWEEN TERMINAL 4T &10B, AND ADD JUMPER BETWEEN TERMINAL 4B & 2B.

3) ALL WIRING #10 AWG MINIMUM UNLESS OTHERWISE NOTED. WIRE SIZES SHOWN ARE MINIMUM GAUGE.

4) GATE DESCENT TIME (RELEASE FROM VERTICAL TO FULLY HORIZONTAL) TO BE WITHIN 11 SECONDS.

5) BELL CUT-OUT (5°-90°) WHEN REQUIRED REMOVE STRAP BETWEEN 9B AND 9T.

6) ENSURE ALL TERMINALS HAVE TWO SHOULDER NUTS.

6' X 6' BUNGALOW

PROPOSED D	PROPOSED M	PROPOSED Y	REVISIONS	D	C	COMPLETED D	COMPLETED M	COMPLETED Y	C
			AS INSTALLED			22	09	10	DBB

REGION SOUTHERN

SUB. WAUKESHA 435

SIGNALS AND COMMUNICATIONS HOMEWOOD

26 OCTOBER 2009

DES. APL

CH. MKN

GATE MECHANISM CONTROL CIRCUITS
US&S MODEL 95
LAKE VILLA, IL

GRASS LAKE ROAD

WAU-053.03-16

DOT-689 739R

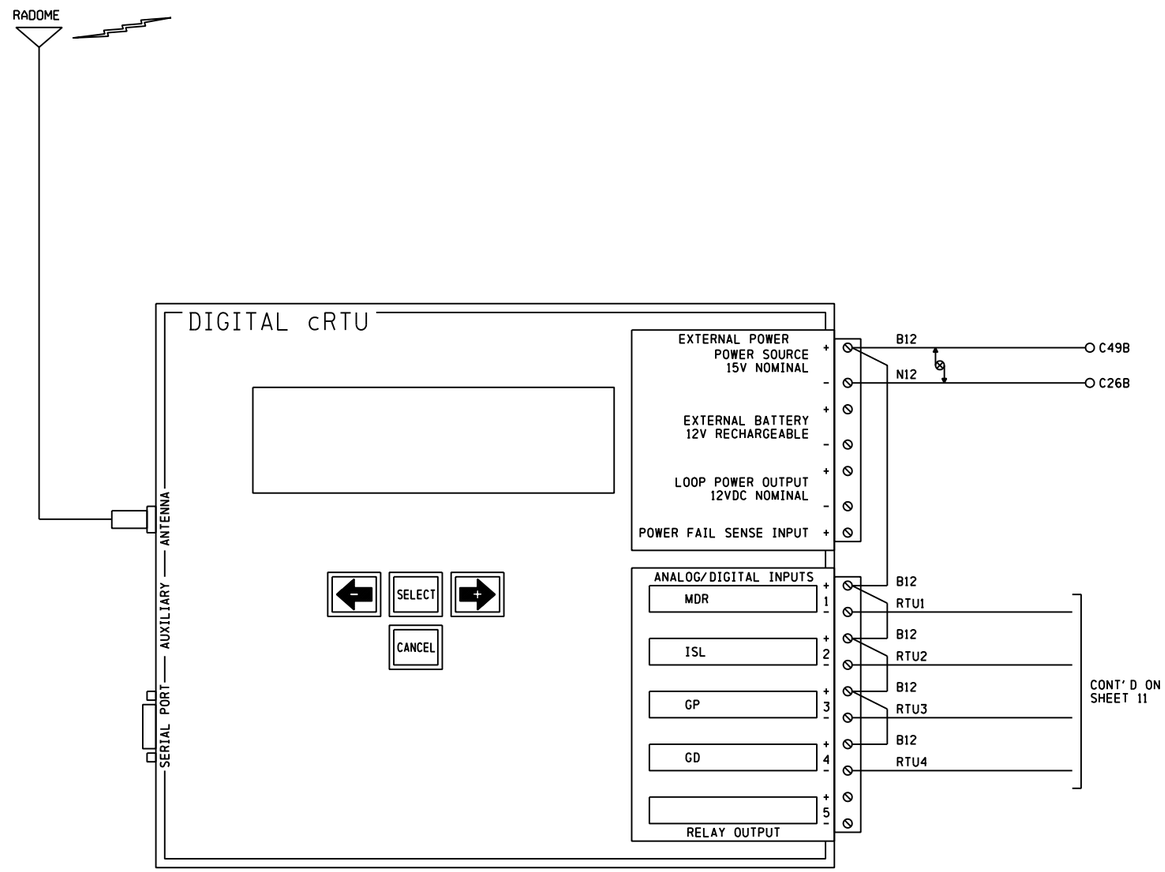

CONFIGKEY:	
MODEL:	C06C/ANA V2.3
SERIAL #:	
SITE IDENTIFIER:	689 739R

	LOW ALARM	RETURN	HIGH ALARM	RETURN
B12	11.6	12.6	15.6	14.6

NOTES:

1. ALL WIRING ON THIS SHEET TO BE #16 UNLESS OTHERWISE NOTED.
2. DENOTES TWISTED PAIR.

FIELD TO CONFIRM SETTINGS

PROPOSED
DESIGN NO. 11-0491
RED-IN YELLOW-OUT

AS INSTALLED
DATE _____
BY _____
(PRINT NAME)

PROPOSED D	M	Y	REVISIONS	D	C	COMPLETED D	M	Y	C
23	08	11	ADD CRTU	AVS	JEP				

REGION SOUTHERN
SUB. WAUKESHA 435

SIGNALS AND COMMUNICATIONS
HOMEWOOD
23 AUGUST 2011

DES. AVS
CH. JEP

CRTU UNIT WIRING

LAKE VILLA, IL
GRASS LAKE ROAD

WAU-053.03-17

DOT# 689 739R

17

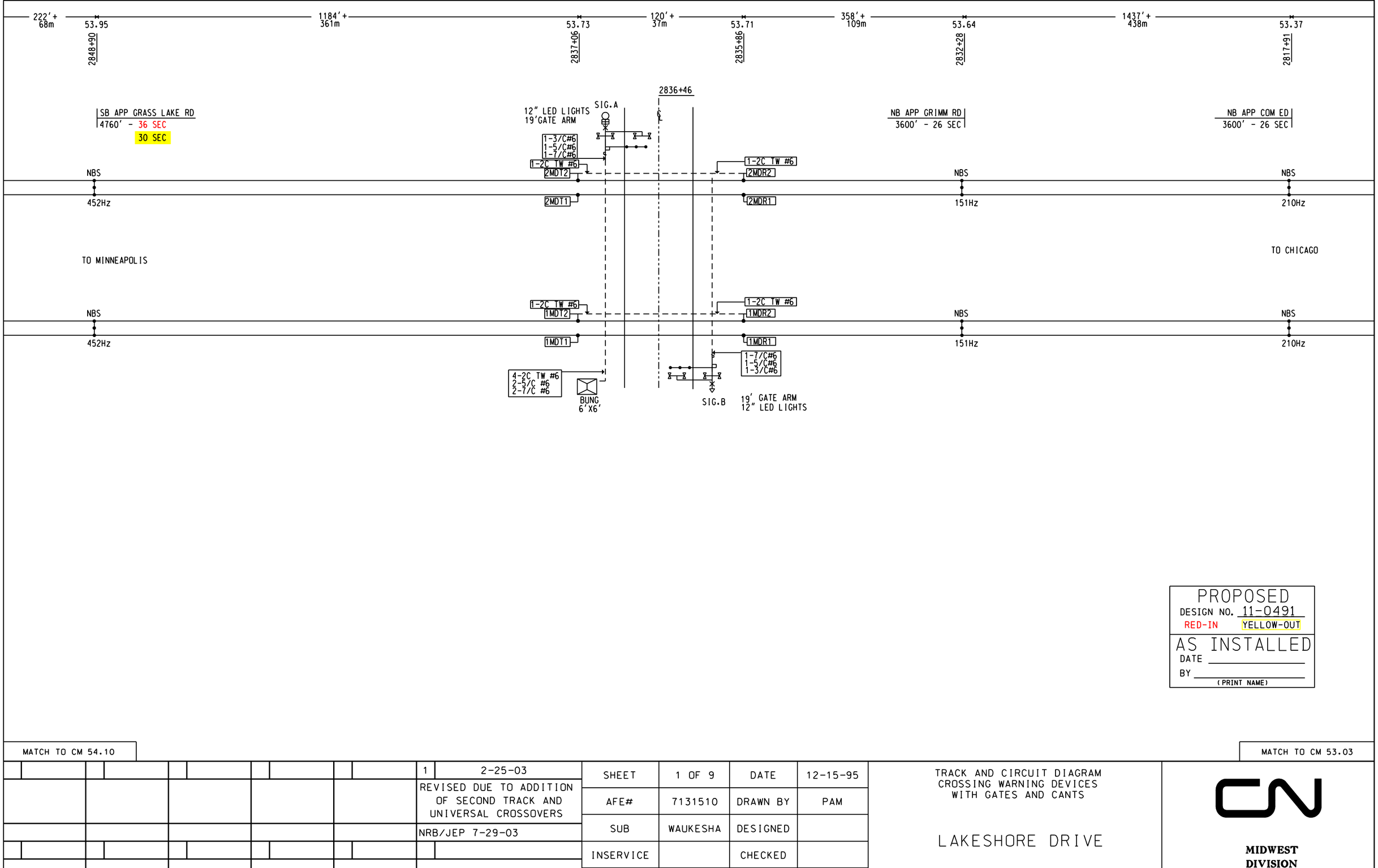

PROPOSED
DESIGN NO. 11-0491
RED-IN YELLOW-OUT

AS INSTALLED
DATE _____
BY _____
(PRINT NAME)

MATCH TO CM 54.10

MATCH TO CM 53.03

1	2-25-03	SHEET	1 OF 9	DATE	12-15-95
REVISED DUE TO ADDITION OF SECOND TRACK AND UNIVERSAL CROSSOVERS		AFE#	7131510	DRAWN BY	PAM
NRB/JEP 7-29-03		SUB	WAUKESHA	DESIGNED	
		INSERVICE		CHECKED	
		WIRED BY		APPROVED	
		CHECKED BY		DATE	

TRACK AND CIRCUIT DIAGRAM
CROSSING WARNING DEVICES
WITH GATES AND CANTS

LAKESHORE DRIVE

MIDWEST DIVISION

LOCATION	ANTIOCH, IL	DOT#	689 740K
COUNTY	LAKE	FILE#	CM053_72_SH_01_OF_09.DGN

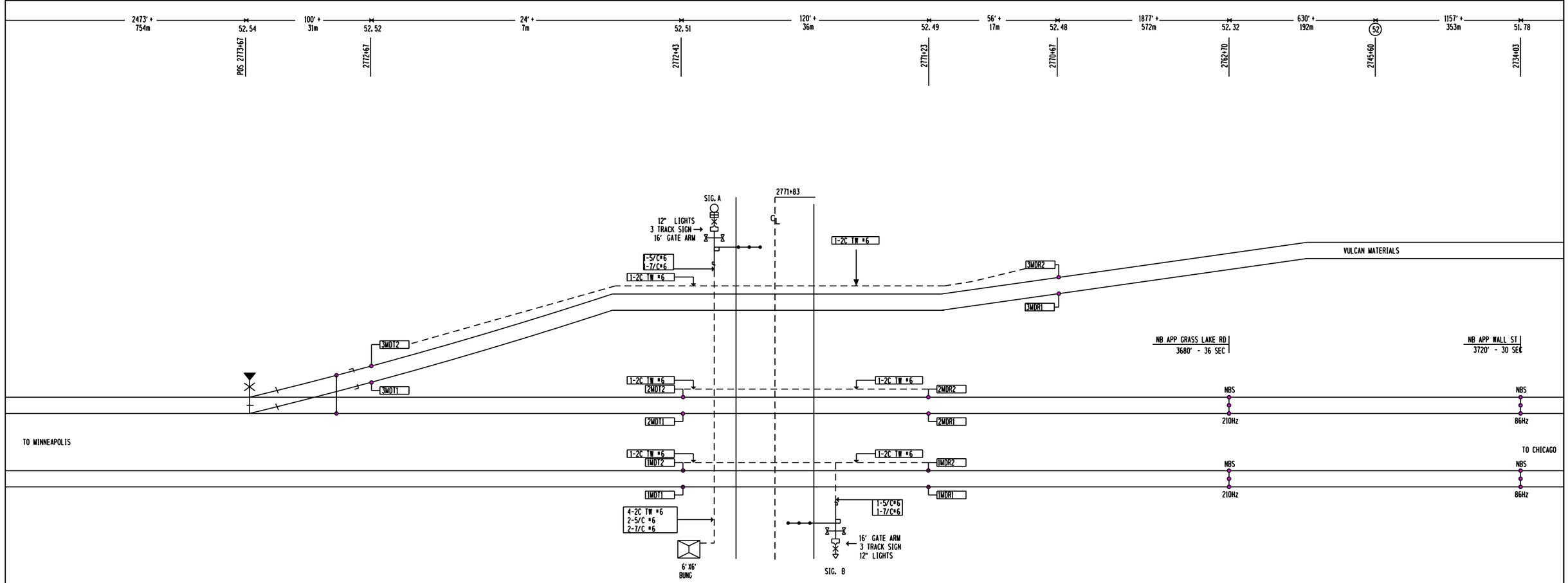

NOTES

- USE #10 AWG STRANDED WIRE MINIMUM UNLESS OTHERWISE NOTED.
- WIRES SHOWN DOTTED, END ON DIFFERENT PAGE.

MATCH TO CM 53.03

MATCH TO CM 51.00

1	2-25-03		
REVISED DUE TO ADDITION OF SECOND TRACK AND UNIVERSAL CROSSOVERS			
NRB/JEP 5-16-03			

SHEET	1 OF 10	DATE	10-8-99
AFE#	7131510	DRAWN BY	MAJ
SUB	WAUKESHA	DESIGNED	
INSERVICE	8-6-96	CHECKED	
WIRED BY		APPROVED	
CHECKED BY		DATE	

TRACK AND CIRCUIT DIAGRAM
CROSSING WARNING DEVICES
WITH GATES

WALL STREET

MIDWEST DIVISION

LOCATION	LAKE VILLA, IL	DOT#	689 783J
COUNTY	LAKE	FILE#	CM052_50_SH_01_OF_10.DGN