*Completion of this form is necessary to accomplish the statutory purpose as outlined in the Illinois Public Utilities Act, chapter 111 2/3, Sec. 9. Failure to provide the requested information may prevent your request from being processed. This form has been approved by the Forms Management Center.*

Form 3

STATE OF ILLINOIS
ILLINOIS COMMERCE COMMISSION

Petition for permission to make a major change in crossing protection, or to install new protection under 92 Illinois Administrative Code 1535.400 (d)

Date: **October 20, 2011**

To the Illinois Commerce Commission:

The petitioner **BNSF Railway** shows

(1) That it is a railroad company operating a line of railroad in the State of Illinois.

(2) That petitioner proposes and hereby makes application for authority to make a major change in crossing protection, or to install new protection, under 92 Illinois Administrative Code 1535.400 (d) adopted by this Commission.

(3) That the location of the crossing, the nature of protection now established and proposed to be established, and other pertinent facts in connection therewith, are set forth in the statement attached to and forming part of this petition.

(4) That petitioner's reasons and purpose, with reference to its said proposal are

**Install automatic flashing light signals and gates with a bell, controlled by CWT circuitry. Filed with the ICC under Docket # C-94-019-11**

(5) That the facts set forth in this petition and in the statement and plans or plats attached thereto, are, all of them, true and correct to the best of petitioner's knowledge and belief.

WHEREFORE, the petitioner prays that the Commission will, if deemed desirable by the Commission, set the aforesaid matter for hearing, and that the Commission enter an order or adopt a resolution consenting to and granting authority for the making of the said proposed changes in or additions to crossing protection.

**BNSF Railway**

By

**Daniel Dunn**
**General Construction Supervisor**
**309-345-6271**

(Attorney for Petitioner)

**(Use Enter key for up to four additional lines.)**

(Attorney's Address)

Statement, attached to and part of an application for permission to make a major change in crossing protection or to install new protection, under 92 Ill. Adm. Code 1535.400(d).

1. Name of Railroad Company **BNSF Railway**

2. Crossing Number **072585A**

3. Village or City **Near Bushnell**

4. Name of Street or Highway **TR 31**

5. Public Agency Maintaining Highway **Bushnell Township**

6. Protection now established: (Give full description. Indicate the hours of any manual protection.)

   **Flashers, Bell, CWT**

7. Protection desired: (Give details)

   **Install automatic flashing light signals and gates with a bell, controlled by CWT circuitry.**

8. Number of main tracks **1** Other tracks **0**

9. Number of passenger train movements: 6 a.m. to 6 p.m. **3** 6 p.m. to 6 a.m. **1**

10. Number of freight train movements: 6 a.m. to 6 p.m. **14** 6 p.m. to 6 a.m. **16**

11. Approximate number of switch movements: 6 a.m. to 6 p.m. _____ 6 p.m. to 6 a.m. _____

12. Maximum speed of trains at crossing on each track in each direction

| | | | | | |
|---|---|---|---|---|---|
| Track 1 N/E Bound | **79** | mph | S/W Bound | **79** | mph |
| Track 2 N/E Bound | **0** | mph | S/W Bound | **0** | mph |
| Track 3 N/E Bound | **0** | mph | S/W Bound | **0** | mph |

13. Passenger platforms served by tracks within the limits of track circuits, if any **0**

14. Where automatic signals or gates are proposed, approximately number of train or engine movements daily which would cause false indications or operation _____

15. Nature and approximate amount of street or highway traffic over crossing
**AADT 175**

16. In addition to the information listed hereinbefore in Form 3, attach a track plan or plat of the proposed crossing. This plan should show:

(a) Width and surface of highway.
(b) Highway intersections (including private driveways to be so indicated) and location of established highway signs or signals within 100 feet of crossing.
(c) Location of tracks, switches and other railroad facilities such as block signals, etc. within limits of track circuits, present and/or proposed.
(d) Where automatic protection is proposed, show proposed location of signals (sidelights, cantilevers, etc., if any).
(e) Show the length of each operation track section within the control limits of the crossing protection and its function.

ADDITIONAL INFORMATION

VERIFICATION

I, **(Daniel Dunn**, first being duly sworn upon oath depose and say that I am **General Construction Supervisor** of **BNSF Railway**, an **Deleware** corporation; that I have read the above and foregoing petition by me subscribed and know the contents thereof; that said contents are true in substance and in fact, except as to those matters stated upon information and belief, and as to those, I believe same to be true.

**Daniel Dunn**
**General Construction Supervisor**

# CROSSING DISABLE PROCEDURE

| | |
|---|---|
| Street: | **TR 31 – Bushnell, IL** |
| DOT: | **072 585 A** |
| Line Segment: | **0011** |
| Mile Post: | **188.57** |
| Plan Revision Date: | **July 18, 2011** |

Note: If the date stamp on the lower left corner of the plan is dated **after** the Plan Revision Date above, then this procedure is **VOID**.

**Before following the Crossing Disable Procedure, comply with Signal Instruction 7.2, 7.2A, 7.2B, 7.2C as appropriate. An understanding of the highway/railroad crossing circuits is required before any work is performed.**

**IF YOU ARE UNSURE OF ANY OF THESE PROCEDURES, CONSULT YOUR SUPERVISOR.**

Disable one approach on Track A1 but not the island (from Signal Instruction 7.2):

a. Shunt affected approach outside of the island and as close to track work as practicable. This shunt will adversely affect other approach.
b. Crossing should recover in approximately 20 seconds.
c. Verify crossing island circuit is effective.
d. Test unaffected tracks and approaches to make sure crossing warning system operates properly.

Note: **Shunt placement may also cause short or zero warning time for the adjacent crossing (TR 45A). Before placing any shunt, verify if the adjacent crossing will be affected and insure that proper procedures have been followed to protect that crossing.**

Disable both approaches on Track A1 but not the island (from Signal Instruction 7.2):

a. Shunt both approaches outside island and as close to track work as practicable in both directions.
b. Crossing should recover after approximately 20 seconds.
c. Verify crossing island circuit is effective.
d. Test unaffected tracks and approaches to make sure crossing warning system operates properly.

Note: **Shunt placement may also cause short or zero warning time for the adjacent crossing (TR 45A). Before placing any shunt, verify if the adjacent crossing will be affected and insure that proper procedures have been followed to protect that crossing.**

Disable the approach on Track A2 (from Signal Instruction 7.2):

a. Shunt affected approach and as close to track work as practicable.
b. Crossing should recover in approximately 20 seconds.
c. Verify crossing island circuit is effective.
d. Test unaffected tracks and approaches to make sure crossing warning system operates properly.


Copyright 2009 BNSF Railway Company. All rights reserved.

**Note:** **Shunt placement may also cause short or zero warning time for the adjacent crossing (TR 45A). Before placing any shunt, verify if the adjacent crossing will be affected and insure that proper procedures have been followed to protect that crossing.**

To disable Track A1 including the island (from Signal Instruction 7.2):

a. Install jumper across TRK #1 OOS terminals (AC10 to AC13)

To disable Track A2 including the island (from Signal Instruction 7.2):

a. Install jumper across TRK #2 OOS terminals (AC15 to AC18)

To disable entire crossing including the islands (from Signal Instruction 7.2):

a. Install jumper from TRK #1 OOS terminal (AC10) to TRK #2 OOS terminal (AC18)

**Note:** **You have now energized the XR relay and crossing signals are now inoperative.**

**WHEN RESTORING SYSTEM, VERIFY THAT ALL SHUNTS, SIMULATED TRACK DONUTS AND / OR TEST JUMPERS HAVE BEEN REMOVED AND ACCOUNTED FOR, AND CROSSING SIGNALS ARE TESTED FOR PROPER OPERATION.**


Copyright 2009 BNSF Railway Company. All rights reserved.

PLAN MUST NOT BE MODIFIED WITHOUT APPROVAL OF SIGNAL ENGINEERING COPYRIGHT 2011 BNSF RAILWAY COMPANY. ALL RIGHTS RESERVED.

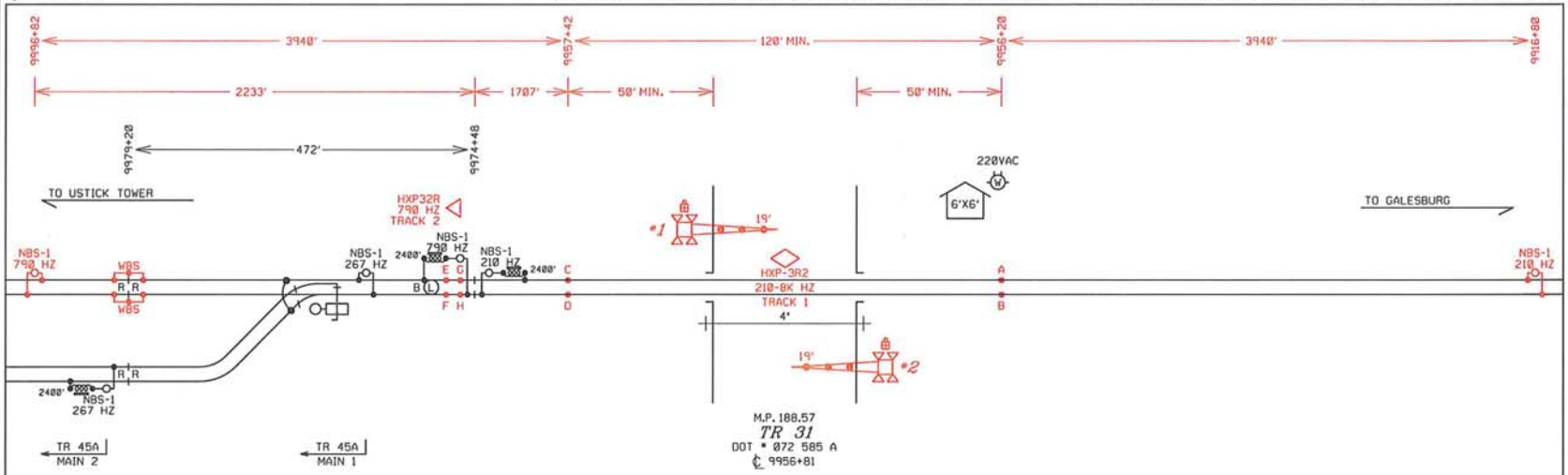


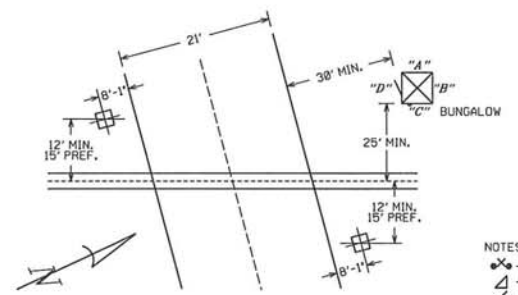


FOUNDATION PLACEMENT SKETCH
NOT TO SCALE

NOTES:
- -TEST TERMINAL
- -EQUALIZER
- -LINE ARRESTER
- -HEAVY DUTY ARRESTER
- -TWISTED WIRE 2 TURNS PER FOOT
- -CONNECTION TO REC./RTU

ALL WIRES #16 AWG UNLESS OTHERWISE NOTED

NOTES:

EQUIPMENT IS DESIGNED FOR 20 SECONDS MINIMUM WARNING TIME AT 79 MPH. (MAIN 1)
EQUIPMENT IS DESIGNED FOR 20 SECONDS MINIMUM WARNING TIME AT 35 MPH. (MAIN 2)
APPROACHES WERE LENGTHENED 10 SECONDS FOR SPEED VARIANCE AND BALLAST CHANGES (BT).
APPROACHES WERE LENGTHENED 4 SECONDS FOR EQUIPMENT RESPONSE TIME (ERT).
GATE LENGTH SHOWN IS MEASURED FROM MAST C/L TO GATE TIP.
ALL LAMPS TO BE LED

**BURLINGTON NORTHERN SANTA FE RAILWAY**

CROSSING CIRCUIT PLAN
TR 31 BUSHNELL, IL.

| | | | | | | | | | |
|---|---|---|---|---|---|---|---|---|---|
| REDRAWN SEQ#46692 DATE: 07-18-11 XRL/RAM | | | | | | | DESIGNED 07-18-11 SIGNAL ENGINEER XRL/RJP SEQ.# 46692 | LS 0011 | MP 188.57 | SH 01 OF 11 |

0011188.57x01c..dgn July 18, 2011

RED = IN YELLOW = OUT

Typ: 012210 Ch: N

PLAN MUST NOT BE MODIFIED WITHOUT APPROVAL OF SIGNAL ENGINEERING

COPYRIGHT 2011 BNSF RAILWAY COMPANY. ALL RIGHTS RESERVED.

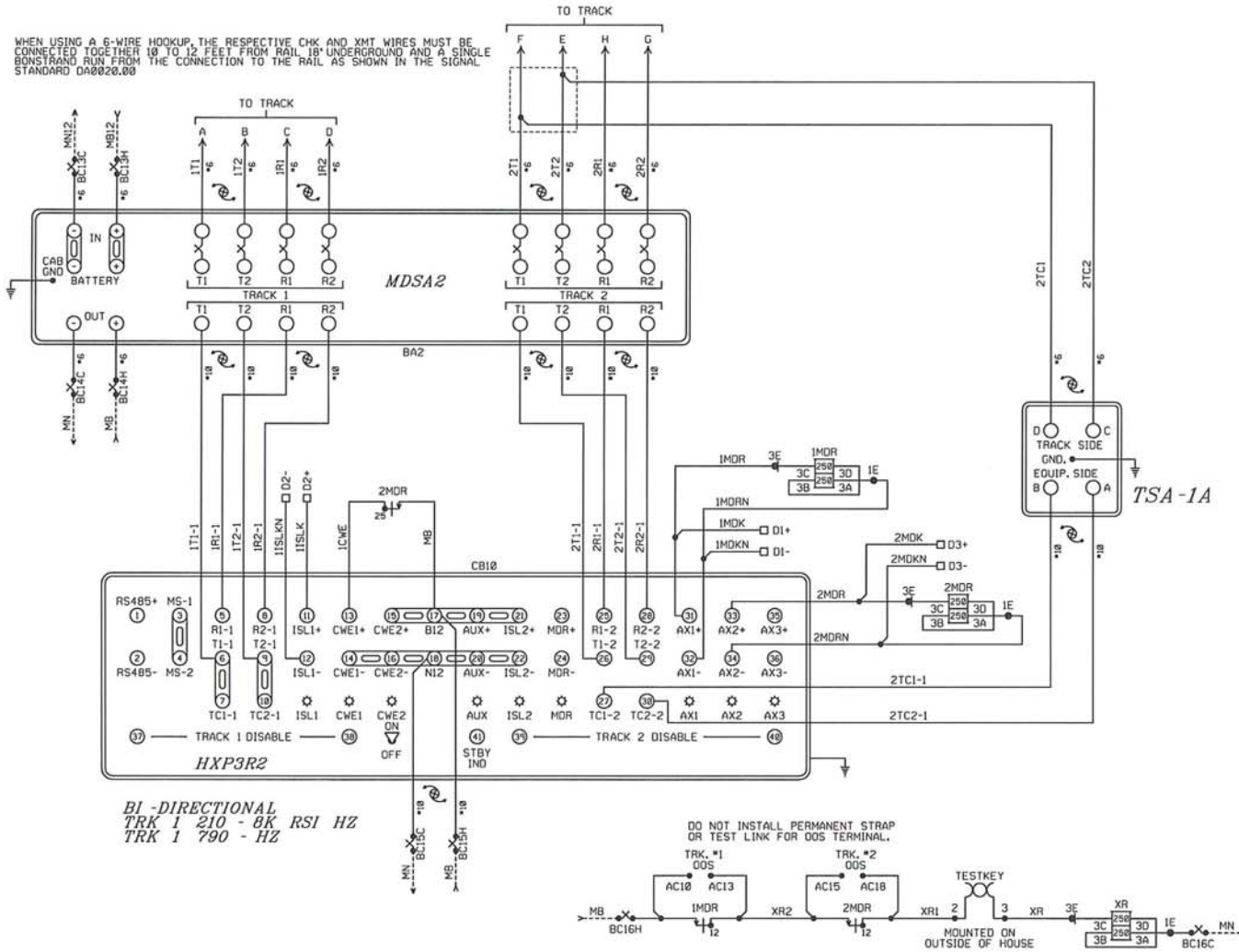


ALL NEW

DESIGNED 07-18-11 SIGNAL UPGRADE XRL/RJF SEQ.# 46692

**BURLINGTON NORTHERN SANTA FE RAILWAY**

HXP-3R2 TRACK CIRCUITS
TR 31 BUSHNELL, IL.

LS 0011 | MP 188.57 | SH 02 OF 11

0011188.57x02..dgn July 18, 2011

PLAN MUST NOT BE MODIFIED WITHOUT APPROVAL OF SIGNAL ENGINEERING

COPYRIGHT 2011 BNSF RAILWAY COMPANY. ALL RIGHTS RESERVED.

# PROGRAM INFORMATION

PROGRAM VERSION 42.0 OR LATER

*=FIELD ADJUSTMENT TO BE MADE ACCORDING TO THE HXP-3 INSTRUCTION MANUAL 100052-001 AD0 & SUPPLEMENTS.

## HXP-3R2 ADJUST SELECT ADJUSTMENTS

| NO. | ADJUSTMENT NAME | TRACK 1 | TRACK 2 |
|---|---|---|---|
| 1 | APPROACH LENGTH | 3940' | 3940' |
| 2 | WARNING TIME | 99 SEC. | 99 SEC. |
| 3 | LIA | * | * |
| 4 | TC | * | * |
| 5 | MD RESTART | * | * |

NOTE:

BEFORE PROGRAMMING ANY PARAMETERS/OPTIONS FOR THE HXP GO TO 'OPTION 49' AND RESET ALL LOCAL PARAMETERS TO FACTORY DEFAULT VALUES. SEE HXP-3 MANUAL 100052-001 AD0 PAGE 4-14.

## OPTION ADJUSTMENTS

| NO. | ABBREVIATION | TRACK 1 | TRACK 2 |
|---|---|---|---|
| 1 | TK-ENA | 'UP' | 'UP' |
| 2 | TK FO | 210 HZ | 790 HZ |
| 3 | CW/MD | 'C' | 'C' |
| 4 | UNI-BI | 'b' (BI) | NA |
| 5 | NBS-C | * RX | * RX |
| | | * FEET | * FEET |
| 6 | CWEWT | DL (80 SEC.) | DL (80 SEC.) |
| 7 | LOS | DL (16 SEC.) | DL (16 SEC.) |
| 8 | IJ-LOS | DL (5 SEC.) | DL (5 SEC.) |
| 9 | BC | * | * |
| 10 | P-COMP | * | * |
| 11 | AX1 | SEE AX ADJ. | SEE AX ADJ. |
| 12 | AX2 | SEE AX ADJ. | SEE AX ADJ. |
| 13 | AX3 | SEE AX ADJ. | SEE AX ADJ. |
| 17 | MOR-AX/OF-TK | 0' | 0' |
| | CJ-LOS | DL (0) | DL (0) |
| | PJ-DET | DL (15 SEC.) | DL (15 SEC.) |
| | PJ-RX | DL (15) | DL (15) |
| 18 | MD-TMR | DL (10 MIN.) | DL (10 MIN.) |
| 19 | MIN-WT | DL (0) | DL (0) |
| 20 | FS-RX | DL (0) | DL (0) |
| | FS-TM | DL (10 MIN.) | DL (10 MIN.) |
| 21 | POS-RX | DL (0) | DL (0) |
| | POS-TM | DL (0) | DL (0) |
| 22 | AR-RX | DL (0) | DL (0) |
| | AR-TM | DL (10 MIN.) | DL (10 MIN.) |
| 47 | ATO-RX | UP | UP |
| 48 | PF-ENA | 'dn' | 'dn' |

## AX ADJUSTMENTS

| NO. | ABBREVIATION | AX 1 | AX 2 | AX 3 |
|---|---|---|---|---|
| 1 | TK-ASN | 1 | 2 | 1,2 |
| 2 | OF-TK1 | 0' | NA | NA |
| 3 | OF-TK2 | NA | NA | NA |
| 4 | WT | 30 SEC. | 30 SEC. | 99 SEC. |
| 5 | MD-RST | (0) | (0) | (0) |
| 6 | CW/MD | 'C' | 'C' | 'C' |
| 7 | CJ-LOS | DL (0) | DL (0) | DL (0) |
| 8 | PJ-DET | DL (15 SEC.) | DL (15 SEC.) | DL (15 SEC.) |
| 9 | PJ-RX | DL (15) | DL (15) | DL (15) |
| 10 | POS-ST | 'dn' | 'dn' | 'dn' |

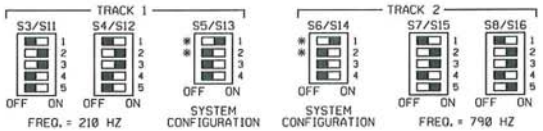


NOTES: FOR S5/S13 AND S6/S14

*1.) ACTUATOR 1 SELECTS NORMAL APPROACH WHEN SET TO ON POSITION.

*2.) WITH ACTUATOR 1 IN OFF POSITION ACTUATOR 2 SELECTS SHORT APPROACH WHEN OFF AND SELECTS VERY SHORT WHEN ON.

3.) ACTUATOR 3 OFF SELECTS HXP OPERATION.

4.) ACTUATOR 4 OFF = NORMAL MUX TABLE
ACTUATOR 4 ON = ALTERNATE MUX TABLE

## SWITCH INFORMATION

| SWITCH | TRACK 1 | TRACK 2 |
|---|---|---|
| MASTER/SLAVE | MASTER | |
| RSI FAULT JUMPER | 0 | NA |
| RSI-LOS JUMPER | 1 | |
| TLM W1 JUMPER | PINS 1-2 | |
| TLM W2 JUMPER | PINS 1-2 | |
| TLM W3 JUMPER | PINS 1-2 | |
| MINUTE TIMEOUT | 5 MIN | |
| CW/MD | CW | |
| STANDBY/AUTO/NORMAL | AUTO | |

NOTES: DL= DEFAULT LEVEL
NA= NON APPLICABLE

ALL NEW

DESIGNED 07-18-11 SIGNAL UPGRADE XRL/RJP SEQ.# 46692

BURLINGTON NORTHERN SANTA FE RAILWAY

HXP-3R2 PROGRAM INFORMATION
TR 31 BUSHNELL, IL.

LS 0011 | MP 188.57 | SH 03 OF 11

PLAN MUST NOT BE MODIFIED WITHOUT APPROVAL OF SIGNAL ENGINEERING COPYRIGHT 2011 BNSF RAILWAY COMPANY. ALL RIGHTS RESERVED.

PROGRAM BNSF4

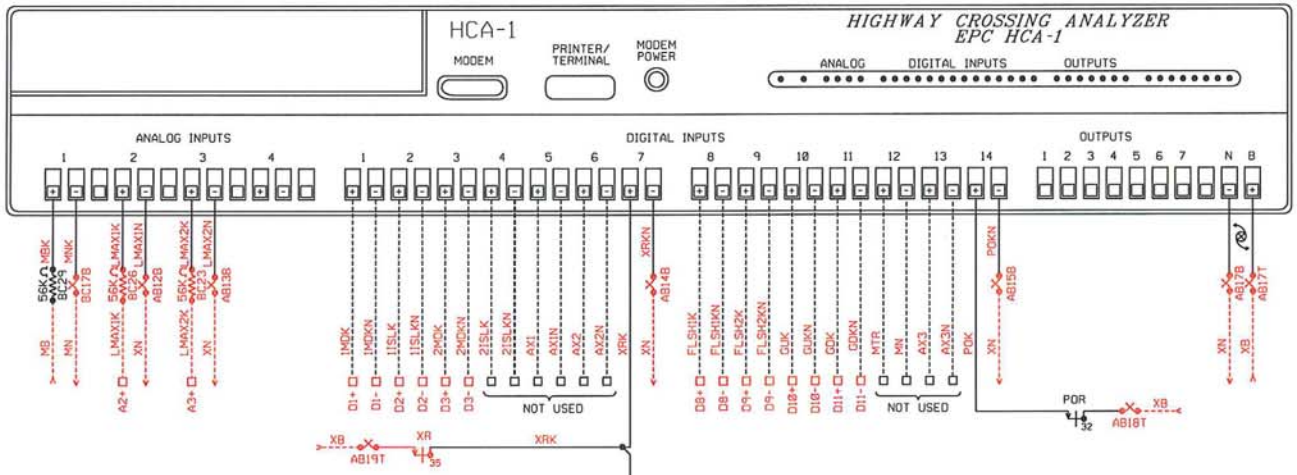


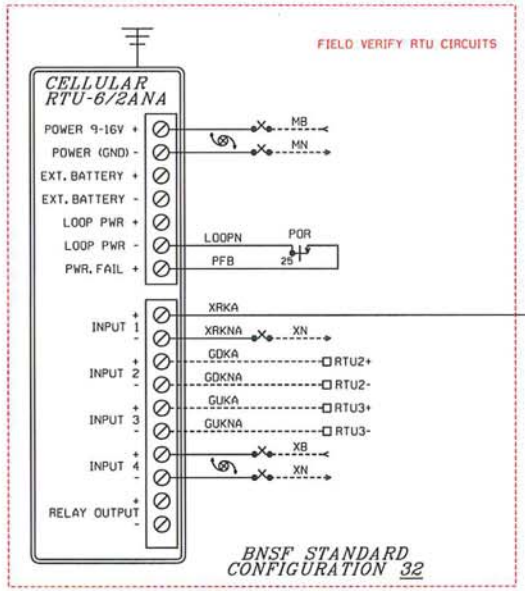


BNSF STANDARD CONFIGURATION 32

NOTICE:
THERE ARE FIELD VERIFY NOTES THAT HAVE NOT BEEN VERIFIED
DATE 07-18-11

BURLINGTON NORTHERN SANTA FE RAILWAY

HCA CIRCUIT PLAN
TR 31 BUSHNELL, IL.

| | | | | | | | | | | |
|---|---|---|---|---|---|---|---|---|---|---|
| REDRAWN SEQ*46692 DATE: 07-18-11 XRL/RAM | | | | | | | DESIGNED 07-18-11 SIGNAL UPGRADE XRL/RAJF SEQ.* 46692 | LS 0011 | MP 188.57 | SH 04 OF 11 |

0011188.57x04c..dgn July 18, 2011

RED = IN YELLOW = OUT

PLAN MUST NOT BE MODIFIED WITHOUT APPROVAL OF SIGNAL ENGINEERING COPYRIGHT 2011 BNSF RAILWAY COMPANY. ALL RIGHTS RESERVED.

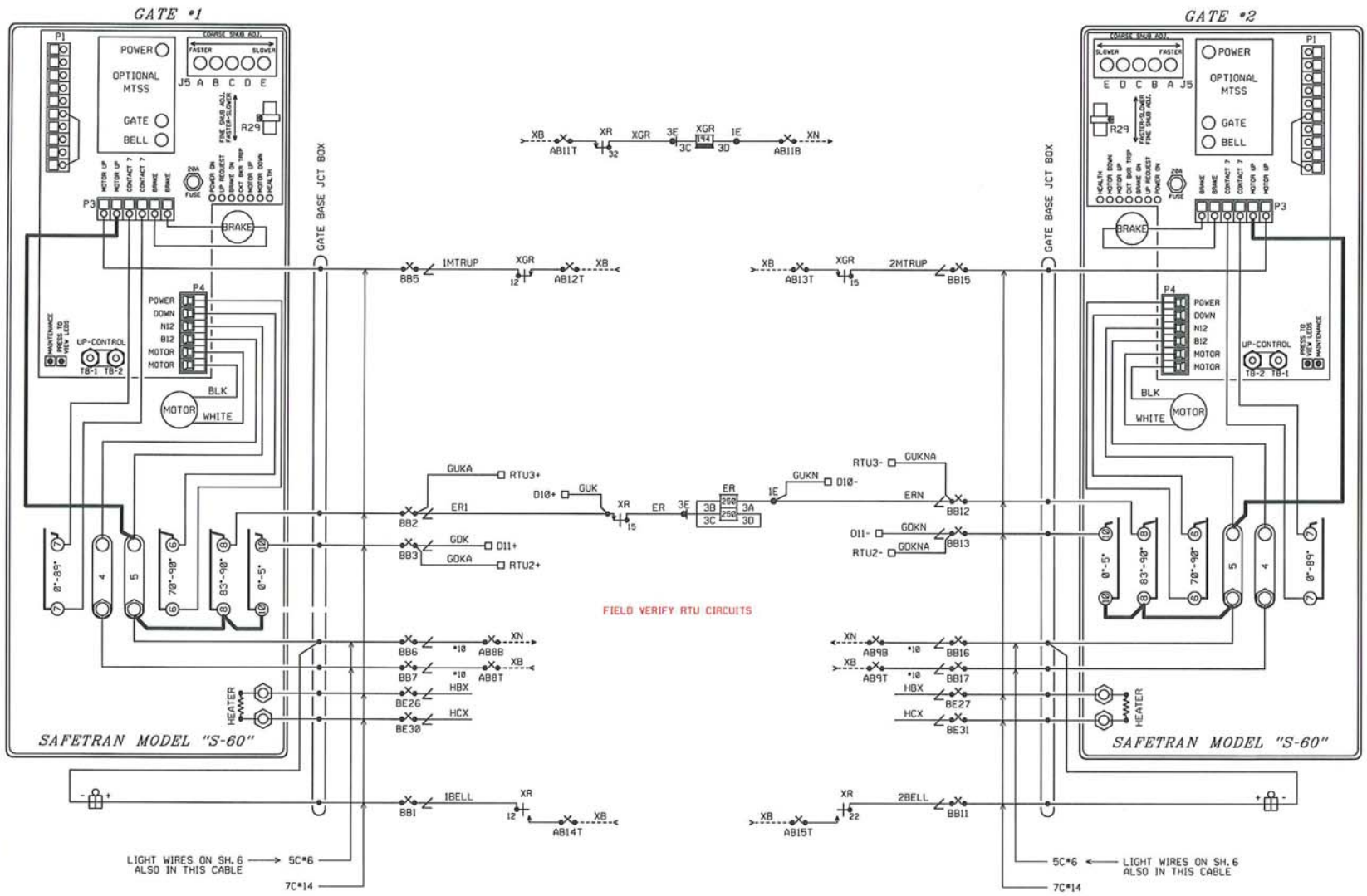


NOTES:
1. ADD JUMPERS IN GATE SHOWN IN BOLD.
2. MAXIMUM WIRE SIZE FOR TERMINAL 5 TO MOTOR UP CONTROL (-) IS #12 AWG.

ALL NEW

DESIGNED 07-18-11 SIGNAL UPGRADE XRL/RJF SEQ.# 46692

**BURLINGTON NORTHERN SANTA FE RAILWAY**

GATE CIRCUIT PLAN
TR 31 BUSHNELL, IL.

| LS 0011 | MP 188.57 | SH 05 OF 11 |
|---|---|---|

0011188.57x06c..dgn July 18, 2011

PLAN MUST NOT BE MODIFIED WITHOUT APPROVAL OF SIGNAL ENGINEERING COPYRIGHT 2011 BNSF RAILWAY COMPANY. ALL RIGHTS RESERVED.

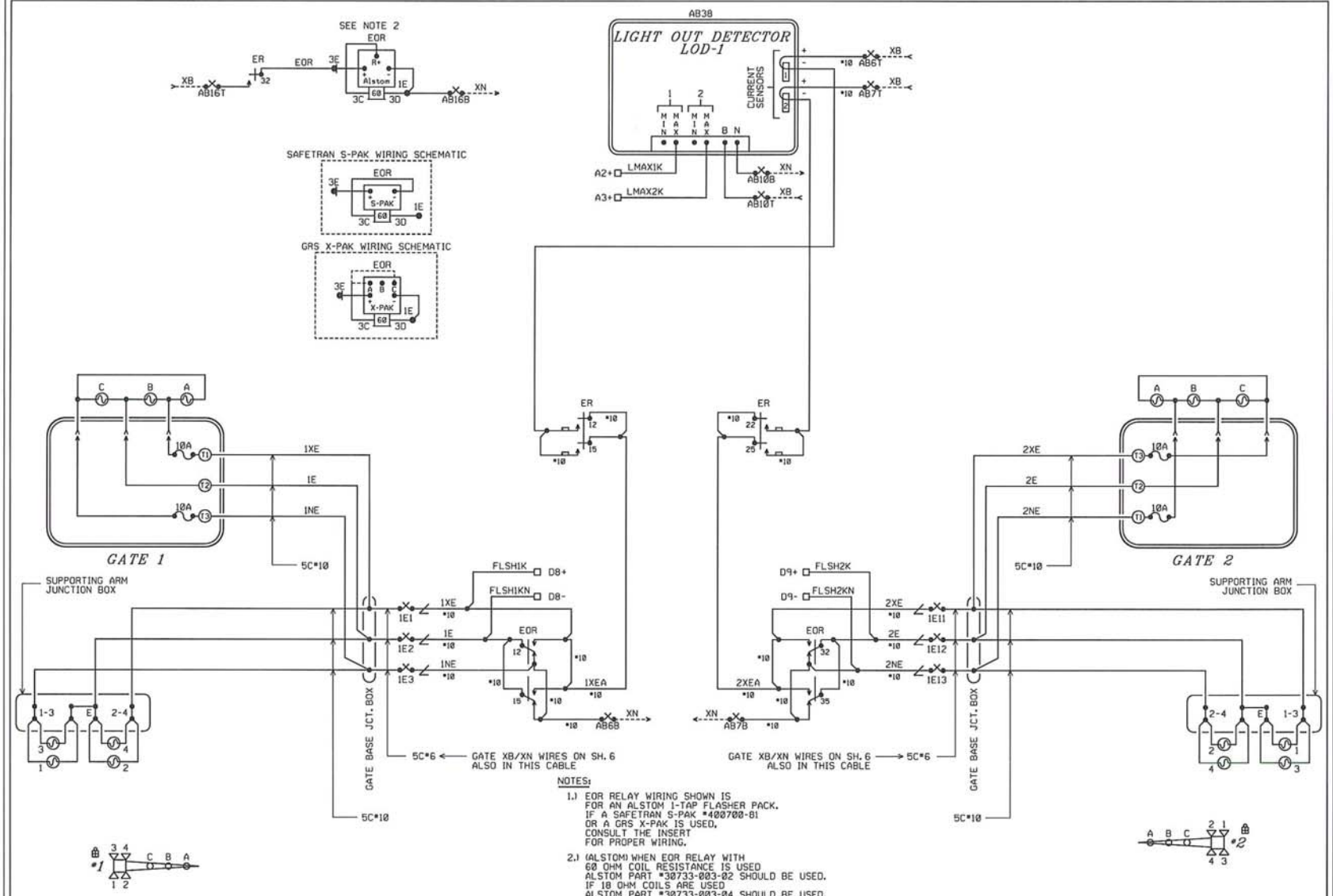


NOTES:

1.) EOR RELAY WIRING SHOWN IS FOR AN ALSTOM 1-TAP FLASHER PACK. IF A SAFETRAN S-PAK *400700-81 OR A GRS X-PAK IS USED, CONSULT THE INSERT FOR PROPER WIRING.

2.) (ALSTOM) WHEN EOR RELAY WITH 60 OHM COIL RESISTANCE IS USED ALSTOM PART *30733-003-02 SHOULD BE USED. IF 18 OHM COILS ARE USED ALSTOM PART *30733-003-04 SHOULD BE USED.

3.) (X-PAK) WHEN EOR RELAY WITH 60 OHM COIL RESISTANCE IS USED CONNECT JUMPER FROM 3C TO 'A'. IF 18 OHM COILS ARE USED CONNECT JUMPER FROM 3C TO 'C'.

4.) (S-PAK) DO NOT USE S-PAK WITH 18 OHM COILS

ALL NEW

DESIGNED 07-18-11 SIGNAL UPGRADE XRL/RJF SED.* 46642

BURLINGTON NORTHERN SANTA FE RAILWAY

FLASHER CIRCUIT PLAN
TR 31 BUSHNELL, IL.

| LS 0011 | MP 188.57 | SH 06 OF 11 |
|---|---|---|

0011188.57x07c..dgn July 18, 2011

PLAN MUST NOT BE MODIFIED WITHOUT APPROVAL OF SIGNAL ENGINEERING COPYRIGHT 2011 BNSF RAILWAY COMPANY. ALL RIGHTS RESERVED.

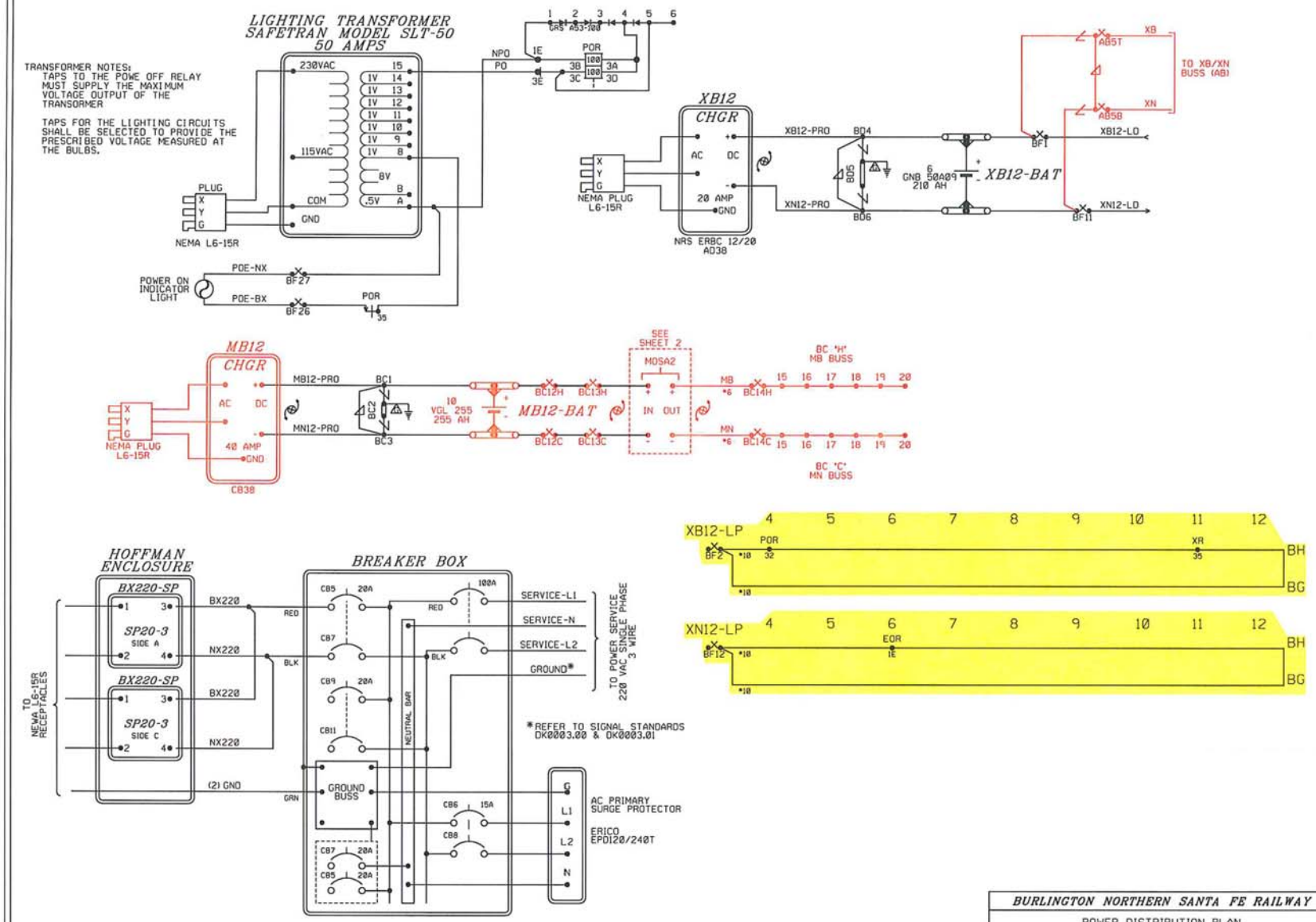


BURLINGTON NORTHERN SANTA FE RAILWAY

POWER DISTRIBUTION PLAN
TR 31 BUSHNELL, IL.

| | | | | | | | | |
|---|---|---|---|---|---|---|---|---|
| REDRAWN SEQ#46692 DATE: 07-18-11 XRL/RAM | | | | | | DESIGNED 07-18-11 SIGNAL UPGRADE XRL/RJF SEQ.# 46692 | LS 0011 | MP 188.57 | SH 07 OF 11 |

0011188_57x05c_.dgn July 18, 2011

RED = IN YELLOW = OUT

PLAN MUST NOT BE MODIFIED WITHOUT APPROVAL OF SIGNAL ENGINEERING COPYRIGHT 2011 BNSF RAILWAY COMPANY. ALL RIGHTS RESERVED.

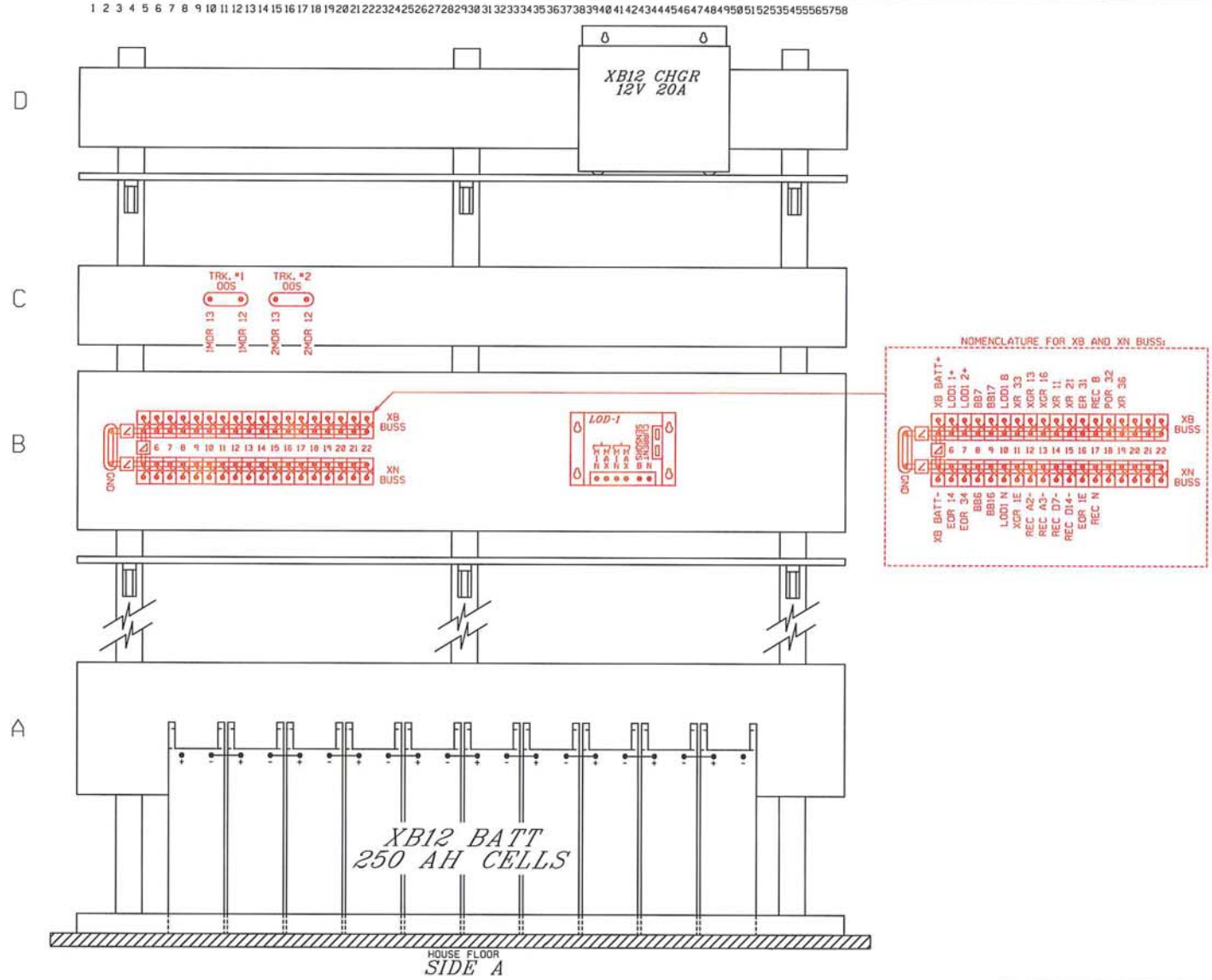


SIDE A

| | | | | | | | |
|---|---|---|---|---|---|---|---|
| REDRAWN SEQ#46692 DATE: 07-18-11 XRL/RAM | | | | | | DESIGNED 07-18-11 SIGNAL UPGRADE XRL/RJF SEQ.# 46692 | |
| 0011188_57x09c..dgn July 18, 2011 | | | | | | RED = IN YELLOW = OUT | |

BURLINGTON NORTHERN SANTA FE RAILWAY

SIDE 'A' SHELF LAYOUT
TR 31 BUSHNELL, IL.

LS 0011 | MP 188.57 | SH 08 OF 11

PLAN MUST NOT BE MODIFIED WITHOUT APPROVAL OF SIGNAL ENGINEERING

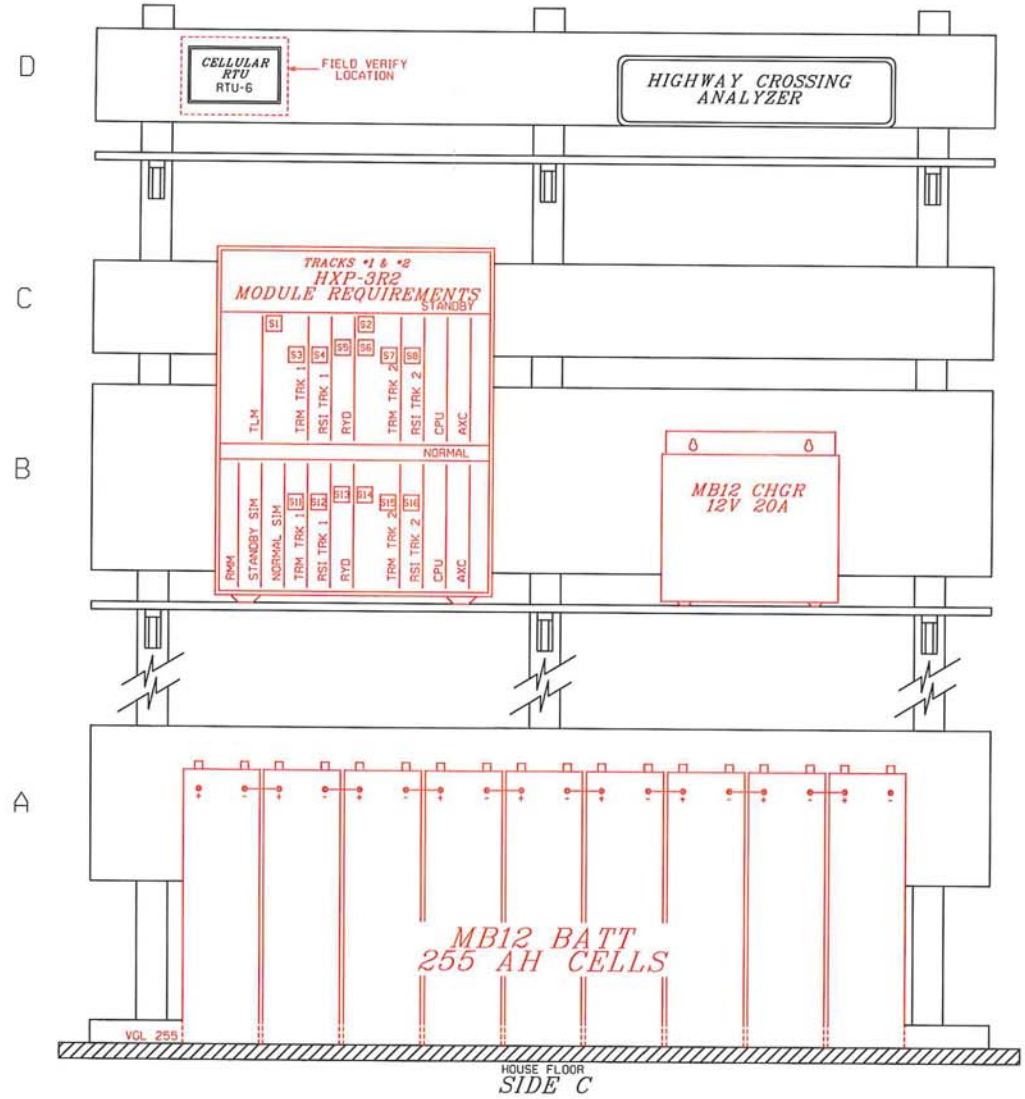


NOTICE:
THERE ARE FIELD VERIFY NOTES THAT HAVE NOT BEEN VERIFIED
DATE 07-18-11

BURLINGTON NORTHERN SANTA FE RAILWAY

SIDE 'C' SHELF LAYOUT
TR 31 BUSHNELL, IL.

| | | | | | | | | | |
|---|---|---|---|---|---|---|---|---|---|
| REDRAWN SEQ#46692 DATE: 07-18-11 XRL/RAM | | | | | | DESIGNED 07-18-11 SIGNAL UPGRADE XRL/RJF SEQ.# 46692 | LS 0011 | MP 188.57 | SH 09 OF 11 |

0011188_57x10c_.dgn July 18, 2011

RED = IN YELLOW = OUT

PLAN MUST NOT BE MODIFIED WITHOUT APPROVAL OF SIGNAL ENGINEERING COPYRIGHT 2011 BNSF RAILWAY COMPANY. ALL RIGHTS RESERVED.

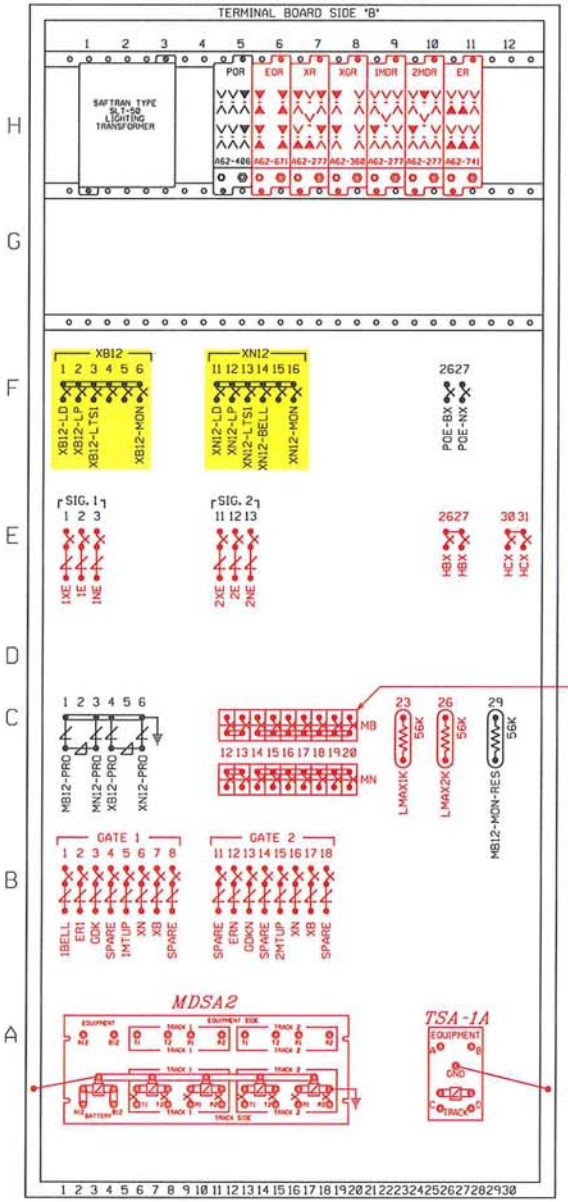


RELAY CROSS REFERENCE

| GRS | SAFETRAN |
|---|---|
| A62-120 | 400510 |
| A62-205 | 400021 |
| A62-277 | 400004 |
| A62-360 | 400200 |
| A62-406 | 400800 |
| A62-674 | 400700-7X |
| A62-741 | 400005 |

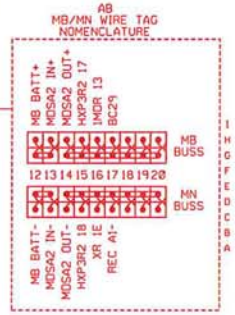


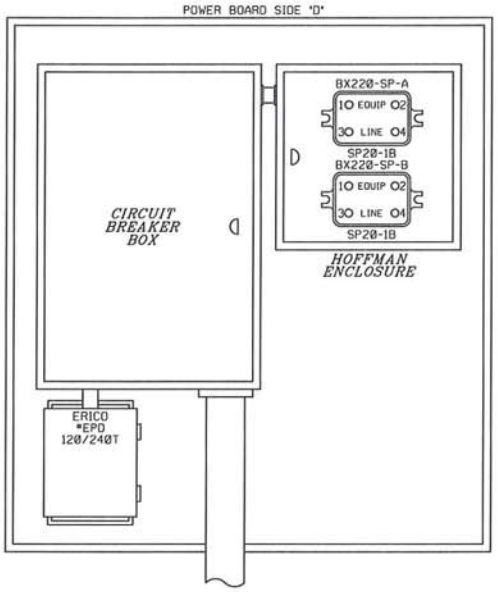


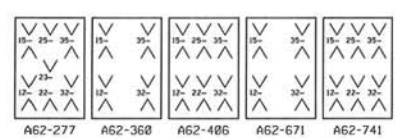


▼ = CONTACT USED
V = CONTACT NOT USED

**BURLINGTON NORTHERN SANTA FE RAILWAY**

SIDE 'B' TERMINAL & SIDE 'D' POWER BOARD LAYOUTS
TR 31 BUSHNELL, IL.

| | | | |
|---|---|---|---|
| REDRAWN SEQ*46692 DATE: 07-18-11 XRL/RAM | DESIGNED 07-18-11 SIGNAL UPGRADE XRL/RJP SEQ.* 46692 | LS 0011 | MP 188.57 | SH 10 OF 11 |

0002463_74x8c_.dgn July 18, 2011

RED = IN YELLOW = OUT

PLAN MUST NOT BE MODIFIED WITHOUT APPROVAL OF SIGNAL ENGINEERING COPYRIGHT 2011 BNSF RAILWAY COMPANY. ALL RIGHTS RESERVED.

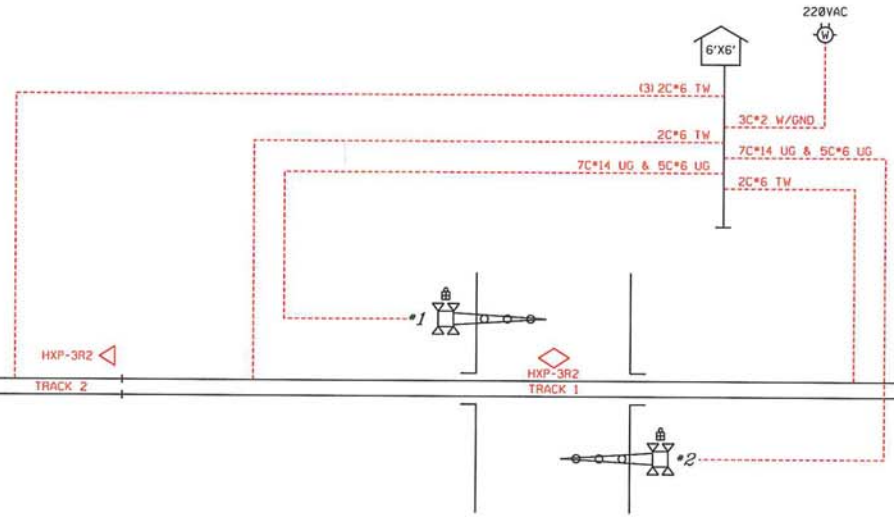


M.P. 188.57
*TR 31*
DOT # 072 585 A

| | | | | | | | | |
|---|---|---|---|---|---|---|---|---|
| REDRAWN SEQ#46692 DATE: 07-18-11 XRL/RAM | | | | | | | DESIGNED 07-18-11 SIGNAL UPGRADE XRL/RAM SEQ.# 46692 | |

RED = IN YELLOW = OUT

0011188_57x11c..dgn July 18, 2011

| | | |
|---|---|---|
| *BURLINGTON NORTHERN SANTA FE RAILWAY* | | |
| CABLE LAYOUT TR 31 BUSHNELL, IL. | | |
| LS 0011 | MP 188.57 | SH 11 OF 11 |