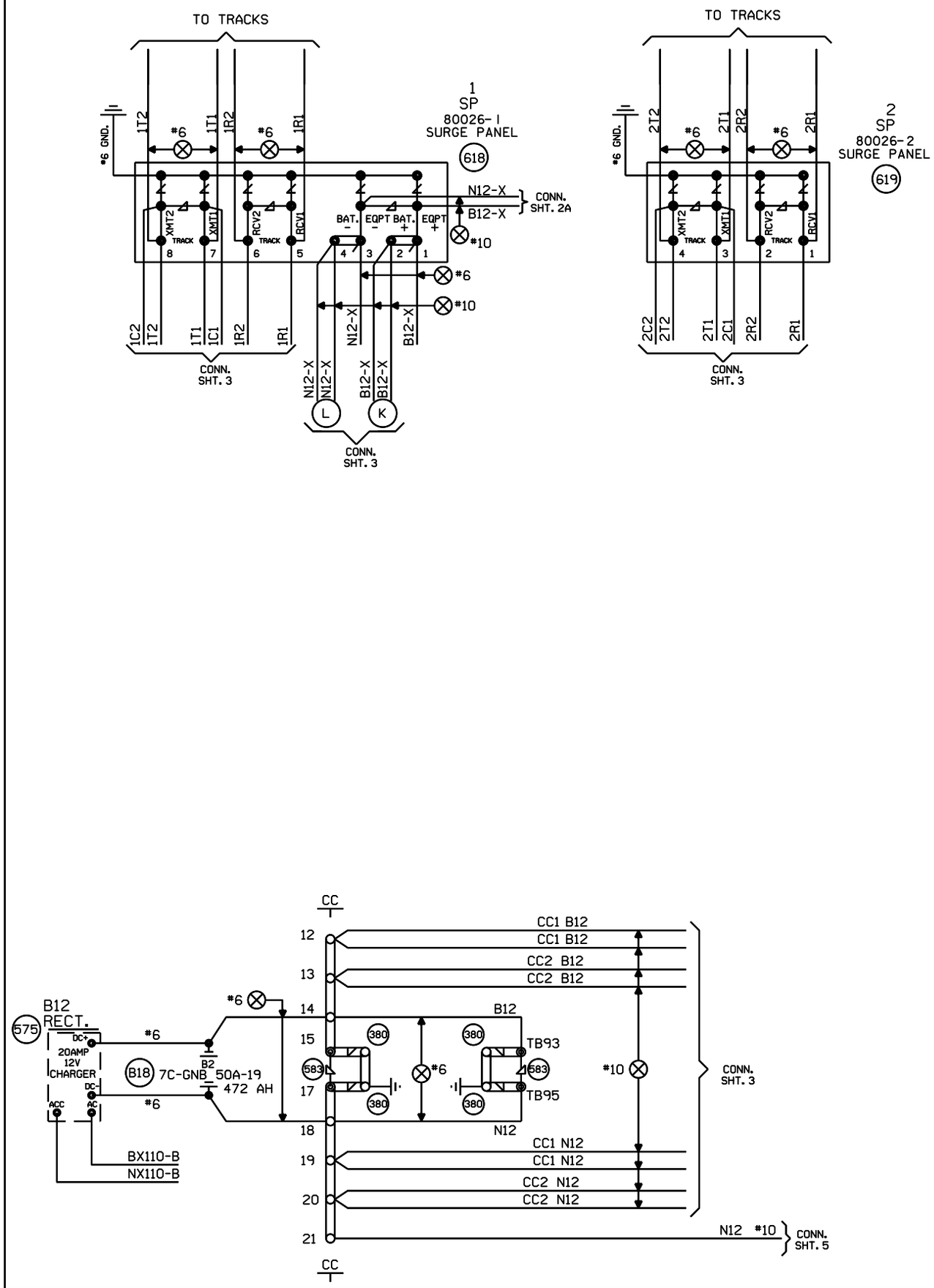

NEW SHEET

Designed: 01/12/11 INSTALL FLASHERS AND GATES WITH CWT AT M.P. 183.66 TR 51 Rec#: WO#: 07265 IS: /TJD / /IRG/JTB	MODIFICATION LEVEL		UNION PACIFIC QUALITY PRODUCTIVITY SAFETY SIGNAL DESIGN	Date: 01/12/11 Des: IRG Chk: TJD AFE: 07265	UNION PACIFIC RAILROAD FINDLAY, ILLINOIS TR 51 PANA SUBDIVISION Office of Sr AVP Engineering - Signal/TCO Omaha, Nebraska	Sh.: 4 DOT 166958J MP: 183.66 ID: 030118366.4X
	Q.A. LAST LEVEL CHECKED	DU				
	LAST LEVEL MOD THIS TYPICAL	DU				
	LAST LEVEL BY DESIGNER	DU				
	CHANGED FROM TYPICAL?	Y				
	REV 01.24.11 4K 4TKSPGFC.4					

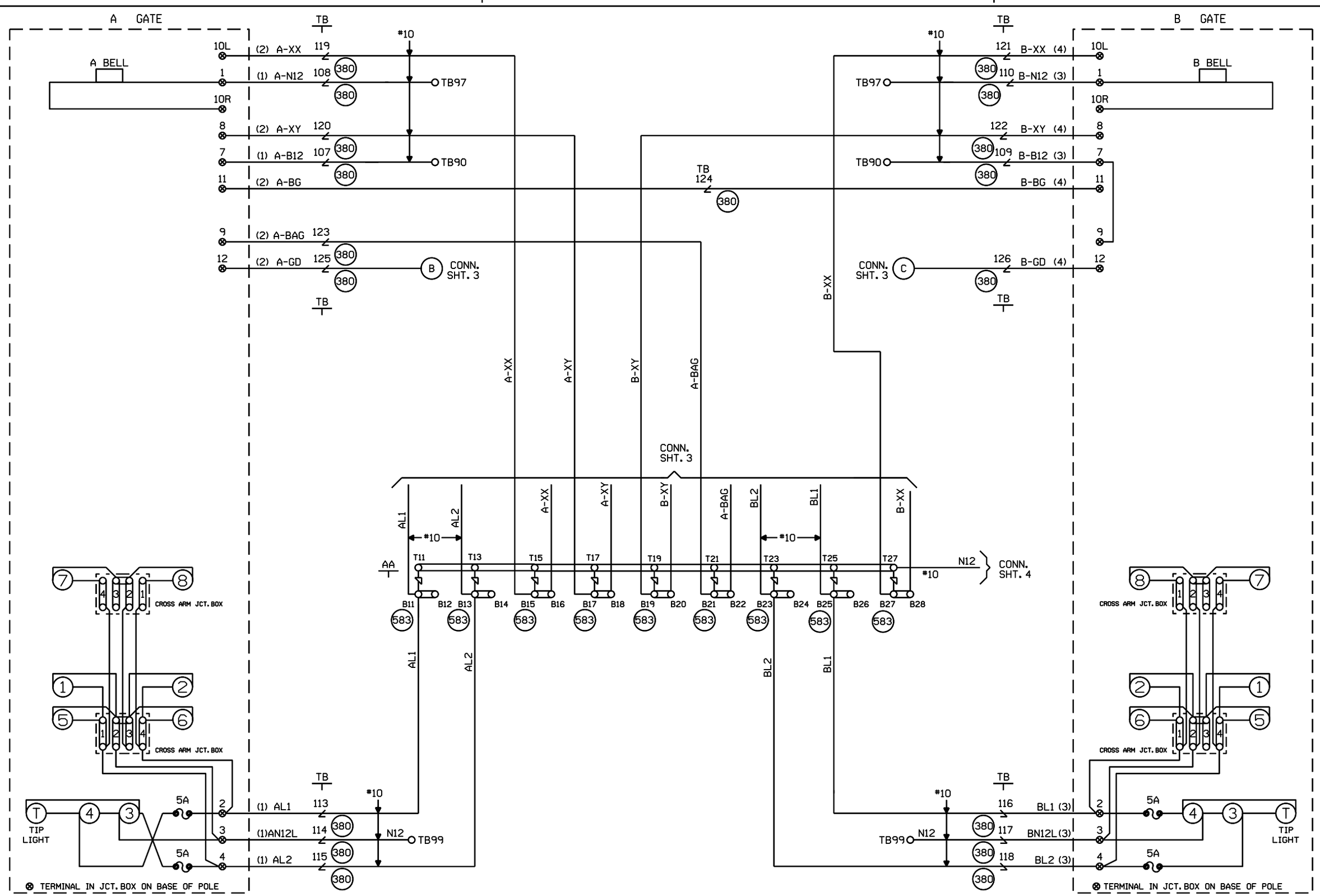

CABLE TABULATION

CABLE NO. 1 5C. NO.6 U.G.B.T. TO GATE A
CABLE NO. 2 7C. NO.14 U.G.B.T. TO GATE A
CABLE NO. 3 5C. NO.6 U.G.B.T. TO GATE B
CABLE NO. 4 7C. NO.14 U.G.B.T. TO GATE B

NEW SHEET

Designed: 01/12/11

INSTALL FLASHERS AND GATES WITH CWT AT M.P. 183.66 TR 51

Rec#: 15t WO#: 07265 /TJD /IRG /JTB

MODIFICATION LEVEL	
Q. A. LAST LEVEL CHECKED	DU
LAST LEVEL MOD THIS TYPICAL	DU
LAST LEVEL BY DESIGNER	DU
CHANGED FROM TYPICAL?	Y

REV 01.24.11 4K GFSLTYP.5

UNION PACIFIC
QUALITY PRODUCTIVITY SAFETY
SIGNAL DESIGN

Date: 01/12/11
Des: IRG
Chk: TJD
AFE: 07265

UNION PACIFIC RAILROAD

FINDLAY, ILLINOIS
TR 51
PANA SUBDIVISION

Office of Sr AVP Engineering - Signal/TCO Omaha, Nebraska

Sh.: 5
DOT 166958J
MP: 183.66
ID: 030118366.5X

WCH 3593-E

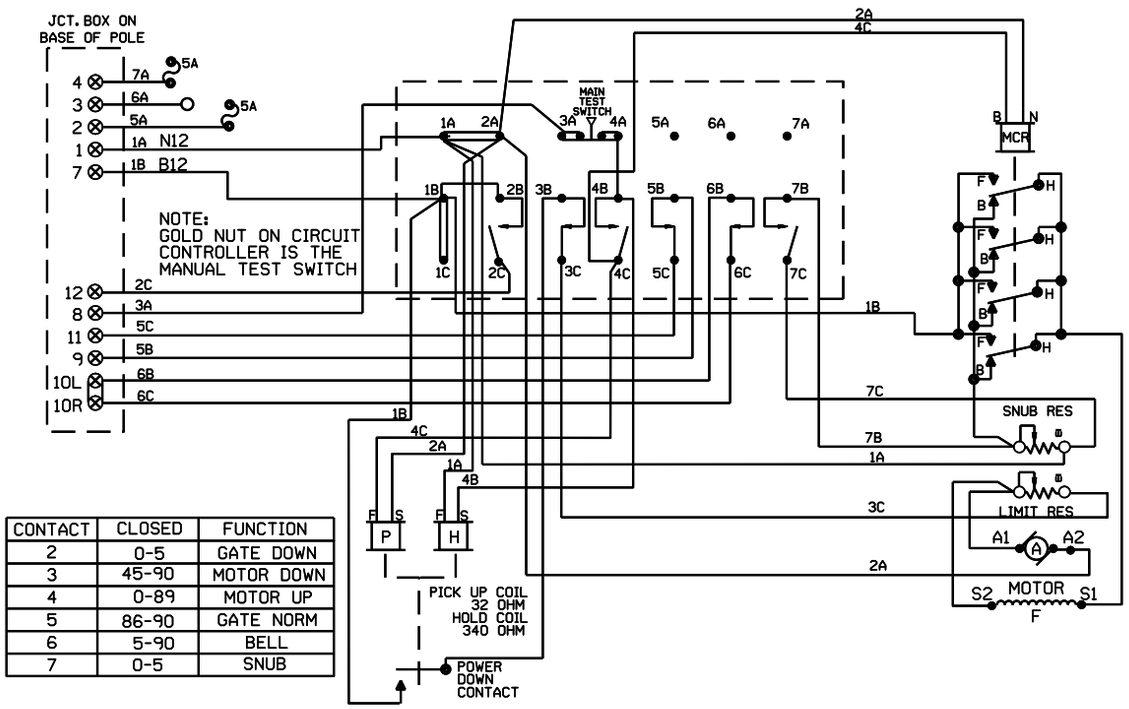

CONTACT	CLOSED	FUNCTION
2	0-5	GATE DOWN
3	45-90	MOTOR DOWN
4	0-89	MOTOR UP
5	86-90	GATE NORM
6	5-90	BELL
7	0-5	SNUB

WCH 3597-E

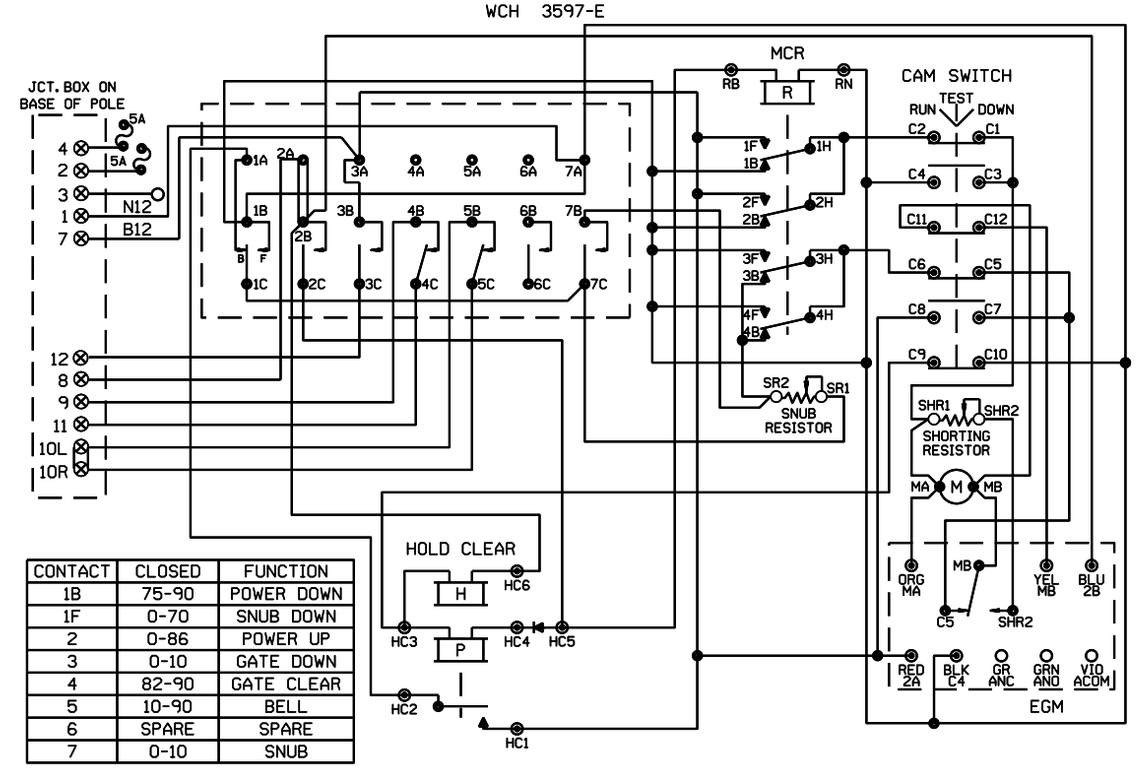

CONTACT	CLOSED	FUNCTION
1B	75-90	POWER DOWN
1F	0-70	SNUB DOWN
2	0-86	POWER UP
3	0-10	GATE DOWN
4	82-90	GATE CLEAR
5	10-90	BELL
6	SPARE	SPARE
7	0-10	SNUB

WCH 3597-RB

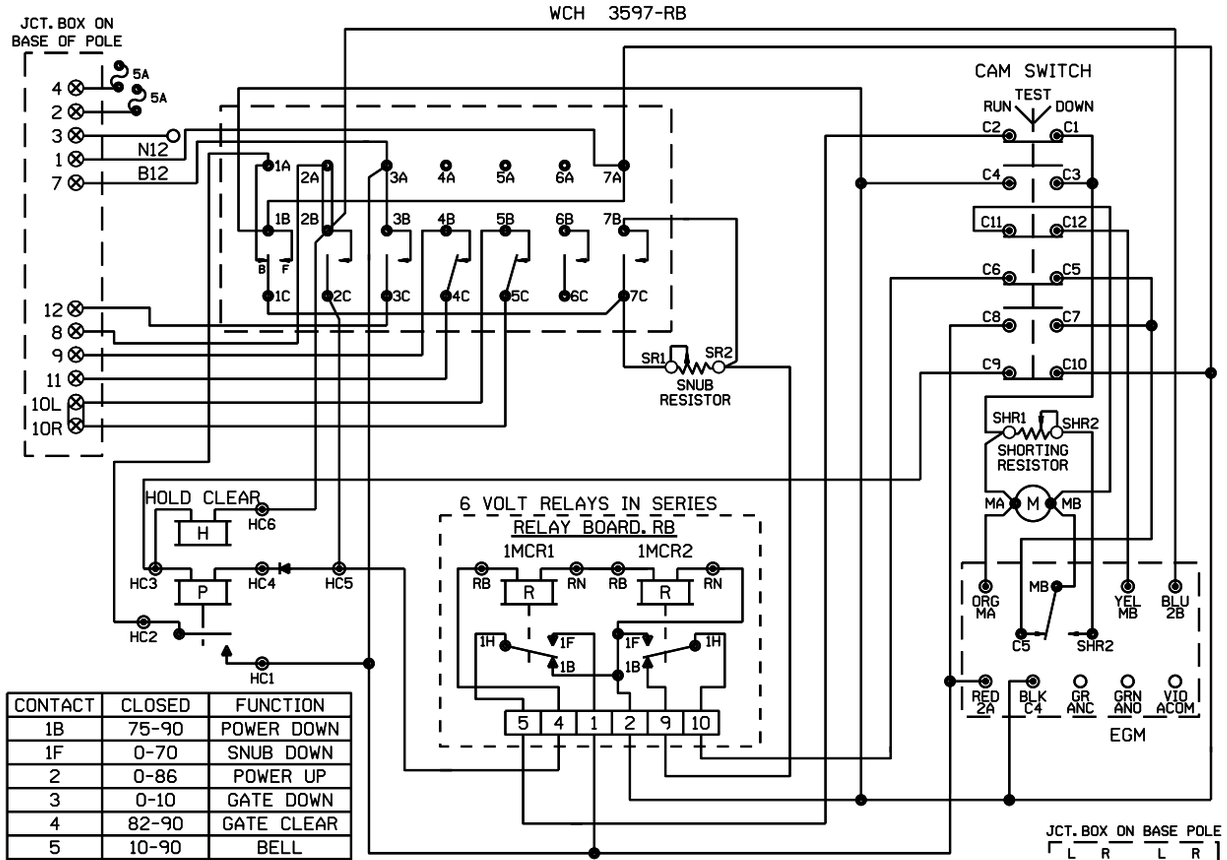

CONTACT	CLOSED	FUNCTION
1B	75-90	POWER DOWN
1F	0-70	SNUB DOWN
2	0-86	POWER UP
3	0-10	GATE DOWN
4	82-90	GATE CLEAR
5	10-90	BELL
6	SPARE	SPARE
7	0-10	SNUB

JCT. BOX ON BASE POLE

SHOW TYPE MECH. INSTALLED

ALL MECHANISMS SHOWN IN THE CLEAR POSITION

SAFETRAN S-60

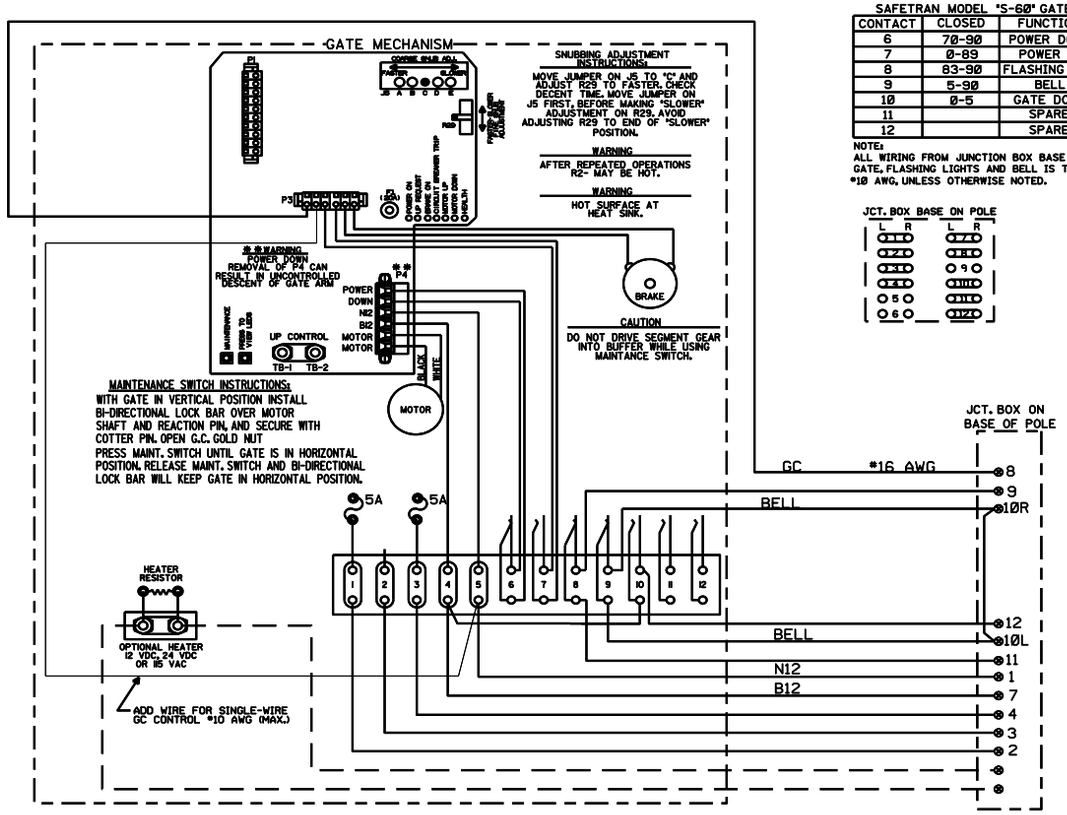

SAFETRAN MODEL "S-60" GATE

CONTACT	CLOSED	FUNCTION
6	70-90	POWER DOWN
7	0-89	POWER UP
8	83-90	FLASHING LGT.
9	5-90	BELL
10	0-5	GATE DOWN
11		SPARE
12		SPARE

NOTE: ALL WIRING FROM JUNCTION BOX BASE TO GATE, FLASHING LIGHTS AND BELL IS TO BE #10 AWG, UNLESS OTHERWISE NOTED.

JCT. BOX BASE ON POLE

NEW SHEET

Designed: 01/12/11

INSTALL FLASHERS AND GATES WITH CWT AT M.P. 183.66 TR 51

Rec#: WO#: 07265
IS: /TJD
/IRG/JTB

MODIFICATION LEVEL	
Q. A. LAST LEVEL CHECKED	DU
LAST LEVEL MOD THIS TYPICAL	DU
LAST LEVEL BY DESIGNER	DU
CHANGED FROM TYPICAL?	N

REV 01.24.11 4K GWIRING.7

UNION PACIFIC — QUALITY PRODUCTIVITY SAFETY — SIGNAL DESIGN

Date: 01/12/11
Des: IRG
Chk: TJD
AFE: 07265

UNION PACIFIC RAILROAD

FINDLAY, ILLINOIS
TR 51
PANA SUBDIVISION

Office of Sr AVP Engineering - Signal/TCO Omaha, Nebraska

Sh.: 6
DOT 166958J
MP: 183.66
ID: 030118366.6X

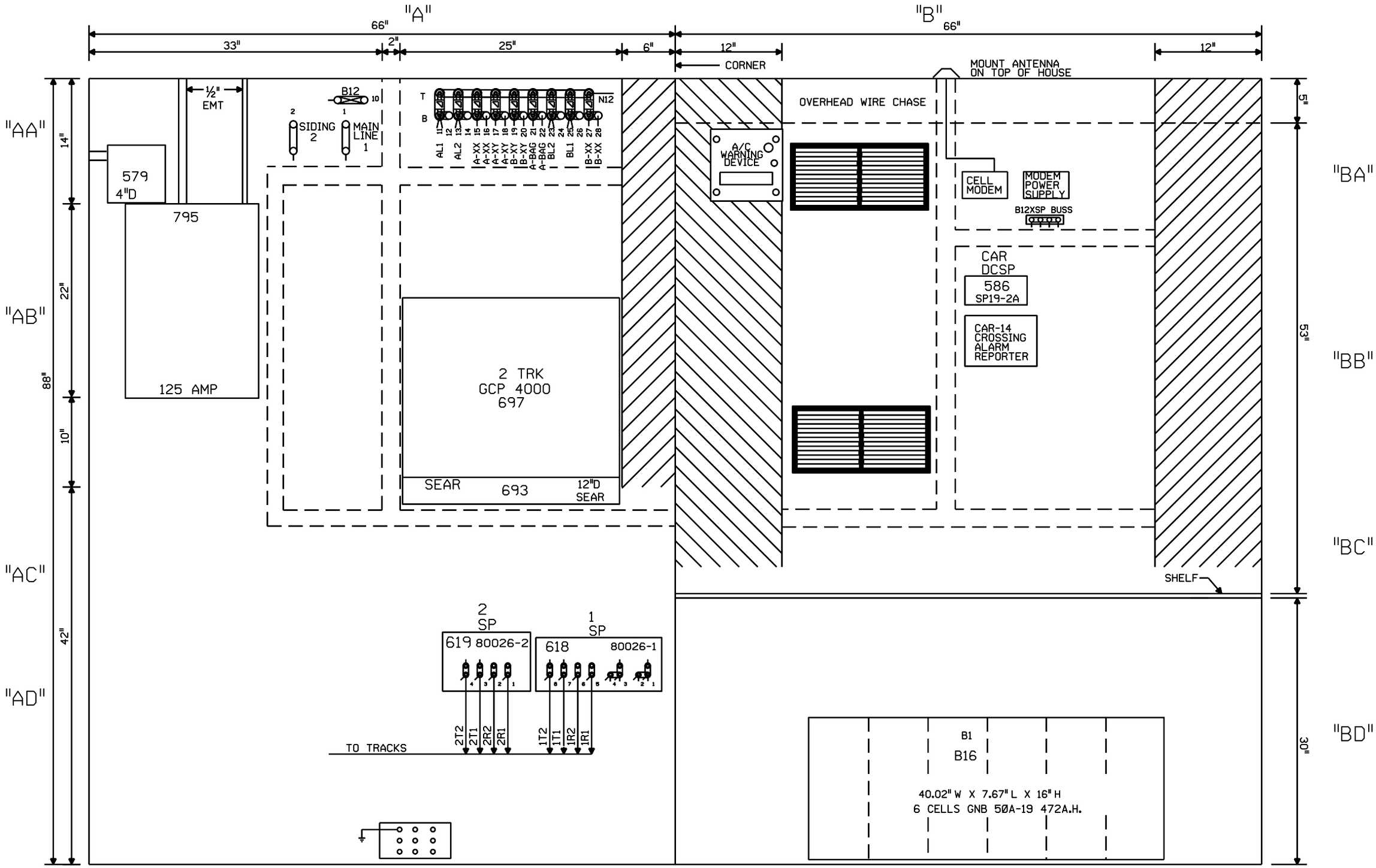

NOTE: ALL DIMENSIONS SHOWN ARE APPROXIMATE.

NEW SHEET

Designed: 01/12/11 INSTALL FLASHERS AND GATES WITH CWT AT M.P. 183.66 TR 51 Rec#: WO#: 07265 IS: /TJD / /IRG/JTB	MODIFICATION LEVEL		UNION PACIFIC QUALITY PRODUCTIVITY SAFETY SIGNAL DESIGN	Date: 01/12/11 Des: IRG Chk: TJD AFE: 07265	UNION PACIFIC RAILROAD FINDLAY, ILLINOIS TR 51 PANA SUBDIVISION Office of Sr AVP Engineering - Signal/TCO Omaha, Nebraska	Sh.: 7 DOT 166958J MP: 183.66 ID: 030118366.7X
	Q.A. LAST LEVEL CHECKED	DU				
	LAST LEVEL MOD THIS TYPICAL	DU				
	LAST LEVEL BY DESIGNER	DU				
	CHANGED FROM TYPICAL?	Y				
	REV 01.24.11 4K 4TKGFC.8					

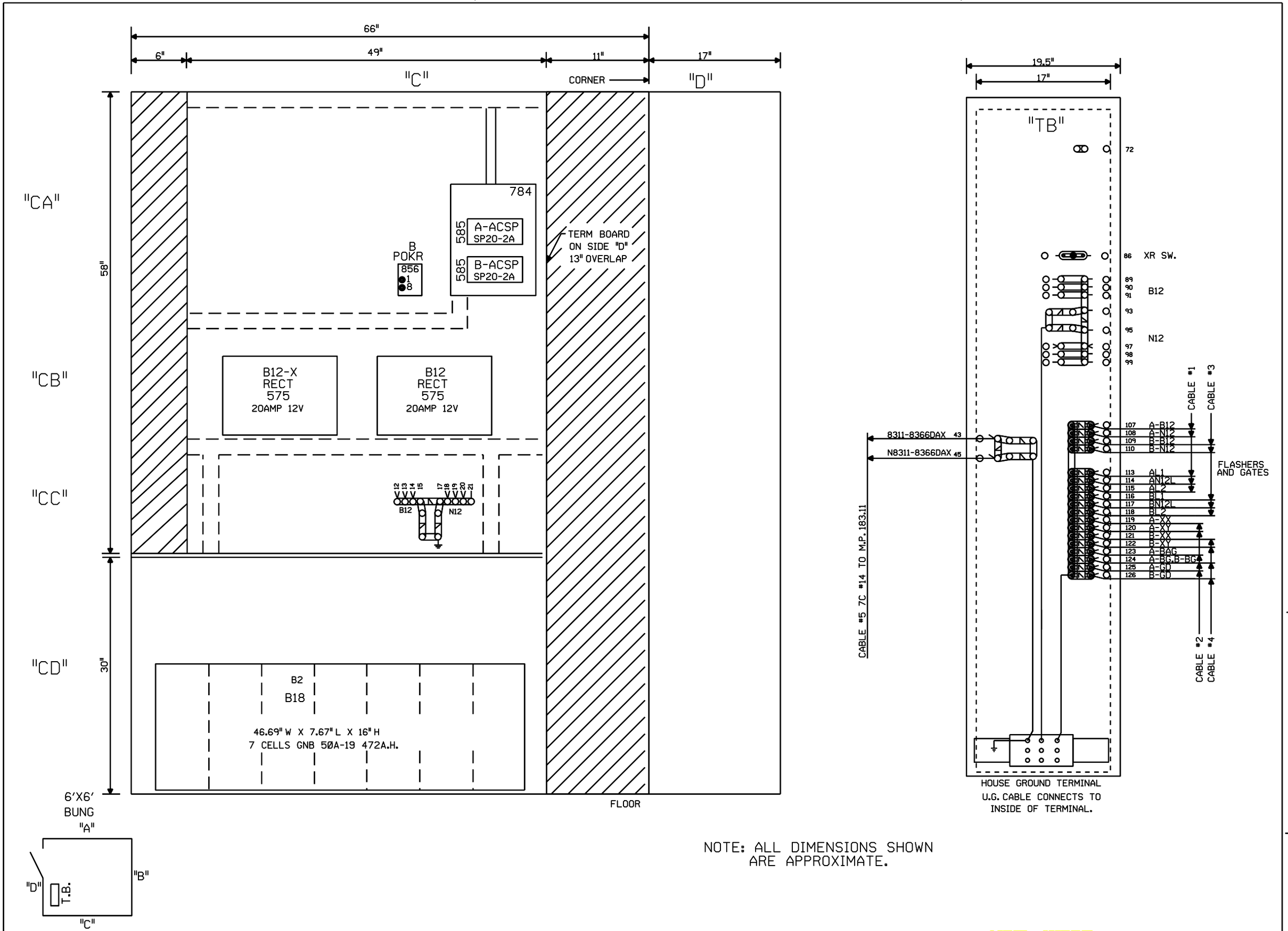

NOTE: ALL DIMENSIONS SHOWN
ARE APPROXIMATE.

NEW SHEET

Designed: 01/12/11 INSTALL FLASHERS AND GATES WITH CWT AT M.P. 183.66 TR 51 Rec#: WO#: 07265 IS: /TJD / /IRG/JTB	MODIFICATION LEVEL		UNION PACIFIC QUALITY PRODUCTIVITY SAFETY SIGNAL DESIGN	Date: 01/12/11 Des: IRG Chk: TJD AFE: 07265	UNION PACIFIC RAILROAD FINDLAY, ILLINOIS TR 51 PANA SUBDIVISION Office of Sr AVP Engineering - Signal/TCO Omaha, Nebraska	Sh.: 8 DOT 166958J MP: 183.66 ID: 030118366.8X
	Q. A. LAST LEVEL CHECKED	DU				
	LAST LEVEL MOD THIS TYPICAL	DU				
	LAST LEVEL BY DESIGNER	DU				
	CHANGED FROM TYPICAL?	Y				
	REV 01.24.11 4K GFC.9					

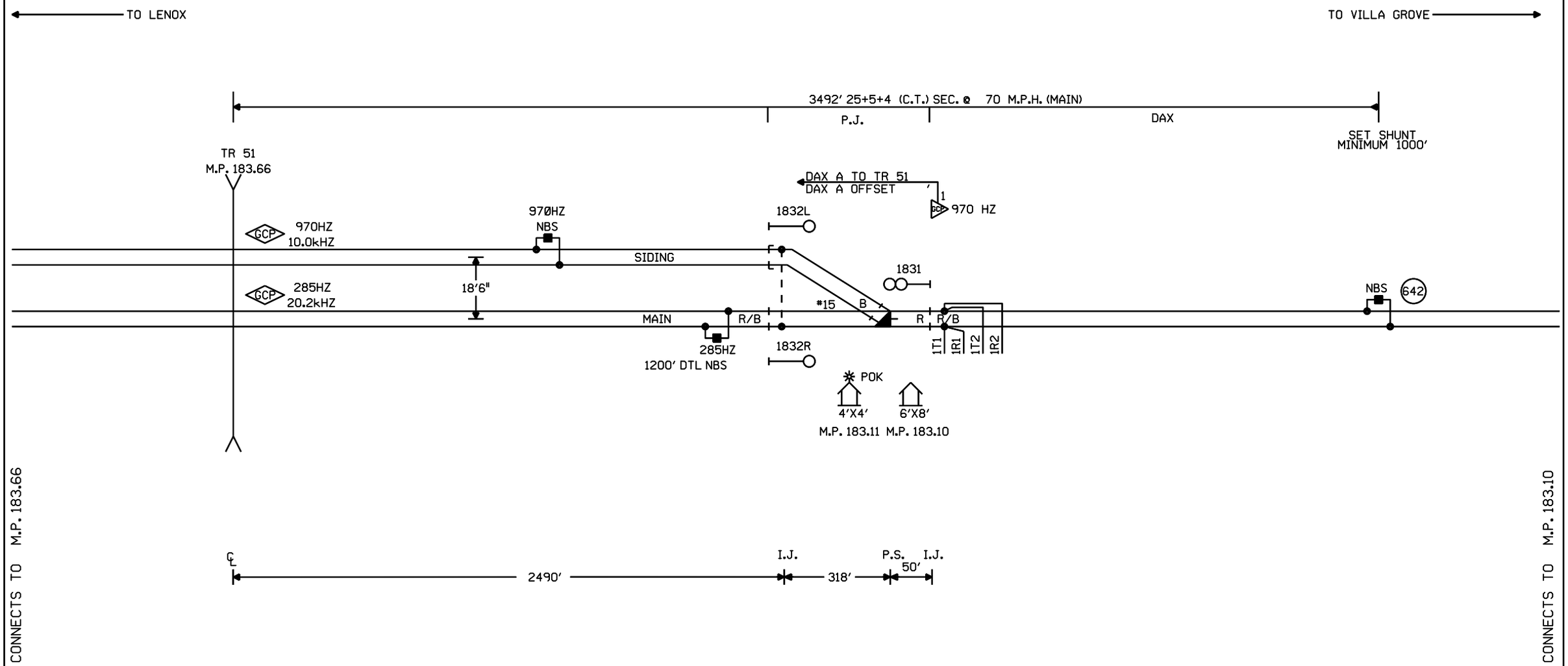

NOTES:

⊗ = TWISTED WIRES
ALL TRACK WIRES 2C. #6
INSULATED 1 TWIST PER FT.

TRANSMITTER AND RECEIVER LEADS TO BE SEPARATED BY AT LEAST 12" IN TRENCH, LENGTHS SHOULD NOT EXCEED MANUFACTURES RECOMMENDATION.

ALL BUNGALOW WIRING TO BE #16 AWG FLEX UNLESS OTHERWISE SPECIFIED EXCEPT ALL GROUND WIRE TO BE #6 AWG FLEX OR LARGER.

REFER TO UP STANDARD DWG. FOR BUNGALOW GROUNDING.

PORTABLE GENERATOR EXTENSION CORD FOR 240V TO 240V IS PROVIDED AS WELL AS A 120V TO 240V ADAPTER.

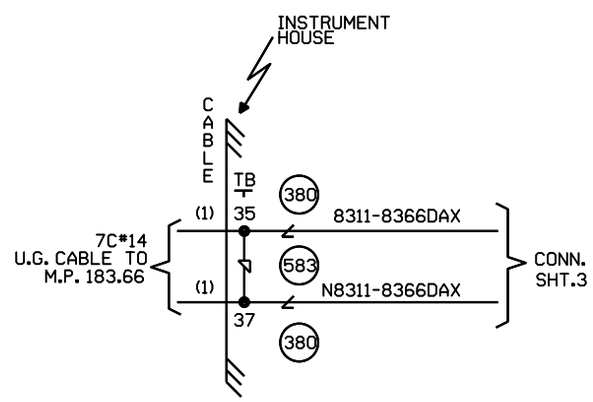

W(S) ←—○—→ E(N)

CABLE TABULATION

CABLE NO. 1 7C#14 U.G.B.T. HOUSE TO M.P. 183.66

NEW SHEET

					Designed: 01/12/11 INSTALL FLASHERS AND GATES WITH CWT AT M.P. 183.66 TR 51 Rec#: WO#: 07265 IS: /TJD / /IRG/JTB	MODIFICATION LEVEL Q. A. LAST LEVEL CHECKED DU LAST LEVEL MOD THIS TYPICAL DU LAST LEVEL BY DESIGNER DU CHANGED FROM TYPICAL? Y REV 01.24.11 4K REMOTE.1	UNION PACIFIC QUALITY PRODUCTIVITY SAFETY SIGNAL DESIGN	Date: 01/12/11 Des: IRG Chk: TJD AFE: 07265	UNION PACIFIC RAILROAD FINDLAY, ILLINOIS REMOTE LOCATION PANA SUBDIVISION Office of Sr AVP Engineering - Signal/TCO Omaha, Nebraska	Sh.: 1 DOT 000000R MP: 183.11 ID: 030118311.1X

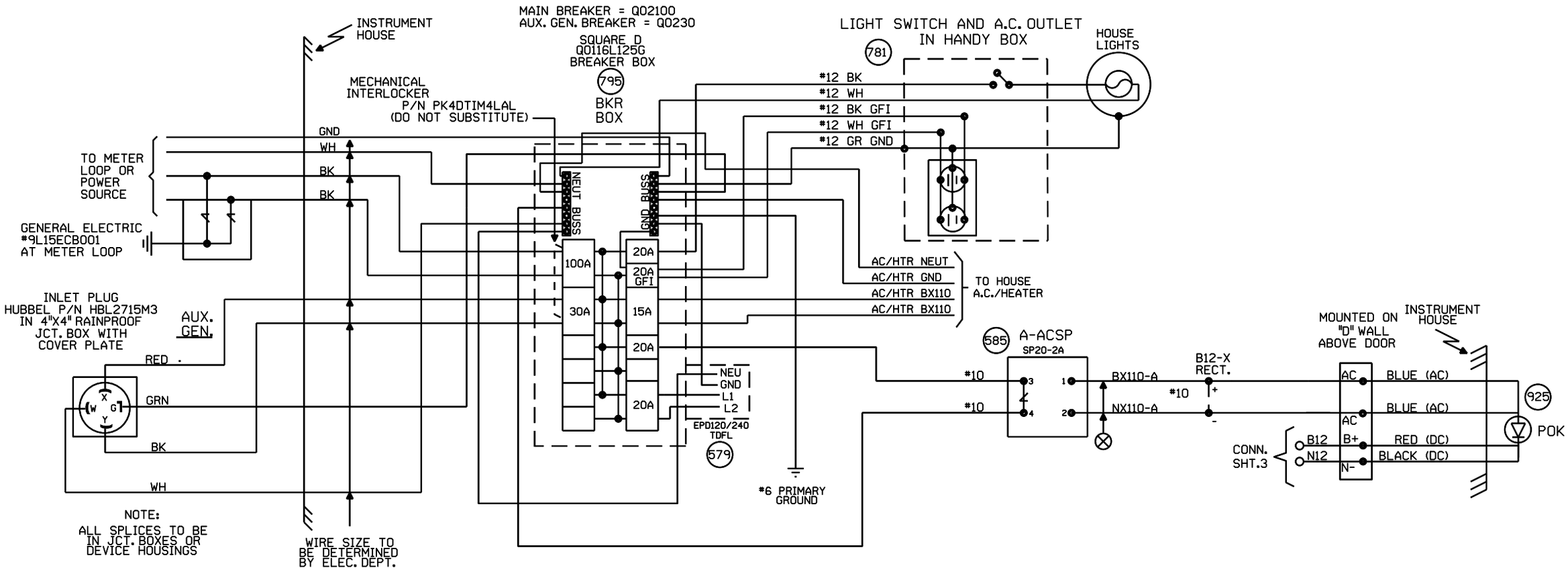

NEW SHEET

					Designed: 01/12/11 INSTALL FLASHERS AND GATES WITH CWT AT M.P. 183.66 TR 51 Rec#: WO#: 07265 IS: /TJD / /IRG/JTB	MODIFICATION LEVEL		UNION PACIFIC QUALITY PRODUCTIVITY SAFETY SIGNAL DESIGN	Date: 01/12/11 Des: IRG Chk: TJD AFE: 07265	UNION PACIFIC RAILROAD FINDLAY, ILLINOIS REMOTE LOCATION PANA SUBDIVISION Office of Sr AVP Engineering - Signal/TCO Omaha, Nebraska	Sh.: 2 DOT 000000R MP: 183.11 ID: 030118311.2X
						Q.A. LAST LEVEL CHECKED	DU				
						LAST LEVEL MOD THIS TYPICAL	DU				
						LAST LEVEL BY DESIGNER	DU				
						CHANGED FROM TYPICAL? REV 01.24.11 4K SEARAC.2	Y				

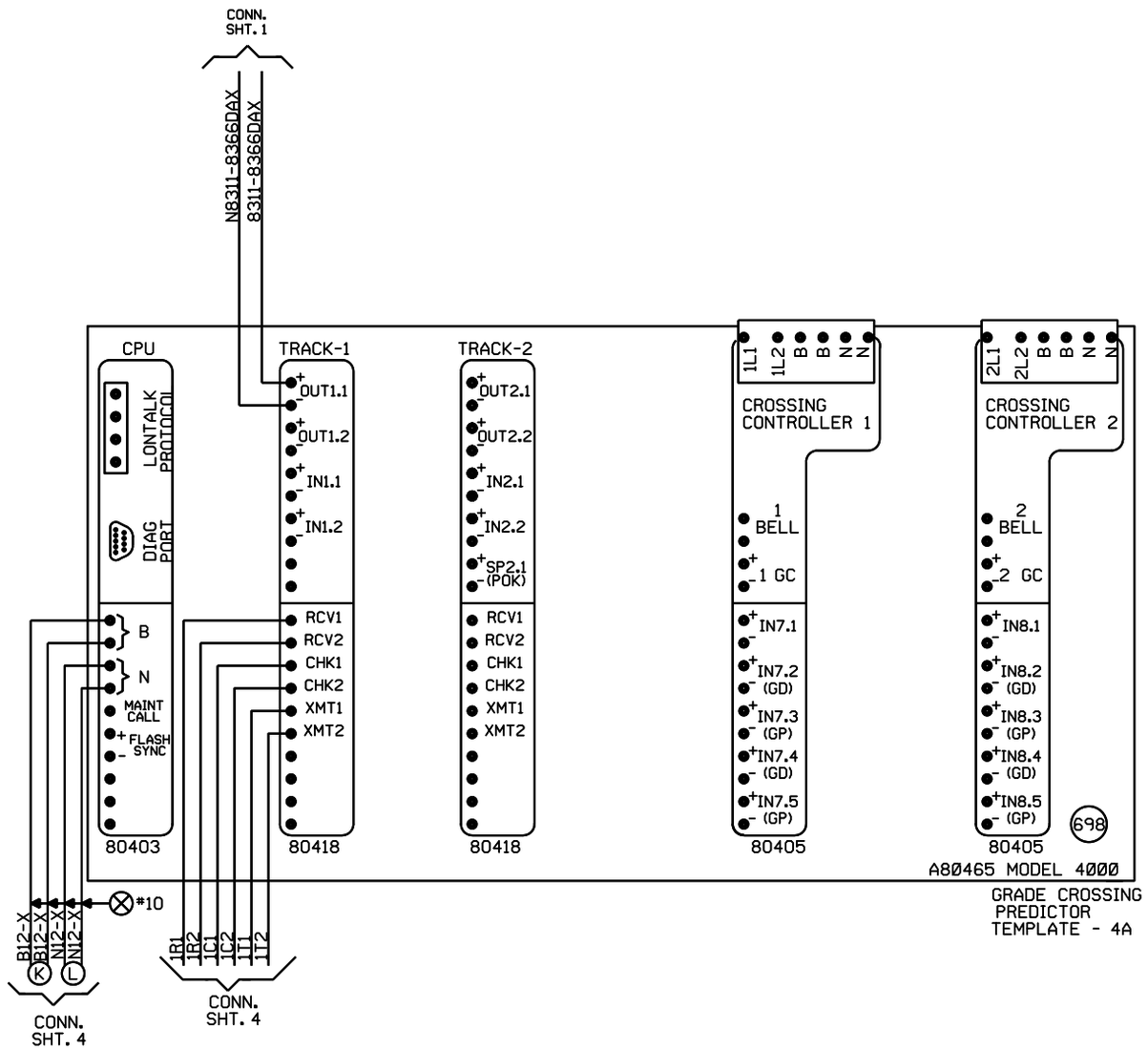

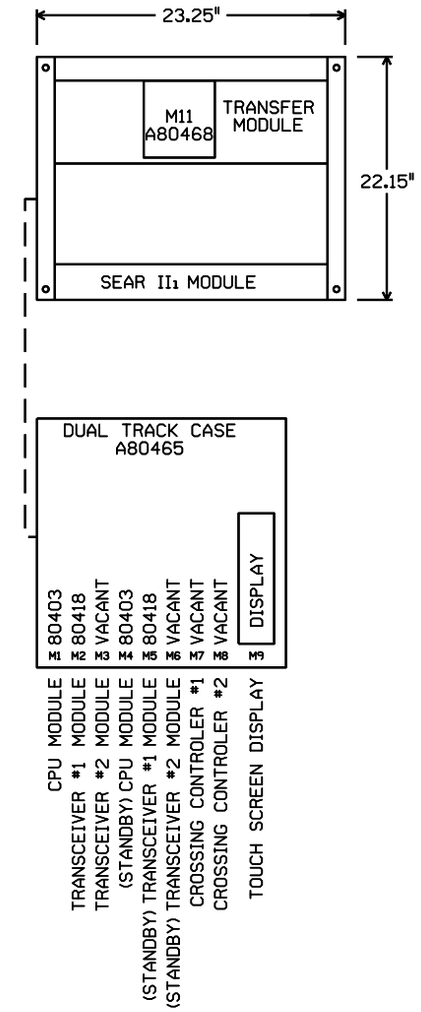

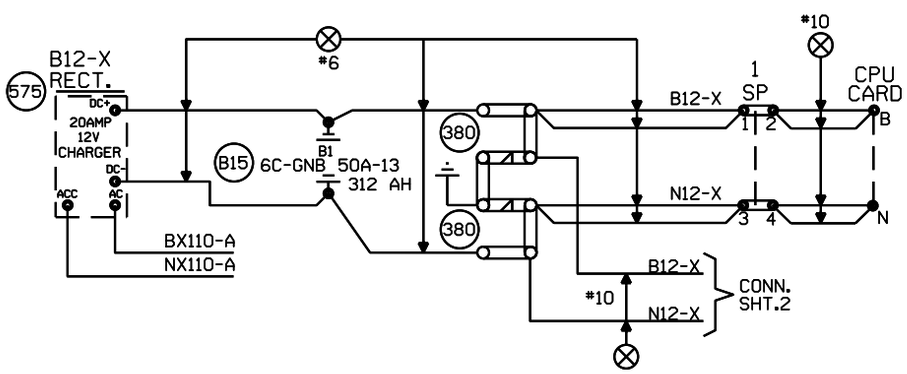

"Mf" FREQUENCY (HZ)	MAXIMUM TRANSMIT WIRE LENGTH (FEET)
86	100
114	125
156	150
211	200
285-970	250

NOTE:

EACH TRANSMITTER TO RAIL WIRE FROM XMT1 AND XMT2 MUST NOT EXCEED THE MAXIMUM LENGTH SPECIFIED IN THE TABLE SHOWN. THE RECEIVER WIRE LENGTH IS NOT CRITICAL. DOES NOT APPLY TO 6 TRACK WIRE APPLICATION.

NEW SHEET

Designed: 01/12/11

INSTALL FLASHERS AND GATES WITH CWT AT M.P. 183.66 TR 51

Rec#: WO#: 07265 /TJD

IS: / /IRG/JTB

MODIFICATION LEVEL	
Q. A. LAST LEVEL CHECKED	DU
LAST LEVEL MOD THIS TYPICAL	DU
LAST LEVEL BY DESIGNER	DU
CHANGED FROM TYPICAL?	Y

REV 01.24.11 4K 2TKGF.3

UNION PACIFIC

QUALITY PRODUCTIVITY SAFETY

SIGNAL DESIGN

Date: 01/12/11

Des: IRG

Chk: TJD

AFE: 07265

UNION PACIFIC RAILROAD

FINDLAY, ILLINOIS
REMOTE LOCATION
PANA SUBDIVISION

Office of Sr AVP Engineering - Signal/TCO Omaha, Nebraska

Sh.: 3

DOT 000000R

MP: 183.11

ID: 030118311.3X

Minimum Program Steps Report

Location and SIN

DOT Number: 000000R
Milepost Number: 183.11
Site Name: FINDLAY, IL

SIN: 762010010016 *

* Parameter is part of office check number calculation.

MCF and Template Selection

MCF Name: GCP-T6X-02-1.mcf
MCF Revision: 021
MCFCRC: 6076E435

Template = 4A:6 Remotes *

* Parameter is part of office check number calculation.

Minimum Program Steps

TEMPLATE: track 1-Remote Dax
Track 1 : GCP Frequency = 970 Hz
Track 1 : Approach Distance = 1000 ft
Track 1 : Dax A Warning Time = 29 sec
Track 1 : Dax A Offset Distance = 2785 ft
Track 1 : GCP Transmit Level = Medium (Set in Field)

TEMPLATE: OP assignment 1
OUT 1.1 = T1 Dax A *

ADVANCED: site options
Daylight Savings = On *

* Parameter is part of office check number calculation.

Check Numbers

Office Check No. (DT 4.6.0): 314CEA2B
Office Check Number: 314CEA2B
Config. Check Number: 5F4DBA1E
(Based on MCF Revision 021)

Parameters not part of office check number calculation:

Track 1 : GCP Frequency = 970 Hz
Track 1 : Approach Distance = 1000 ft
Track 1 : Dax A Warning Time = 29 sec
Track 1 : Dax A Offset Distance = 2785 ft
Track 1 : GCP Transmit Level = Medium (Set in Field)

Comments

<none>

Configuration Package File

Filename: 030118311_000000R.pac
Path: C:\cad_file\uprr\jxxd01736\
Date/Time: 2716/2011 15:31:55
DT Version: 4.8.5

NEW SHEET

				Designed: 01/12/11 INSTALL FLASHERS AND GATES WITH CWT AT M.P. 183.66 TR 51 Rec#: WO#: 07265 IS: /TJD / /IRG /JTB	**NOTE: Actual OFFSET and ISLAND distances must be verified by field personnel.**	UNION PACIFIC QUALITY PRODUCTIVITY SAFETY SIGNAL DESIGN	Date: 01/12/11 Des: IRG Chk: TJD AFE: 07265	**UNION PACIFIC RAILROAD** FINDLAY, ILLINOIS REMOTE LOCATION PANA SUBDIVISION Office of Sr AVP Engineering - Signal/TCO Omaha, Nebraska	Sh.: 3A DOT 000000R MP: 183.11 ID: 030118311.3AX

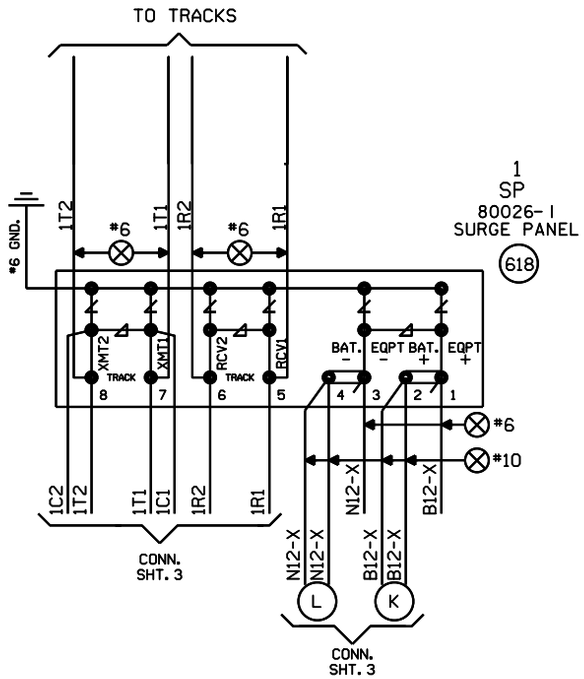

NEW SHEET

					Designed: 01/12/11 INSTALL FLASHERS AND GATES WITH CWT AT M.P. 183.66 TR 51 Rec#: WO#: 07265 IS: /TJD / /IRG/JTB	MODIFICATION LEVEL		UNION PACIFIC QUALITY PRODUCTIVITY SAFETY SIGNAL DESIGN	Date: 01/12/11 Des: IRG Chk: TJD AFE: 07265	UNION PACIFIC RAILROAD FINDLAY, ILLINOIS REMOTE LOCATION PANA SUBDIVISION Office of Sr AVP Engineering - Signal/TCO Omaha, Nebraska	Sh.: 4 DOT 000000R MP: 183.11 ID: 030118311.4X
						Q.A. LAST LEVEL CHECKED	DU				
						LAST LEVEL MOD THIS TYPICAL	DU				
						LAST LEVEL BY DESIGNER	DU				
						CHANGED FROM TYPICAL? REV 01.24.11 4K REMOTE.4	Y				

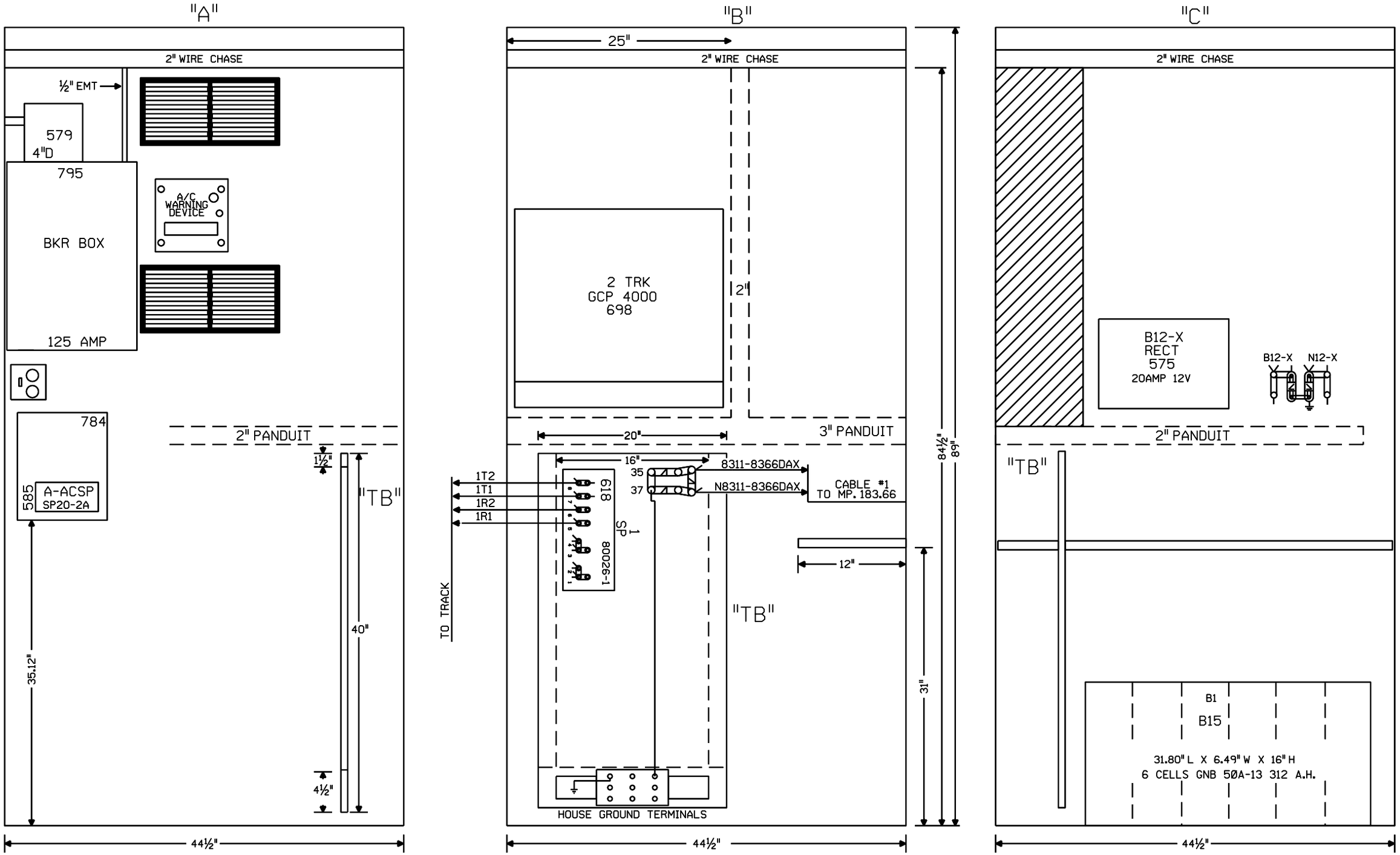

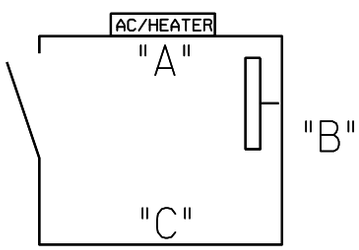

NOTE: ALL DIMENSIONS SHOWN ARE APPROXIMATE.

NEW SHEET

Designed: 01/12/11

INSTALL FLASHERS AND GATES WITH CWT AT M.P. 183.66 TR 51

Rec#: WO#: 07265 /TJD
IS: / /IRG/JTB

MODIFICATION LEVEL	
O. A. LAST LEVEL CHECKED	DU
LAST LEVEL MOD THIS TYPICAL	DU
LAST LEVEL BY DESIGNER	DU
CHANGED FROM TYPICAL?	Y
rev 01.24.11 4K REMOTE.5	

UNION PACIFIC
QUALITY PRODUCTIVITY SAFETY
SIGNAL DESIGN

Date: 01/12/11
Des: IRG
Chk: TJD
AFE: 07265

UNION PACIFIC RAILROAD

FINDLAY, ILLINOIS
REMOTE LOCATION
PANA SUBDIVISION

Office of Sr AVP Engineering - Signal/TCO Omaha, Nebraska

Sh.: 5
DOT 000000R
MP: 183.11
ID: 030118311.5X

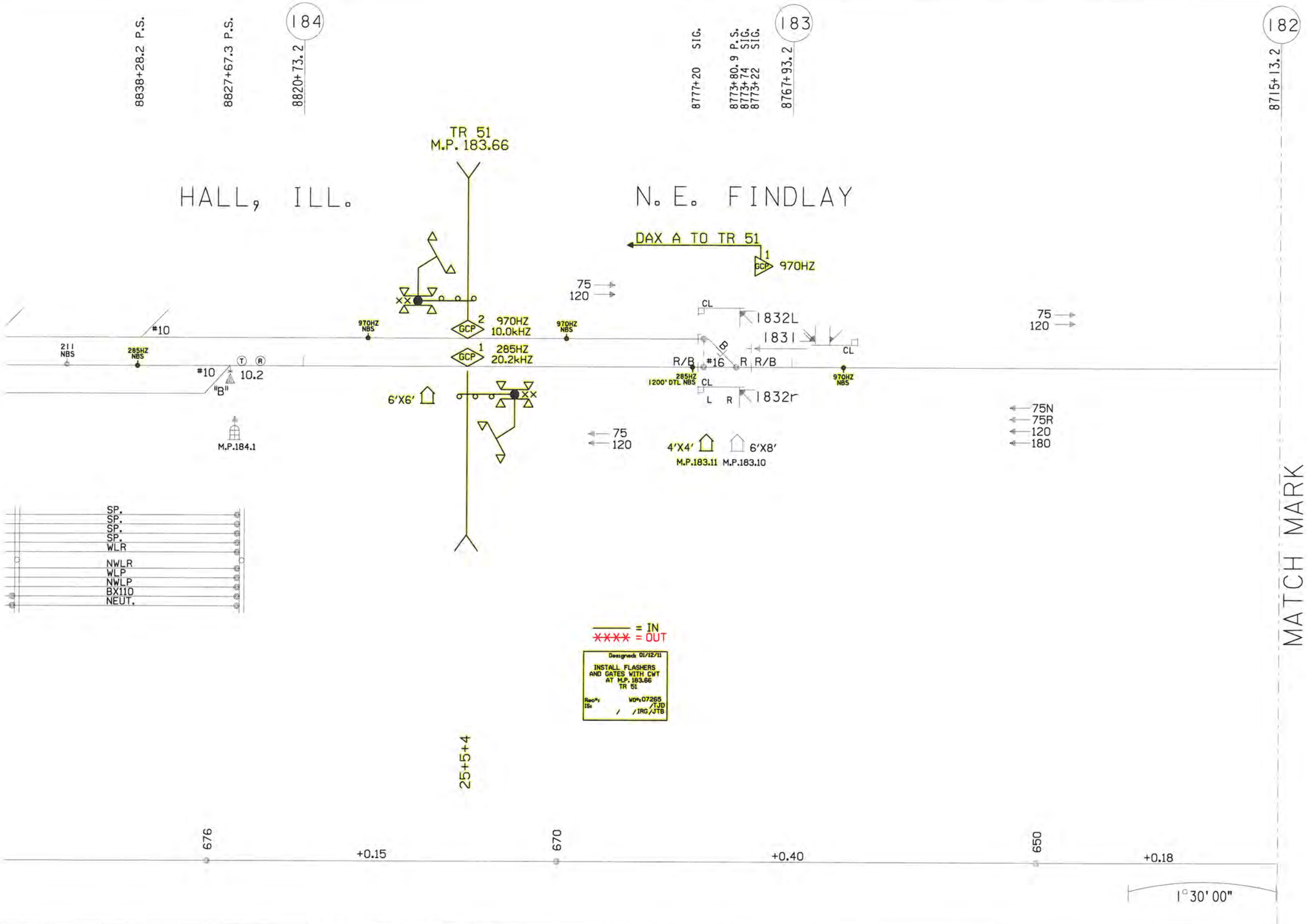
8838+28.2 P.S.
8827+67.3 P.S.
184
8820+73.2
8777+20 SIG.
8773+80.9 P.S.
8773+74 SIG.
8773+22 SIG.
183
8767+93.2
182
8715+13.2
TR 51
M.P. 183.66
HALL, ILL.
N. E. FINDLAY
DAX A TO TR 51
GCP 1 970HZ
75
120
CL
1832L
1831
CL
970HZ NBS
970HZ NBS
GCP 2 970HZ 10.0kHZ
GCP 1 285HZ 20.2kHZ
#10
211 NBS
285HZ NBS
#10
10.2
"B"
R/B
#16
R R/B
285HZ 1200' DTL NBS
CL
L R
1832r
970HZ NBS
6'X6'
75
120
4'X4'
6'X8'
M.P.184.1
M.P.183.11
M.P.183.10
75N
75R
120
180
MATCH MARK
SP.
SP.
SP.
SP.
WLR
NWLR
WLP
NWLP
BX110
NEUT.
= IN
= OUT
Designed 01/12/11
INSTALL FLASHERS
AND GATES WITH CWT
AT M.P. 183.66
TR 51
Rec'd:
WO#:07265
/TJD
/ /IRG/JTB
25+5+4
676
+0.15
670
+0.40
650
+0.18
1°30'00"