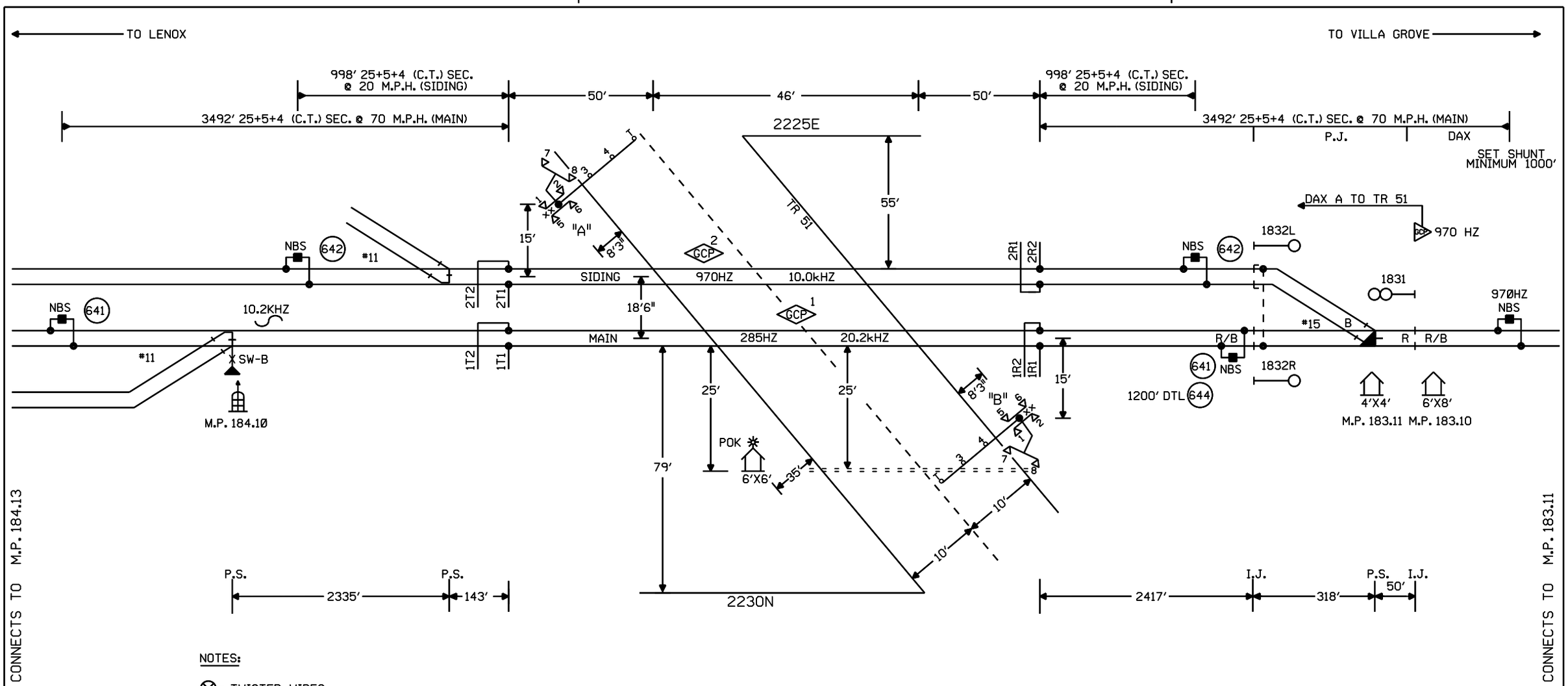

NOTES:

⊗ = TWISTED WIRES
INSULATED 1 TWIST PER FT.
ALL TRACK WIRES 2C. #6

TRANSMITTER AND RECEIVER LEADS TO BE SEPARATED BY AT LEAST 12" IN TRENCH, LENGTHS SHOULD NOT EXCEED MANUFACTURES RECOMMENDATION.

TOP OF FOUNDATION TO BE AT SAME ELEVATION AS THE SURFACE OF THE TRAVELED WAY & NO MORE THAN 4" ABOVE THE SURFACE OF THE GROUND.

ALL BUNGALOW WIRING TO BE #16 AWG FLEX UNLESS OTHERWISE SPECIFIED EXCEPT ALL GROUND WIRE TO BE #6 AWG FLEX OR LARGER.

ALL WIRING IN GATE MECHANISM TO BE #10 "AWG FLEX".

REFER TO UP STANDARD DWG FOR BUNGALOW GROUNDING.

PORTABLE GENERATOR EXTENSION CORD FOR 240V TO 240V IS PROVIDED AS WELL AS A 120V TO 240V ADAPTER.

ALL LIGHTS TO BE 12" ROUNDELS.

= = = = = = 4" X 60' CONDUIT

LIGHTS: LED LIGHTS

GATE A: 18'
GATE B: 18'

xx = BELL

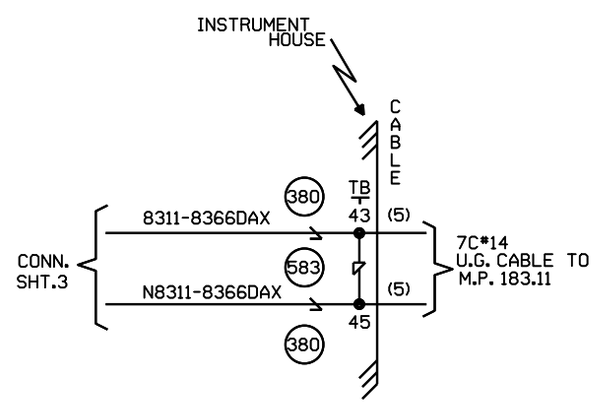

CONSTRUCTION NOTES

1. ELECTRIC LOCK AT M.P. 184.13 HAS A TRACK SHUNT THAT WILL NEED TO BE REMOVED.
2. RELOCATE POWER LINES FOR CLEARANCE.

W(S) ← → E(N)

CABLE TABULATION

CABLE NO. 5 7C#14 U.G.B.T. HOUSE TO M.P. 183.11

NEW SHEET

Designed: 01/12/11

INSTALL FLASHERS AND GATES WITH CWT AT M.P. 183.66 TR 51

Rec#: WO#: 07265
IS: /TJD
/IRG /JTB

MODIFICATION LEVEL	
Q. A. LAST LEVEL CHECKED	DU
LAST LEVEL MOD THIS TYPICAL	DU
LAST LEVEL BY DESIGNER	DU
CHANGED FROM TYPICAL?	Y

REV 01.24.11 4K 2TKUGTYP.1

UNION PACIFIC
QUALITY PRODUCTIVITY SAFETY
SIGNAL DESIGN

Date: 01/12/11
Des: IRG
Chk: TJD
AFE: 07265

UNION PACIFIC RAILROAD

FINDLAY, ILLINOIS
TR 51
PANA SUBDIVISION

Office of Sr AVP Engineering - Signal/TCO Omaha, Nebraska

Sh.: 1
DOT 166958J
MP: 183.66
ID: 030118366.1X

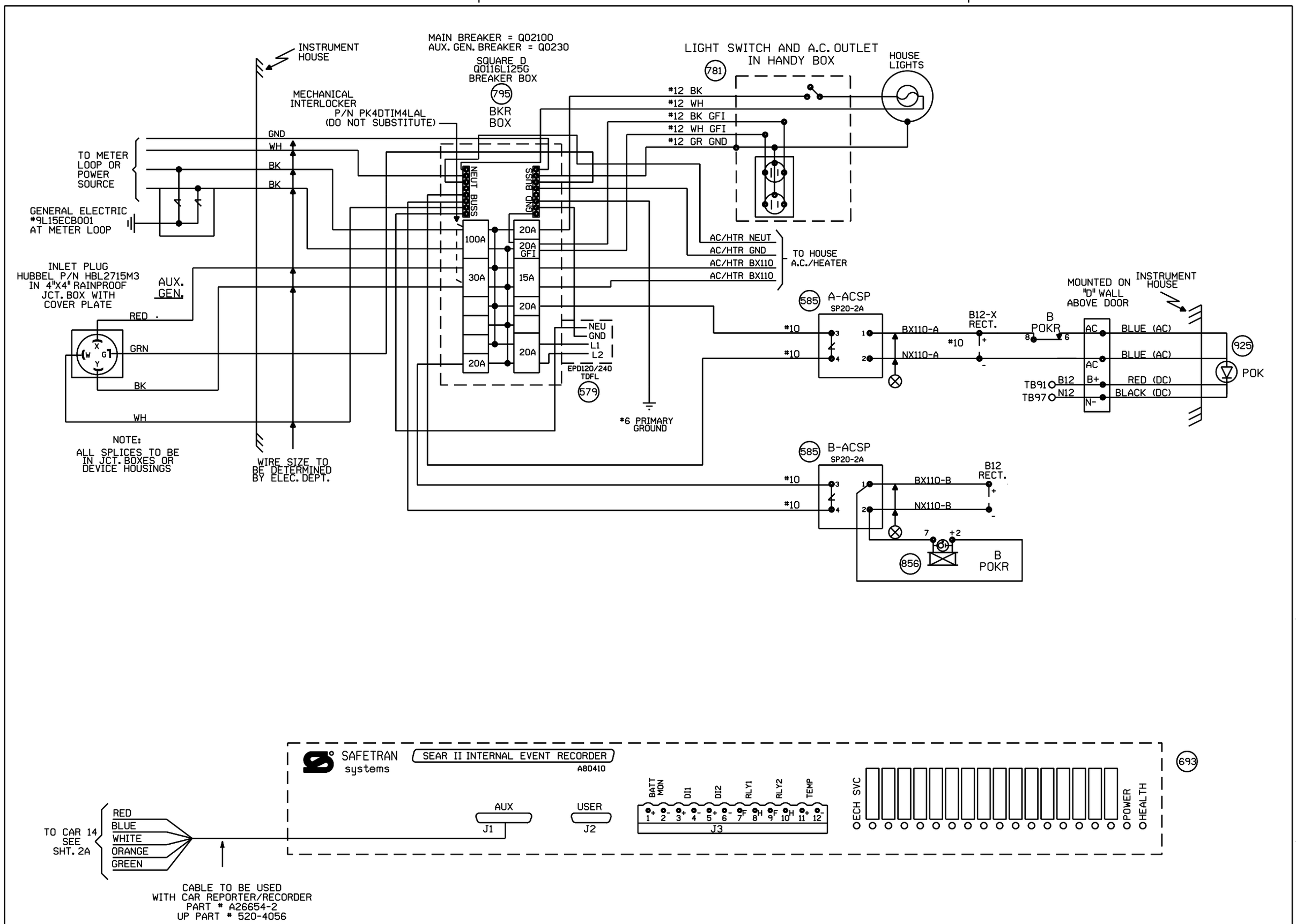

NEW SHEET

					Designed: 01/12/11	MODIFICATION LEVEL		UNION PACIFIC	Date: 01/12/11	UNION PACIFIC RAILROAD	Sh.: 2
					INSTALL FLASHERS AND GATES WITH CWT AT M.P. 183.66 TR 51	Q. A. LAST LEVEL CHECKED	DU	QUALITY PRODUCTIVITY SAFETY	Des: IRG	FINDLAY, ILLINOIS	DOT 166958J
						LAST LEVEL MOD THIS TYPICAL	DU		Chk: TJD	TR 51	MP: 183.66
						LAST LEVEL BY DESIGNER	DU			PANA SUBDIVISION	
					Rec#: 1S: WO#: 07265 /TJD /IRG /JTB	CHANGED FROM TYPICAL?	Y	SIGNAL DESIGN	AFE: 07265	Office of Sr AVP Engineering - Signal/TCO Omaha, Nebraska	ID: 030118366.2X
						REV 01.24.11 4K SEARAC.2					

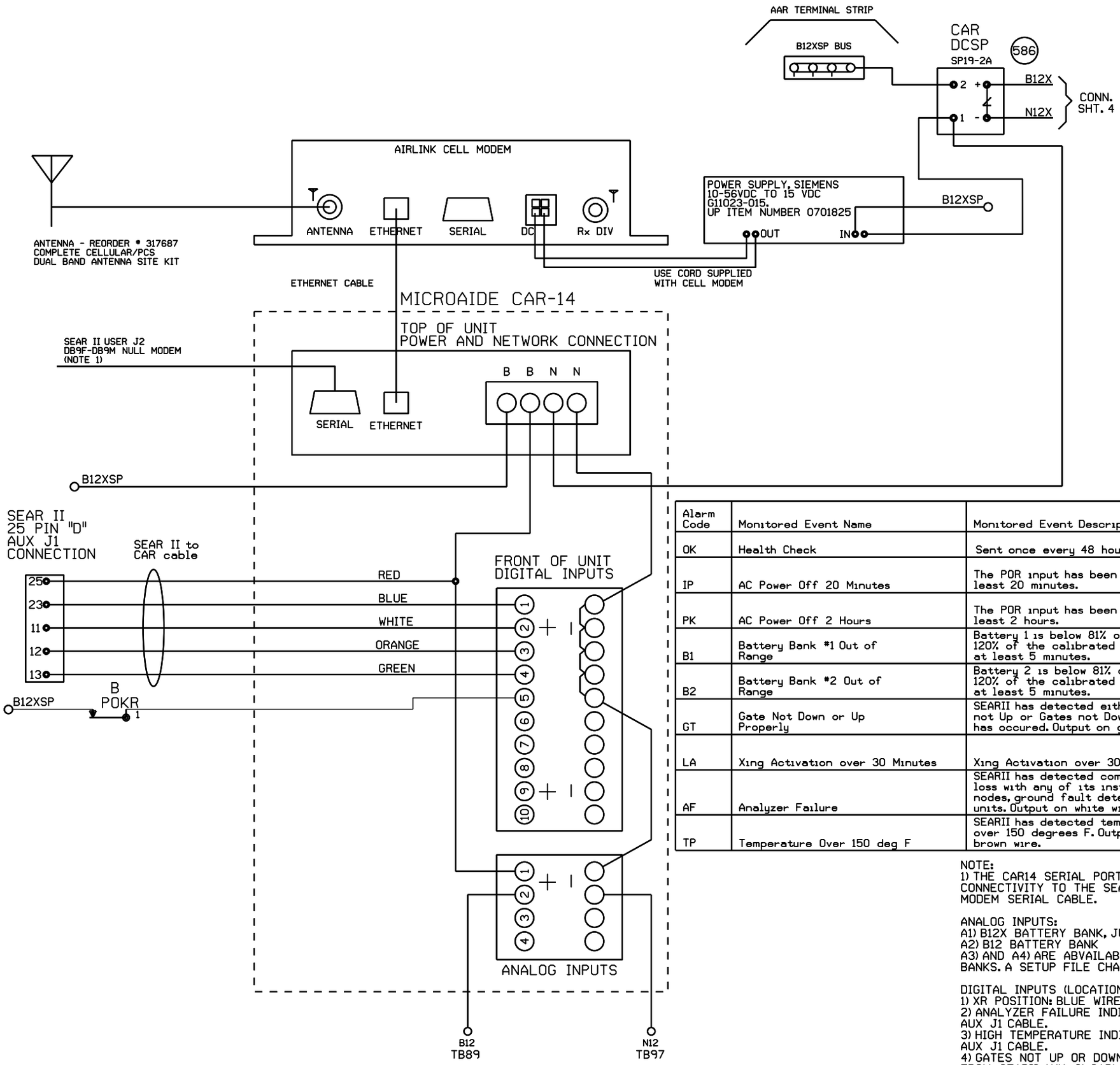

Alarm Code	Monitored Event Name	Monitored Event Description	Alarm Cleared
OK	Health Check	Sent once every 48 hours.	
IP	AC Power Off 20 Minutes	The POR input has been down for at least 20 minutes.	The POR input comes back on for at least 5 minutes after an AC Power Off Alarm
PK	AC Power Off 2 Hours	The POR input has been down for at least 2 hours.	The POR input comes back on for at least 5 minutes after an AC Power Off Alarm
B1	Battery Bank #1 Out of Range	Battery 1 is below 81% or above 120% of the calibrated value for at least 5 minutes.	Battery 1 is within acceptable range for at least 5 minutes.
B2	Battery Bank #2 Out of Range	Battery 2 is below 81% or above 120% of the calibrated value for at least 5 minutes.	Battery 2 is within acceptable range for at least 5 minutes.
GT	Gate Not Down or Up Properly	SEARII has detected either a Gates not Up or Gates not Down alarm has occured. Output on green wire.	The Gate Up or Gates Down indications indicated true after a Gate Not Down or Gate Not Up alarm was triggered.
LA	Xing Activation over 30 Minutes	Xing Activation over 30 Minutes	Crossing has recovered after a Long Activation Alarm had occured.
AF	Analyzer Failure	SEARII has detected communication loss with any of its installed echelon nodes, ground fault detectors, or TSS units. Output on white wire.	Analyzer has recovered after an analyzer failure.
TP	Temperature Over 150 deg F	SEARII has detected temperature over 150 degrees F. Output on brown wire.	Temperature sensor inside SEAR detects temperature is OK after a Hi-Temp alarm.

NOTE:
1) THE CAR14 SERIAL PORT IS VAILABLE TO ADD REMOTE CONNECTIVITY TO THE SEARII. USE A DB9F TO DB9M NULL MODEM SERIAL CABLE.

ANALOG INPUTS:
A1) B12X BATTERY BANK, JUMPERED FOR CAR14 POWER INPUTS
A2) B12 BATTERY BANK
A3) AND A4) ARE ABVAILABLE TO MONITOR ADDITIONAL BATTERY BANKS. A SETUP FILE CHANGE IS REQUIRED.

DIGITAL INPUTS (LOCATIONS WITH SEARII)
1) XR POSITION: BLUE WIRE FROM SEARII AUX J1 CABLE
2) ANALYZER FAILURE INDICATION: WHITE WIRE FROM SEARII AUX J1 CABLE.
3) HIGH TEMPERATURE INDICATION: ORANGE WIRE FROM SEARII AUX J1 CABLE.
4) GATES NOT UP OR DOWN PROPERLY INDICATION: GREEN WIRE FROM SEARII AUX J1 CABLE.
5) POWER OFF INDICATION: POR

NEW SHEET

Designed: 01/12/11
INSTALL FLASHERS AND GATES WITH CWT AT M.P. 183.66 TR 51
Rec#: WO#: 07265
IS: /TJD
/IRG/JTB

MODIFICATION LEVEL	
Q. A. LAST LEVEL CHECKED	DU
LAST LEVEL MOD THIS TYPICAL	DU
LAST LEVEL BY DESIGNER	DU
CHANGED FROM TYPICAL?	Y

rev 01.24.11 4K ACDCCAR14SII.3

UNION PACIFIC
QUALITY PRODUCTIVITY SAFETY
SIGNAL DESIGN

Date: 01/12/11
Des: IRG
Chk: TJD
AFE: 07265

UNION PACIFIC RAILROAD
FINDLAY, ILLINOIS
TR 51
PANA SUBDIVISION
Office of Sr AVP Engineering - Signal/TCO Omaha, Nebraska

Sh.: 2A
DOT 166958J
MP: 183.66
ID: 030118366.2AX

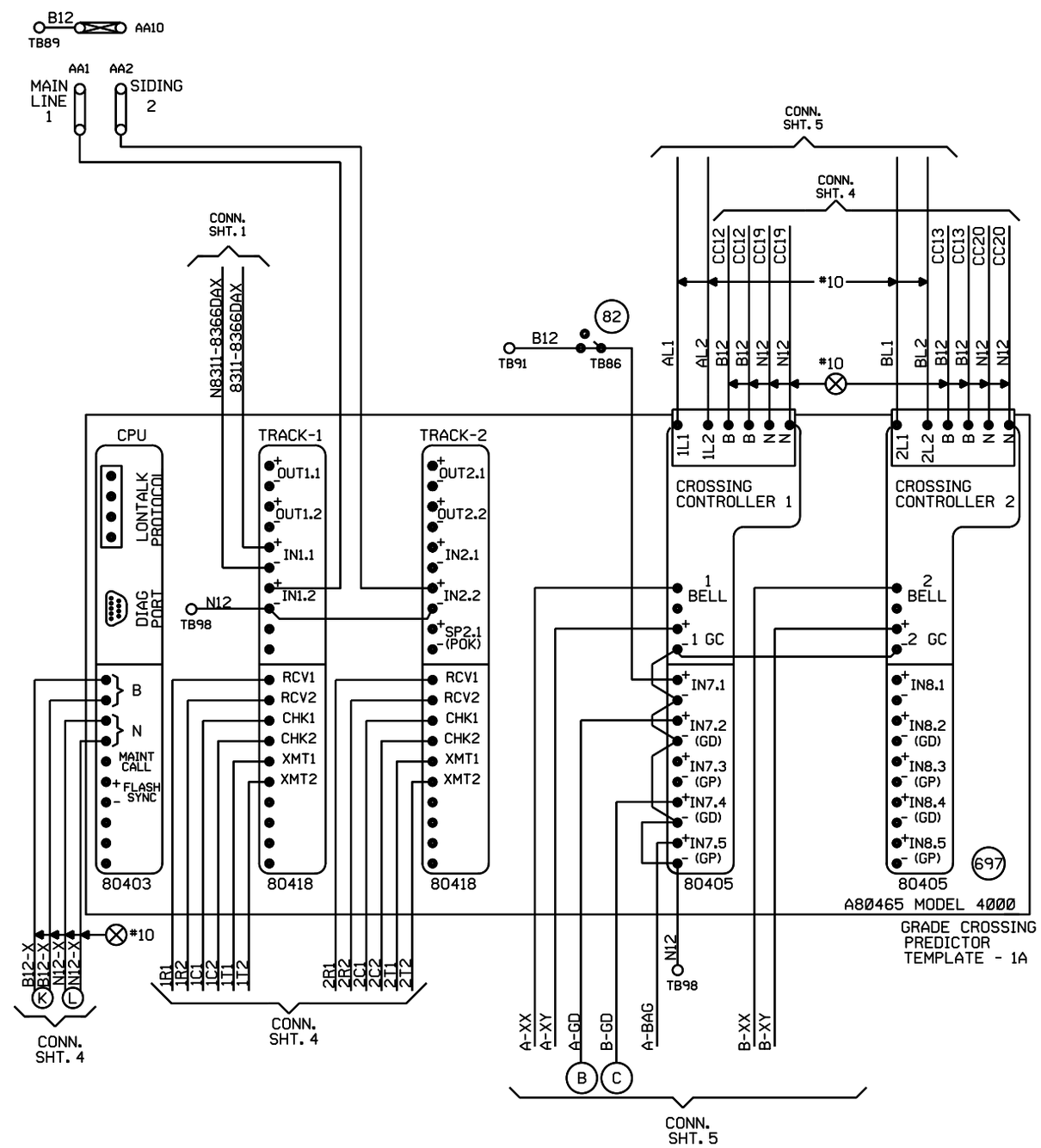

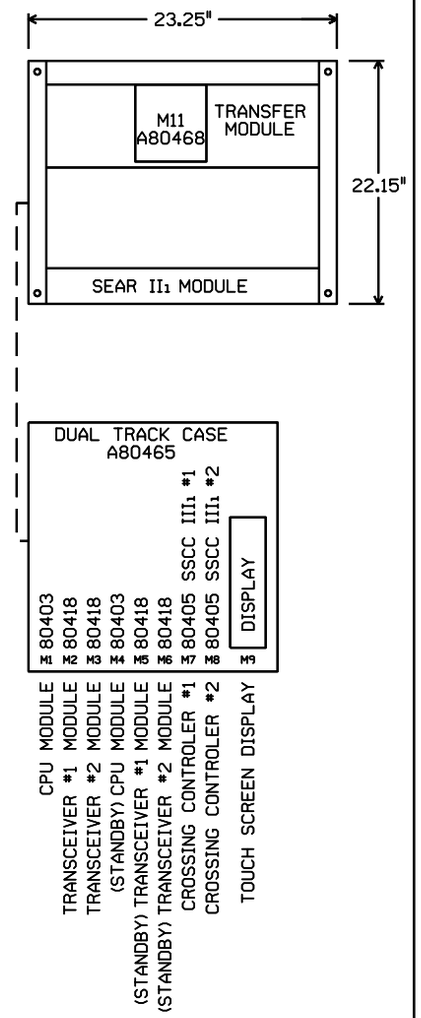

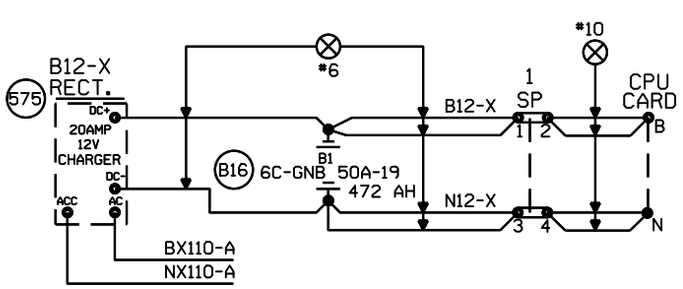

"Mf" FREQUENCY (HZ)	MAXIMUM TRANSMIT WIRE LENGTH (FEET)
86	100
114	125
156	150
211	200
285-970	250

NOTE:
EACH TRANSMITTER TO RAIL WIRE FROM XMT1 AND XMT2 MUST NOT EXCEED THE MAXIMUM LENGTH SPECIFIED IN THE TABLE SHOWN. THE RECEIVER WIRE LENGTH IS NOT CRITICAL. DOES NOT APPLY TO 6 TRACK WIRE APPLICATION.

NEW SHEET

Designed: 01/12/11
INSTALL FLASHERS AND GATES WITH CWT AT M.P. 183.66 TR 51
Rec#: WO#: 07265
IS: /TJD
/IRG/JTB

MODIFICATION LEVEL	
Q. A. LAST LEVEL CHECKED	DU
LAST LEVEL MOD THIS TYPICAL	DU
LAST LEVEL BY DESIGNER	DU
CHANGED FROM TYPICAL?	Y

REV 01.24.11 4K 2TKGF.3

UNION PACIFIC
QUALITY PRODUCTIVITY SAFETY
SIGNAL DESIGN

Date: 01/12/11
Des: IRG
Chk: TJD
AFE: 07265

UNION PACIFIC RAILROAD
FINDLAY, ILLINOIS
TR 51
PANA SUBDIVISION
Office of Sr AVP Engineering - Signal/TCO Omaha, Nebraska

Sh.: 3
DOT 166958J
MP: 183.66
ID: 030118366.3X

Minimum Program Steps Report

Location and SIN

DOT Number: 166958J
Milepost Number: 183.66
Site Name: FINDLAY, IL

SIN: 762010010016 *

* Parameter is part of office check number calculation.

MCF and Template Selection

MCF Name: GCP-T6X-02-1.mcf
MCF Revision: 021
MCFCRC: 6076E435

Template = 1A:6 Trk Bi *

* Parameter is part of office check number calculation.

Minimum Program Steps

TEMPLATE: module configuration
Track 2/RIO 1 Slot = Track *

TEMPLATE: track 1-Bi, Island
Track 1 : GCP Frequency = 285 Hz (See Plans)
Track 1 : Approach Distance = 3492 ft (See Plans)
Track 1 : Prime Warning Time = 29 sec (See Plans)
Track 1 : Prmpt Warning Time = 45 sec (See Plans) (Hidden)
Track 1 : Prime UAX = IP *
Track 1 : Prime UAX Pickup = 15 sec *
Track 1 : GCP Transmit Level = Medium (Set in Field)
Track 1 : Isl Frequency = 20.2 kHz (See Plans)

TEMPLATE: track 2-Bi, Island
Track 2 : GCP Frequency = 970 Hz (See Plans)
Track 2 : Approach Distance = 998 ft (See Plans)
Track 2 : Prime Warning Time = 29 sec (See Plans)
Track 2 : Prmpt Warning Time = 45 sec (See Plans) (Hidden)
Track 2 : GCP Transmit Level = Medium (Set in Field)
Track 2 : Isl Frequency = 10.0 kHz (See Plans)

TEMPLATE: AND 1 XR
AND 1 Enable Used = Yes *

TEMPLATE: SSCC
SSCC 1 : Lamp Neutral Test = Off (Set in Field)
SSCC 2 : Lamp Neutral Test = Off (Set in Field)

TEMPLATE: OOS
OOS Control = OOS IPs *

TEMPLATE: IP assignment 1
IN 1.1 = T1 Prime UAX *
IN 1.2 = Out Of Service IP 1 *
IN 2.2 = Out Of Service IP 2 *

TEMPLATE: IP assignment SSCC
IN 7.1 = AND 1 XR Enable *

GCP: track 1
Track 1 : Island Distance = 146 ft *

GCP: track 2
Track 2 : Island Distance = 146 ft *

ADVANCED: site options
Daylight Savings = On *

* Parameter is part of office check number calculation.

Check Numbers

Office Check No. (DT 4.6.0): 1C64F568
Office Check Number: 1C64F568
Config. Check Number: 0455BEE9
(Based on MCF Revision 021)

Parameters not part of office check number calculation:

Track 1 : GCP Frequency = 285 Hz
Track 1 : Approach Distance = 3492 ft
Track 1 : Prime Warning Time = 29 sec
Track 1 : Prmpt Warning Time = 45 sec (See Plans)
Track 1 : GCP Transmit Level = Medium (Set in Field)
Track 1 : Isl Frequency = 20.2 kHz
Track 2 : GCP Frequency = 970 Hz
Track 2 : Approach Distance = 998 ft
Track 2 : Prime Warning Time = 29 sec
Track 2 : Prmpt Warning Time = 45 sec (See Plans)
Track 2 : GCP Transmit Level = Medium (Set in Field)
Track 2 : Isl Frequency = 10.0 kHz
SSCC 1 : Lamp Neutral Test = Off (Set in Field)
SSCC 2 : Lamp Neutral Test = Off (Set in Field)

Comments

<none>

Configuration Package File

Filename: 030118366_166958J.pac
Path: B:\Customers\UP\Working\Crossing\jxxd01736\documents\gcp program\
Date/Time: 4/25/2011 8:31:13

NEW SHEET

				Designed: 01/12/11 INSTALL FLASHERS AND GATES WITH CWT AT M.P. 183.66 TR 51 Rec#: WO#: 07265 /TJD IS: / /IRG /JTB	**NOTE: Actual OFFSET and ISLAND distances must be verified by field personnel.**	UNION PACIFIC QUALITY PRODUCTIVITY SAFETY SIGNAL DESIGN	Date: 01/12/11 Des: IRG Chk: TJD AFE: 07265	**UNION PACIFIC RAILROAD** FINDLAY, ILLINOIS TR 51 PANA SUBDIVISION Office of Sr AVP Engineering - Signal/TCO Omaha, Nebraska	Sh.: 3A DOT 166958J MP: 183.66 ID: 030118366.3AX