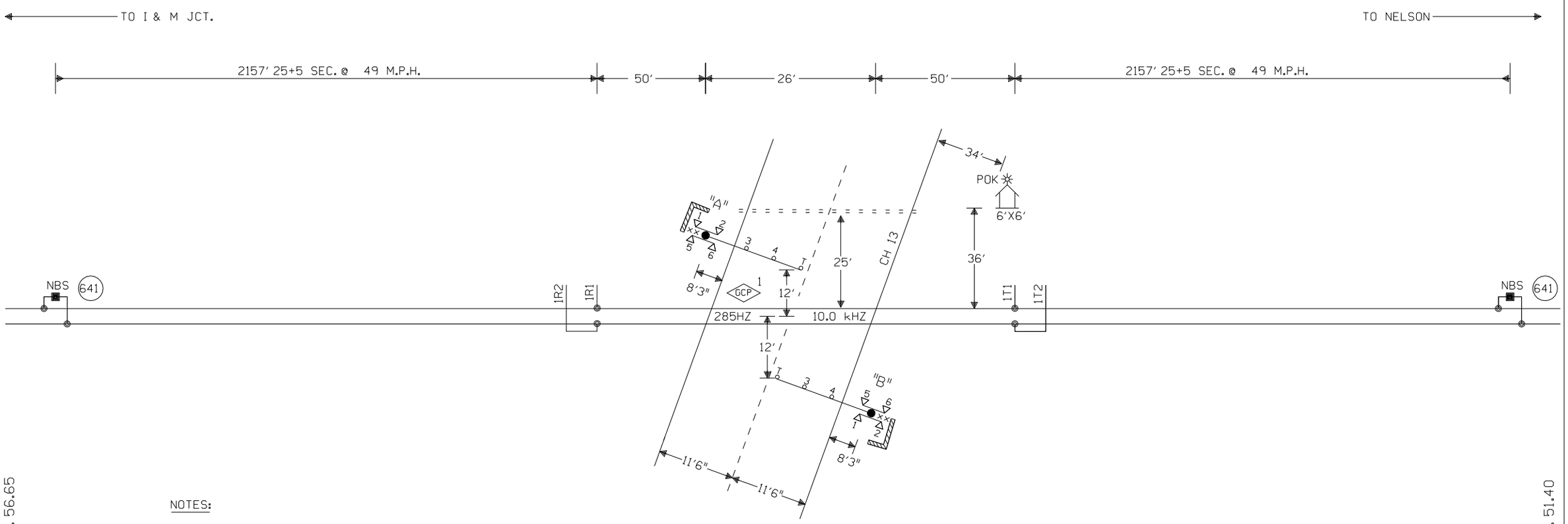

NOTES:

⊗ = TWISTED WIRES
INSULATED 1 TWIST PER FT.
ALL TRACK WIRES 2C. #6

TRANSMITTER AND RECEIVER LEADS
TO BE SEPARATED BY AT LEAST 12" IN TRENCH,
LENGTHS SHOULD NOT EXCEED MANUFACTURES
RECOMMENDATION.

TOP OF FOUNDATION TO BE AT SAME ELEVATION
AS THE SURFACE OF THE TRAVELED WAY & NO
MORE THAN 4" ABOVE THE SURFACE OF THE GROUND.

ALL BUNGALOW WIRING TO BE #16 AWG FLEX
UNLESS OTHERWISE SPECIFIED EXCEPT ALL GROUND
WIRE TO BE #6 AWG FLEX OR LARGER.

ALL WIRING IN GATE MECHANISM TO BE #10 "AWG FLEX".

REFER TO UP STANDARD DWG FOR BUNGALOW GROUNDING.

PORTABLE GENERATOR EXTENSION CORD
FOR 240V TO 240V IS PROVIDED AS WELL
AS A 120V TO 240V ADAPTER.

ALL LIGHTS TO BE 12" ROUNDELS.

= = = = = = 4" X 40' CONDUIT

LIGHTS: LED LIGHTS

GATE A: 20'
GATE B: 20'

xx = BELL

= RETAINING WALL

W(S) ◄——○——► E(N)

NEW SHEET

					Designed: 11/3/10 INSTALL FLASHERS AND GATES WITH CWT AT M.P. 54.61 Rec#: WO#: 07035 IS: / /RLT /BDF /JTB	MODIFICATION LEVEL		UNION PACIFIC QUALITY PRODUCTIVITY SAFETY SIGNAL DESIGN	Date: 11/03/10 Des: BDF Chk: RLT AFE: 07035	UNION PACIFIC RAILROAD SPEER, ILLINOIS CH 13 PEORIA SUBDIVISION Office of Sr AVP Engineering - Signal/TCO Omaha, Nebraska	Sh.: 1 DOT 175659B MP: 54.61 ID: STL5461.1X
						Q.A. LAST LEVEL CHECKED	DT				
						LAST LEVEL MOD THIS TYPICAL	DT				
						LAST LEVEL BY DESIGNER	DU				
						CHANGED FROM TYPICAL? REV 05.24.10 4K 1TKBG.1	Y				

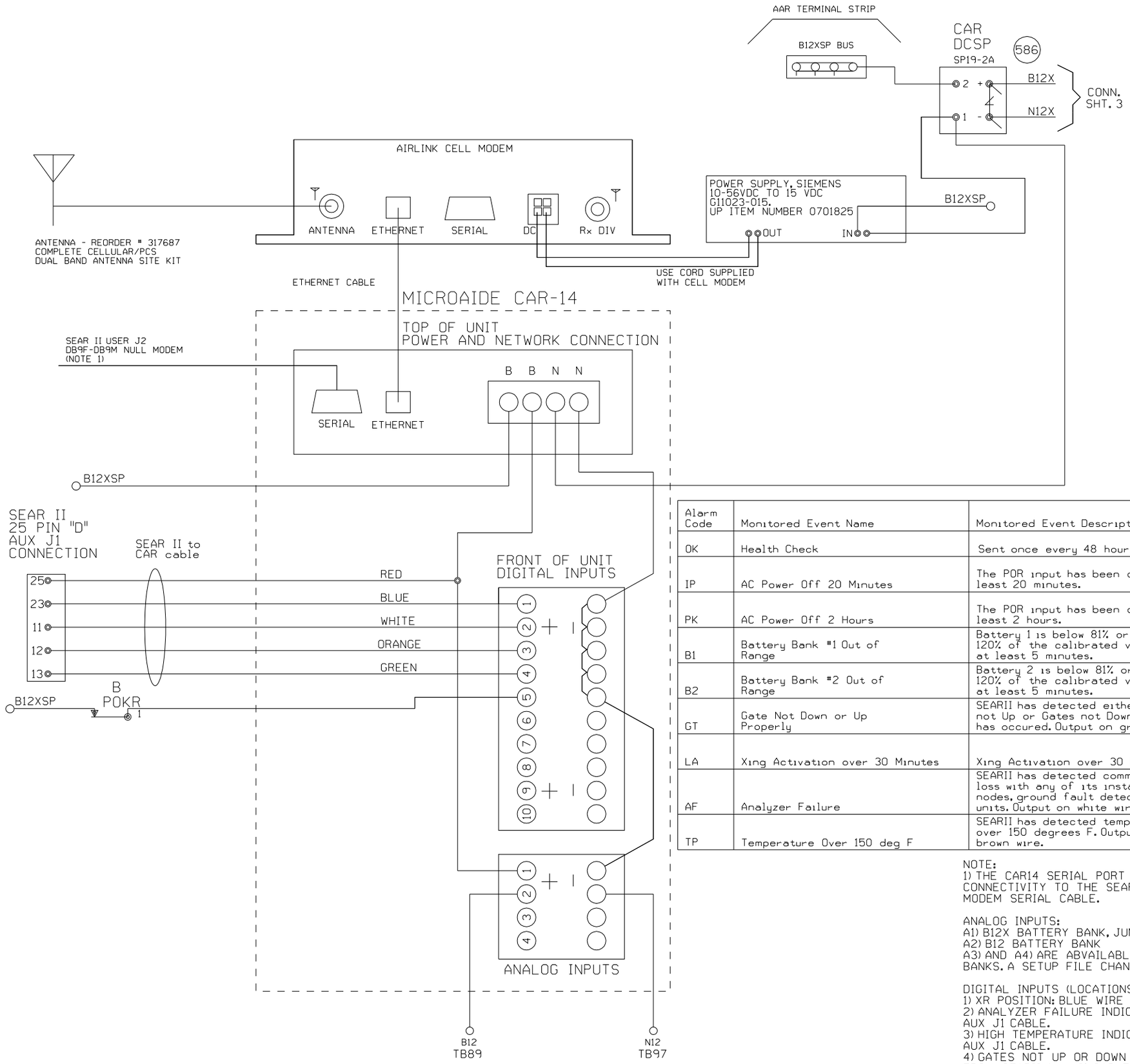

Alarm Code	Monitored Event Name	Monitored Event Description	Alarm Cleared
OK	Health Check	Sent once every 48 hours.	
IP	AC Power Off 20 Minutes	The POR input has been down for at least 20 minutes.	The POR input comes back on for at least 5 minutes after an AC Power Off Alarm
PK	AC Power Off 2 Hours	The POR input has been down for at least 2 hours.	The POR input comes back on for at least 5 minutes after an AC Power Off Alarm
B1	Battery Bank #1 Out of Range	Battery 1 is below 81% or above 120% of the calibrated value for at least 5 minutes.	Battery 1 is within acceptable range for at least 5 minutes.
B2	Battery Bank #2 Out of Range	Battery 2 is below 81% or above 120% of the calibrated value for at least 5 minutes.	Battery 2 is within acceptable range for at least 5 minutes.
GT	Gate Not Down or Up Properly	SEARII has detected either a Gates not Up or Gates not Down alarm has occured. Output on green wire.	The Gate Up or Gates Down indications indicated true after a Gate Not Down or Gate Not Up alarm was triggered.
LA	Xing Activation over 30 Minutes	Xing Activation over 30 Minutes	Crossing has recovered after a Long Activation Alarm had occured.
AF	Analyzer Failure	SEARII has detected communication loss with any of its installed echelon nodes, ground fault detectors, or TSS units. Output on white wire.	Analyzer has recovered after an analyzer failure.
TP	Temperature Over 150 deg F	SEARII has detected temperature over 150 degrees F. Output on brown wire.	Temperature sensor inside SEAR detects temperature is OK after a Hi-Temp alarm.

NOTE:
1) THE CAR14 SERIAL PORT IS VAILABLE TO ADD REMOTE CONNECTIVITY TO THE SEARII. USE A DB9F TO DB9M NULL MODEM SERIAL CABLE.

ANALOG INPUTS:
A1) B12X BATTERY BANK, JUMPERED FOR CAR14 POWER INPUTS
A2) B12 BATTERY BANK
A3) AND A4) ARE ABVAILABLE TO MONITOR ADDITIONAL BATERY BANKS. A SETUP FILE CHANGE IS REQUIRED.

DIGITAL INPUTS (LOCATIONS WITH SEARII)
1) XR POSITION: BLUE WIRE FROM SEARII AUX J1 CABLE
2) ANALYZER FAILURE INDICATION: WHITE WIRE FROM SEARII AUX J1 CABLE.
3) HIGH TEMPERATURE INDICATION: ORANGE WIRE FROM SEARII AUX J1 CABLE.
4) GATES NOT UP OR DOWN PROPERLY INDICATION: GREEN WIRE FROM SEARII AUX J1 CABLE.
5) POWER OFF INDICATION: POR

NEW SHEET

Designed: 11/3/10
INSTALL FLASHERS AND GATES WITH CWT AT M.P. 54.61
Rec#: IS: WO#: 07035 /RLT /BDF /JTB

MODIFICATION LEVEL	
Q.A. LAST LEVEL CHECKED	DU
LAST LEVEL MOD THIS TYPICAL	DU
LAST LEVEL BY DESIGNER	DU
CHANGED FROM TYPICAL?	Y

REV 01.24.11 4K ACDCCAR14SII.3

UNION PACIFIC
QUALITY PRODUCTIVITY SAFETY
SIGNAL DESIGN

Date: 11/03/10
Des: BDF
Chk: RLT
AFE: 07035

UNION PACIFIC RAILROAD
SPEER, ILLINOIS
CH 13
PEORIA SUBDIVISION
Office of Sr AVP Engineering - Signal/TCO Omaha, Nebraska

Sh.: 1A
DOT 175659B
MP: 54.61
ID: STL5461.1AX

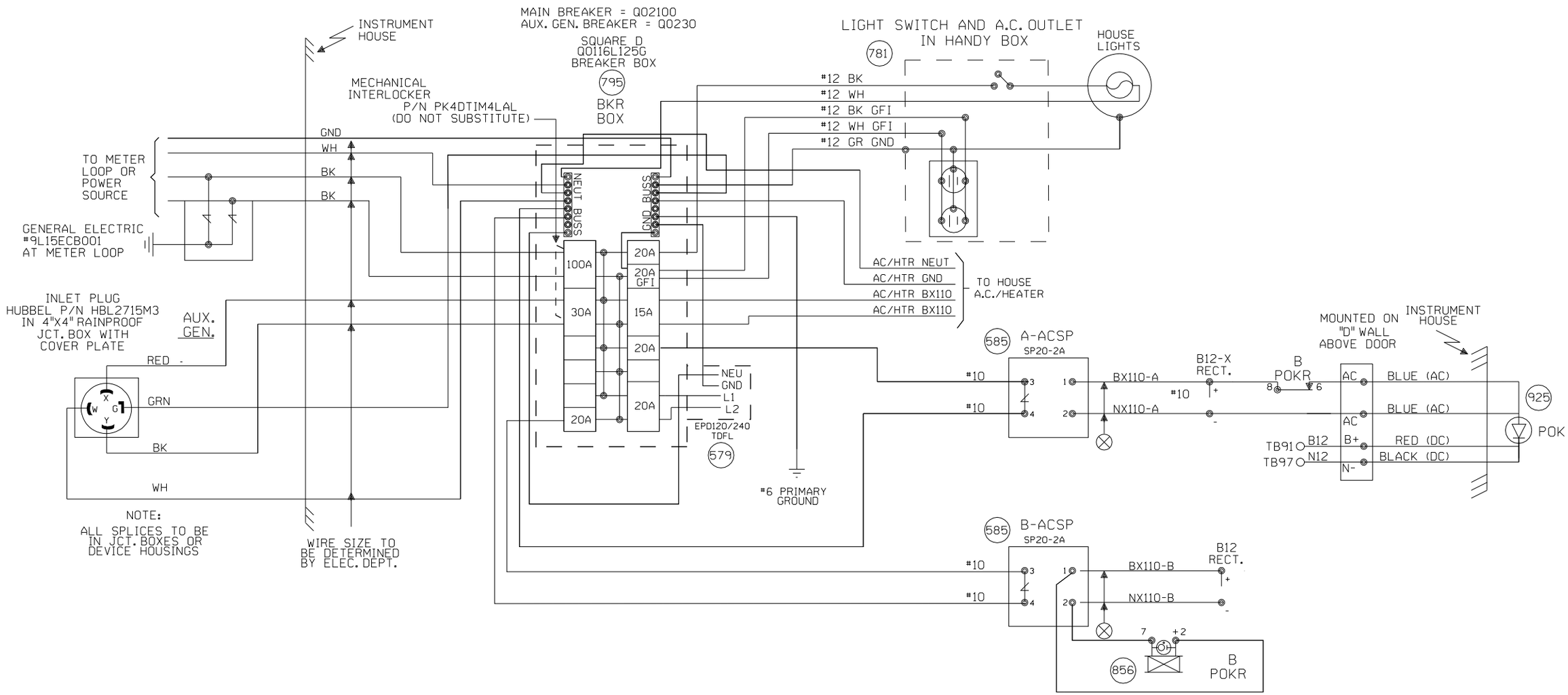

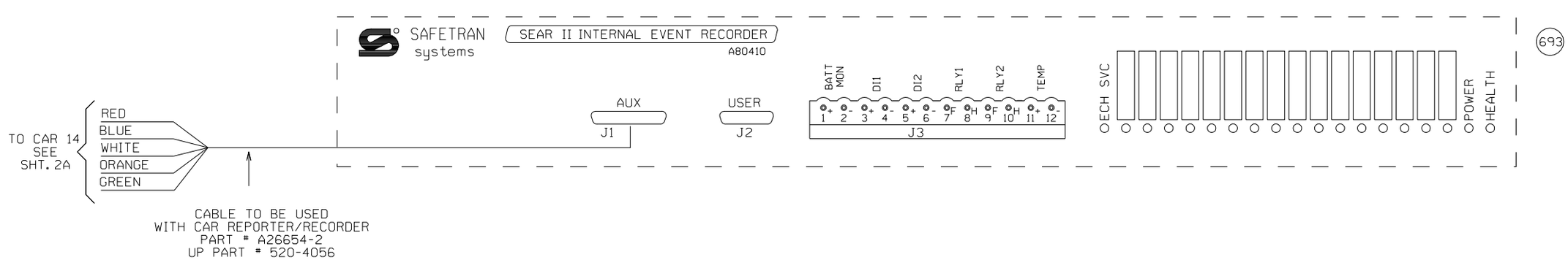

NEW SHEET

Designed: 11/3/10

INSTALL FLASHERS AND GATES WITH CWT AT M.P. 54.61

Rec#: 15: WO#: 07035 /RLT /BDF /JTB

MODIFICATION LEVEL	
Q.A. LAST LEVEL CHECKED	DU
LAST LEVEL MOD THIS TYPICAL	DU
LAST LEVEL BY DESIGNER	DU
CHANGED FROM TYPICAL?	Y

REV 01.24.11 4K SEARAC.2

UNION PACIFIC
QUALITY PRODUCTIVITY SAFETY
SIGNAL DESIGN

Date: 11/03/10
Des: BDF
Chk: RLT
AFE: 07035

UNION PACIFIC RAILROAD

SPEER, ILLINOIS
CH 13
PEORIA SUBDIVISION

Office of Sr AVP Engineering - Signal/TCO Omaha, Nebraska

Sh.: 2
DOT 175659B
MP: 54.61
ID: STL5461.2X

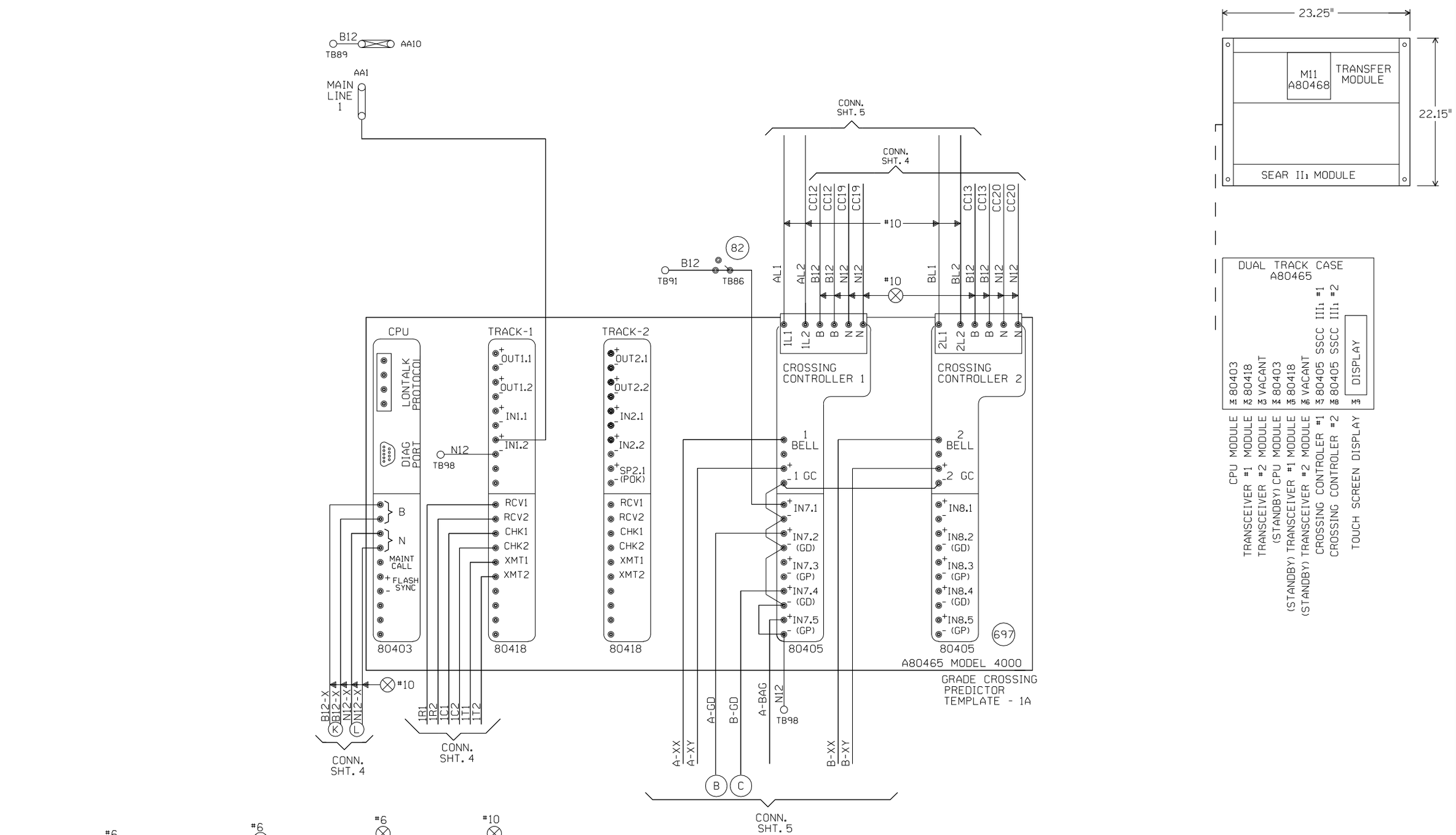

"Mf" FREQUENCY (HZ)	MAXIMUM TRANSMIT WIRE LENGTH (FEET)
86	100
114	125
156	150
211	200
285-970	250

NOTE:
EACH TRANSMITTER TO RAIL WIRE FROM XMT1 AND XMT2 MUST NOT EXCEED THE MAXIMUM LENGTH SPECIFIED IN THE TABLE SHOWN. THE RECEIVER WIRE LENGTH IS NOT CRITICAL. DOES NOT APPLY TO 6 TRACK WIRE APPLICATION.

NEW SHEET

Designed: 11/3/10
INSTALL FLASHERS AND GATES WITH CWT AT M.P. 54.61
Rec'd: 15: WO#: 07035 /RLT /BDF/JTB

MODIFICATION LEVEL	
O.A. LAST LEVEL CHECKED	DT
LAST LEVEL MOD THIS TYPICAL	DT
LAST LEVEL BY DESIGNER	DU
CHANGED FROM TYPICAL?	Y

Rev 05.24.10 4K 2TKGF.3

UNION PACIFIC
QUALITY PRODUCTIVITY SAFETY
SIGNAL DESIGN

Date: 11/03/10
Des: BDF
Chk: RLT
AFE: 07035

UNION PACIFIC RAILROAD
SPEER, ILLINOIS
CH 13
PEORIA SUBDIVISION
Office of Sr AVP Engineering - Signal/TCO Omaha, Nebraska

Sh.: 3
DOT 175659B
MP: 54.61
ID: STL5461.3X

Minimum Program Steps Report

Location and SIN

DOT Number: 175659B
Milepost Number: 54.61
Site Name: SPEER,IL

SIN: 762010010016 *

* Parameter is part of office check number calculation.

MCF and Template Selection

MCF Name: GCP-T6X-02-1.mcf
MCF Revision: 021
MCFCRC: 6076E435

Template = 1A:6 Trk Bi *

* Parameter is part of office check number calculation.

Minimum Program Steps

TEMPLATE: track 1-Bi, Island
Track 1 : GCP Frequency = 285 Hz
Track 1 : Approach Distance = 2157 ft
Track 1 : Prime Warning Time = 25 sec
Track 1 : GCP Transmit Level = Medium (Set in Field)
Track 1 : Isl Frequency = 10.0 kHz

TEMPLATE: AND 1 XR
AND 1 Enable Used = Yes *

TEMPLATE: SSCC
SSCC 1 : Lamp Neutral Test = Off (Set in Field)
SSCC 2 : Lamp Neutral Test = Off (Set in Field)

TEMPLATE: OOS
OOS Control = OOS IPs *

TEMPLATE: IP assignment 1
IN 1.2 = Out Of Service IP 1 *

TEMPLATE: IP assignment SSCC
IN 7.1 = AND 1 XR Enable *

GCP: track 1
Track 1 : Island Distance = 126 ft *

ADVANCED: site options
Daylight Savings = On *

* Parameter is part of office check number calculation.

Check Numbers

Office Check No. (DT 4.6.0): 7F356956
Office Check Number: 7F356956
Config. Check Number: 6F2F5CFE
(Based on MCF Revision 021)

Parameters not part of office check number calculation:

Track 1 : GCP Frequency = 285 Hz
Track 1 : Approach Distance = 2157 ft
Track 1 : Prime Warning Time = 25 sec
Track 1 : GCP Transmit Level = Medium (Set in Field)
Track 1 : Isl Frequency = 10.0 kHz
SSCC 1 : Lamp Neutral Test = Off (Set in Field)
SSCC 2 : Lamp Neutral Test = Off (Set in Field)

Comments

<none>

Configuration Package File

Filename: STL5461_175659B.pac
Path: M:\USER\EngT912 Frerichs\Crossing Projects\CROSSING DESIGN\750 N DOT 175659B\PAC FILE\
Date/Time: 3/29/2011 8:26:48

NEW SHEET

Designed: 11/3/10
INSTALL FLASHERS AND GATES WITH CWT AT M.P. 54.61
Rec'd: WO#: 07035
IS: /RLT /BDF /JTB

NOTE: Actual OFFSET and ISLAND distances must be verified by field personnel.

UNION PACIFIC
QUALITY PRODUCTIVITY SAFETY
SIGNAL DESIGN

Date:	11/03/10
Des:	BDF
Chk:	RLT
AFE:	07035

UNION PACIFIC RAILROAD
SPEER, ILLINOIS
CH 13
PEORIA SUBDIVISION
Office of Sr AVP Engineering - Signal/TCO Omaha, Nebraska

Sh.:	3A
DOT	175659B
MP:	54.61
ID:	STL5461.3AX

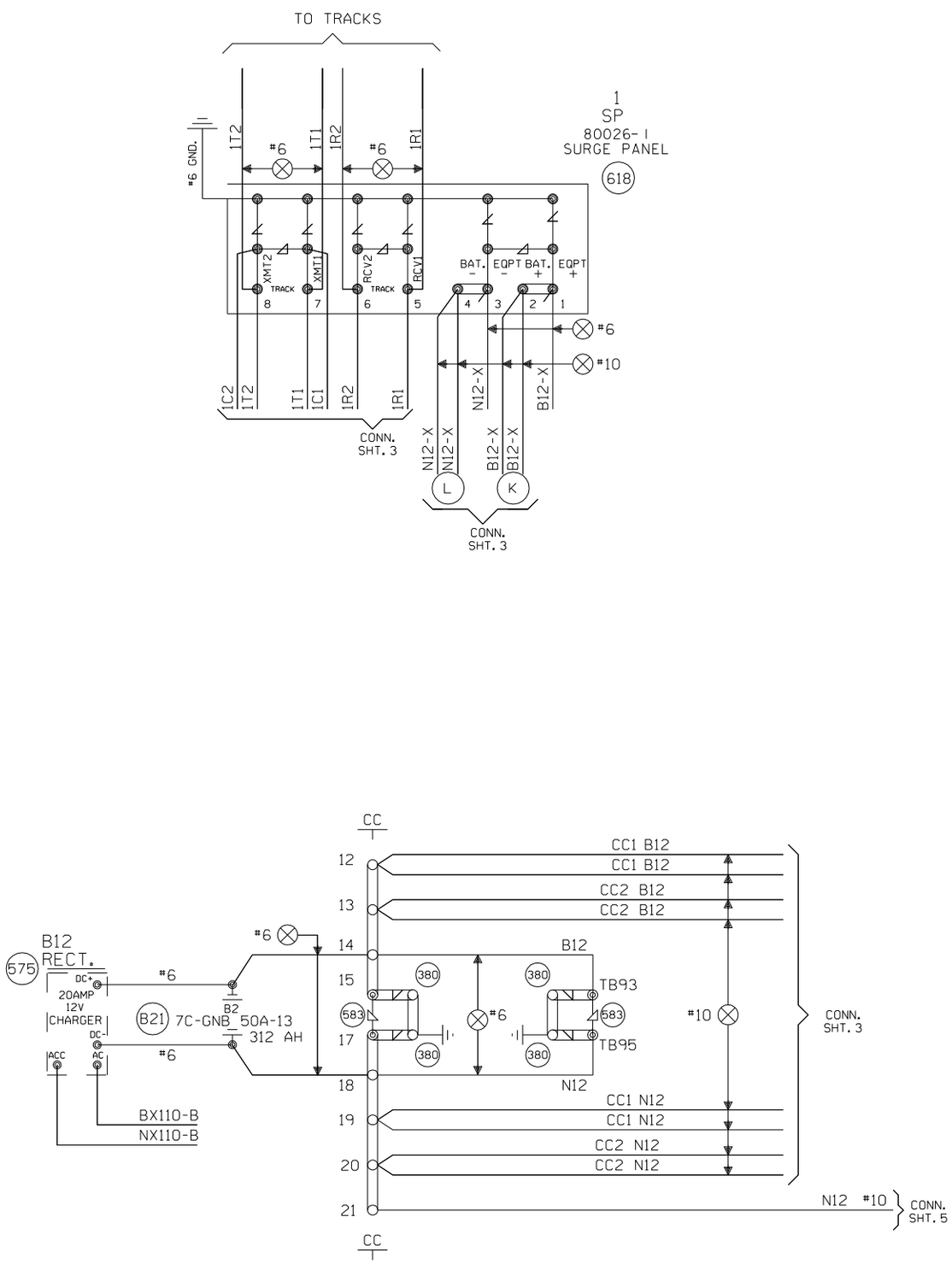

NEW SHEET

					Designed: 11/3/10 INSTALL FLASHERS AND GATES WITH CWT AT M.P. 54.61 Rec#: WO#: 07035 IS: /RLT / /BDF/JTB	MODIFICATION LEVEL		UNION PACIFIC QUALITY PRODUCTIVITY SAFETY SIGNAL DESIGN	Date: 11/03/10 Des: BDF Chk: RLT AFE: 07035	UNION PACIFIC RAILROAD SPEER, ILLINOIS CH 13 PEORIA SUBDIVISION Office of Sr AVP Engineering - Signal/TCO Omaha, Nebraska	Sh.: 4 DOT 175659B MP: 54.61 ID: STL5461.4X
						Q.A. LAST LEVEL CHECKED	DT				
						LAST LEVEL MOD THIS TYPICAL	DT				
						LAST LEVEL BY DESIGNER	DU				
						CHANGED FROM TYPICAL? REV 05.24.10 4K 4TKSPGFC.4	Y				

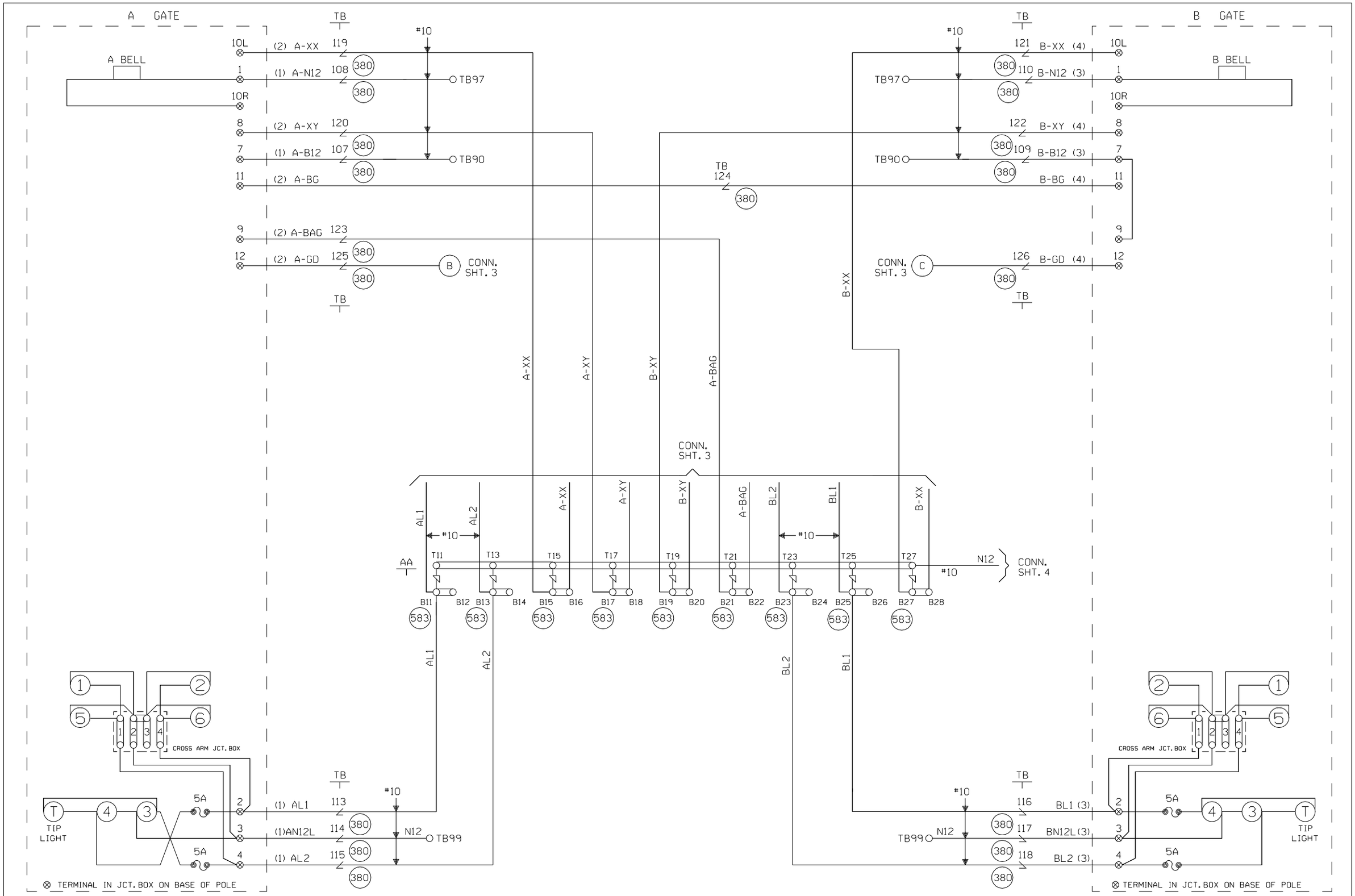

CABLE TABULATION

CABLE NO. 1 5C. NO.6 U.G.B.T. TO GATE A
CABLE NO. 2 7C. NO.14 U.G.B.T. TO GATE A
CABLE NO. 3 5C. NO.6 U.G.B.T. TO GATE B
CABLE NO. 4 7C. NO.14 U.G.B.T. TO GATE B

NEW SHEET

Designed: 11/3/10

INSTALL FLASHERS AND GATES WITH CWT AT M.P. 54.61

Rec'd: WO#: 07035 /RLT
IS: / /BDF /JTB

MODIFICATION LEVEL	
O.A. LAST LEVEL CHECKED	DT
LAST LEVEL MOD THIS TYPICAL	DT
LAST LEVEL BY DESIGNER	DU
CHANGED FROM TYPICAL?	Y
REV 05.24.10 4K GFSLTYP.5	

UNION PACIFIC
QUALITY PRODUCTIVITY SAFETY
SIGNAL DESIGN

Date:	11/03/10
Des:	BDF
Chk:	RLT
AFE:	07035

UNION PACIFIC RAILROAD
SPEER, ILLINOIS
CH 13
PEORIA SUBDIVISION
Office of Sr AVP Engineering - Signal/TCO Omaha, Nebraska

Sh.:	5
DOT	175659B
MP:	54.61
ID:	STL5461.5X

WCH 3593-E

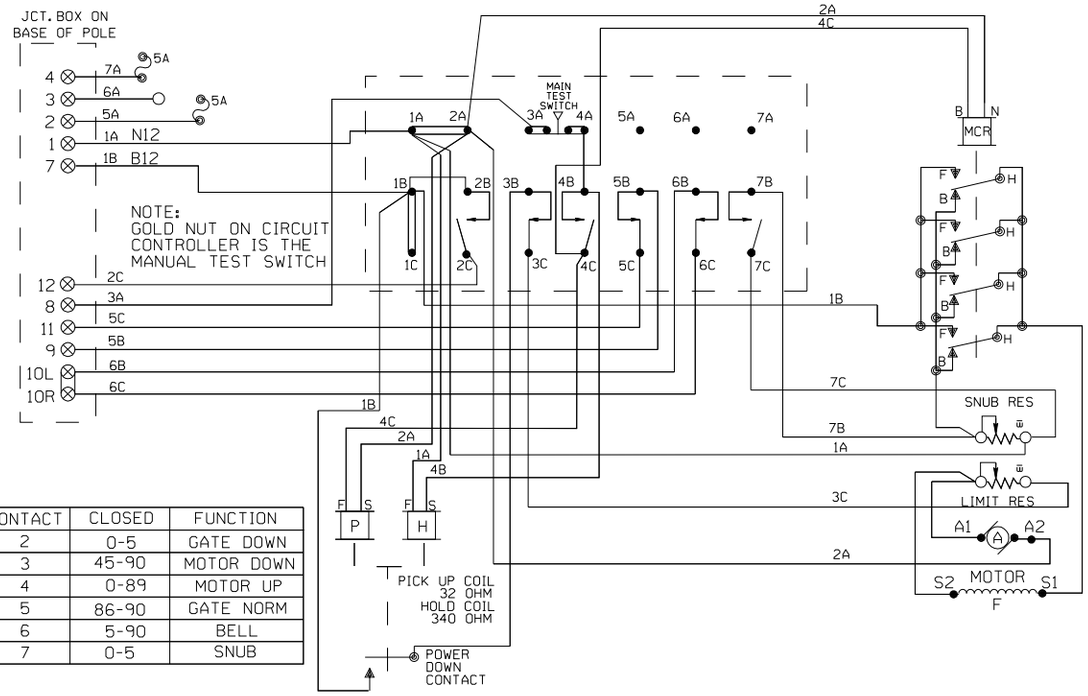

CONTACT	CLOSED	FUNCTION
2	0-5	GATE DOWN
3	45-90	MOTOR DOWN
4	0-89	MOTOR UP
5	86-90	GATE NORM
6	5-90	BELL
7	0-5	SNUB

WCH 3597-E

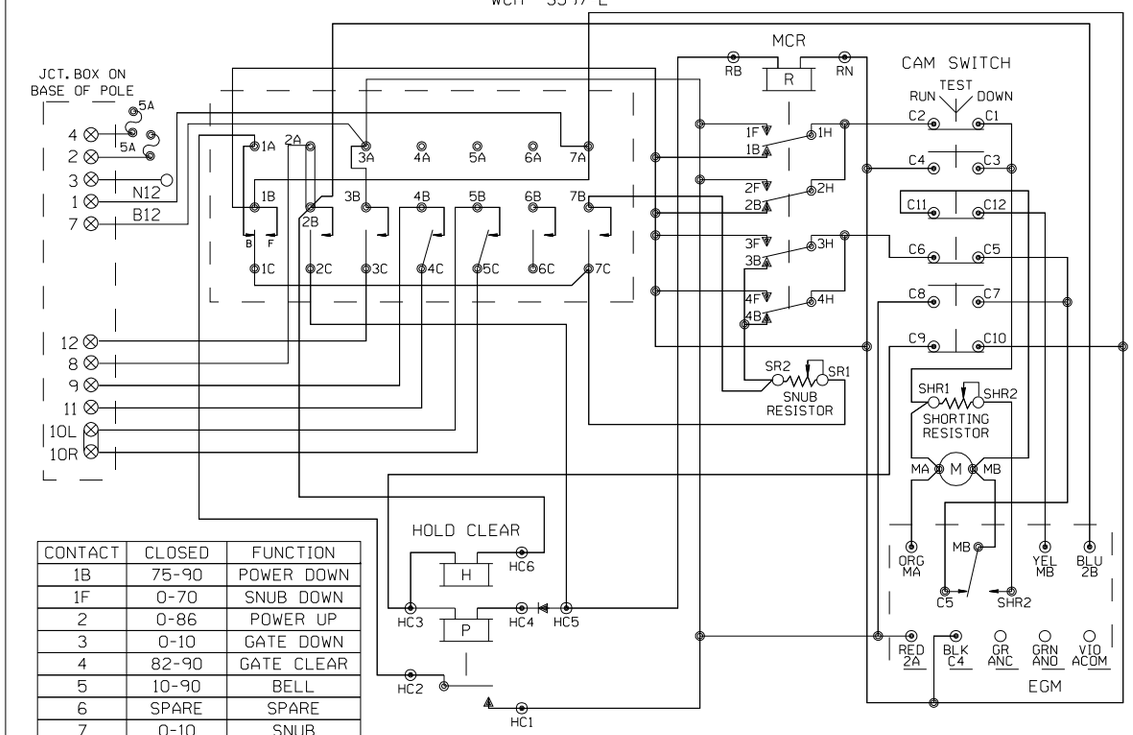

CONTACT	CLOSED	FUNCTION
1B	75-90	POWER DOWN
1F	0-70	SNUB DOWN
2	0-86	POWER UP
3	0-10	GATE DOWN
4	82-90	GATE CLEAR
5	10-90	BELL
6	SPARE	SPARE
7	0-10	SNUB

WCH 3597-RB

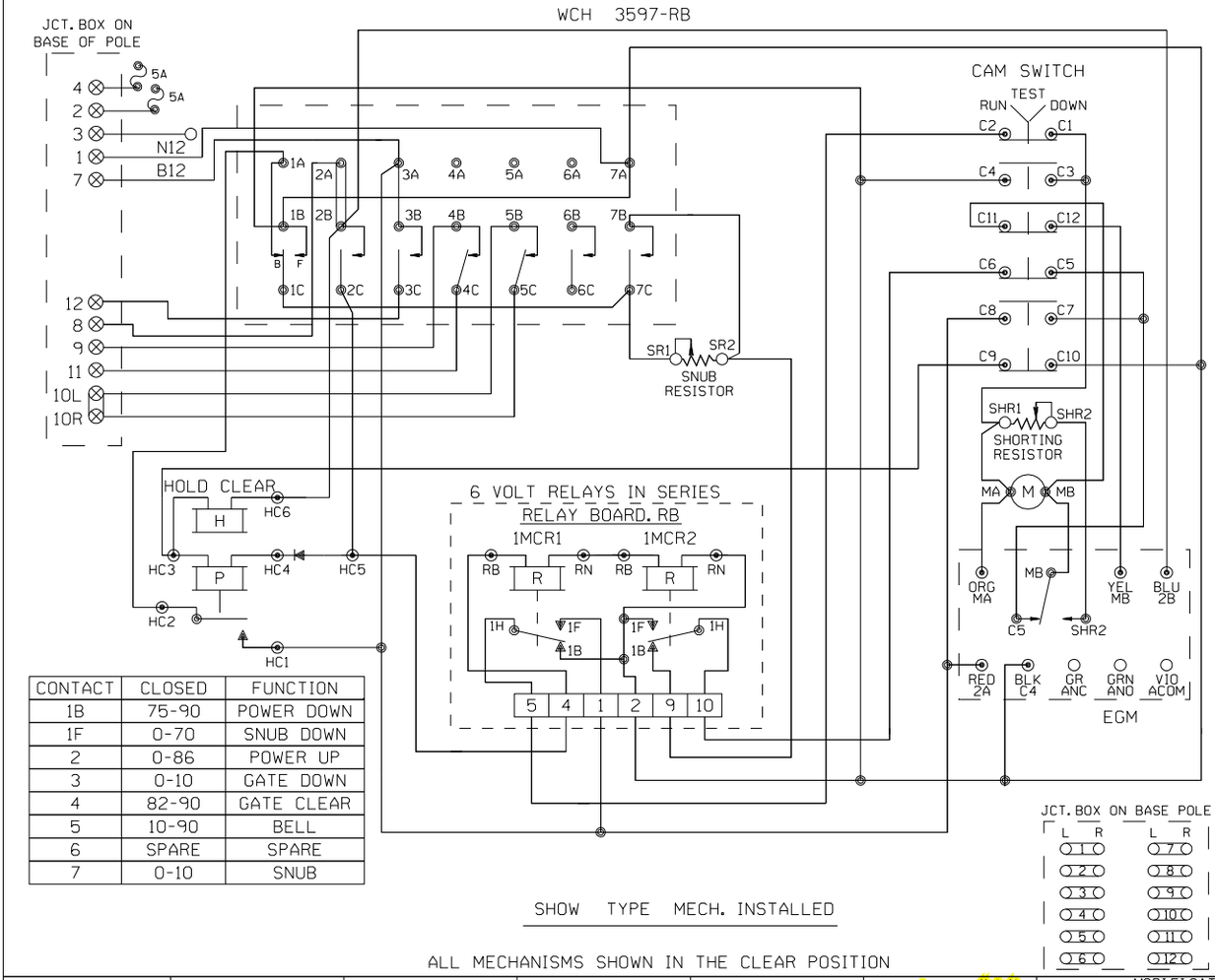

CONTACT	CLOSED	FUNCTION
1B	75-90	POWER DOWN
1F	0-70	SNUB DOWN
2	0-86	POWER UP
3	0-10	GATE DOWN
4	82-90	GATE CLEAR
5	10-90	BELL
6	SPARE	SPARE
7	0-10	SNUB

SHOW TYPE MECH. INSTALLED

ALL MECHANISMS SHOWN IN THE CLEAR POSITION

SAFETRAN S-60

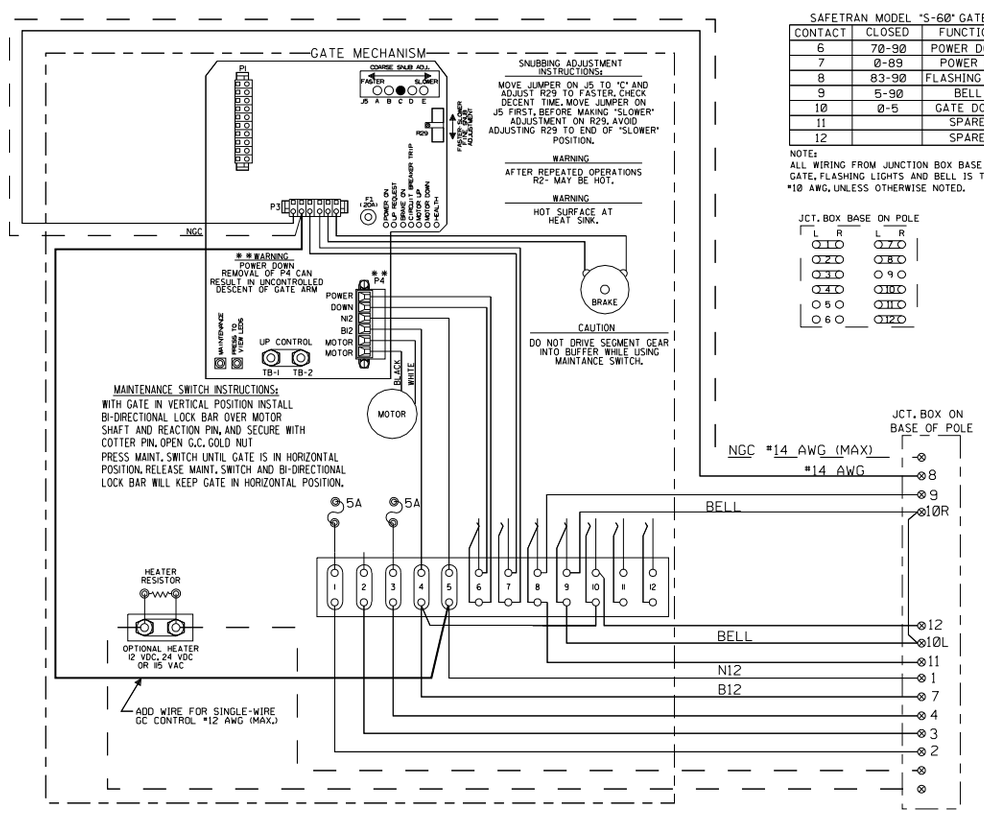

SAFETRAN MODEL "S-60" GATE

CONTACT	CLOSED	FUNCTION
6	70-90	POWER DOWN
7	0-89	POWER UP
8	83-90	FLASHING LGT.
9	5-90	BELL
10	0-5	GATE DOWN
11		SPARE
12		SPARE

NOTE:
ALL WIRING FROM JUNCTION BOX BASE TO GATE, FLASHING LIGHTS AND BELL IS TO BE #10 AWG, UNLESS OTHERWISE NOTED.

JCT. BOX BASE ON POLE

NEW SHEET

Designed: 11/3/10

INSTALL FLASHERS AND GATES WITH CWT AT M.P. 54.61

Rec'd IS: WO#:07035 /RLT /BDF /JTB

MODIFICATION LEVEL	
O.A. LAST LEVEL CHECKED	DT
LAST LEVEL MOD THIS TYPICAL	DT
LAST LEVEL BY DESIGNER	DU
CHANGED FROM TYPICAL?	N

REV 05.24.10 4K GWIRING.7

UNION PACIFIC — QUALITY PRODUCTIVITY SAFETY — SIGNAL DESIGN

Date: 11/03/10
Des: BDF
Chk: RLT
AFE: 07035

UNION PACIFIC RAILROAD

SPEER, ILLINOIS
CH 13
PEORIA SUBDIVISION

Office of Sr AVP Engineering - Signal/TCO Omaha, Nebraska

Sh.: 6
DOT 175659B
MP: 54.61
ID: STL5461.6X

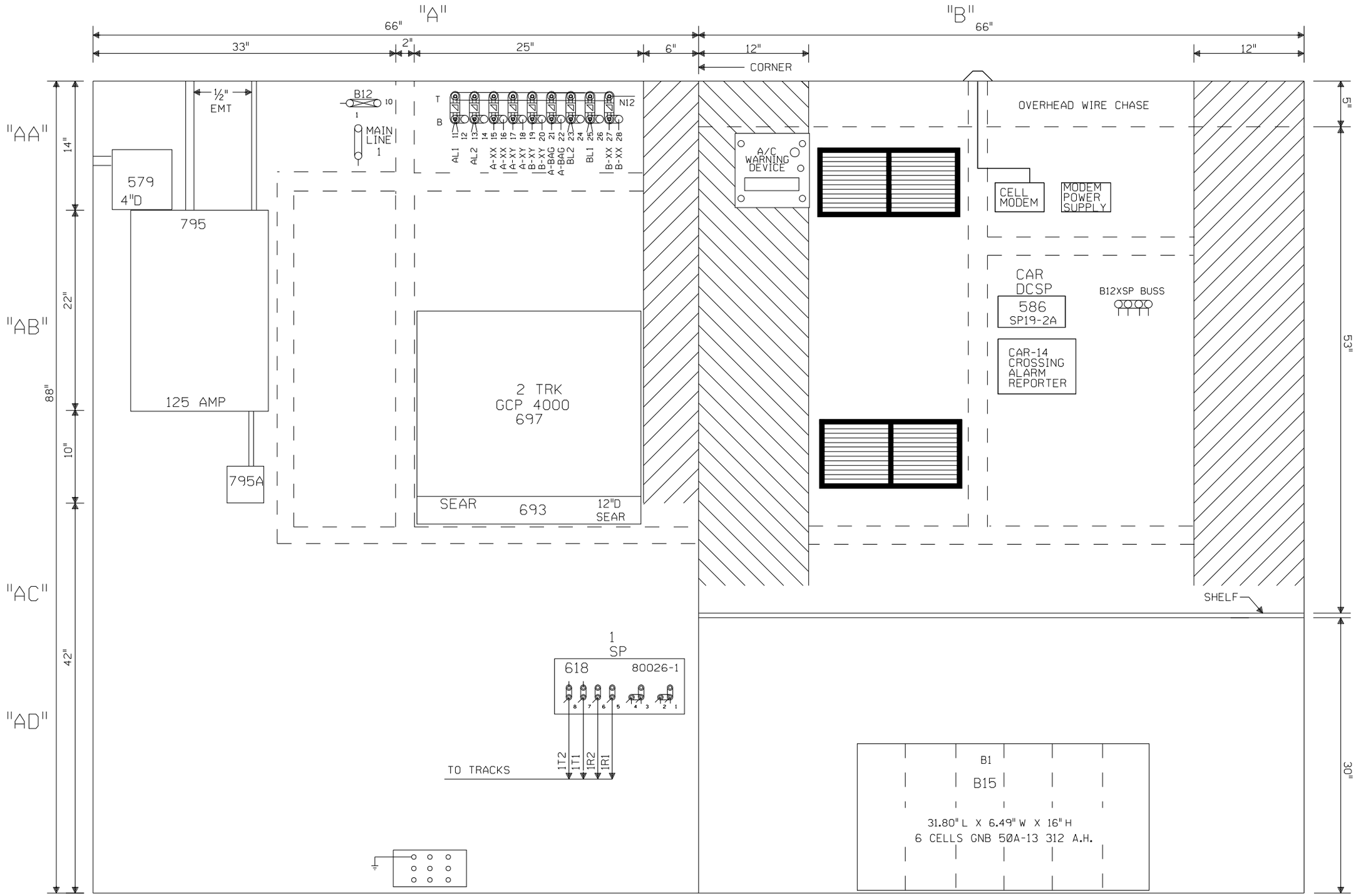

NOTE: ALL DIMENSIONS SHOWN ARE APPROXIMATE.

NEW SHEET

					Designed: 11/3/10 INSTALL FLASHERS AND GATES WITH CWT AT M.P. 54.61 Rec#: WO#: 07035 IS: /RLT / /BDF/JTB	MODIFICATION LEVEL		UNION PACIFIC QUALITY PRODUCTIVITY SAFETY SIGNAL DESIGN	Date: 11/03/10 Des: BDF Chk: RLT AFE: 07035	UNION PACIFIC RAILROAD SPEER, ILLINOIS CH 13 PEORIA SUBDIVISION Office of Sr AVP Engineering - Signal/TCO Omaha, Nebraska	Sh.: 7 DOT 175659B MP: 54.61 ID: STL5461.7X
						Q.A. LAST LEVEL CHECKED	DT				
						LAST LEVEL MOD THIS TYPICAL	DT				
						LAST LEVEL BY DESIGNER	DU				
						CHANGED FROM TYPICAL?	Y				
						REV 05.24.10 4K 4TKGFC.8					

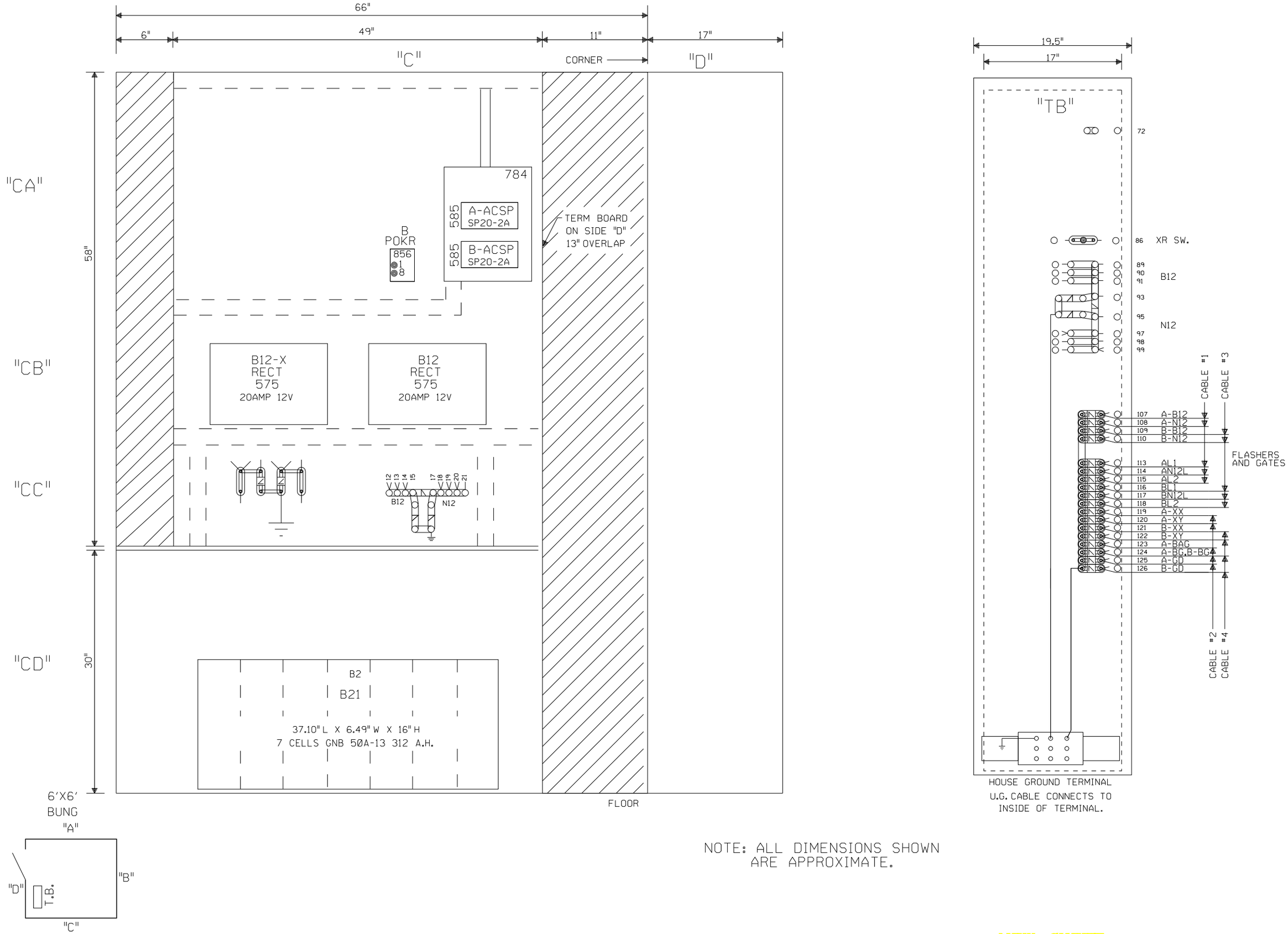

NOTE: ALL DIMENSIONS SHOWN
ARE APPROXIMATE.

NEW SHEET

Designed: 11/3/10 INSTALL FLASHERS AND GATES WITH CWT AT M.P. 54.61 Rec#: WO#: 07035 IS: /RLT / /BDF/JTB	MODIFICATION LEVEL		UNION PACIFIC QUALITY PRODUCTIVITY SAFETY SIGNAL DESIGN	Date: 11/03/10 Des: BDF Chk: RLT AFE: 07035	UNION PACIFIC RAILROAD SPEER, ILLINOIS CH 13 PEORIA SUBDIVISION Office of Sr AVP Engineering - Signal/TCO Omaha, Nebraska	Sh.: 8 DOT 175659B MP: 54.61 ID: STL5461.8X
	Q. A. LAST LEVEL CHECKED	DT				
	LAST LEVEL MOD THIS TYPICAL	DT				
	LAST LEVEL BY DESIGNER	DU				
	CHANGED FROM TYPICAL? REV 05.24.10 4K GFC.9	Y				