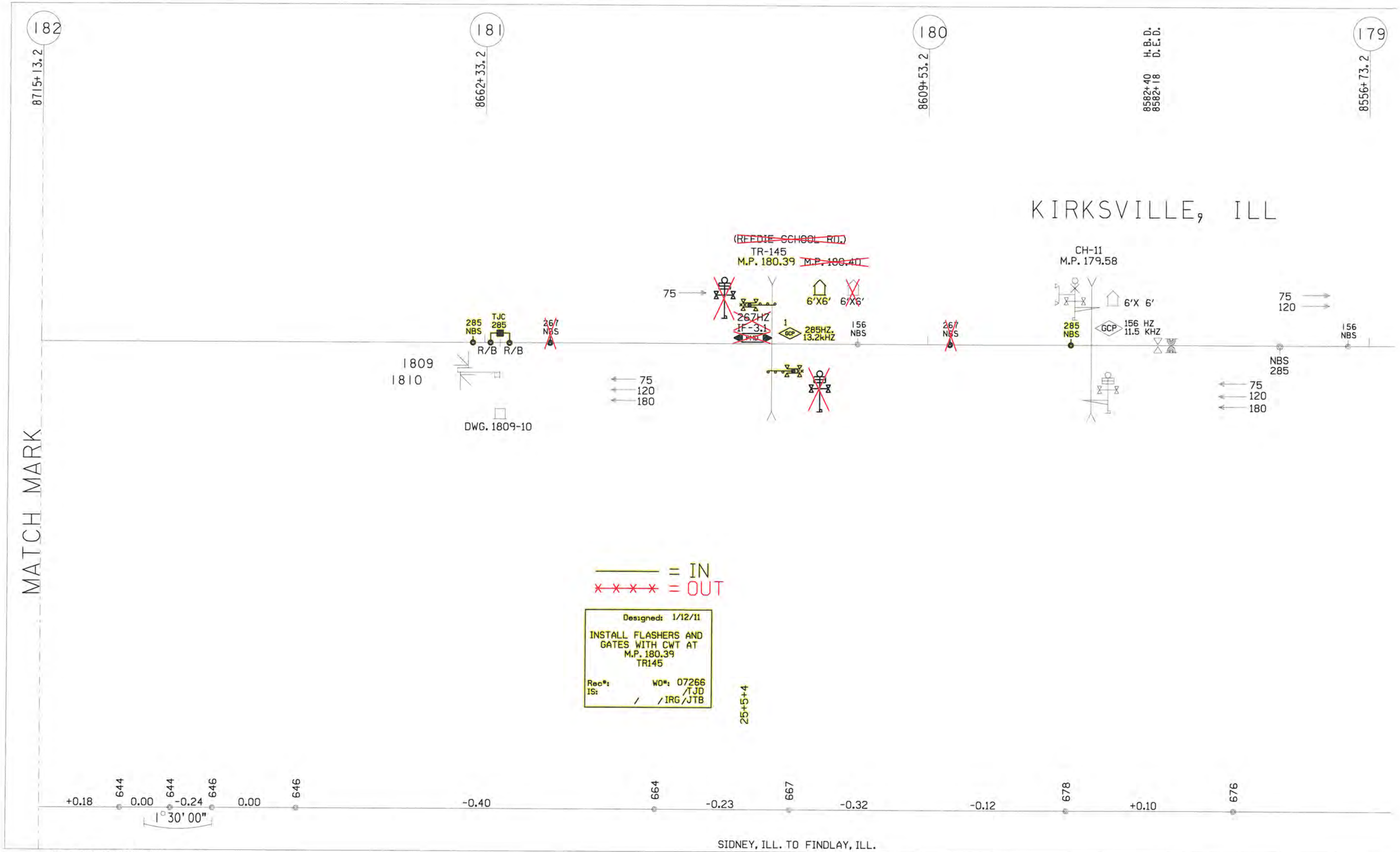

ID= 301132182.MAP

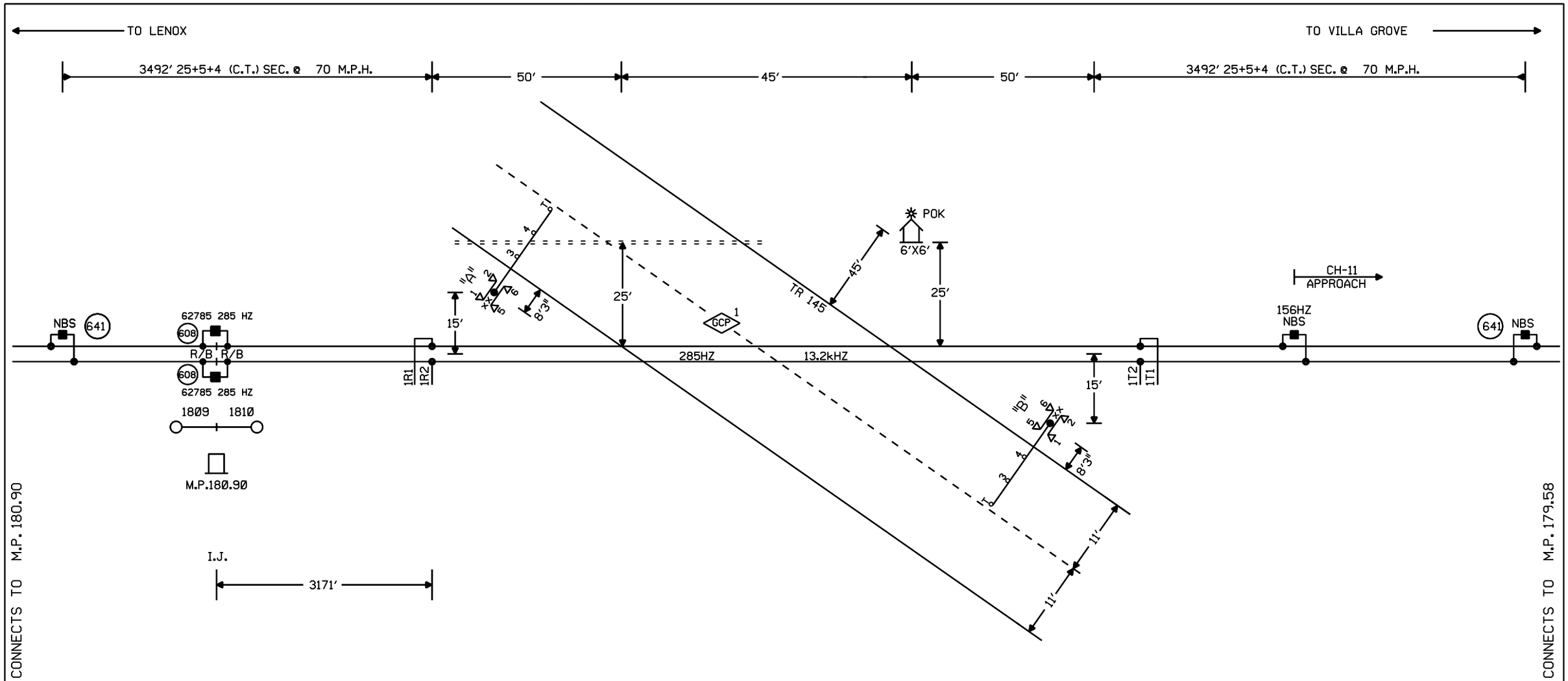

NOTES:

⊗= TWISTED WIRES
INSULATED 1 TWIST PER FT.
ALL TRACK WIRES 2C. #6

TRANSMITTER AND RECEIVER LEADS
TO BE SEPARATED BY AT LEAST 12" IN TRENCH,
LENGTHS SHOULD NOT EXCEED MANUFACTURES
RECOMMENDATION.

TOP OF FOUNDATION TO BE AT SAME ELEVATION
AS THE SURFACE OF THE TRAVELED WAY & NO
MORE THAN 4" ABOVE THE SURFACE OF THE GROUND.

ALL BUNGALOW WIRING TO BE #16 AWG FLEX
UNLESS OTHERWISE SPECIFIED EXCEPT ALL GROUND
WIRE TO BE #6 AWG FLEX OR LARGER.

ALL WIRING IN GATE MECHANISM TO BE #10 "AWG FLEX".

REFER TO UP STANDARD DWG FOR BUNGALOW GROUNDING.

PORTABLE GENERATOR EXTENSION CORD
FOR 240V TO 240V IS PROVIDED AS WELL
AS A 120V TO 240V ADAPTER.

ALL LIGHTS TO BE 12" ROUNDELS.

= = = = = = 4" X 70' CONDUIT

LIGHTS: LED LIGHTS

GATE A: 19'
GATE B: 19'

xx = BELL

W(S) ←——○——→ E(N)

CONSTRUCTION NOTES:

1. RELOCATE POWER TO PROVIDE CLEARANCE FOR GATE "B".

NEW SHEET

Designed: 1/12/11

INSTALL FLASHERS AND GATES WITH CWT AT M.P. 180.39 TR145

Rec#: WO#: 07266
IS: /TJD
/ /IRG /JTB

MODIFICATION LEVEL	
O. A. LAST LEVEL CHECKED	DU
LAST LEVEL MOD THIS TYPICAL	DU
LAST LEVEL BY DESIGNER	DU
CHANGED FROM TYPICAL?	Y

REV 01.24.11 4K 1TKBG.1

UNION PACIFIC
QUALITY PRODUCTIVITY SAFETY
SIGNAL DESIGN

Date: 01/12/11
Des: IRG
Chk: TJD
AFE: 07266

UNION PACIFIC RAILROAD
SULLIVAN, ILLINOIS
TR 145
PANA SUBDIVISION
Office of Sr AVP Engineering - Signal/TCO Omaha, Nebraska

Sh.: 1
DOT 167279Y
MP: 180.39
ID: 030118039.1X

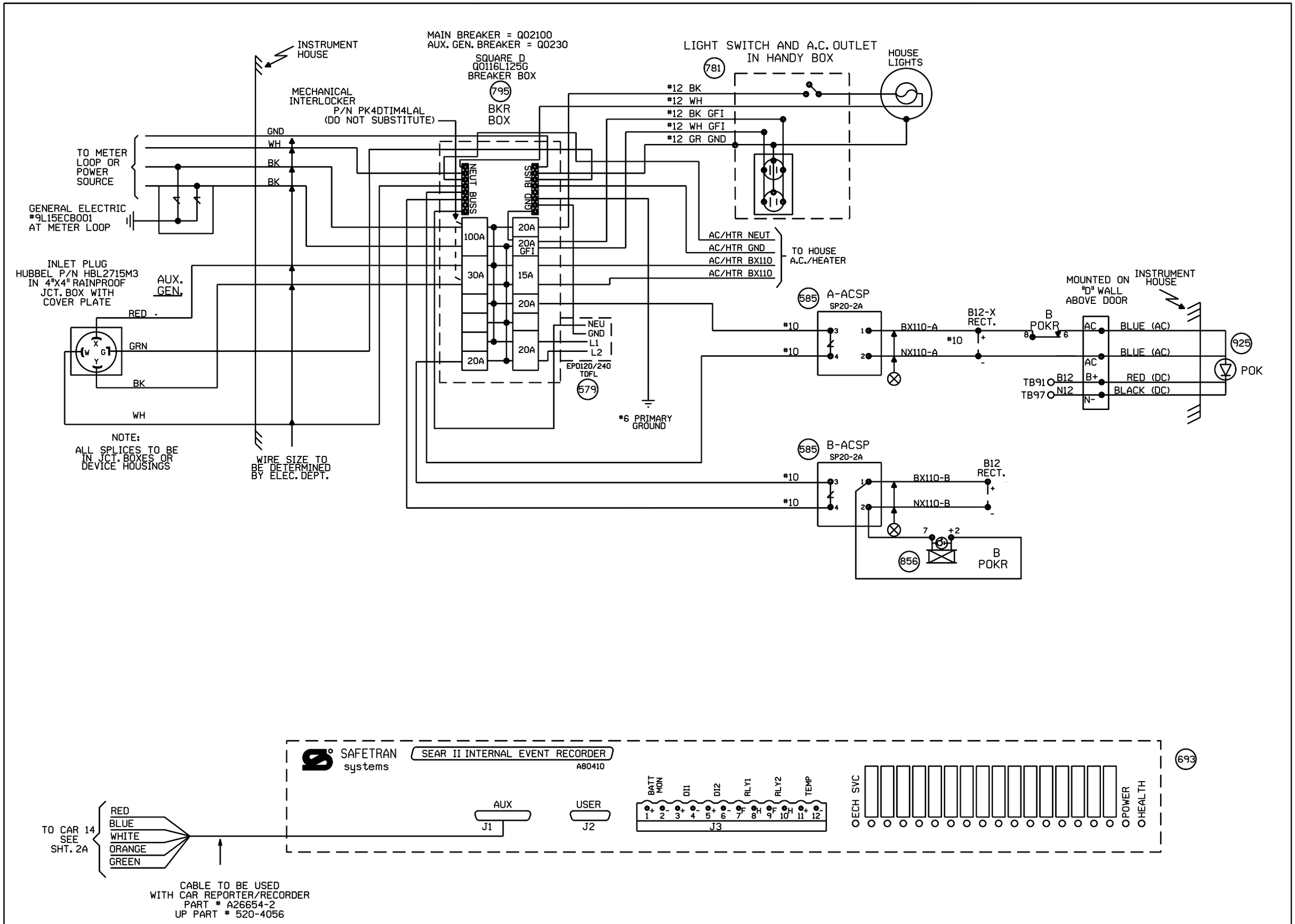

NEW SHEET

Designed: 1/12/11 INSTALL FLASHERS AND GATES WITH CWT AT M.P. 180.39 TR145 Rec#: WO#: 07266 IS: /TJD / /IRG/JTB	MODIFICATION LEVEL Q.A. LAST LEVEL CHECKED DU LAST LEVEL MOD THIS TYPICAL DU LAST LEVEL BY DESIGNER DU CHANGED FROM TYPICAL? Y REV 01.24.11 4K SEARAC.2	UNION PACIFIC QUALITY PRODUCTIVITY SAFETY SIGNAL DESIGN	Date: 01/12/11 Des: IRG Chk: TJD AFE: 07266	UNION PACIFIC RAILROAD SULLIVAN, ILLINOIS TR145 PANA SUBDIVISION Office of Sr AVP Engineering - Signal/TCO Omaha, Nebraska	Sh.: 2 DOT 167279Y MP: 180.39 ID: 030118039.2X

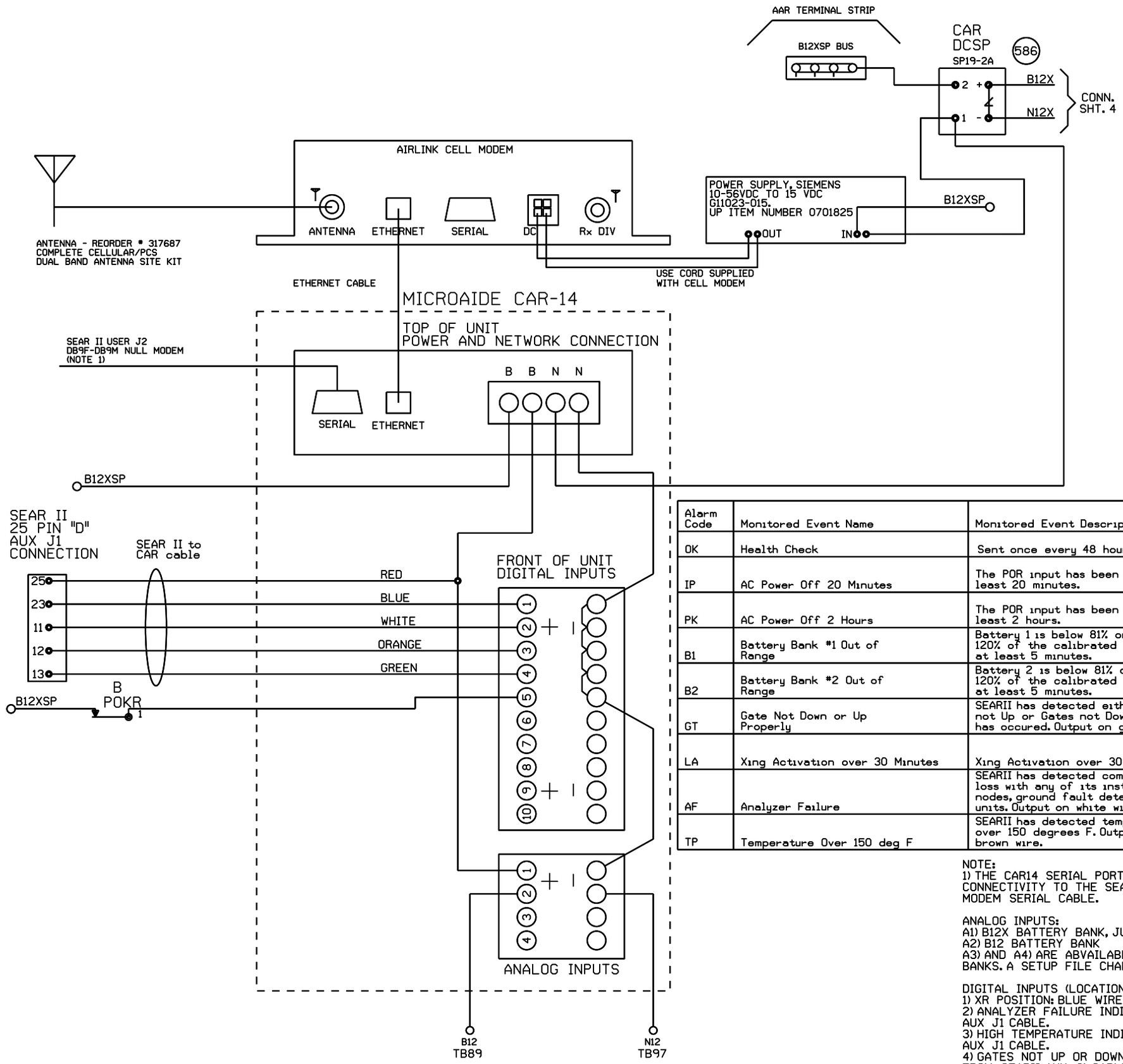

Alarm Code	Monitored Event Name	Monitored Event Description	Alarm Cleared
OK	Health Check	Sent once every 48 hours.	
IP	AC Power Off 20 Minutes	The POR input has been down for at least 20 minutes.	The POR input comes back on for at least 5 minutes after an AC Power Off Alarm
PK	AC Power Off 2 Hours	The POR input has been down for at least 2 hours.	The POR input comes back on for at least 5 minutes after an AC Power Off Alarm
B1	Battery Bank #1 Out of Range	Battery 1 is below 81% or above 120% of the calibrated value for at least 5 minutes.	Battery 1 is within acceptable range for at least 5 minutes.
B2	Battery Bank #2 Out of Range	Battery 2 is below 81% or above 120% of the calibrated value for at least 5 minutes.	Battery 2 is within acceptable range for at least 5 minutes.
GT	Gate Not Down or Up Properly	SEARII has detected either a Gates not Up or Gates not Down alarm has occured. Output on green wire.	The Gate Up or Gates Down indications indicated true after a Gate Not Down or Gate Not Up alarm was triggered.
LA	Xing Activation over 30 Minutes	Xing Activation over 30 Minutes	Crossing has recovered after a Long Activation Alarm had occured.
AF	Analyzer Failure	SEARII has detected communication loss with any of its installed echelon nodes, ground fault detectors, or TSS units. Output on white wire.	Analyzer has recovered after an analyzer failure.
TP	Temperature Over 150 deg F	SEARII has detected temperature over 150 degrees F. Output on brown wire.	Temperature sensor inside SEAR detects temperature is OK after a Hi-Temp alarm.

NOTE:
1) THE CAR14 SERIAL PORT IS VAILABLE TO ADD REMOTE CONNECTIVITY TO THE SEARII. USE A DB9F TO DB9M NULL MODEM SERIAL CABLE.

ANALOG INPUTS:
A1) B12X BATTERY BANK, JUMPERED FOR CAR14 POWER INPUTS
A2) B12 BATTERY BANK
A3) AND A4) ARE ABVAILABLE TO MONITOR ADDITIONAL BATTERY BANKS. A SETUP FILE CHANGE IS REQUIRED.

DIGITAL INPUTS (LOCATIONS WITH SEARII)
1) XR POSITION: BLUE WIRE FROM SEARII AUX J1 CABLE
2) ANALYZER FAILURE INDICATION: WHITE WIRE FROM SEARII AUX J1 CABLE.
3) HIGH TEMPERATURE INDICATION: ORANGE WIRE FROM SEARII AUX J1 CABLE.
4) GATES NOT UP OR DOWN PROPERLY INDICATION: GREEN WIRE FROM SEARII AUX J1 CABLE.
5) POWER OFF INDICATION: POR

NEW SHEET

Designed: 1/12/11

INSTALL FLASHERS AND GATES WITH CWT AT M.P. 180.39 TR145

Rec#:
IS:
WO#: 07266
/TJD
/IRG /JTB

MODIFICATION LEVEL	
Q. A. LAST LEVEL CHECKED	DU
LAST LEVEL MOD THIS TYPICAL	DU
LAST LEVEL BY DESIGNER	DU
CHANGED FROM TYPICAL?	Y

REV 01.24.11 4K ACDCCAR14SII.3

UNION PACIFIC
QUALITY PRODUCTIVITY SAFETY
SIGNAL DESIGN

Date: 01/12/11
Des: IRG
Chk: TJD
AFE: 07266

UNION PACIFIC RAILROAD
SULLIVAN, ILLINOIS
TR145
PANA SUBDIVISION
Office of Sr AVP Engineering - Signal/TCO Omaha, Nebraska

Sh.: 2A
DOT 167279Y
MP: 180.39
ID: 030118039.2AX

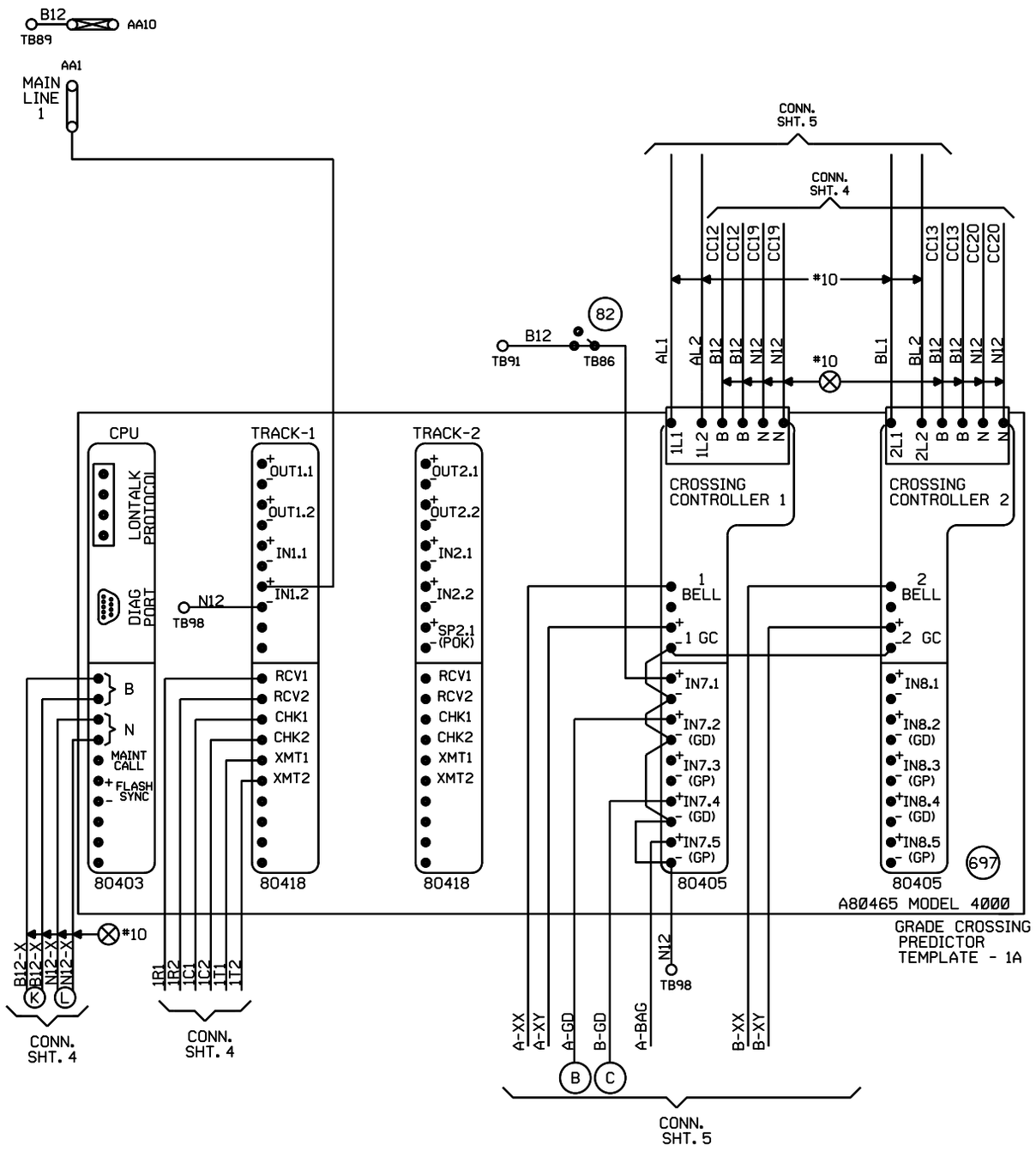

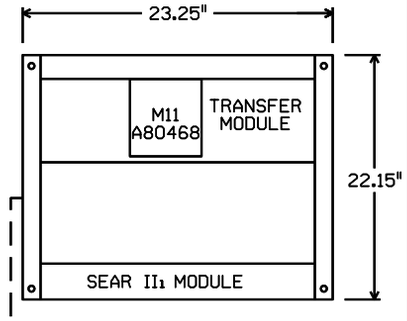

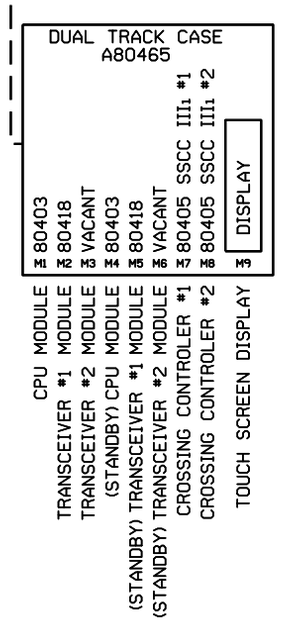

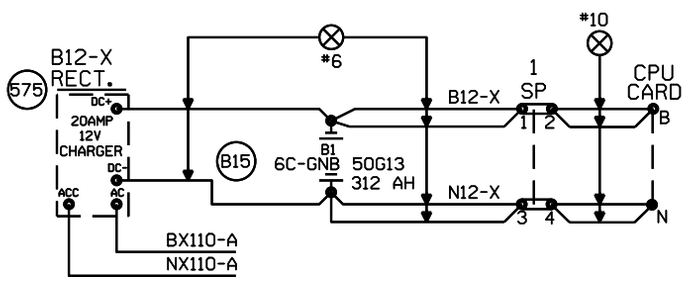

"Mf" FREQUENCY (HZ)	MAXIMUM TRANSMIT WIRE LENGTH (FEET)
86	100
114	125
156	150
211	200
285-970	250

NOTE:
EACH TRANSMITTER TO RAIL WIRE FROM XMT1 AND XMT2 MUST NOT EXCEED THE MAXIMUM LENGTH SPECIFIED IN THE TABLE SHOWN. THE RECEIVER WIRE LENGTH IS NOT CRITICAL. DOES NOT APPLY TO 6 TRACK WIRE APPLICATION.

NEW SHEET

Designed: 1/12/11
INSTALL FLASHERS AND GATES WITH CWT AT M.P. 180.39 TR145
Rec#: WO#: 07266
IS: TJD / IRG / JTB

MODIFICATION LEVEL	
Q. A. LAST LEVEL CHECKED	DU
LAST LEVEL MOD THIS TYPICAL	DU
LAST LEVEL BY DESIGNER	DU
CHANGED FROM TYPICAL?	Y

rev 01.24.11 4K 2TKGF.3

UNION PACIFIC
QUALITY PRODUCTIVITY SAFETY
SIGNAL DESIGN

Date: 01/12/11
Des: IRG
Chk: TJD
AFE: 07266

UNION PACIFIC RAILROAD
SULLIVAN, ILLINOIS
TR145
PANA SUBDIVISION
Office of Sr AVP Engineering - Signal/TCO Omaha, Nebraska

Sh.: 3
DOT 167279Y
MP: 180.39
ID: 030118039.3X