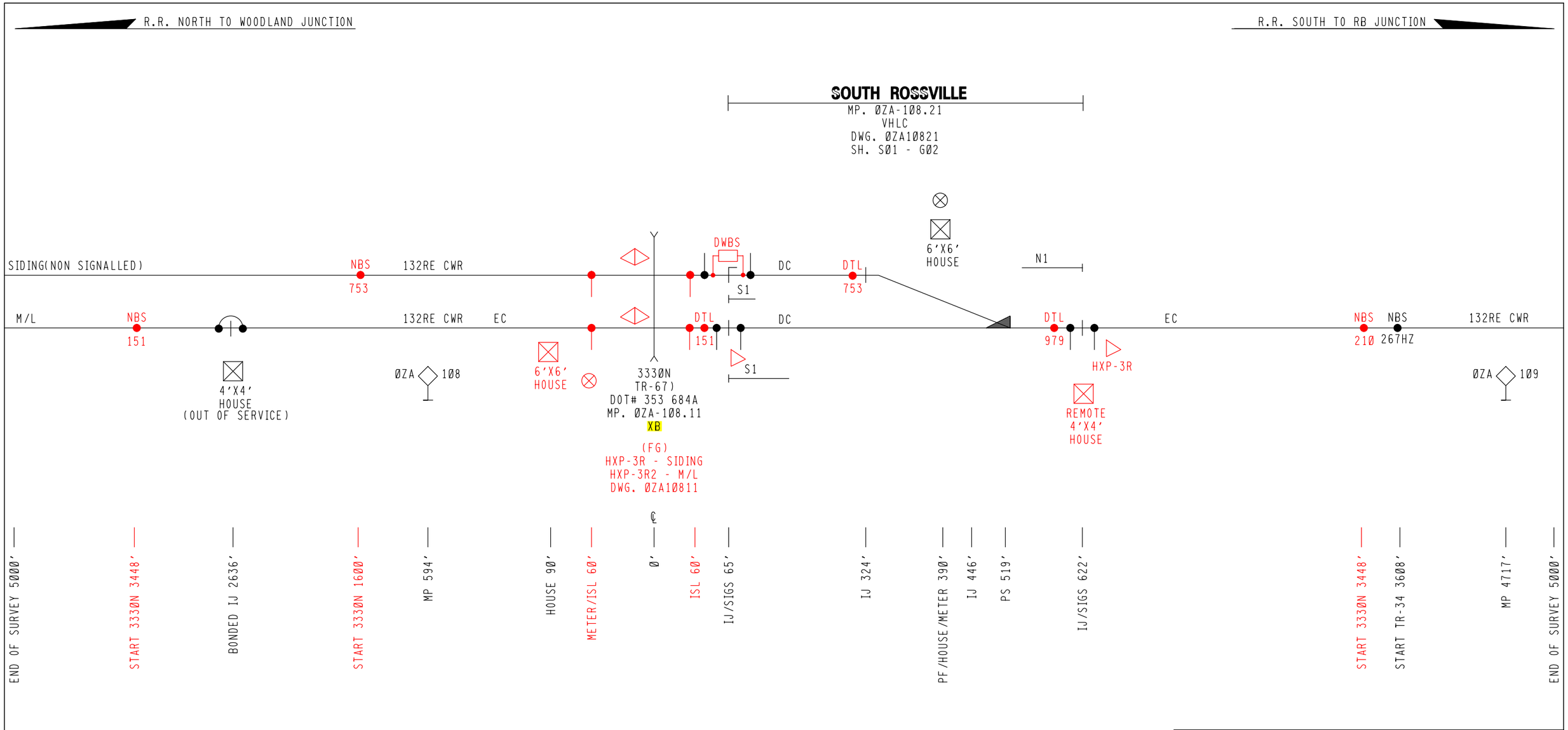

PROPOSED TRACK LAYOUT

CSX TRANSPORTATION
RAIL TRANSPORT GROUP ENGINEERING
COMMUNICATIONS AND SIGNALS

ALVIN, (VERMILION), IL

3333ØN (TR-67)
DOT# 353 684A
MP. ØZA-1Ø8.11
OP# ILØ311
CHICAGO DIVISION/WOODLAND SUBDIVISION

SCALE	FILE	DIGITIZED	DATE
NONE	ØZA1Ø811.HØ4	XRL/MJP	Ø9-Ø1-1Ø

REV. Ø9-14-1Ø

xorail
XORAIL
5Ø11 GATE PARKWAY, BUILDING 1ØØ
SUITE 4ØØ
JACKSONVILLE, FL 32256

IL2010020 / CXS1026328

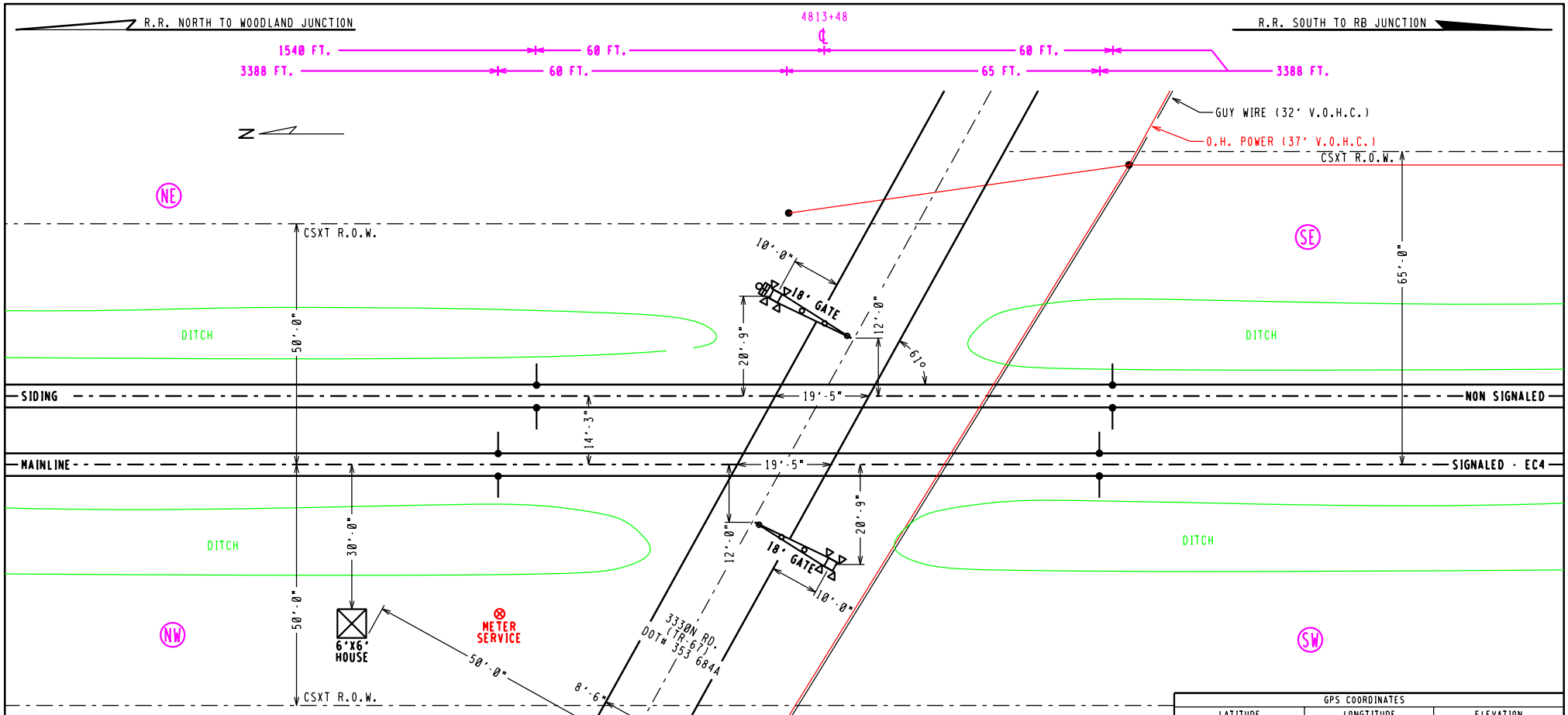

APPROACH LENGTHS TABLE DC, AFO, TYPE C, MOTION, CWT, OR OTHER	NORTHWARD M/L CWT	SOUTHWARD M/L CWT	NORTHWARD SIDING CWT	SOUTHWARD SIDING CWT
STANDARD MINIMUM WARNING TIME IN SECONDS	25	25	25	25
ROADWAY GATE TIME IN SECONDS	5	5	5	5
CLEARANCE TIME IN SECONDS	2	2	2	2
DOT TRAFFIC LIGHT SIMULTANEOUS PREEMPT TIME IN SECONDS✱	0	0	0	0
DESIGNED WARNING TIME FOR TRAINS AT TIME TABLE SPEED	32 SEC.	32 SEC.	32 SEC.	32 SEC.
DOT TRAFFIC LIGHT ADVANCE PREEMPT TIME IN SECONDS ✱	0	0	0	0
CONTROL EQUIPMENT DECISION TIME IN SECONDS	4	4	4	4
DESIGNED DETECTION TIME FOR TRAINS AT TIME TABLE SPEED	36 SEC.	36 SEC.	36 SEC.	36 SEC.
TIME TABLE MAXIMUM TRAIN SPEED IN MILES PER HOUR	60	60	25	25
BUFFER SPEED IN MILES PER HOUR	5	5	5	5
TOTAL WARNING SYSTEM DESIGN SPEED IN MILES PER HOUR	65	65	30	30
APPROACH DISTANCE TO ISLAND EDGE IN FEET	3388	3388	1540	1540
HALF WIDTH OF ISLAND IN FEET	60	65	60	60
APPROXIMATE MILE POSTS FOR APPROACH CIRCUIT	107.46	108.76	107.81	108.41

✱AUTHORIZING AGENCY: NONE
✱DATE OF REQUIREMENT: NONE
✱AMOUNT OF TIME (SEC.): NONE

GPS COORDINATES		
LATITUDE N40°20'49"	LONGTITUDE W87°38'01"	ELEVATION 652 FT.

PROPOSED CROSSING LAYOUT

CSX TRANSPORTATION
RAIL TRANSPORT GROUP ENGINEERING
COMMUNICATIONS AND SIGNALS

ALVIN, (VERMILION), IL
3330N RD. (TR-67)
DOT# 353 684A
MP. 0ZA-108.11
OP# IL0311
CHICAGO DIVISION/WOODLAND SUBDIVISION

SCALE	FILE	DIGITIZED	DATE
1" = 20'	0ZA10811.H01	XRL/MJP	09-01-10

REV. 07-19-11
REV. 09-14-10

XORAIL
5011 GATE PARKWAY, BUILDING 100
SUITE 400
JACKSONVILLE, FL 32256

IL2010020 / CXS1026328

INDEX

CONTENTS

SH. NO.		REVISION NO. 1	2	3	4	5	6	7	8	9
I01	INDEX AND REVISIONS	╱								
S01	TRACK AND SIGNAL PLAN	╱								
E01	POWER DISTRIBUTION	╱								
C01	CROSSING DETECTION CIRCUITRY (11-1 CWU)	╱								
C02	DETECTION DEVICE PROGRAM (11-1 CWU)	╱								
C03	CROSSING DETECTION CIRCUITRY (11-2 CWU)	╱								
C04	DETECTION DEVICE PROGRAM (11-2 CWU)	╱								
C05	CROSSING WARNING DEVICE GATE CIRCUITRY	╱								
C06	CROSSING WARNING DEVICE LIGHT CIRCUITRY	╱								
C07	RECORDER AND DTMF CONTROLLER CIRCUITS	╱								
C08	RECORDER PROGRAM	╱								

╱ = DESIGN COMPLETED

╳ = REVISION COMPLETED

REVISIONS

REV. NO.	PROJECT NO.	DESIGN DATE	IN SERVICE DATE	REVISION DATE
1	IL2010020	07-19-11		

TO BE COMPLETED ON A.I.S.

= NOTE

NEW WORK

CXV1128605 IL2010020

07-19-11 XRL/R.HARSHA/E.HORNE

xorail

CSX TRANSPORTATION

RAIL TRANSPORT GROUP ENGINEERING
COMMUNICATIONS AND SIGNALS

3330N RD. (TR-67) 353684A

INDEX AND REVISIONS
ALVIN, IL M.P. 0ZA-108.11

PMD3RCPML.I01
REV. 09-30-10

DESIGNED	DIGITIZED	CHECKED	DATE
XRL/RHA	XRL/RHA	XRL	07-19-11

DESIGN DATE	REV. NO.	DRAWING	SHEET NO	FILE	SHEET
07-19-11	1	-----	-----	0ZA10811	I01

REVISIONS	
04·09·2001 SWE	IL1994040
08·09·02 SWE	IL2001025
02·15·08 SWE	IL2006012

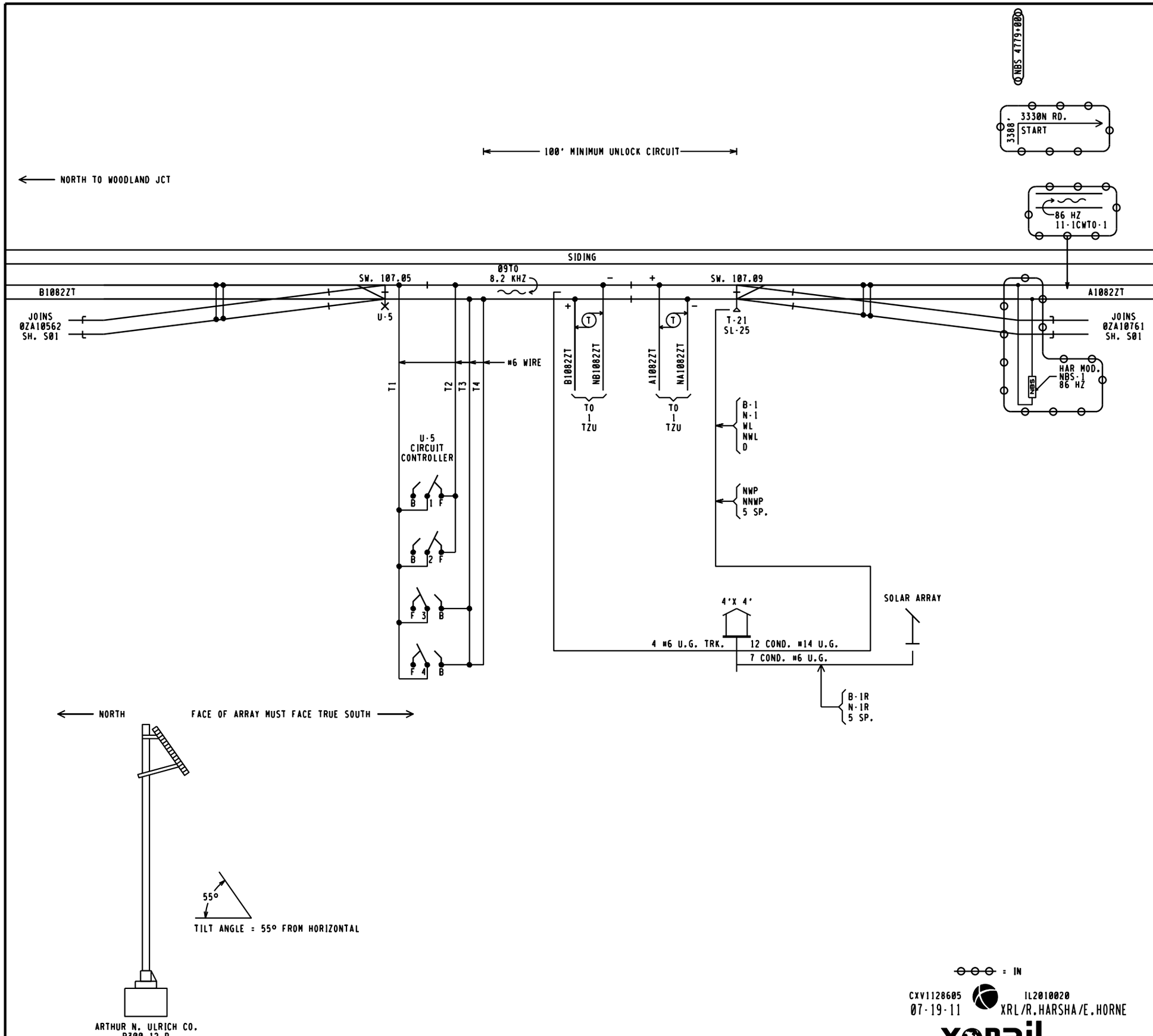

= IN

CXV1128605
07·19·11

IL2010020
XRL/R.HARSHA/E.HORNE

xorail

CSX TRANSPORTATION
RAIL TRANSPORT GROUP ENGINEERING
COMMUNICATIONS AND SIGNALS

WOODLAND JCT TO RB JUNCTION

ELECTRIC LOCK

TRACK AND SIGNAL PLAN

ALVIN, IL M.P. 0ZA·107.09

DESIGNED	DIGITIZED	CHECKED	DATE
SWE	SWE	SWE	06·28·96

DRAWING	SHEET NO	NEXT SH	NEXT FILE	NEXT SH	FILE	SHEET
.....	.....	.....	0ZA10709	E01	0ZA10709	S01

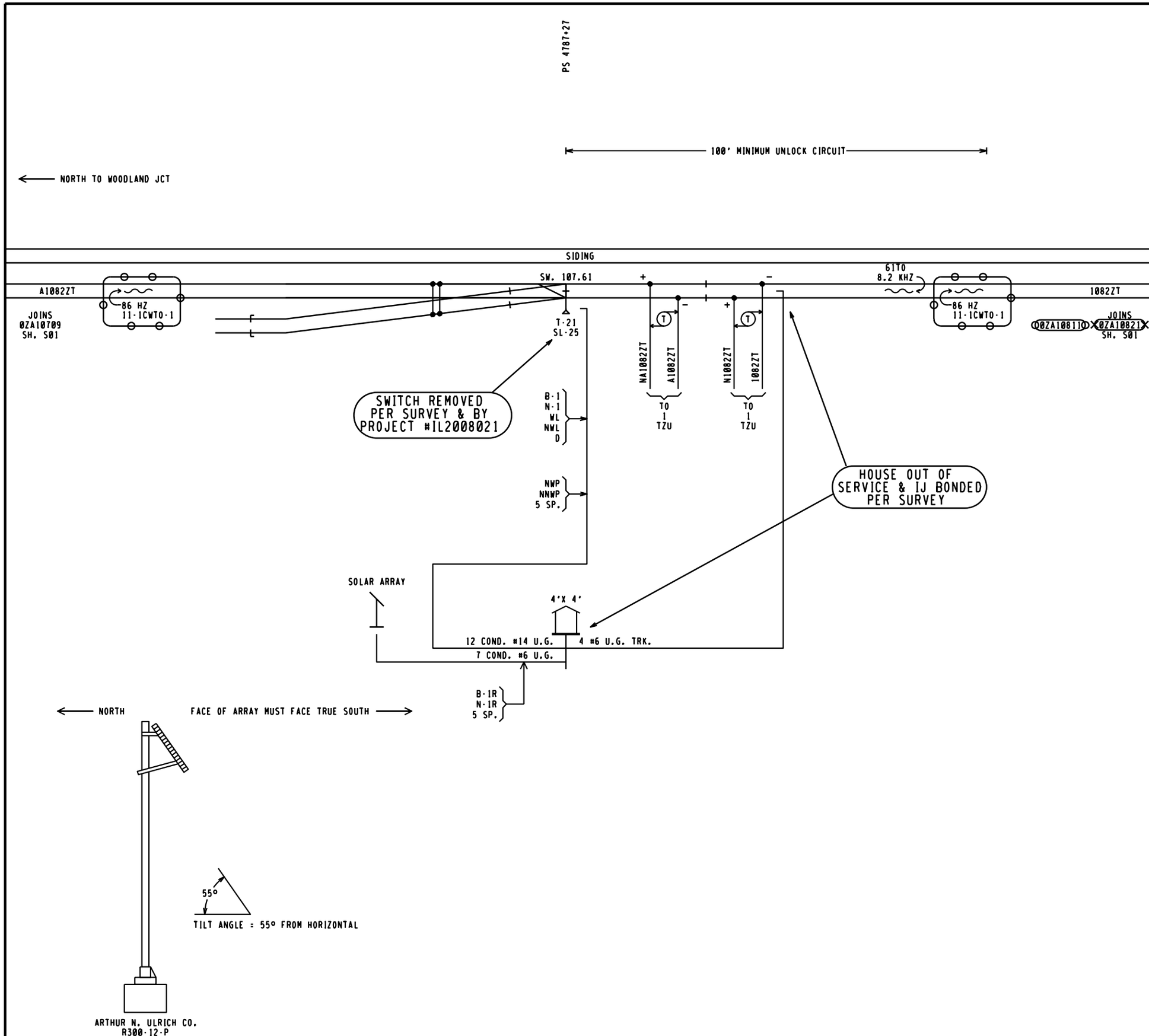

REVISIONS	
04-09-2001 SWE	IL1994040
08-09-02 SWE	IL2001025
02-15-08 SWE	IL2006012

= NOTE
= IN
= OUT

CXV1128605 IL2010020
07-19-11 XRL/R.HARSHA/E.HORNE

xorail

CSX TRANSPORTATION
RAIL TRANSPORT GROUP ENGINEERING
COMMUNICATIONS AND SIGNALS

WOODLAND JCT TO RB JUNCTION
ELECTRIC LOCK
TRACK PLAN
ALVIN, IL M.P. 0ZA-107.61

DESIGNED	DIGITIZED	CHECKED	DATE
SWE	SWE	SWE	06-28-96

DRAWING	SHEET NO	NEXT SH	NEXT FILE	NEXT SH	FILE	SHEET
.....	.....	.....	0ZA10761	E01	0ZA10761	S01

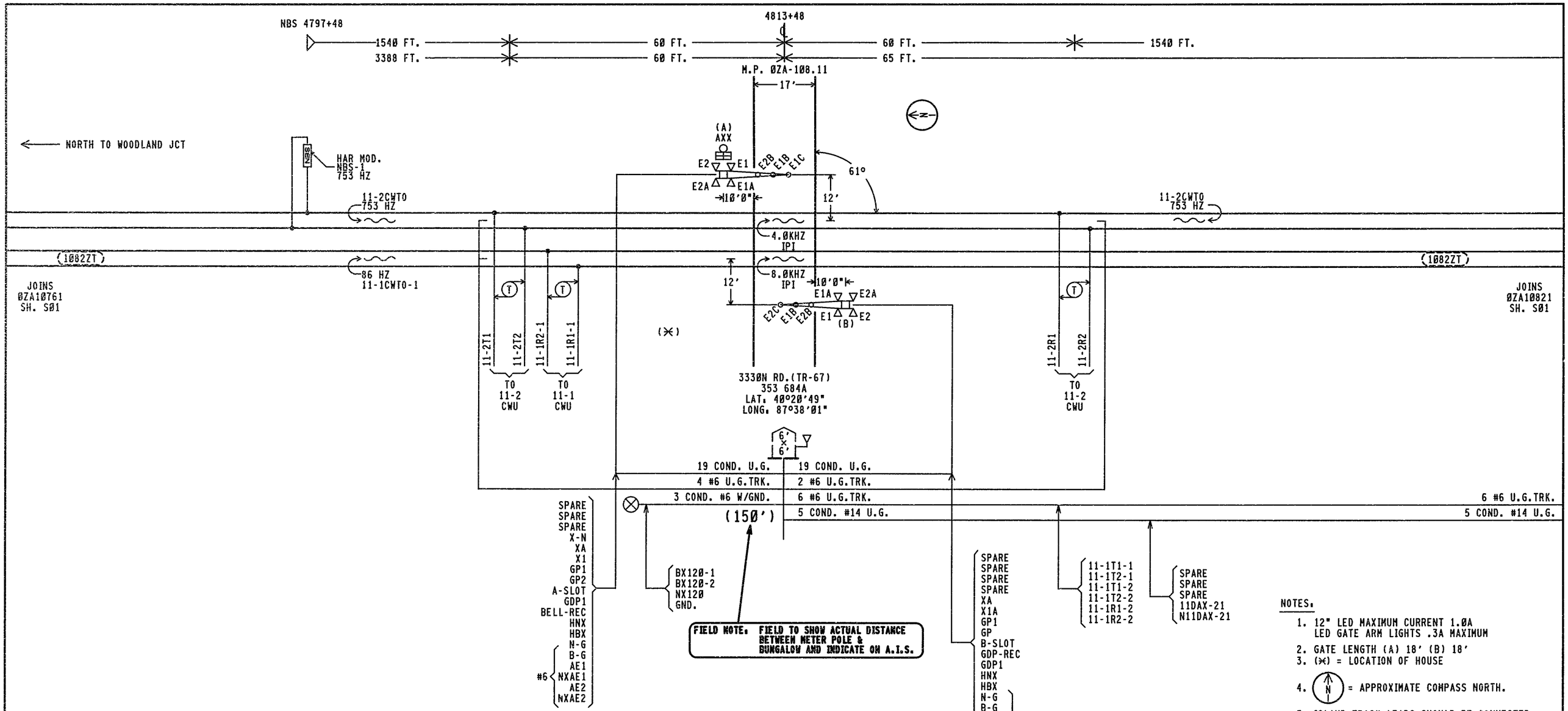

NOTES:

1. 12" LED MAXIMUM CURRENT 1.0A
   LED GATE ARM LIGHTS .3A MAXIMUM
2. GATE LENGTH (A) 18' (B) 18'
3. (⊗) = LOCATION OF HOUSE
4. (N) = APPROXIMATE COMPASS NORTH.
5. ISLAND TRACK LEADS SHOULD BE CONNECTED 50 FEET FROM ROAD EDGE BUT ON NARROW ROADS (20' OR LESS) ISLAND LENGTH SHALL BE 120 FEET.
6. WARNING SYSTEM APPROACH CIRCUIT DISTANCES ARE TO BE MEASURED FROM THE ISLAND TRACK CONNECTIONS.

APPROACH LENGTHS TABLE DC, AFO, TYPE C, MOTION, CWT, OR OTHER	NORTHWARD M/L CWT	SOUTHWARD M/L CWT	NORTHWARD SIDING CWT	SOUTHWARD SIDING CWT
STANDARD MINIMUM WARNING TIME IN SECONDS	25	25	25	25
ROADWAY GATE TIME IN SECONDS	5	5	5	5
CLEARANCE TIME IN SECONDS	2	2	2	2
DOT TRAFFIC LIGHT SIMULTANEOUS PREEMPT TIME IN SECONDS ✳	0	0	0	0
DESIGNED WARNING TIME FOR TRAINS AT TIME TABLE SPEED	32 SEC.	32 SEC.	32 SEC.	32 SEC.
DOT TRAFFIC LIGHT ADVANCE PREEMPT TIME IN SECONDS ✳	0	0	0	0
CONTROL EQUIPMENT DECISION TIME IN SECONDS	4	4	4	4
DESIGNED DETECTION TIME FOR TRAINS AT TIME TABLE SPEED	36 SEC.	36 SEC.	36 SEC.	36 SEC.
TIME TABLE MAXIMUM TRAIN SPEED IN MILES PER HOUR	60	60	25	25
BUFFER SPEED IN MILES PER HOUR	5	5	5	5
TOTAL WARNING SYSTEM DESIGN SPEED IN MILES PER HOUR	65	65	30	30
APPROACH DISTANCE TO ISLAND EDGE IN FEET	3388	3388	1540	1540
HALF WIDTH OF ISLAND IN FEET	60	65	60	60
APPROXIMATE MILE POSTS FOR APPROACH CIRCUIT	107.46	108.76	107.01	108.41

✳AUTHORIZING AGENCY: "NONE"
✳DATE OF REQUIREMENT: "NONE"
✳AMOUNT OF TIME (SEC.): "NONE"

= EXISTING
= NOTE

NEW WORK
CXV1128605 IL2010020
07-19-11 XRL/R.HARSHA/E.HORNE
xorail

2TRKPMD3RCPML.SØ1
REV. 09-30-10

CSX TRANSPORTATION
RAIL TRANSPORT GROUP ENGINEERING
COMMUNICATIONS AND SIGNALS

3330N RD. (TR-67) 353684A

TRACK AND SIGNAL PLAN
ALVIN, IL M.P. ØZA-108.11

DESIGNED	DIGITIZED	CHECKED	DATE
XRL/RHA	XRL/RHA	XRL	07-19-11

DESIGN DATE	REV. NO.	DRAWING	SHEET NO	FILE	SHEET
07-19-11	1	-----	-----	ØZA10811	SØ1

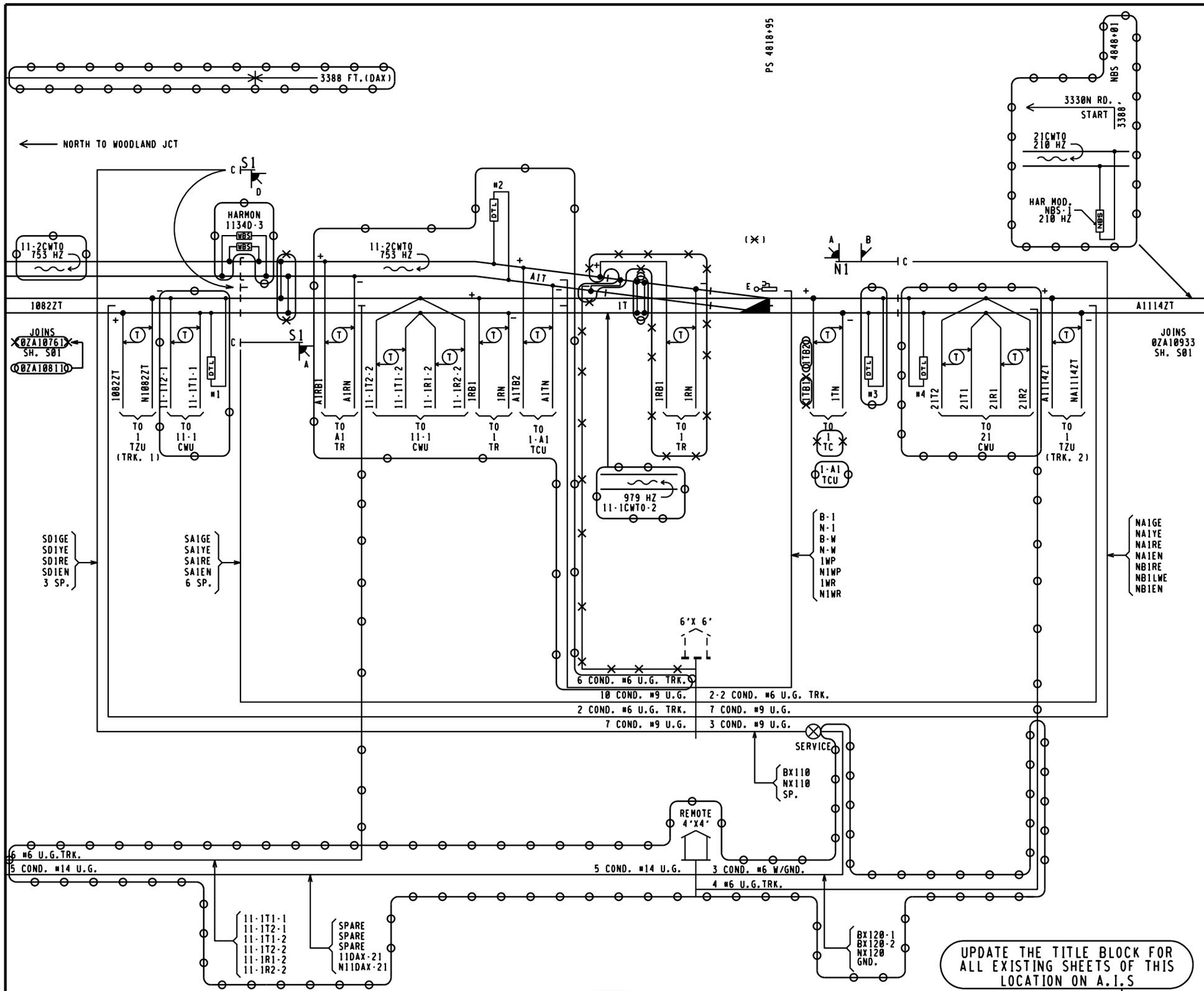

UPDATE THE TITLE BLOCK FOR ALL EXISTING SHEETS OF THIS LOCATION ON A.I.S

S.E. ROSSVILLE

CXV1128605 IL2010020
07-19-11 XRL/R.HARSHA/E.HORNE

xorail

REVISIONS	
04-09-2001 SWE	IL1994040
02-15-08 SWE	IL2006012

NOTE.

1. (X) = LOCATION OF HOUSE
2. DTL #1
   HARMON FSS-1A 86 HZ MULTI FREQ. NBS
   HPN 250849-000
   HARMON FSS LOAD 3500'
   HPN 227032-013
3. DTL #2
   HARMON FSS-1/2C 753 HZ MULTI FREQ.NBS
   HPN 250849-002
   HARMON FSS LOAD 1250'
   HPN 227032-004
4. DTL #3
   HARMON FSS-1/2C 979 HZ MULTI FREQ.NBS
   HPN 250849-002
   HARMON FSS LOAD 1000'
   HPN 227032-003
5. DTL #4
   HARMON FSS-1A 210 HZ MULTI FREQ. NBS
   HPN 250849-000
   HARMON FSS LOAD 3000'
   HPN 227032-011

CSX TRANSPORTATION
RAIL TRANSPORT GROUP ENGINEERING
COMMUNICATIONS AND SIGNALS

WOODLAND JCT TO RB JUNCTION
S.E. ROSSVILLE
TRACK AND SIGNAL PLAN
ALVIN, IL M.P. 0ZA-108.21

DESIGNED	DIGITIZED	CHECKED	DATE
SWE	SWE	SWE	06-28-96

DRAWING	SHEET NO	NEXT SH	NEXT FILE	NEXT SH	FILE	SHEET
.....	.....	.....	0ZA10821	G01	0ZA10821	S01

TOP ROW

11DAXR			11-2 CWR			XR			XPR			GPR			EOR			POR		
12	F	B8	12	F	B8	12	FB	B8	22	F	B36	12	B	B82	12	FB	B81	12	FB	B62
15	F	C30	15	F	C30	15	FB	C30	25	F	C30	15	B	C30	15	FB	C30	15	FB	C30
22			22			22						22			32	FB		22	FB	
23	F		23	F		23						25			35	FB		25	FB	
25			25			25	F					32	F					32	F	
32			32			32						35	B					35		
35			35			35														

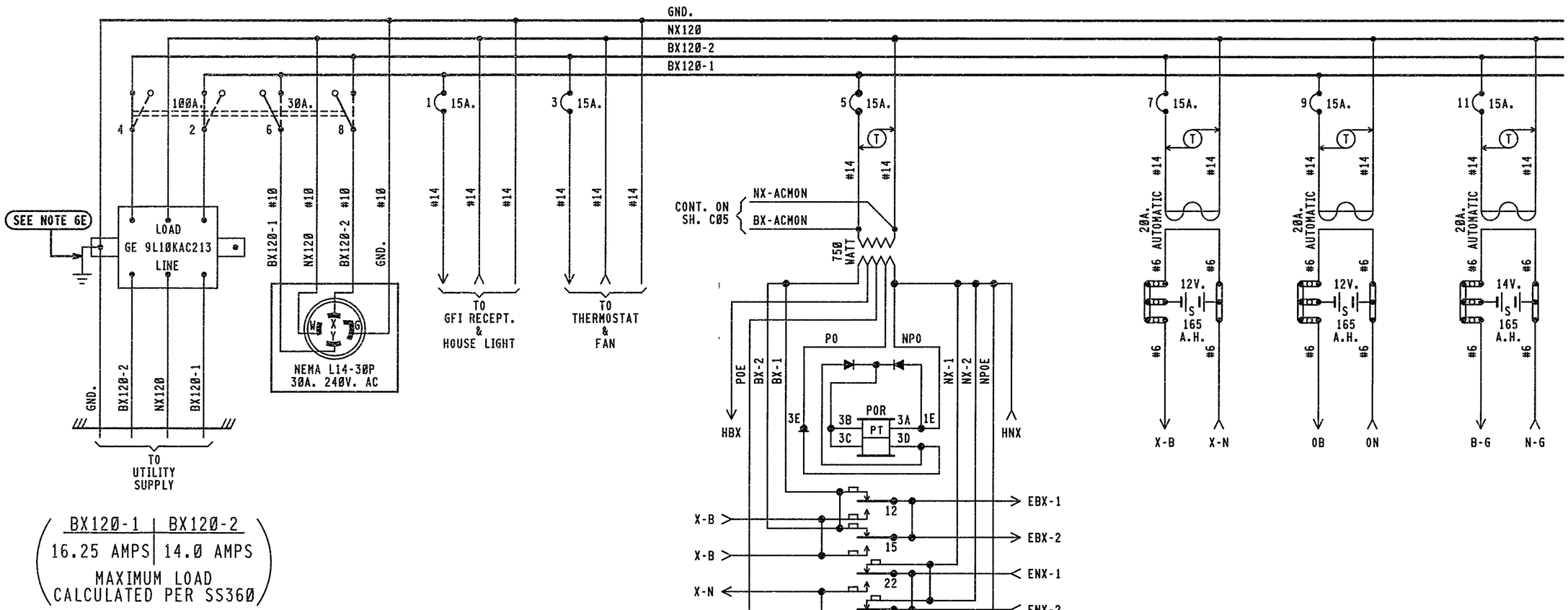

BX120-1	BX120-2
16.25 AMPS	14.0 AMPS

MAXIMUM LOAD
CALCULATED PER SS360

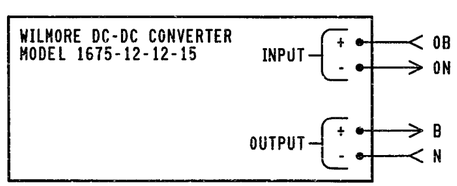

NOTES:

1 - REFERENCES ARE PER SCHS-13.
2 - ARRESTERS ARE PER SS382.
3 - SHELF RELAY PLACEMENT ON CONSIST CHART HAS NO SIGNIFICANCE.
4 - PLUG-IN RELAYS ARE VIEWED FROM THE FRONT OF RACK.
5 - BATTERY A.H. CAPACITY SHOWN IS THE MINIMUM REQUIREMENT.
6 - WIRING
  A - FEED TO ALL BUSSES, LIGHT CIRCUITS,MOTOR CIRCUITS TO BE #10 FLEX.
  B - 120-VOLT FEED FROM ENTRANCE TO POWER BUSS TO BE #10 FLEX.
  C - ALL TRACK WIRES TO BE #10 FLEX.
  D - ALL OTHERS TO BE #16 FLEX UNLESS NOTED.
  E - GROUND WIRE NOT NECESSARY WHEN GE ARRESTER IS MOUNTED ON GROUND PLANE OR METAL ENCLOSURE AFFIXED DIRECTLY TO BUNGALOW METALLIC STRUCTURAL MEMBER.
7 - CIRCUIT INTERRUPTERS 2 & 4 ARE MECHANICALLY INTERLOCKED WITH CIRCUIT INTERRUPTERS 6 & 8.

= NOTE

NEW WORK

CXV1128605 IL2010020
07-19-11 XRL/R.HARSHA/E.HORNE

xorail

6'X 6' RELAY HOUSE W/FARADAY SHIELD

CSX TRANSPORTATION
RAIL TRANSPORT GROUP ENGINEERING
COMMUNICATIONS AND SIGNALS

3330N RD. (TR-67) 353684A

POWER DISTRIBUTION
ALVIN, IL M.P. 0ZA-108.11

PMD3RCPML.E01H
REV. 09-30-10

DESIGNED	DIGITIZED	CHECKED	DATE
XRL/RHA	XRL/RHA	XRL	07-19-11

DESIGN DATE	REV. NO.	DRAWING	SHEET NO	FILE	SHEET
07-19-11	1	-----	-----	0ZA10811	E01

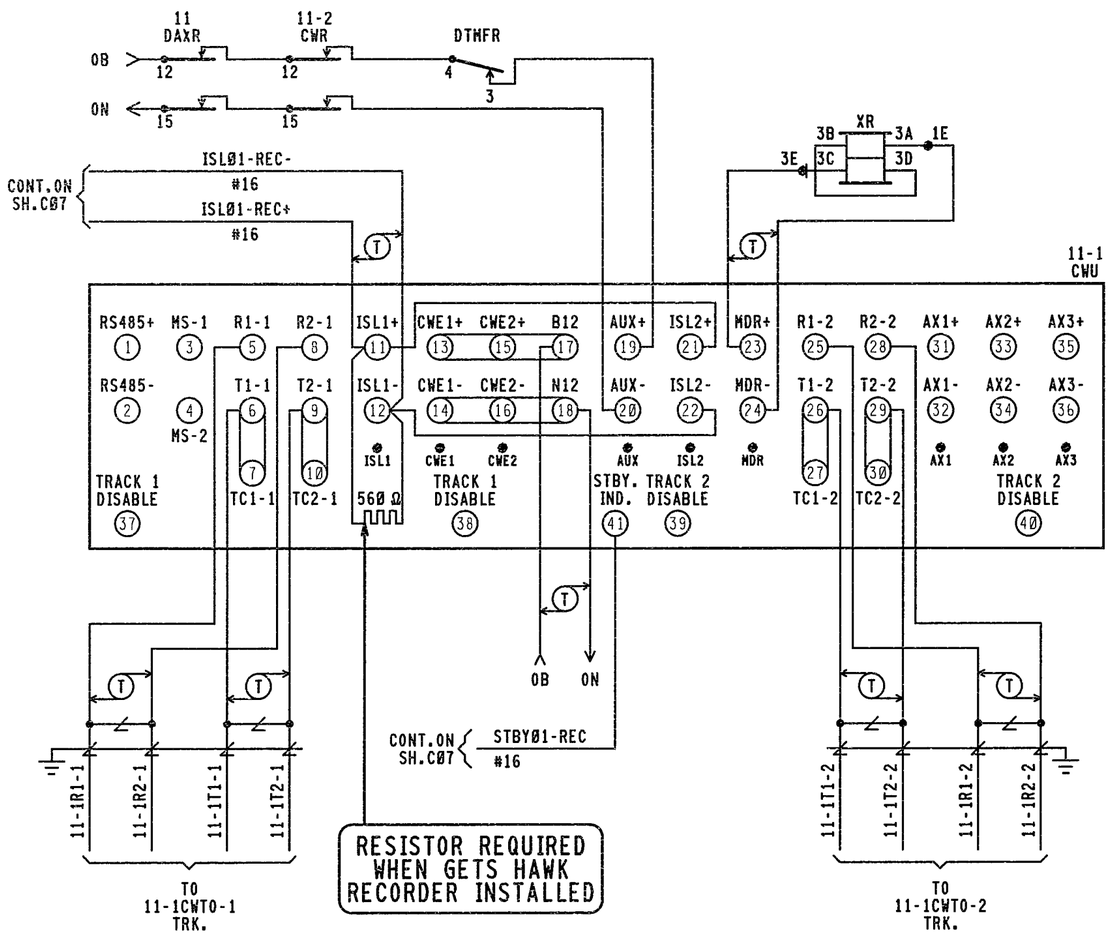

RESISTOR REQUIRED WHEN GETS HAWK RECORDER INSTALLED

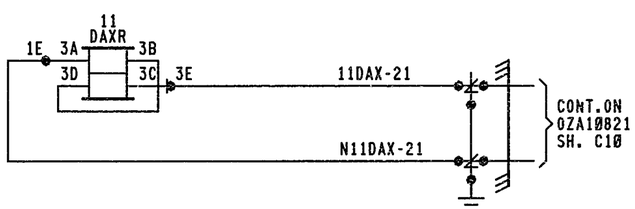

NORMAL SYSTEM

CABINET SWITCHES

MASTER/SLAVE SWITCHES ARE LOCATED IN THE UPPER BAY OF CABINET

THESE SWITCHES ARE LOCATED ON MOTHERBOARD

SYSTEM CONFIGURATION				
S13 & S14 DIP SWITCH POSITIONS				
SWITCH #	1	2	3	4
SWITCH POSITION	ON	OFF	OFF	OFF
APPROACH:	NORMAL		(NOT USED)	

	FREQUENCY SELECT					
TRACK 1	S11 & S12 DIP SWITCH POSITIONS 86 HZ					
	SWITCH #	1	2	3	4	5
	SWITCH POSITION	ON	OFF	OFF	OFF	OFF
TRACK 2	S15 & S16 DIP SWITCH POSITIONS 979 HZ					
	SWITCH #	1	2	3	4	5
	SWITCH POSITION	OFF	ON	OFF	ON	ON

STANDBY SYSTEM

CABINET SWITCHES

MASTER/SLAVE SWITCHES ARE LOCATED IN THE UPPER BAY OF CABINET

MASTER/SLAVE

MASTER SLAVE — S1 — TRACK 1

MASTER SLAVE — S2 — TRACK 2

THESE SWITCHES ARE LOCATED ON MOTHERBOARD

SYSTEM CONFIGURATION				
S5 & S6 DIP SWITCH POSITIONS				
SWITCH #	1	2	3	4
SWITCH POSITION	ON	OFF	OFF	OFF
APPROACH:	NORMAL		(NOT USED)	

	FREQUENCY SELECT					
TRACK 1	S3 & S4 DIP SWITCH POSITIONS 86 HZ					
	SWITCH #	1	2	3	4	5
	SWITCH POSITION	ON	OFF	OFF	OFF	OFF
TRACK 2	S7 & S8 DIP SWITCH POSITIONS 979 HZ					
	SWITCH #	1	2	3	4	5
	SWITCH POSITION	OFF	ON	OFF	ON	ON

RSI MODULE 226736-000 8.0KHZ

ISLAND FREQ.
8.0KHZ

TRACK 1 STANDBY RSI JUMPERS

LOS 0
LOS 1
LOS 2
FAULT 0
FAULT 1

RSI MODULE 226736-000 8.0KHZ

ISLAND FREQ.
8.0KHZ

TRACK 1 NORMAL RSI JUMPERS

LOS 0
LOS 1
LOS 2
FAULT 0
FAULT 1

TLM MODULE JUMPERS

STANDBY ONLY (TOGGLE MODE) W1 — 3 2 1 (✱)

ISL 1 DISABLE (ENABLE MODE) W2 — 3 2 1 (✱)

ISL 2 DISABLE (ENABLE MODE) W3 — 3 2 1 (✱)

MINUTE TIMEOUT SWITCH

SETTING	(☆) 9 MINUTES

S2 — STANDBY / AUTO / NORMAL

NOTE:
PIN 1 IS IDENTIFIED BY ASTERICK BELOW IT.
(☆) = MAY BE SET PER FIELD CONDITIONS.

11-1CWU HXP-3R2 MODULES REQUIRED

	STANDBY SYSTEM (UPPER BAY)	NORMAL SYSTEM (LOWER BAY)
	TLM MODULE (TRANSFER LOGIC)	(NOT INSTALLED) RMM MODULE (RECORDER MEMORY)
	TRM MODULE TRK.1 (TRANSCEIVER)	SIM MODULE(SERIAL INTERFACE) STANDBY
	RSI MODULE TRK.1 (ISLAND)	SIM MODULE(SERIAL INTERFACE) NORMAL
	RYD MODULE (RELAY DRIVE)	TRM MODULE TRK.1 (TRANSCEIVER)
	TRM MODULE TRK.2 (TRANSCEIVER)	RSI MODULE TRK.1 (ISLAND)
	RSI MODULE TRK.2 (ISLAND)(NOT USED)	RYD MODULE (RELAY DRIVE)
	CPU MODULE (CENTRAL PROCESSOR UNIT)	TRM MODULE TRK.2 (TRANSCEIVER)
	(NOT INSTALLED) AXD MODULE	RSI MODULE TRK.2 (ISLAND)(NOT USED)
		CPU MODULE (CENTRAL PROCESSOR UNIT)
		(NOT INSTALLED) AXD MODULE

FRONT VIEW

2TRKHXP3R2.C01
REV: 08-31-09

= NOTE

NEW WORK
CXV1128605 07-19-11
IL2010020
XRL/R.HARSHA/E.HORNE
xorail

CSX TRANSPORTATION
RAIL TRANSPORT GROUP ENGINEERING
COMMUNICATIONS AND SIGNALS

3330N RD. (TR-67) 353684A

CROSSING DETECTION CIRCUITRY (11-1 CWU)
ALVIN, IL M.P. 0ZA-108.11

DESIGNED	DIGITIZED	CHECKED	DATE
XRL/RHA	XRL/RHA	XRL	07-19-11

DESIGN DATE	REV. NO.	DRAWING	SHEET NO	FILE	SHEET
07-19-11	1	-----	-----	0ZA10811	C01

11-1CWU

HXP-3R2 APPLICATION DESIGN CARD

OPTION 90 (CABINET #)	CABINET #

PASSWORD(_ _*_ _)(SEE MANUAL 100052-001 AA0 1-27	TRACK 1	TRACK 2	DEFAULT
APPROACH LENGTH ADJUSTMENT	3388'	1557'	9,999 FT.
WARNING TIME ADJUSTMENT	32 SEC.	32 SEC.	99 SEC.
LUMPED IMPEDANCE ADJUSTMENT (LIA)	*	*	0
TRANSMITTER CHECK ADJUSTMENT (TC)	*	*	0
MOTION DETECT RESTART (MD RESTART)	0 ☆	0 ☆	99%
OPTION 1 TRACK ENABLE (TK-ENA)	UP	UP	UP (ALWAYS ENABLED)
OPTION 2 TRACK FREQUENCY (TK FO)	STRAP ◇	STRAP ◇	0 HZ
OPTION 3 CONSTANT WARNING/MOTION (CW/MD)	C	C	d (Motion)
OPTION 4 UNI/BIDIRECTIONAL (UNI-BI)	b	U	b (bi)
OPTION 5 NARROW BAND COMPENSATION (NBS-C)	⊗	⊗	9,999 FT.
OPTION 6 CWE WARNING TIME (CWEWT)	80 SEC.	80 SEC.	80 SEC.
OPTION 7 LOSS OF SHUNT TIME (LOS)	16 SEC.	16 SEC.	16 SEC.
OPTION 8 LOS W/JOINTS NEAR ISLAND (IJ-LOS)	5 SEC. **	5 SEC. **	5 SEC.
OPTION 9 BALLAST COMPENSATION (BC)	*	*	FREQUENCY DEPENDANT ◎
OPTION 10 PHASE COMPENSATION ADJUSTMENT (P-COMP)	~~***~~	~~***~~	0°

AX OPTIONS △		OPTION 11 AX DRIVE #1	OPTION 12 AX DRIVE #2	OPTION 13 AX DRIVE #3	DEFAULT
ITEM 1	TRACK ASSIGNMENT (TK-ASN)	1	1	1	1
ITEM 2	OFFSET DISTANCE TRACK 1 (OF-TK1)	0000'	0000'	0000'	0 FT.
ITEM 3	OFFSET DISTANCE TRACK 2 (OF-TK2)	N/A	N/A	N/A	N/A
ITEM 4	WARNING TIME (WT)	99 SEC.	99 SEC.	99 SEC.	99 SEC.
ITEM 5	MOTION DETECT RESTART (MD-RST)	99 %	99 %	99 %	99 %
ITEM 6	CONSTANT WARNING/MOTION (CW/MD)	d	d	d	d (Motion)
ITEM 7	CLEAR JOINTS LOS (CJ-LOS)	00 SEC.	00 SEC.	00 SEC.	0 SEC.
ITEM 8	POST JOINT DETECTION (PJ-DET)	15 SEC.	15 SEC.	15 SEC.	15 SEC.
ITEM 9	POST JOINT RX (PJ-RX)	15	15	15	15
ITEM 10	POSITIVE START	dn	dn	dn	dn

OPTION 17 MDR DRIVE OR AX RELAY DRIVE SELECTION (MDR-AX)	◎	N/A	dn (STATUS ONLY) ◎
OPTION 17 SUB-MENU	TRACK 1	TRACK 2	DEFAULT
ITEM 1 MDR-AX OFFSET DISTANCE TRK. 1(OF-TK1) & TRK. 2(OF-TK2)	0000'	0000'	0 FT.= CONFIGURED AS MDR
ITEM 2 MDR-AX CLEAR JOINT LOS TIME (CJ-LOS)	00 SEC.	00 SEC.	0 SEC.
ITEM 3 MDR-AX POST JOINT DETECTION TIME (PJ-DET)	15 SEC.	15 SEC.	15 SEC.
ITEM 4 POST JOINT RX (PJ-RX)	15	15	15 (0 = DISABLE)
OPTION 18 MOTION DETECTOR TIMER (MD-TMR)	10 MIN.	10 MIN.	10 MIN. (0 = DISABLE)
OPTION 19 MINIMUM WARNING TIME WITH ADVANCED PREEMPTION (MIN-WT)	00 SEC.	00 SEC.	00 SEC. (0 = DISABLE)
OPTION 20 FALSE SHUNT TIMER ADJUSTMENT (FS-TMR)			
ITEM 1 FALSE SHUNT RX (FS-RX)	0	0	0, 0 = DISABLE
ITEM 2 FALSE SHUNT TIMER ADJUSTMENT (FS-TM)	10	10	10
OPTION 21 POSITIVE START RX & TIMER ADJUSTMENT (POS-ST)			
ITEM 1 POSITIVE START RX (POS-RX)	0	0	0, 0 = DISABLE
ITEM 2 POSITIVE START TIMER (POS-TM)	10	10	10
OPTION 22 APPROACH RELEASE RX (AR-TM)			
ITEM 1 APPROACH RELEASE RX (AR-RX)	0	0	0, 0 = DISABLE
ITEM 2 APPROACH RELEASE TIMER (AR-TM)	10	10	10
OPTION 47 AUTO RX ADJUSTMENT (ATO-RX)	dn	dn	dn = DISABLE
OPTION 48 PREDICTIVE FILTER ENABLE/DISABLE (PF-ENA)	dn	dn	UP = ENABLE
OPTION 49 RESET LOCAL PARAMETERS TO DEFAULT SETTINGS (RESET)			PAGE 3-14 & 3-41
OPTION 50 RECORDER PRINTER CONTROL (PRNTR)	⊕		PAGE 1-47 & 3-41
OPTION 51 CLOCK ADJUSTMENT (CLOCK)	⊕		PAGE 3-32
OPTION 70 LOCAL SERIAL I/O PORT ADJUSTMENT (LSP)			
ITEM 1 BAUD RATE	38.4	⊕	PAGE 1-47 & 3-42
ITEM 2 DBITS (DATA BITS)	8	⊕	PAGE 1-47 & 3-42
ITEM 3 PA (PARITY)	NO(-=NO PARITY)	⊕	PAGE 1-47 & 3-42
OPTION 90 CABINET NUMBER DISPLAY (CAB)	*		PAGE 1-47 & 3-41
OPTION 91 HXP-3 OPERATING PROGRAM VERSION NUMBER (VERS)	*		VERSION 35.0
OPTION 99 RESET PASSWORD TIMER (TIMER)	⊕		PAGE 3-30

NOTE:

* = ENTRY TO BE DONE ON AS-IN-SERVICE.

☆ = NORMALLY SET AT "0" SEE MANUAL 100052-001 AA0 PG. 1-46 & 3-41.

◇ = THE WORD STRAP IS DISPLAYED WHEN FREQUENCY SELECT DIP SWITCHES USED TO SELECT A STANDARD FREQUENCY.

⊗ = ADJUSTMENT NECESSARY ONLY WHEN AX RELAY DRIVE MODULE USED.

** = ADJUSTMENT NECESSARY IF INSULATED JOINTS ARE LOCATED NEAR ISLAND CIRCUIT.

~~***~~ = ADJUSTMENT NECESSARY ONLY IF VERY POOR BALLAST CONDITIONS NEED TO BE COMPENSATED.

◎ = OPTION 17 SUB-MENU USED ONLY WHEN AX RELAY DRIVE OPERATION IS SELECTED. ENTERING AN OFFSET DISTANCE VALUE OTHER THAN ZERO ASSIGNS A MDR AS AN AX DRIVE.

△ 1. WHEN AXD MODULES ARE NOT INSTALLED, THEIR ASSOCIATED OPTIONS AND ADJUSTMENTS ARE NOT DISPLAYED.
2. PROGRAM UNUSED AX OPTION(S) SAME AS OPTION 11. IF AX OPTION 12 OR 13 IS USED IN FUTURE THEN REPROGRAM AS APPLICABLE.

◎ = FREQUENCY DEPENDANT, RANGE BETWEEN 50-250 TO BE SUPPLIED ON AS-IN-SERVICE.

⊕ = OPTIONS 50-99 ARE NON-VITAL AND NOT REQUIRED FOR INITIAL SETUP. SEE MANUAL 100052-001 AA0. FOR OPTIONS 49 TO 99 SEE PAGES AS LISTED IN DEFAULT COLUMN.

⊕ = SET CORRECT LOCAL TIME AND DATE. TIME OF DAY SHOULD BE SYNCRONIZED WITH TIME SHOWN BY EXTERNAL EVENT RECORDER.

2TRKHXP3R2.C02
REV. 10-31-07

NEW WORK
CXV1128605 IL2010020
07-19-11 XRL/R.HARSHA/E.HORNE
xorail

CSX TRANSPORTATION
RAIL TRANSPORT GROUP ENGINEERING
COMMUNICATIONS AND SIGNALS

3330N RD. (TR-67) 353684A

DETECTION DEVICE PROGRAM (11-1 CWU)
ALVIN, IL M.P. 0ZA-108.11

DESIGNED	DIGITIZED	CHECKED	DATE
XRL/RHA	XRL/RHA	XRL	07-19-11

DESIGN DATE	REV. NO.	DRAWING	SHEET NO	FILE	SHEET
07-19-11	1	-----	-----	0ZA10811	C02

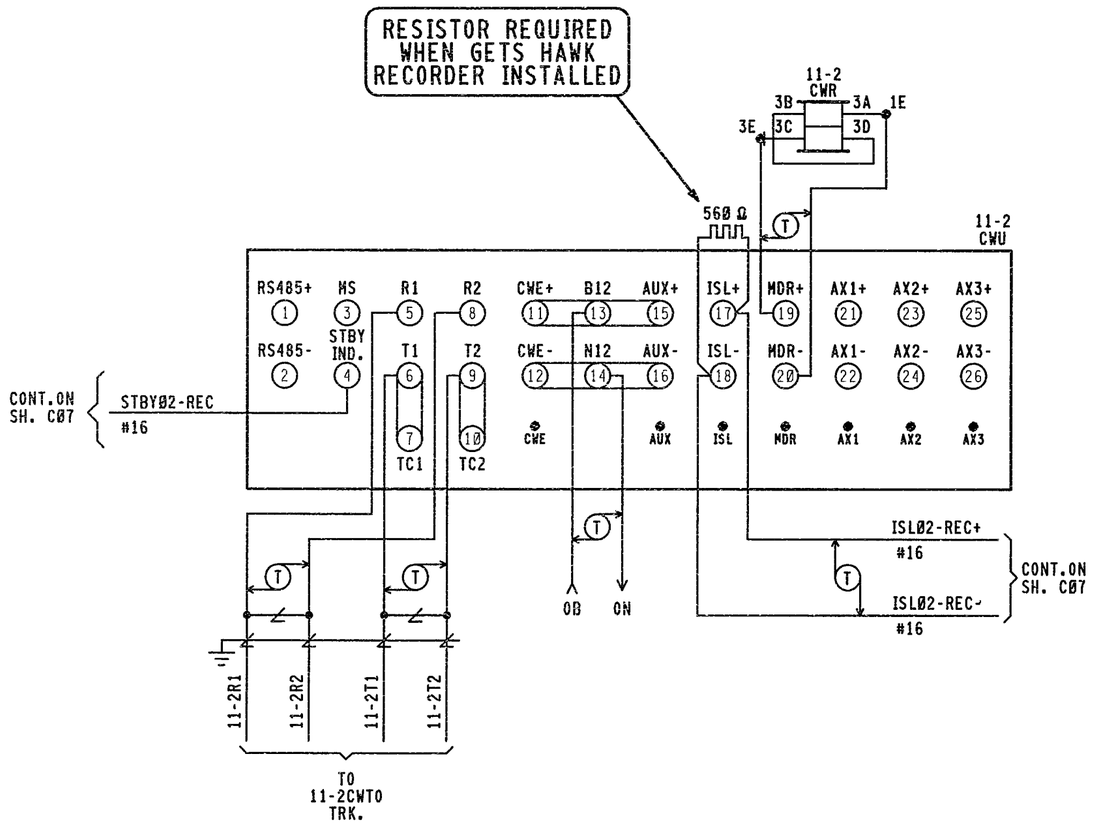

11-2CWU
HXP-3R MODULES REQUIRED

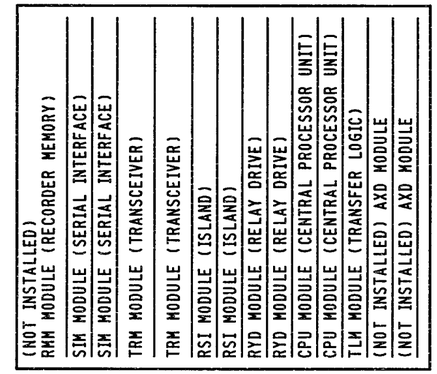

FRONT VIEW

RSI MODULE
226736-001 4.0KHZ

ISLAND FREQ.
4.0KHZ

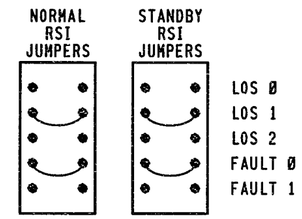

11-2
CWU

CABINET SWITCHES
THESE SWITCHES ARE LOCATED ON MOTHERBOARD

MASTER/SLAVE

MASTER SLAVE

S1

SYSTEM CONFIGURATION				
S6 & S7 DIP SWITCH POSITIONS				
SWITCH	1	2	3	4
SWITCH POSITION	ON	OFF	OFF	OFF
APPROACH.	NORMAL		(NOT USED)	

	FREQUENCY SELECT					
NORMAL	S2 & S3 DIP SWITCH POSITIONS 753 HZ					
	SWITCH	1	2	3	4	5
	SWITCH POSITION	ON	OFF	ON	OFF	ON
STANDBY	S4 & S5 DIP SWITCH POSITIONS 753 HZ					
	SWITCH	1	2	3	4	5
	SWITCH POSITION	ON	OFF	ON	OFF	ON

TLM MODULE
JUMPERS AND SWITCHES

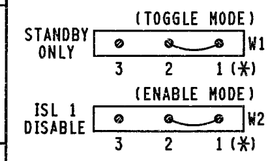

NOTE:
PIN 1 IS IDENTIFIED
BY ASTERICK BELOW IT.
(☆)= MAY BE SET PER
FIELD CONDITIONS.

MINUTE TIMEOUT SWITCH

SETTING	(☆) 9 MINUTES	S1

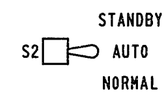

= NOTE

NEW WORK

CXV1128605 IL2010020
07-19-11 XRL/R.HARSHA/E.HORNE

xorail

CSX TRANSPORTATION
RAIL TRANSPORT GROUP ENGINEERING
COMMUNICATIONS AND SIGNALS

3330N RD. (TR-67) 353684A

CROSSING DETECTION CIRCUITRY (11-2 CWU)
ALVIN, IL M.P. 0ZA-108.11

1TRKHXP3R.C01
REV. 08-31-09

DESIGNED	DIGITIZED	CHECKED	DATE
XRL/RHA	XRL/RHA	XRL	07-19-11

DESIGN DATE	REV. NO.	DRAWING	SHEET NO	FILE	SHEET
07-19-11	1	-----	-----	0ZA10811	C03

11-2CWU

HXP-3R APPLICATION DESIGN CARD

OPTION 90 (CABINET #)	CABINET #

PASSWORD(_ _✳_ _)(SEE MANUAL 100052-001 AA0 1-27	TRACK 1	TRACK 2	DEFAULT
APPROACH LENGTH ADJUSTMENT	1540'	N/A	9,999 FT.
WARNING TIME ADJUSTMENT	32 SEC.	N/A	99 SEC.
LUMPED IMPEDANCE ADJUSTMENT (LIA)	✳	N/A	0
TRANSMITTER CHECK ADJUSTMENT (TC)	✳	N/A	0
MOTION DETECT RESTART (MD RESTART)	0 ☆	N/A	99%
OPTION 1 TRACK ENABLE (TK-ENA)	UP	N/A	UP (ALWAYS ENABLED)
OPTION 2 TRACK FREQUENCY (TK FO)	STRAP ◇	N/A	0 HZ
OPTION 3 CONSTANT WARNING/MOTION (CW/MD)	C	N/A	d (Motion)
OPTION 4 UNI/BIDIRECTIONAL (UNI-BI)	b	N/A	b (bi)
OPTION 5 NARROW BAND COMPENSATION (NBS-C)	⊗	N/A	9,999 FT.
OPTION 6 CWE WARNING TIME (CWEWT)	80 SEC.	N/A	80 SEC.
OPTION 7 LOSS OF SHUNT TIME (LOS)	16 SEC.	N/A	16 SEC.
OPTION 8 LOS W/JOINTS NEAR ISLAND (IJ-LOS)	5 SEC. ✳✳	N/A	5 SEC.
OPTION 9 BALLAST COMPENSATION (BC)	✳	N/A	FREQUENCY DEPENDANT ◎
OPTION 10 PHASE COMPENSATION ADJUSTMENT (P-COMP)	~~✳✳✳~~	N/A	0°

AX OPTIONS △		OPTION 11 AX DRIVE #1	OPTION 12 AX DRIVE #2	OPTION 13 AX DRIVE #3	DEFAULT
ITEM 1	TRACK ASSIGNMENT (TK-ASN)	N/A	N/A	N/A	1
ITEM 2	OFFSET DISTANCE TRACK 1 (OF-TK1)	0000'	0000'	0000'	0 FT.
ITEM 3	OFFSET DISTANCE TRACK 2 (OF-TK2)	N/A	N/A	N/A	N/A
ITEM 4	WARNING TIME (WT)	99 SEC.	99 SEC.	99 SEC.	99 SEC.
ITEM 5	MOTION DETECT RESTART (MD-RST)	99 %	99 %	99 %	99 %
ITEM 6	CONSTANT WARNING/MOTION (CW/MD)	d	d	d	d (Motion)
ITEM 7	CLEAR JOINTS LOS (CJ-LOS)	00 SEC.	00 SEC.	00 SEC.	0 SEC.
ITEM 8	POST JOINT DETECTION (PJ-DET)	15 SEC.	15 SEC.	15 SEC.	15 SEC.
ITEM 9	POST JOINT RX (PJ-RX)	15	15	15	15
ITEM 10	POSITIVE START	dn	dn	dn	dn

OPTION 17 MDR DRIVE OR AX RELAY DRIVE SELECTION (MDR-AX)	◎	N/A	dn (STATUS ONLY) ◎
OPTION 17 SUB-MENU	TRACK 1	TRACK 2	DEFAULT
ITEM 1 MDR-AX OFFSET DISTANCE TRK. 1(OF-TK1) & TRK. 2(OF-TK2)	0000'	N/A	0 FT.= CONFIGURED AS MDR
ITEM 2 MDR-AX CLEAR JOINT LOS TIME (CJ-LOS)	00 SEC.	N/A	0 SEC.
ITEM 3 MDR-AX POST JOINT DETECTION TIME (PJ-DET)	15 SEC.	N/A	15 SEC.
ITEM 4 POST JOINT RX (PJ-RX)	15	N/A	15 (0 = DISABLE)
OPTION 18 MOTION DETECTOR TIMER (MD-TMR)	10 MIN.	N/A	10 MIN. (0 = DISABLE)
OPTION 19 MINIMUM WARNING TIME WITH ADVANCED PREEMPTION (MIN-WT)	00 SEC.	N/A	00 SEC. (0 = DISABLE)
OPTION 20 FALSE SHUNT TIMER ADJUSTMENT (FS-TMR)			
ITEM 1 FALSE SHUNT RX (FS-RX)	0	N/A	0, 0 = DISABLE
ITEM 2 FALSE SHUNT TIMER ADJUSTMENT (FS-TM)	10	N/A	10
OPTION 21 POSITIVE START RX & TIMER ADJUSTMENT (POS-ST)			
ITEM 1 POSITIVE START RX (POS-RX)	0	N/A	0, 0 = DISABLE
ITEM 2 POSITIVE START TIMER (POS-TM)	10	N/A	10
OPTION 22 APPROACH RELEASE RX (AR-TM)			
ITEM 1 APPROACH RELEASE RX (AR-RX)	0	N/A	0, 0 = DISABLE
ITEM 2 APPROACH RELEASE TIMER (AR-TM)	10	N/A	10
OPTION 47 AUTO RX ADJUSTMENT (ATO-RX)	dn	N/A	dn = DISABLE
OPTION 48 PREDICTIVE FILTER ENABLE/DISABLE (PF-ENA)	dn	N/A	dn = DISABLE
OPTION 49 RESET LOCAL PARAMETERS TO DEFAULT SETTINGS (RESET)			PAGE 3-14 & 3-41
OPTION 50 RECORDER PRINTER CONTROL (PRNTR)	⌖		PAGE 1-47 & 3-41
OPTION 51 CLOCK ADJUSTMENT (CLOCK)	⌖		PAGE 3-32
OPTION 70 LOCAL SERIAL I/O PORT ADJUSTMENT (LSP)			
ITEM 1 BAUD RATE	38.4	⌖	PAGE 1-47 & 3-42
ITEM 2 DBITS (DATA BITS)	8	⌖	PAGE 1-47 & 3-42
ITEM 3 PA (PARITY)	NO(-=NO PARITY)	⌖	PAGE 1-47 & 3-42
OPTION 90 CABINET NUMBER DISPLAY (CAB)	✳		PAGE 1-47 & 3-41
OPTION 91 HXP-3 OPERATING PROGRAM VERSION NUMBER (VERS)	✳		VERSION 35.0
OPTION 99 RESET PASSWORD TIMER (TIMER)	⌖		PAGE 3-30

NOTE:

✳ = ENTRY TO BE DONE ON AS-IN-SERVICE.

☆ = NORMALLY SET AT "0" SEE MANUAL 100052-001 AA0 PG. 1-46 & 3-41.

◇ = THE WORD STRAP IS DISPLAYED WHEN FREQUENCY SELECT DIP SWITCHES USED TO SELECT A STANDARD FREQUENCY.

⊗ = ADJUSTMENT NECESSARY ONLY WHEN AX RELAY DRIVE MODULE USED.

✳✳ = ADJUSTMENT NECESSARY IF INSULATED JOINTS ARE LOCATED NEAR ISLAND CIRCUIT.

~~✳✳✳~~ = ADJUSTMENT NECESSARY ONLY IF VERY POOR BALLAST CONDITIONS NEED TO BE COMPENSATED.

◎ = OPTION 17 SUB-MENU USED ONLY WHEN AX RELAY DRIVE OPERATION IS SELECTED. ENTERING AN OFFSET DISTANCE VALUE OTHER THAN ZERO ASSIGNS A MDR AS AN AX DRIVE.

△ 1. WHEN AXD MODULES ARE NOT INSTALLED, THEIR ASSOCIATED OPTIONS AND ADJUSTMENTS ARE NOT DISPLAYED.
2. PROGRAM UNUSED AX OPTION(S) SAME AS OPTION 11. IF AX OPTION 12 OR 13 IS USED IN FUTURE THEN REPROGRAM AS APPLICABLE.

◎ = FREQUENCY DEPENDANT, RANGE BETWEEN 50-250 TO BE SUPPLIED ON AS-IN-SERVICE.

⌖ = OPTIONS 50-99 ARE NON-VITAL AND NOT REQUIRED FOR INITIAL SETUP. SEE MANUAL 100052-001 AA0. FOR OPTIONS 49 TO 99 SEE PAGES AS LISTED IN DEFAULT COLUMN.

⌖ = SET CORRECT LOCAL TIME AND DATE. TIME OF DAY SHOULD BE SYNCRONIZED WITH TIME SHOWN BY EXTERNAL EVENT RECORDER.

NEW WORK
CXV1128605 IL2010020
07-19-11 XRL/R.HARSHA/E.HORNE
xorail

1TRKHXP3R.C02
REV. 10-31-07

CSX TRANSPORTATION
RAIL TRANSPORT GROUP ENGINEERING
COMMUNICATIONS AND SIGNALS

3330N RD. (TR-67) 353684A

DETECTION DEVICE PROGRAM (11-2 CWU)
ALVIN, IL M.P. 0ZA-108.11

DESIGNED	DIGITIZED	CHECKED	DATE
XRL/RHA	XRL/RHA	XRL	07-19-11

DESIGN DATE	REV. NO.	DRAWING	SHEET NO	FILE	SHEET
07-19-11	1	-----	-----	0ZA10811	C04

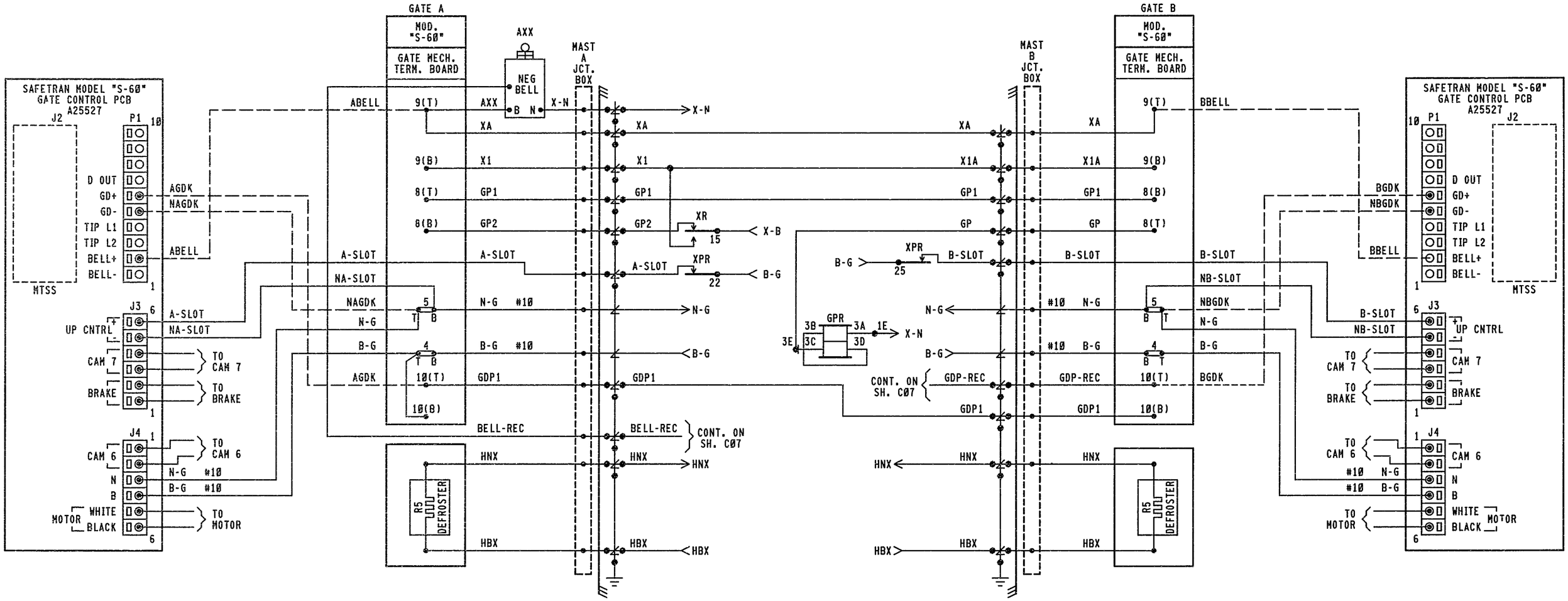

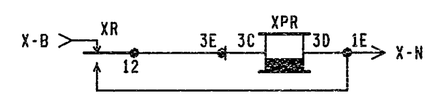

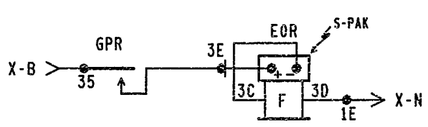

NOTES:

1. = TERMINAL IN JCT. BOX BASE
2. ALL WIRING #16 UNLESS NOTED OTHERWISE.

NEW WORK

CXV1128605 IL2010020

07-19-11 XRL/R.HARSHA/E.HORNE

xorail

CSX TRANSPORTATION

RAIL TRANSPORT GROUP ENGINEERING
COMMUNICATIONS AND SIGNALS

3330N RD. (TR-67) 353684A

CROSSING WARNING DEVICE GATE CIRCUITRY
ALVIN, IL M.P. 0ZA-108.11

PMD3RCPML.C03
REV. 09-30-10

DESIGNED	DIGITIZED	CHECKED	DATE
XRL/RHA	XRL/RHA	XRL	07-19-11

DESIGN DATE	REV. NO.	DRAWING	SHEET NO	FILE	SHEET
07-19-11	1	-----	-----	0ZA10811	C05

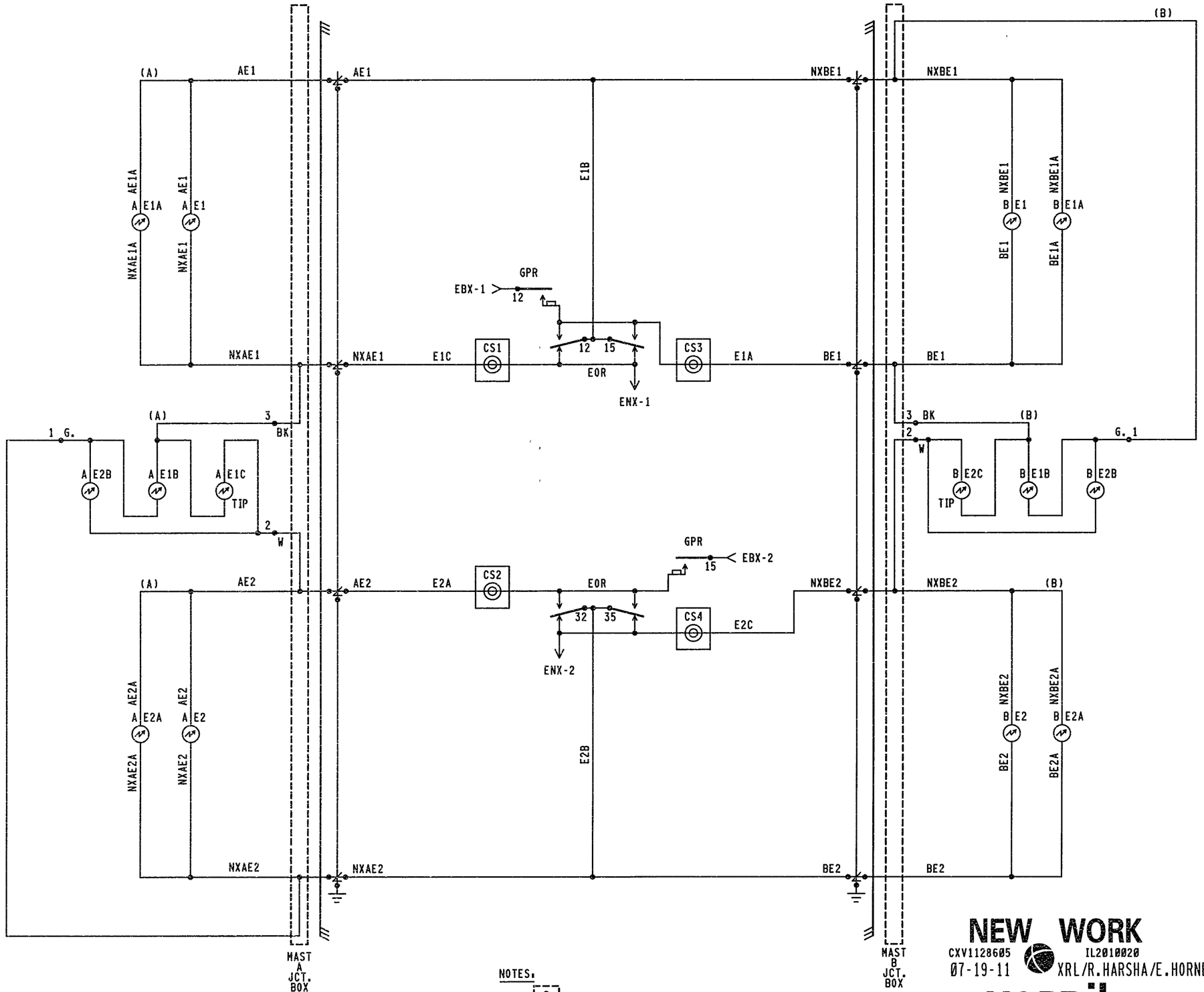

NOTES:

1. [ ] = TERMINAL IN JCT. BOX
2. WHEN 7 OR MORE LIGHTS ON A SINGLE STRUCTURE REFER TO SS-382 FOR REQUIRED ARRESTER RATING.

NEW WORK

CXV1128605 IL2010020

07-19-11 XRL/R.HARSHA/E.HORNE

xorail

CSX TRANSPORTATION

RAIL TRANSPORT GROUP ENGINEERING
COMMUNICATIONS AND SIGNALS

3330N RD. (TR-67) 353684A

CROSSING WARNING DEVICE LIGHT CIRCUITRY
ALVIN, IL M.P. 0ZA-108.11

PMD3RCPML.C04
REV. 09-30-10

DESIGNED	DIGITIZED	CHECKED	DATE
XRL/RHA	XRL/RHA	XRL	07-19-11

DESIGN DATE	REV. NO.	DRAWING	SHEET NO	FILE	SHEET
07-19-11	1	-----	-----	0ZA10811	C06

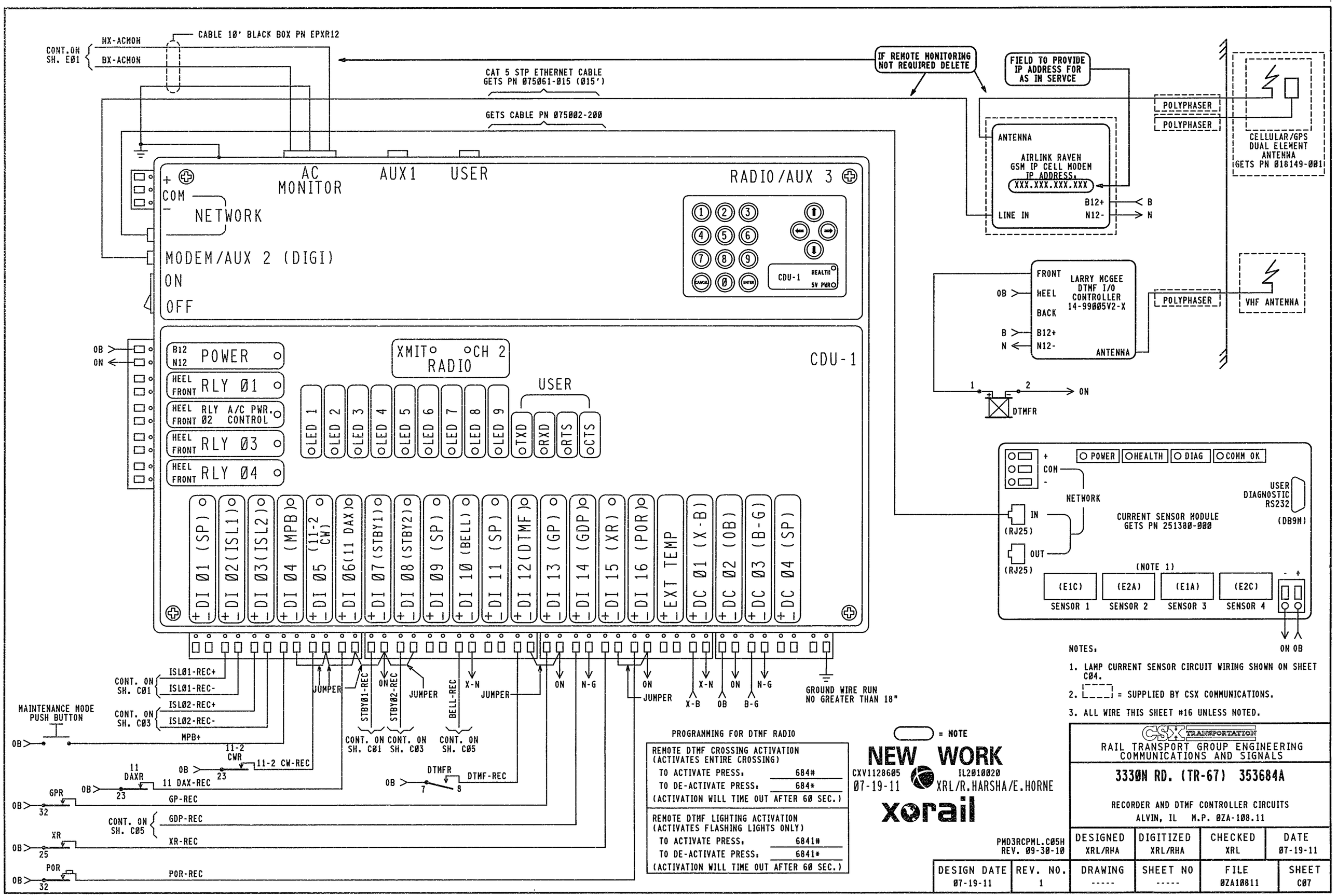

NOTES:

1. LAMP CURRENT SENSOR CIRCUIT WIRING SHOWN ON SHEET C04.
2. [ ] = SUPPLIED BY CSX COMMUNICATIONS.
3. ALL WIRE THIS SHEET #16 UNLESS NOTED.

PROGRAMMING FOR DTMF RADIO

REMOTE DTMF CROSSING ACTIVATION (ACTIVATES ENTIRE CROSSING)	
TO ACTIVATE PRESS:	684#
TO DE-ACTIVATE PRESS:	684*
(ACTIVATION WILL TIME OUT AFTER 60 SEC.)	
REMOTE DTMF LIGHTING ACTIVATION (ACTIVATES FLASHING LIGHTS ONLY)	
TO ACTIVATE PRESS:	6841#
TO DE-ACTIVATE PRESS:	6841*
(ACTIVATION WILL TIME OUT AFTER 60 SEC.)	

= NOTE

NEW WORK

CXV1128605 IL2010020

07-19-11 XRL/R.HARSHA/E.HORNE

xorail

PMD3RCPML.C05H
REV. 09-30-10

CSX TRANSPORTATION

RAIL TRANSPORT GROUP ENGINEERING
COMMUNICATIONS AND SIGNALS

3330N RD. (TR-67) 353684A

RECORDER AND DTMF CONTROLLER CIRCUITS
ALVIN, IL M.P. 0ZA-108.11

DESIGNED	DIGITIZED	CHECKED	DATE
XRL/RHA	XRL/RHA	XRL	07-19-11

DESIGN DATE	REV. NO.	DRAWING	SHEET NO	FILE	SHEET
07-19-11	1	-----	-----	0ZA10811	C07

	DEFAULTS AND/OR STYLE	FIELD RECORD
EVENT ANALYZER EXECUTIVE PROGRAM	VERSION 2.7, COMPILED ON NOV. 11, 2003	VERSION ____, COMPILED ON _____ (FIELD TO ENTER)
CSXT USER PROGRAM (IF LOADED)	VERSION 1.01, COMPILED ON 12-01-03 (MM-DD-YY)	VERSION , COMPILED ON _____ (FIELD TO ENTER)
SYSTEM SETTINGS		
DATE & TIME (ENABLE DAYLIGHT SAVINGS TIME = Y (YES)	MM-DD-YY 23:01:59	n/a
MILE POST	XYZ-789.01	0ZA-108.11
SITE NAME	MAIN ST (SR-17,US-1)	3330N RD.(TR-67)
DOT NUMBER	123456A	353684A

NOTE TO INSPECTOR, AT IN SERVICE OF EVENT ANALYZER OR UPDATE OF ITS INTERNAL EXECUTIVE PROGRAM OR ITS CSXT USER PROGRAM, THE VERSION NUMBER AND COMPILE DATES OF EACH PROGRAM MUST BE INSERTED IN THE BLANK FIELDS.

EVENT ANALYZER ETHERNET PORT SETUP	
	IP ADDRESS
ETHERNET DIAGNOSTIC PORT (TOP)	192.168.13.2
ETHERNET REMOTE PORT (BOTTOM)	192.168.13.1

BATTERY INPUTS	DC 01	DC 02	DC 03	DC 04
CHANNEL	1	2	3	4
BATTERY CHANNEL NAMES	X-B BULB BATTERY	OB ELECTRONIC BATTERY	B-G GATE BATTERY	SPARE
BATTERY CHANNEL I.D.	X-B	OB	B-G	SP
SAMPLE PERIOD	500 ms	500 ms	500 ms	10,000 ms
RESOLUTION	00.2 V	00.2 V	01.0 V	02.0 V

MODULE-DIGITAL 4 QUAD CURRENT SENSOR SERIAL NUMBER: [_____] (BLANK UNTIL AIS RECEIVED)				
RESOLUTION (AMPS RMS) : [00.2] ARMS				
AUTOMATICALLY ALLOCATED DIGITAL INPUT	DI 17	DI 18	D1 19	D1 20
DIGITAL 4 QUAD CURRENT SENSOR	1	2	3	4
NAME	E1C	E2A	E1A	E2C
ID	E1C	E2A	E1A	E2C
LIT BULB COUNT ON EACH CIRCUIT	4	4	4	4
CURRENT READING IN AMPS AT APPROXIMATE 10.0 VOLTS BULB VOLTAGE	2.6	2.6	2.6	2.6

DIGITAL INPUTS	DI 01	DI 02	DI 03	DI 04	DI 05
CHANNEL	1	2	3	4	5
NAME		ISLAND TRACK 1	ISLAND TRACK 2	MAINTENANCE PB	11-2 CW
ID	SP	ISL1	ISL2	MPB	11-2 CW
ON NAME		ISL1 UP	ISL2 UP	MAINTENANCE PB HI	11-2 CWR UP
OFF NAME		ISL1 DN	ISL2 DN	MAINTENANCE PB LOW	11-2 CWR DN
ON DEBOUNCE TIME	1000 ms	100 ms	100 ms	100 ms	100 ms
OFF DEBOUNCE TIME	1000 ms	100 ms	100 ms	100 ms	100 ms
TOGGLE PERIOD	500 ms	500 ms	500 ms	500 ms	500 ms

CHANNEL	1	2	3	4
NAME	RELAY OUTPUT 01	RELAY OUTPUT 02	RELAY OUTPUT 03	RELAY OUTPUT 04
I.D.	RLY01	RLY02	RLY03	RLY04
ON NAME	ON	ON	ON	ON
OFF NAME	OFF	OFF	OFF	OFF
PULSE DURATION	1000 ms	1000 ms	1000 ms	1000 ms

DIGITAL INPUTS	DI 06	DI 07	DI 08	DI 09	DI 10
CHANNEL	6	7	8	9	10
NAME	11 DAX	STANDBY 1	STANDBY 2		BELL
ID	11 DAX	STBY 1	STBY 2	SP	BELL
ON NAME	11 DAXR UP	STANDBY UNIT	STANDBY UNIT		BELL RINGING
OFF NAME	11 DAXR DN	PRIMARY UNIT	PRIMARY UNIT		BELL NOT RINGING
ON DEBOUNCE TIME	100 ms	100 ms	100 ms	1000 ms	100 ms
OFF DEBOUNCE TIME	100 ms	100 ms	100 ms	1000 ms	100 ms
TOGGLE PERIOD	500 ms	500 ms	500 ms	500 ms	500 ms

PORT	USER	AUX 1	MODEM/AUX 2
BAUD RATE	38400	9600	9600
PARITY	N	N	N
DATA BITS	8	8	8
STOP BITS	1	1	1
FLOW CONTROL	NONE	NONE	NONE

DIGITAL INPUTS	DI 11	DI 12	DI 13	DI 14	DI 15	DI 16
CHANNEL	11	12	13	14	15	16
NAME		DTMF/TEST	GATE VERTICAL	GATE HORIZONTAL	XR	AC POWER OFF
ID	SP	DTMF	GP	GDP	XR	POR
ON NAME		DEACTIVATED	GATE VERTICAL	GATE HORIZONTAL	XR UP	AC POWER ON
OFF NAME		ACTIVATED	GATE NOT VERTICAL	GATE NOT HORIZONTAL	XR DN	AC POWER OFF
ON DEBOUNCE TIME	1000 ms	100 ms	100 ms	100 ms	100 ms	100 ms
OFF DEBOUNCE TIME	1000 ms	100 ms	100 ms	100 ms	100 ms	100 ms
TOGGLE PERIOD	500 ms	500 ms	500 ms	500 ms	500 ms	500 ms

= NOTE

NEW WORK

CXV1128605 IL2010020

07-19-11 XRL/R.HARSHA/E.HORNE

xorail

CSX TRANSPORTATION

RAIL TRANSPORT GROUP ENGINEERING
COMMUNICATIONS AND SIGNALS

3330N RD. (TR-67) 353684A

RECORDER PROGRAM
ALVIN, IL M.P. 0ZA-108.11

PMD3RCPML.C06
REV. 01-08-10

DESIGNED	DIGITIZED	CHECKED	DATE
XRL/RHA	XRL/RHA	XRL	07-19-11

DESIGN DATE	REV. NO.	DRAWING	SHEET NO	FILE	SHEET
07-19-11	1	-----	-----	0ZA10811	C08

TOP ROW

		21 DAXR 12 ____ B8 15 ____ C30 22 ____ 23 F 25 F 32 ____ 35 ____				

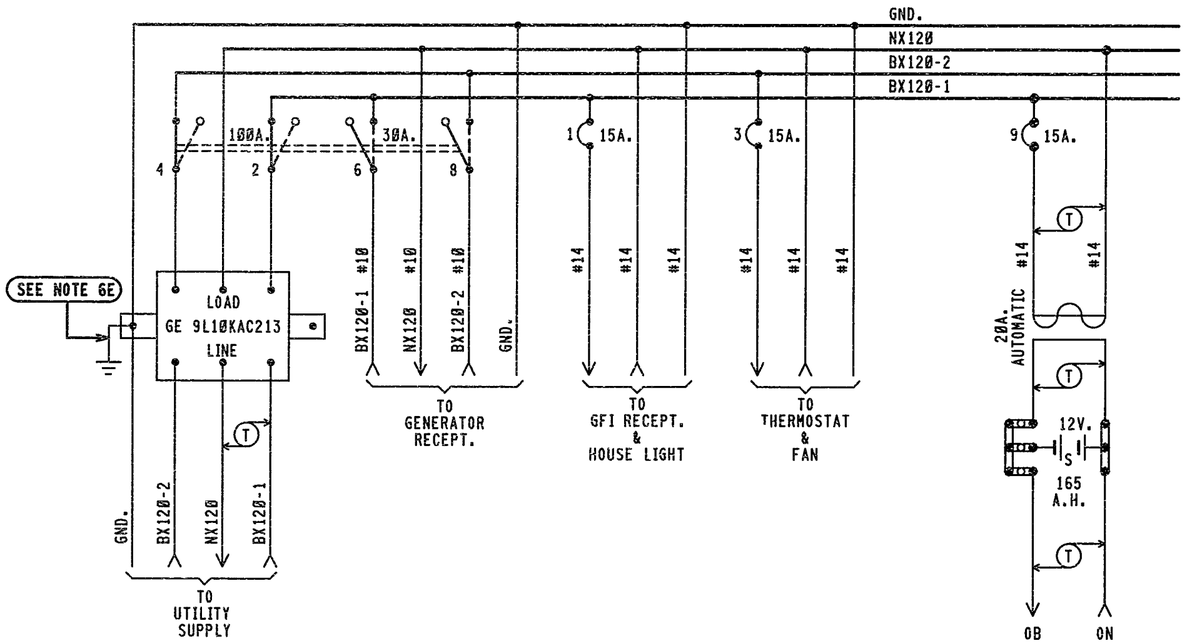

BX120-1	BX120-2
8.0 AMPS	2.0 AMPS

MAXIMUM LOAD
CALCULATED PER SS360

NOTES.

1 - REFERENCES ARE PER SCMS-13.
2 - ARRESTERS ARE PER SS382.
3 - SHELF RELAY PLACEMENT ON CONSIST CHART HAS NO SIGNIFICANCE.
4 - PLUG-IN RELAYS ARE VIEWED FROM THE FRONT OF RACK.
5 - BATTERY A.H. CAPACITY SHOWN IS THE MINIMUM REQUIREMENT.
6 - WIRING
  A - FEED TO ALL BUSSES, LIGHT CIRCUITS,MOTOR CIRCUITS TO BE #10 FLEX.
  B - 120-VOLT FEED FROM ENTRANCE TO POWER BUSS TO BE #10 FLEX.
  C - ALL TRACK WIRES TO BE #10 FLEX.
  D - ALL OTHERS TO BE #16 FLEX UNLESS NOTED.
  E - GROUND WIRE NOT NECESSARY WHEN GE ARRESTER IS MOUNTED ON GROUND PLANE OR METAL ENCLOSURE AFFIXED DIRECTLY TO BUNGALOW METALLIC STRUCTURAL MEMBER.
7 - CIRCUIT INTERRUPTERS 2 & 4 ARE MECHANICALLY INTERLOCKED WITH CIRCUIT INTERRUPTERS 6 & 8.

= NOTE

NEW WORK
CXV1128605 IL2010020
07-19-11 XRL/R.HARSHA/E.HORNE
xorail

REMOTE4X4.E01
REV. 09-15-04

4'X 4' RELAY HOUSE W/FARADAY SHIELD

REVISIONS	CSX TRANSPORTATION RAIL TRANSPORT GROUP ENGINEERING COMMUNICATIONS AND SIGNALS			
	S.E. ROSSVILLE & 3330N RD. (TR-67) 353684A POWER DISTRIBUTION ALVIN, IL M.P. 0ZA-108.21			
	DESIGNED XRL/RHA	DIGITIZED XRL/RHA	CHECKED XRL	DATE 07-19-11

DRAWING	SHEET NO	NEXT SH	NEXT FILE	NEXT SH	FILE	SHEET
-----	-----	-----	0ZA10821	C01	0ZA10821	E04

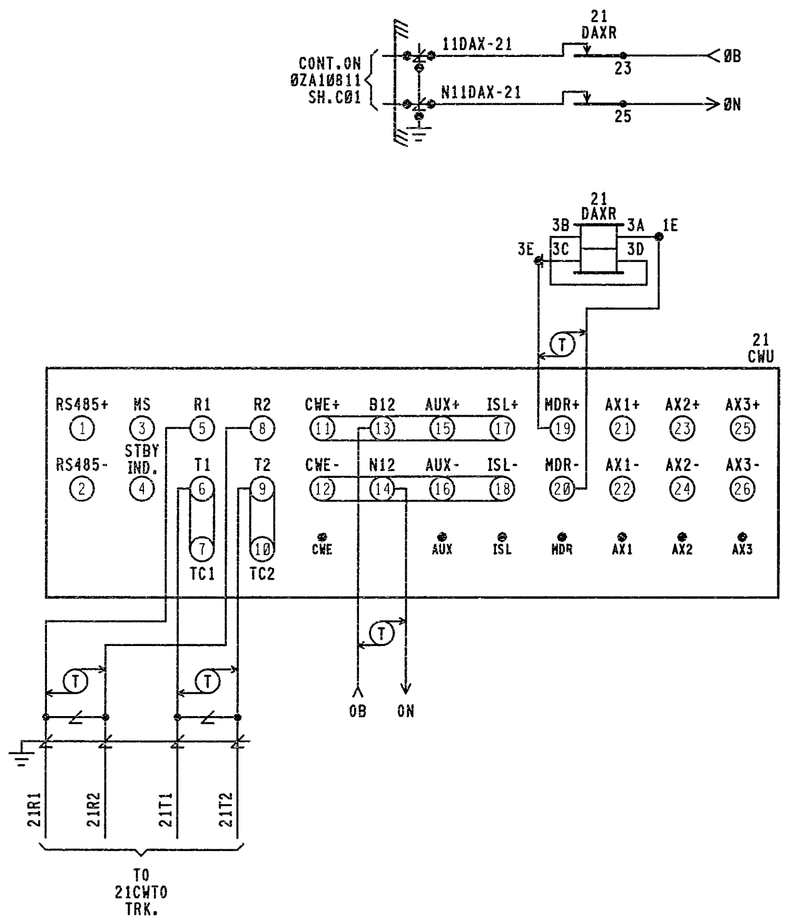

21CWU
HXP-3R MODULES REQUIRED

(NOT INSTALLED)	RMM MODULE (RECORDER MEMORY)
SIM MODULE (SERIAL INTERFACE)	
SIM MODULE (SERIAL INTERFACE)	
TRM MODULE (TRANSCEIVER)	
TRM MODULE (TRANSCEIVER)	
(NOT INSTALLED)	RSI MODULE (ISLAND)
(NOT INSTALLED)	RSI MODULE (ISLAND)
RYD MODULE (RELAY DRIVE)	
RYD MODULE (RELAY DRIVE)	
CPU MODULE (CENTRAL PROCESSOR UNIT)	
CPU MODULE (CENTRAL PROCESSOR UNIT)	
TLM MODULE (TRANSFER LOGIC)	
(NOT INSTALLED)	AXD MODULE
(NOT INSTALLED)	AXD MODULE

FRONT VIEW

CABINET SWITCHES

THESE SWITCHES ARE LOCATED ON MOTHERBOARD

MASTER/SLAVE

MASTER — SLAVE

S1

SYSTEM CONFIGURATION				
S6 & S7 DIP SWITCH POSITIONS				
SWITCH	1	2	3	4
SWITCH POSITION	ON	OFF	OFF	OFF
APPROACH:	NORMAL		(NOT USED)	

	FREQUENCY SELECT					
NORMAL	S2 & S3 DIP SWITCH POSITIONS 210 HZ					
	SWITCH	1	2	3	4	5
	SWITCH POSITION	OFF	ON	ON	OFF	OFF
STANDBY	S4 & S5 DIP SWITCH POSITIONS 210 HZ					
	SWITCH	1	2	3	4	5
	SWITCH POSITION	OFF	ON	ON	OFF	OFF

TLM MODULE JUMPERS

(TOGGLE MODE)
STANDBY ONLY — W1 — 3 2 1 (✱)

(DISABLE MODE)
ISL 1 DISABLE — W2 — 3 2 1 (✱)

(DISABLE MODE)
ISL 2 DISABLE — W3 — 3 2 1 (✱)

NOTE:
PIN 1 IS IDENTIFIED BY ASTERICK BELOW IT.
(☆) = MAY BE SET PER FIELD CONDITIONS.

MINUTE TIMEOUT SWITCH
SETTING (☆) 9 MINUTES

STANDBY
S2 — AUTO
NORMAL

REMOTE4X4.EØ1
REV. Ø9-15-Ø4

4'X 4' REMOTE RELAY HOUSE W/FARADAY SHIELD

NEW WORK
CXV1128605 IL2010020
Ø7-19-11 XRL/R.HARSHA/E.HORNE
xorail

REVISIONS			CSX TRANSPORTATION RAIL TRANSPORT GROUP ENGINEERING COMMUNICATIONS AND SIGNALS			
			S.E. ROSSVILLE & 3330N RD. (TR-67) 353684A CROSSING DETECTION CIRCUITRY ALVIN, IL M.P. ØZA-1Ø8.21			
			DESIGNED XRL/RHA	DIGITIZED XRL/RHA	CHECKED XRL	DATE Ø7-19-11
DRAWING -----	SHEET NO -----	NEXT SH -----	NEXT FILE ØZA1Ø821	NEXT SH C11	FILE ØZA1Ø821	SHEET C1Ø

21CWU

HXP-3R APPLICATION DESIGN CARD

OPTION 90 (CABINET #)	CABINET #

PASSWORD(_ _✳_ _)(SEE MANUAL 100052-001 AA0 1-27	TRACK 1	TRACK 2	DEFAULT
APPROACH LENGTH ADJUSTMENT	2826'	N/A	9,999 FT.
WARNING TIME ADJUSTMENT	32 SEC.	N/A	99 SEC.
LUMPED IMPEDANCE ADJUSTMENT (LIA)	✳	N/A	0
TRANSMITTER CHECK ADJUSTMENT (TC)	✳	N/A	0
MOTION DETECT RESTART (MD RESTART)	0 ☆	N/A	99%
OPTION 1 TRACK ENABLE (TK-ENA)	UP	N/A	UP (ALWAYS ENABLED)
OPTION 2 TRACK FREQUENCY (TK FO)	STRAP ◇	N/A	0 HZ
OPTION 3 CONSTANT WARNING/MOTION (CW/MD)	C	N/A	d (Motion)
OPTION 4 UNI/BIDIRECTIONAL (UNI-BI)	B	N/A	b (bi)
OPTION 5 NARROW BAND COMPENSATION (NBS-C)	⊗	N/A	9,999 FT.
OPTION 6 CWE WARNING TIME (CWEWT)	80 SEC.	N/A	80 SEC.
OPTION 7 LOSS OF SHUNT TIME (LOS)	16 SEC.	N/A	16 SEC.
OPTION 8 LOS W/JOINTS NEAR ISLAND (IJ-LOS)	5 SEC. ✳✳	N/A	5 SEC.
OPTION 9 BALLAST COMPENSATION (BC)	✳	N/A	FREQUENCY DEPENDANT ◎
OPTION 10 PHASE COMPENSATION ADJUSTMENT (P-COMP)	~~✳✳✳~~	N/A	0°

	AX OPTIONS △	OPTION 11 AX DRIVE #1	OPTION 12 AX DRIVE #2	OPTION 13 AX DRIVE #3	DEFAULT
ITEM 1	TRACK ASSIGNMENT (TK-ASN)	N/A	N/A	N/A	1
ITEM 2	OFFSET DISTANCE TRACK 1 (OF-TK1)	0000'	0000'	0000'	0 FT.
ITEM 3	OFFSET DISTANCE TRACK 2 (OF-TK2)	N/A	N/A	N/A	N/A
ITEM 4	WARNING TIME (WT)	99 SEC.	99 SEC.	99 SEC.	99 SEC.
ITEM 5	MOTION DETECT RESTART (MD-RST)	99 %	99 %	99 %	99 %
ITEM 6	CONSTANT WARNING/MOTION (CW/MD)	d	d	d	d (Motion)
ITEM 7	CLEAR JOINTS LOS (CJ-LOS)	00 SEC.	00 SEC.	00 SEC.	0 SEC.
ITEM 8	POST JOINT DETECTION (PJ-DET)	15 SEC.	15 SEC.	15 SEC.	15 SEC.
ITEM 9	POST JOINT RX (PJ-RX)	15	15	15	15
ITEM 10	POSITIVE START	dn	dn	dn	dn

OPTION 17 MDR DRIVE OR AX RELAY DRIVE SELECTION (MDR-AX)			◎	N/A	dn (STATUS ONLY) ◎
	OPTION 17 SUB-MENU		TRACK 1	TRACK 2	DEFAULT
ITEM 1	MDR-AX OFFSET DISTANCE TRK. 1(OF-TK1) & TRK. 2(OF-TK2)		562'	N/A	0 FT.= CONFIGURED AS MDR
ITEM 2	MDR-AX CLEAR JOINT LOS TIME (CJ-LOS)		00 SEC.	N/A	0 SEC.
ITEM 3	MDR-AX POST JOINT DETECTION TIME (PJ-DET)		15 SEC.	N/A	15 SEC.
ITEM 4	POST JOINT RX (PJ-RX)		15	N/A	15 (0 = DISABLE)
OPTION 18 MOTION DETECTOR TIMER (MD-TMR)			10 MIN.	N/A	10 MIN. (0 = DISABLE)
OPTION 19 MINIMUM WARNING TIME WITH ADVANCED PREEMPTION (MIN-WT)			00 SEC.	N/A	00 SEC. (0 = DISABLE)
	OPTION 20 FALSE SHUNT TIMER ADJUSTMENT (FS-TMR)				
ITEM 1	FALSE SHUNT RX (FS-RX)		0	N/A	0, 0 = DISABLE
ITEM 2	FALSE SHUNT TIMER ADJUSTMENT (FS-TM)		10	N/A	10
	OPTION 21 POSITIVE START RX & TIMER ADJUSTMENT (POS-ST)				
ITEM 1	POSITIVE START RX (POS-RX)		0	N/A	0, 0 = DISABLE
ITEM 2	POSITIVE START TIMER (POS-TM)		10	N/A	10
	OPTION 22 APPROACH RELEASE RX (AR-TM)				
ITEM 1	APPROACH RELEASE RX (AR-RX)		0	N/A	0, 0 = DISABLE
ITEM 2	APPROACH RELEASE TIMER (AR-TM)		10	N/A	10
OPTION 47 AUTO RX ADJUSTMENT (ATO-RX)			dn	N/A	dn = DISABLE
OPTION 48 PREDICTIVE FILTER ENABLE/DISABLE (PF-ENA)			dn	N/A	dn = DISABLE
OPTION 49 RESET LOCAL PARAMETERS TO DEFAULT SETTINGS (RESET)					PAGE 3-14 & 3-41
OPTION 50 RECORDER PRINTER CONTROL (PRNTR)			⌖		PAGE 1-47 & 3-41
OPTION 51 CLOCK ADJUSTMENT (CLOCK)			⌖		PAGE 3-32
	OPTION 70 LOCAL SERIAL I/O PORT ADJUSTMENT (LSP)				
ITEM 1	BAUD RATE		38.4	⌖	PAGE 1-47 & 3-42
ITEM 2	DBITS (DATA BITS)		8	⌖	PAGE 1-47 & 3-42
ITEM 3	PA (PARITY)		NO(-=NO PARITY)	⌖	PAGE 1-47 & 3-42
OPTION 90 CABINET NUMBER DISPLAY (CAB)			✳		PAGE 1-47 & 3-41
OPTION 91 HXP-3 OPERATING PROGRAM VERSION NUMBER (VERS)			✳		VERSION 35.0
OPTION 99 RESET PASSWORD TIMER (TIMER)			⌖		PAGE 3-30

NOTE:

✳ = ENTRY TO BE DONE ON AS-IN-SERVICE.

☆ = NORMALLY SET AT "0" SEE MANUAL 100052-001 AA0 PG. 1-46 & 3-41.

◇ = THE WORD STRAP IS DISPLAYED WHEN FREQUENCY SELECT DIP SWITCHES USED TO SELECT A STANDARD FREQUENCY.

⊗ = ADJUSTMENT NECESSARY ONLY WHEN AX RELAY DRIVE MODULE USED.

✳✳ = ADJUSTMENT NECESSARY IF INSULATED JOINTS ARE LOCATED NEAR ISLAND CIRCUIT.

~~✳✳✳~~ = ADJUSTMENT NECESSARY ONLY IF VERY POOR BALLAST CONDITIONS NEED TO BE COMPENSATED.

◎ = OPTION 17 SUB-MENU USED ONLY WHEN AX RELAY DRIVE OPERATION IS SELECTED. ENTERING AN OFFSET DISTANCE VALUE OTHER THAN ZERO ASSIGNS A MDR AS AN AX DRIVE.

△ 1. WHEN AXD MODULES ARE NOT INSTALLED, THEIR ASSOCIATED OPTIONS AND ADJUSTMENTS ARE NOT DISPLAYED.
2. PROGRAM UNUSED AX OPTION(S) SAME AS OPTION 11. IF AX OPTION 12 OR 13 IS USED IN FUTURE THEN REPROGRAM AS APPLICABLE.

◎ = FREQUENCY DEPENDANT, RANGE BETWEEN 50-250 TO BE SUPPLIED ON AS-IN-SERVICE.

⌖ = OPTIONS 50-99 ARE NON-VITAL AND NOT REQUIRED FOR INITIAL SETUP. SEE MANUAL 100052-001 AA0. FOR OPTIONS 49 TO 99 SEE PAGES AS LISTED IN DEFAULT COLUMN.

⌖ = SET CORRECT LOCAL TIME AND DATE. TIME OF DAY SHOULD BE SYNCRONIZED WITH TIME SHOWN BY EXTERNAL EVENT RECORDER.

REMOTE4X4.E01
REV. 09-15-04

4'X 4' REMOTE RELAY HOUSE W/FARADAY SHIELD

NEW WORK
CXV1128605 IL2010020
07-19-11 XRL/R.HARSHA/E.HORNE
xorail

REVISIONS			CSX TRANSPORTATION RAIL TRANSPORT GROUP ENGINEERING COMMUNICATIONS AND SIGNALS			
			S.E. ROSSVILLE & 3330N RD. (TR-67) 353684A DETECTION DEVICE PROGRAM ALVIN, IL M.P. 0ZA-108.21			
			DESIGNED XRL/RHA	DIGITIZED XRL/RHA	CHECKED XRL	DATE 07-19-11
DRAWING -----	SHEET NO -----	NEXT SH -----	NEXT FILE -----	NEXT SH -----	FILE 0ZA10821	SHEET C11