$WATERMARK

lei-041.90-09.dgn
15-JUL-2011

REVISIONS				
NO.	DATE	BY	DESCRIPTION	APP. BY
1				
2				
3				
4				
5				

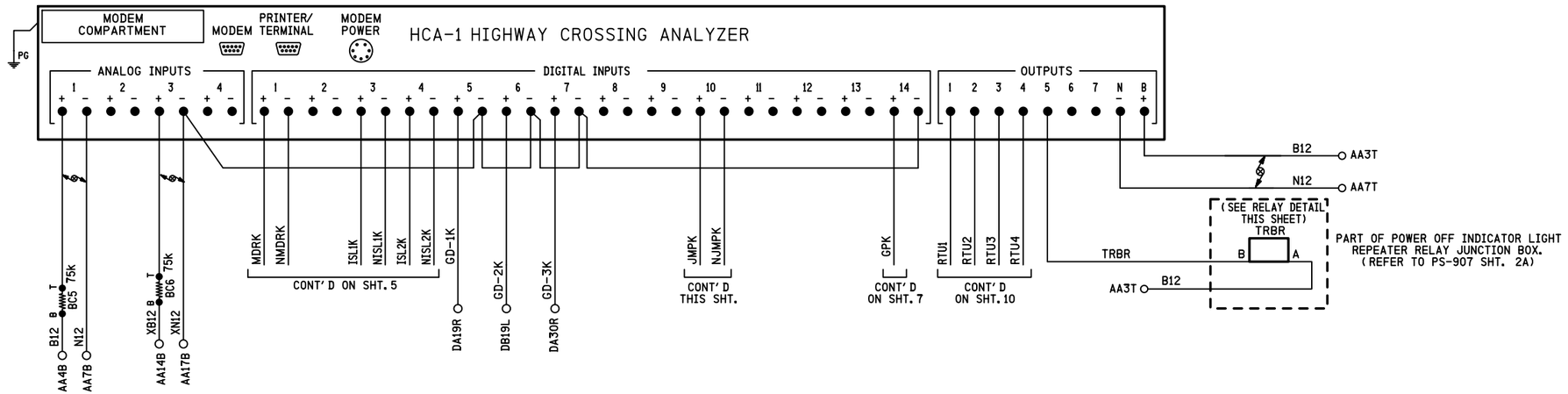

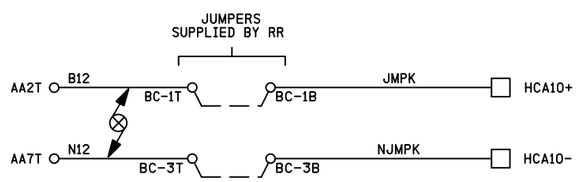

NOTES:

1. ALL WIRING ON THIS SHEET TO BE #16 UNLESS OTHERWISE NOTED.
2. DENOTES TWISTED PAIR.

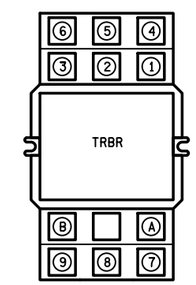

LOCATED OVER ENTRY DOOR

RELAY DETAIL

RELAY - POTTER & BRUMFIELD
MODEL KUMP-14D18-12 SOCKET MOUNTABLE
12 VDC W/ 3 FORM C CONTACTS.

SOCKET - SCREW TERMINAL
MODEL 27E121.

RELAY WIRING DIAGRAM (REAR VIEW)

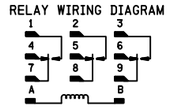

NOTE:
SOCKET NUMBERING CORRESPONDS DIRECTLY WITH RELAY NUMBERING.
(COIL SHOWN ENERGIZED)

PROPOSED
DES. No. _____
RED-IN YELLOW-OUT
AS INSTALLED
DATE _____
BY _____

6' X 6' BUNGALOW

PROPOSED D	M	Y	REVISIONS	D	C	COMPLETED D	M	Y	C

REGION SOUTHERN
SUB. LEITHTON 332

SIGNALS AND COMMUNICATIONS HOMEWOOD
05 MAY 2010
DES. MKN
CH. DTB

HIGHWAY CROSSING ANALYZER
HCA-1
OLD SHOE FACTORY ROAD
SUTTON, IL

LEI-041.90-09

SAFETRAN SYSTEM CORP.
LOUISVILLE DIVISION, LOUISVILLE, KY

SAFETRAN SYSTEMS CORPORATION			
DES.: MKN	DATE: 05-05-10	JOB NO.: JXXE01495	
CKD.: DTB	ISSUE DATE: N/A	EST. NO.:	
DRN.: DL	PLAN NO.: N/A	SHEET 9 OF 15	
P TIME: 16:57	P DATE: 15-JUL-2011	CAD ID.: LEI-041.90-09	

$WATERMARK

lei-041.90-10.dgn
15-JUL-2011

REVISIONS				
NO.	DATE	BY	DESCRIPTION	APP. BY
1				
2				
3				
4				
5				

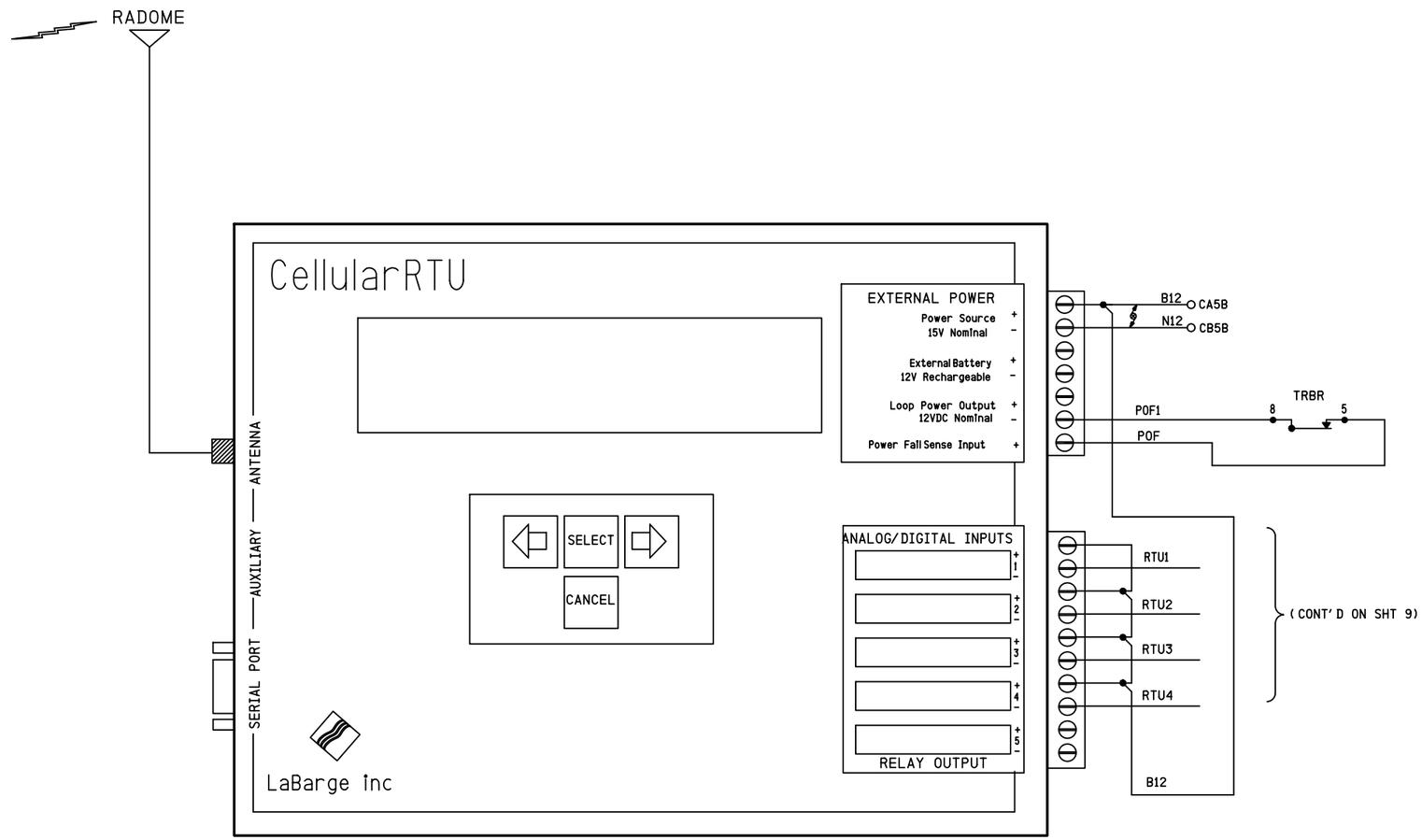

NOTES:

1. ALL WIRING ON THIS SHEET TO BE #16 UNLESS OTHERWISE NOTED.
2. DENOTES TWISTED PAIR.

* RTU TO BE SUPPLIED AND INSTALLED BY RAILROAD

PROPOSED
DES. No. _____
RED-IN YELLOW-OUT
AS INSTALLED
DATE _____
BY _____

6' X 6' BUNGALOW

PROPOSED			REVISIONS	D	C	COMPLETED			C
D	M	Y				D	M	Y	

REGION SOUTHERN
SUB. LEITHTON 332

SIGNALS AND COMMUNICATIONS HOMEWOOD
05 MAY 2010
DES. MKN
CH. DTB

RTU CIRCUITS

OLD SHOE FACTORY ROAD
SUTTON, IL

LEI-041.90-10

SAFETRAN SYSTEM CORP.
LOUISVILLE DIVISION, LOUISVILLE, KY

SAFETRAN SYSTEMS CORPORATION		
DES.: MKN	DATE: 05-05-10	JOB NO.: JXXEG1495
CKD.: DTB	ISSUE DATE: N/A	EST. NO.:
DRN.: DL	PLAN NO.: N/A	SHEET 10 OF 15
P TIME: 16:58	P DATE: 15-JUL-2011	CAD ID.: LEI-041.90-10

$WATERMARK

lei-041. 90-11. dgn
15-JUL-2011

REVISIONS			
NO.	DATE	BY	DESCRIPTION
1			
2			
3			
4			
5			

APP. BY

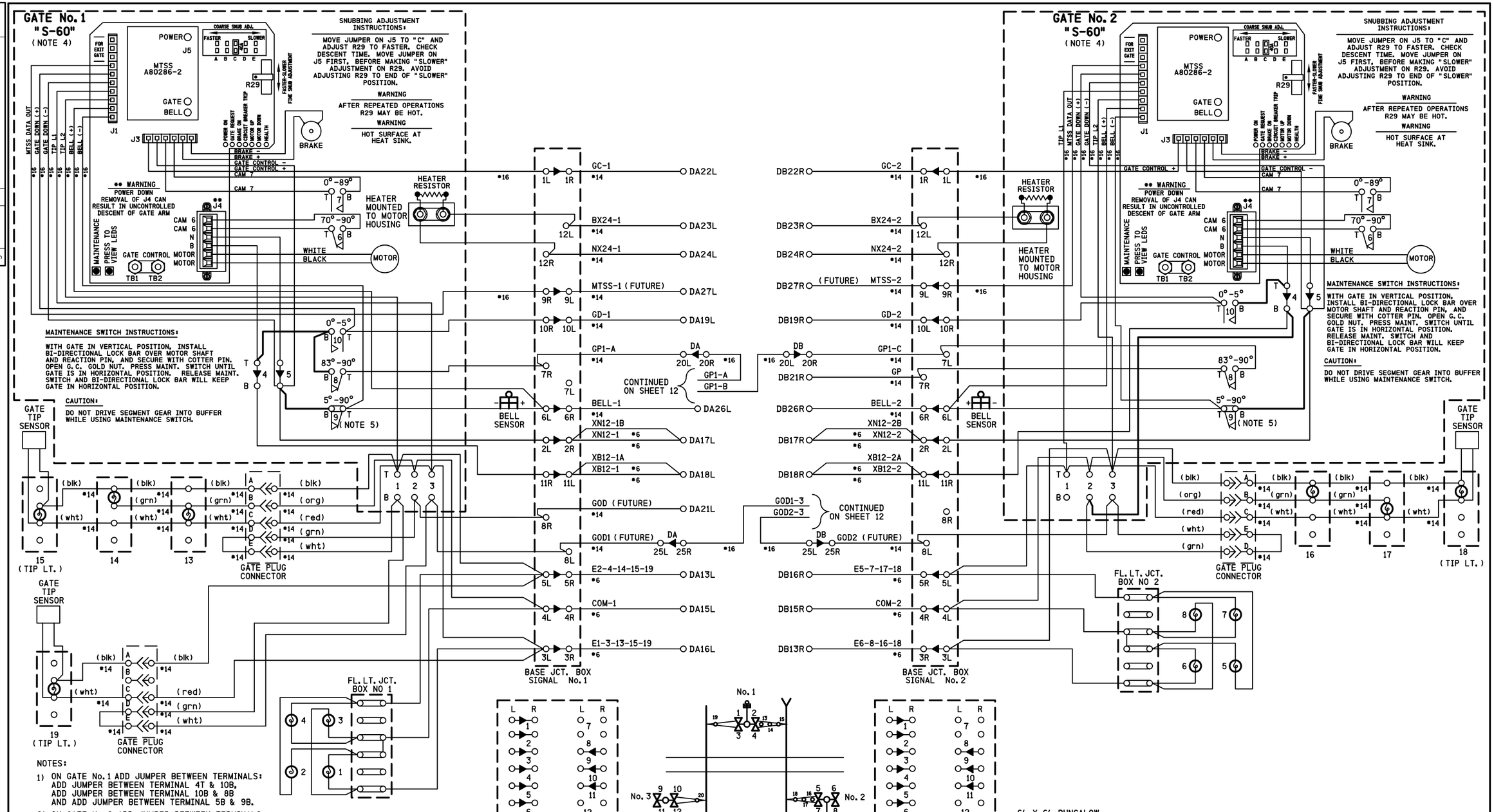

NOTES:

1) ON GATE No. 1 ADD JUMPER BETWEEN TERMINALS:
   ADD JUMPER BETWEEN TERMINAL 4T & 10B,
   ADD JUMPER BETWEEN TERMINAL 10B & 8B
   AND ADD JUMPER BETWEEN TERMINAL 5B & 9B.
2) ON GATE No. 2 ADD JUMPER BETWEEN TERMINALS:
   ADD JUMPER BETWEEN TERMINAL 4T &10B,
   ADD JUMPER BETWEEN TERMINAL 5B & 9B,
   AND ADD JUMPER BETWEEN TERMINAL 4B & 2B.
3) ALL WIRING #10 AWG MINIMUM UNLESS OTHERWISE NOTED. WIRE SIZES SHOWN ARE MINIMUM GAUGE.
4) GATE DESCENT TIME (RELEASE FROM VERTICAL TO FULLY HORIZONTAL) TO BE WITHIN 11 SECONDS.
5) BELL CUT-OUT (5°-90°) WHEN REQUIRED REMOVE STRAP BETWEEN 9B AND 9T.
6) ENSURE ALL TERMINALS HAVE TWO SHOULDER NUTS.

6' X 6' BUNGALOW

PROPOSED D	M	Y	REVISIONS	D	C	COMPLETED D	M	Y	C

REGION SOUTHERN
SUB. LEITHTON 332

SIGNALS AND COMMUNICATIONS HOMEWOOD
05 MAY 2010
DES. MKN
CH. DTB

GATE MECHANISM CONTROL CIRCUITS
SAFETRAN MODEL S-60
OLD SHOE FACTORY ROAD
SUTTON, IL

LEI-041. 90-11

SAFETRAN SYSTEM CORP.
LOUISVILLE DIVISION, LOUISVILLE, KY

SAFETRAN SYSTEMS CORPORATION			
DES.: MKN	DATE: 05-05-10	JOB NO.: JXXE01495	
CKD.: DTB	ISSUE DATE: N/A	EST. NO.:	
DRN.: DL	PLAN NO.: N/A	SHEET 11 OF 15	
P TIME: 16:58	P DATE: 15-JUL-2011	CAD ID.: LEI-041. 90-11	

$WATERMARK

REVISIONS				
NO.	DATE	BY	DESCRIPTION	APP. BY
1				
2				
3				
4				
5				

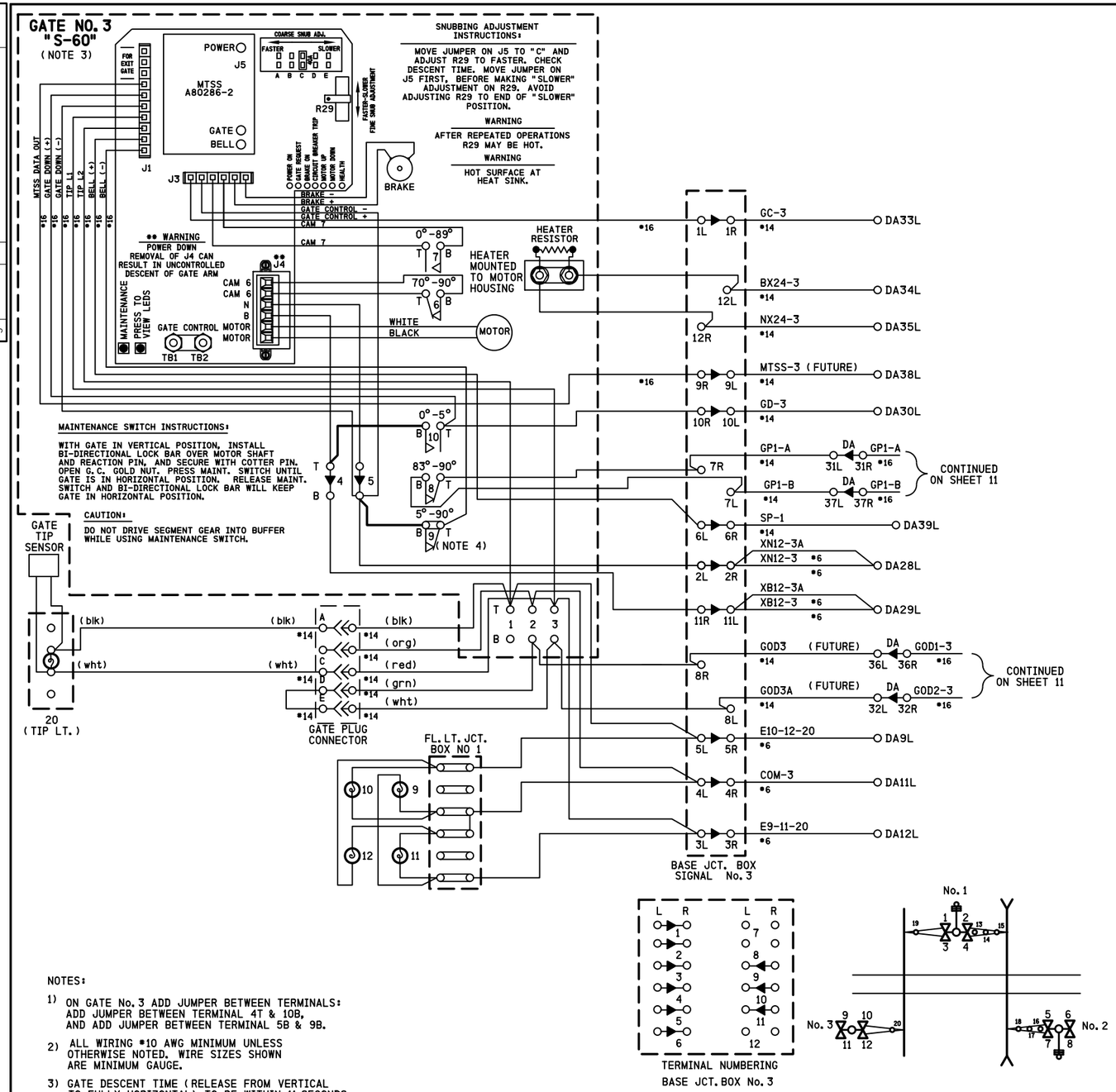

NOTES:

1) ON GATE No. 3 ADD JUMPER BETWEEN TERMINALS: ADD JUMPER BETWEEN TERMINAL 4T & 10B, AND ADD JUMPER BETWEEN TERMINAL 5B & 9B.

2) ALL WIRING #10 AWG MINIMUM UNLESS OTHERWISE NOTED. WIRE SIZES SHOWN ARE MINIMUM GAUGE.

3) GATE DESCENT TIME (RELEASE FROM VERTICAL TO FULLY HORIZONTAL) TO BE WITHIN 11 SECONDS.

4) BELL CUT-OUT (5°-90°) WHEN REQUIRED REMOVE STRAP BETWEEN 9B AND 9T.

5) ENSURE ALL TERMINALS HAVE TWO SHOULDER NUTS.

6' X 6' BUNGALOW

PROPOSED D	PROPOSED M	PROPOSED Y	REVISIONS	D	C	COMPLETED D	COMPLETED M	COMPLETED Y	C

REGION SOUTHERN

SUB. LEITHTON 332

SIGNALS AND COMMUNICATIONS HOMEWOOD

05 MAY 2010

DES. MKN

CH. DTB

GATE MECHANISM CONTROL CIRCUITS
SAFETRAN MODEL S-60
OLD SHOE FACTORY ROAD
SUTTON, IL

LEI-041. 90-12

SAFETRAN SYSTEM CORP.
LOUISVILLE DIVISION, LOUISVILLE, KY

lei-041. 90-12. dgn
15-JUL-2011

SAFETRAN SYSTEMS CORPORATION

DES.: MKN	DATE: 05-05-10	JOB NO.: JXXE01495	
CKD.: DTB	ISSUE DATE: N/A	EST. NO.:	
DRN.: DL	PLAN NO.: N/A	SHEET 12 OF 15	
P TIME: 16:58	P DATE: 15-JUL-2011	CAD ID.: LEI-041. 90-12	

$WATERMARK

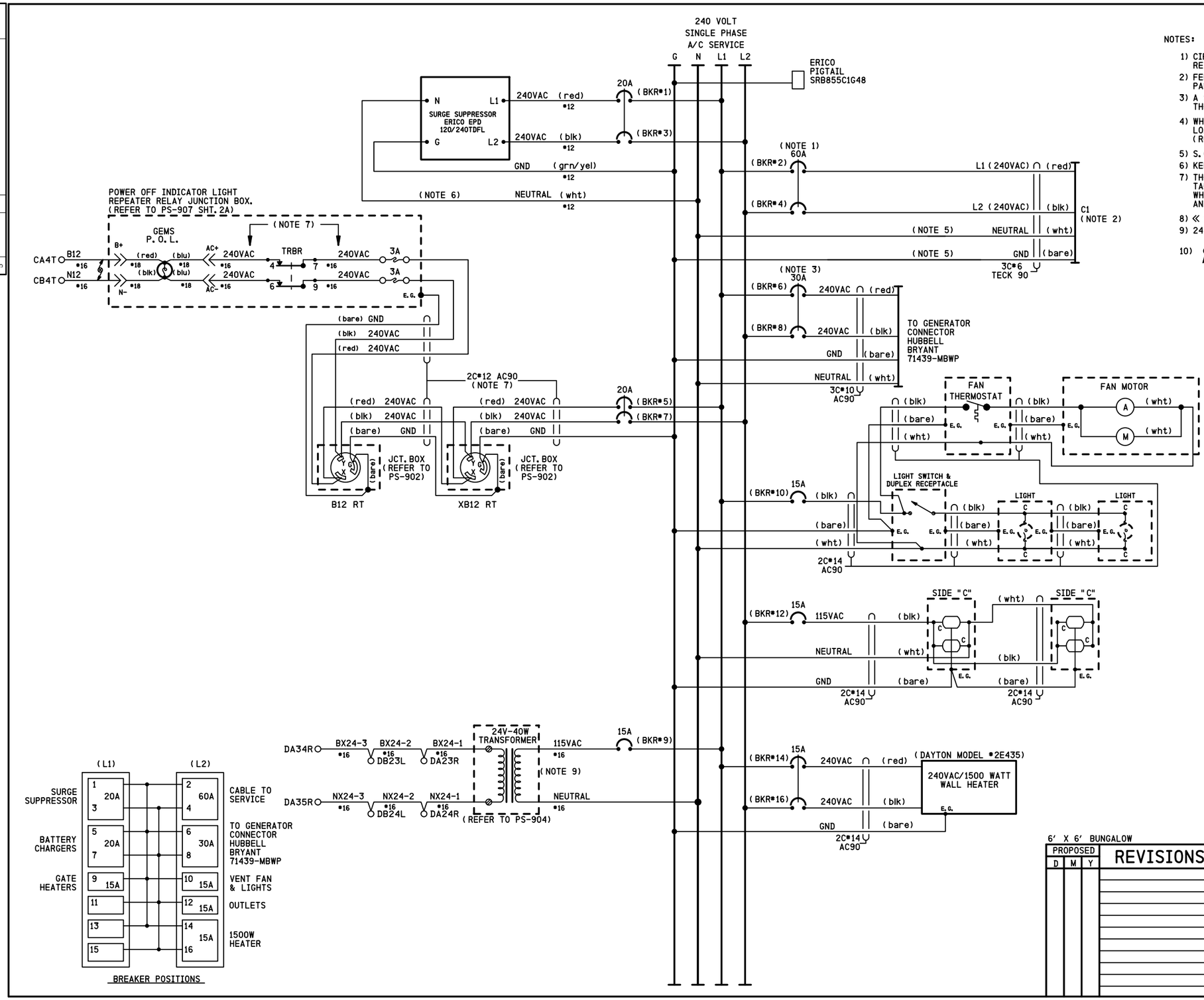

NOTES:

1) CIRCUIT BREAKER NOT TO EXCEED 60 AMPERES. RETAINING KIT PK4MB2LA MUST BE USED WITH 60A BREAKER.
2) FEEDER CIRCUIT BREAKER, AT STUB POLE SERVICE PANEL, NOT TO EXCEED 60 AMPERES.
3) A SWITCH TRANSFER KIT MUST BE INSTALLED BETWEEN THE SERVICE DISCONNECT BREAKER AND THE GENERATOR HOOK UP.
4) WHERE SEPARATE GROUND WIRE EXISTS BETWEEN THE SERVICE AND THE LOAD CENTER, REMOVE THE BRASS COLORED BONDING SCREW. (REFER TO SCHEMATIC ON BOX COVER FOR EXACT LOCATION)
5) S.C.#6 STRANDED, CSA TYPE R90 (X-LINK)
6) KEEP LEADS AS SHORT AS POSSIBLE
7) THE WHITE CONDUCTOR MUST BE MADE PERMANENTLY UNIDENTIFIABLE BY TAPING THIS CONDUCTOR RED. TAPING MUST BE CONTINUOUS WHERE THE SEPARATE CONDUCTORS HAVE BEEN MADE ACCESSIBLE AND VISIBLE.
8) « DENOTES WAGO TERMINAL
9) 24 VOLT - 40 WATT TRANSFORMER (CN STOCK #02-45-367)
10) DENOTES TWISTED PAIR.

PROPOSED
DES. No. _____
RED-IN YELLOW-OUT
AS INSTALLED
DATE _____
BY _____

6' X 6' BUNGALOW

PROPOSED D	M	Y	REVISIONS	D	C	COMPLETED D	M	Y	C

REGION SOUTHERN
SUB. LEITHTON 332

SIGNALS AND COMMUNICATIONS HOMEWOOD
05 MAY 2010
DES. MKN
CH. DTB

POWER DISTRIBUTION
AC
OLD SHOE FACTORY ROAD
SUTTON, IL

LEI-041. 90-13

SAFETRAN SYSTEM CORP.
LOUISVILLE DIVISION, LOUISVILLE, KY

lei-041. 90-13. dgn
15-JUL-2011

REVISIONS				
NO.	DATE	BY	DESCRIPTION	APP. BY
1				
2				
3				
4				
5				

SAFETRAN SYSTEMS CORPORATION

DES. : MKN	DATE: 05-05-10	JOB NO.: JXXXE01495	
CKD. : DTB	ISSUE DATE: N/A	EST. NO.:	
DRN. : DL	PLAN NO.: N/A	SHEET 13 OF 15	
P TIME: 16:58	P DATE: 15-JUL-2011	CAD ID.: LEI-041. 90-13	

$WATERMARK

REVISIONS				
NO.	DATE	BY	DESCRIPTION	APP. BY
1				
2				
3				
4				
5				

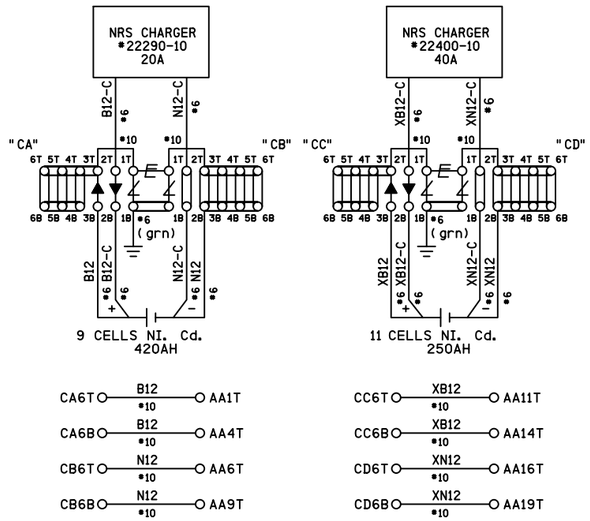

lei-041.90-14.dgn
15-JUL-2011

SAFETRAN SYSTEMS CORPORATION			
DES. : MKN	DATE: 05-05-10	JOB NO.: JXXE01495	
CKD. : DTB	ISSUE DATE: N/A	EST. NO. :	
DRN. : DL	PLAN NO.: N/A	SHEET 14 OF 15	
P TIME: 16:58	P DATE: 15-JUL-2011	CAD ID.: LEI-041.90-14	

PROPOSED
DES. No. _____
RED-IN YELLOW-OUT
AS INSTALLED
DATE _____
BY _____

6' X 6' BUNGALOW

PROPOSED D	PROPOSED M	PROPOSED Y	REVISIONS	D	C	COMPLETED D	COMPLETED M	COMPLETED Y	C

REGION SOUTHERN
SUB. LEITHTON 332

SIGNALS AND COMMUNICATIONS HOMEWOOD
05 MAY 2010
DES. MKN
CH. DTB

POWER DISTRIBUTION
DC
OLD SHOE FACTORY ROAD
SUTTON, IL

LEI-041.90-14

SAFETRAN SYSTEM CORP.
LOUISVILLE DIVISION, LOUISVILLE, KY

$WATERMARK

lei-041.90-15.dgn
20-JUL-2011

DOT: 260525J	LEITHTON MP 41.90		
EQUIPMENT	QUADRANT		
	NW	SE	SW
FLS	-	-	-
GATE (MODEL)	SAFETRAN S-60	SAFETRAN S-60	SAFETRAN S-60
OFFSET GATE (FT')	18	18	6
WTF COMBO - CANTILEVER (FT')	-	-	-
ADDITIONAL LIGHTS	-	-	-
BELL	X	X	-
X BUCKS	X	X	X
MULTIPLE TRACK SIGNS	X	X	X

HOUSE CABLE ASSIGNMENTS	
DEVICE	CABLE(S)
SIGNAL #1	7C #6, 9C #14
SIGNAL #2	7C #6, 9C #14
SIGNAL #3	7C #6, 9C #14
T1-1, T2-1	2C #6 TW
R1-1, R2-1	2C #6 TW
T1-2, T2-2	2C #6 TW
R1-2, R2-2	2C #6 TW
AC POWER	3C #6

GUIDELINES FOR CROSSING WARNING TIME AND APPROACH DISTANCE CALCULATIONS	
MAX SPEED IN MPH	45
CT IN SECONDS	0
BUFFER TIME IN SECONDS	5
TOTAL WARNING TIME IN SECONDS	25
ERT IN SECONDS	5
APT IN SECONDS	0
TOTAL APPROACH TIME IN SECONDS	35
APPROACH DISTANCE IN FEET	2310
SPEED IN FPS	66
CLEARANCE TIME CALCULATION	
LONGEST DISTANCE IN FEET (35 FEET MINIMUM)	--
CT IN SECONDS	--
APT - ADVANCED PRE-EMPTION ERT - EQUIPMENT RESPONSE TIME CT - CLEARANCE TIME	

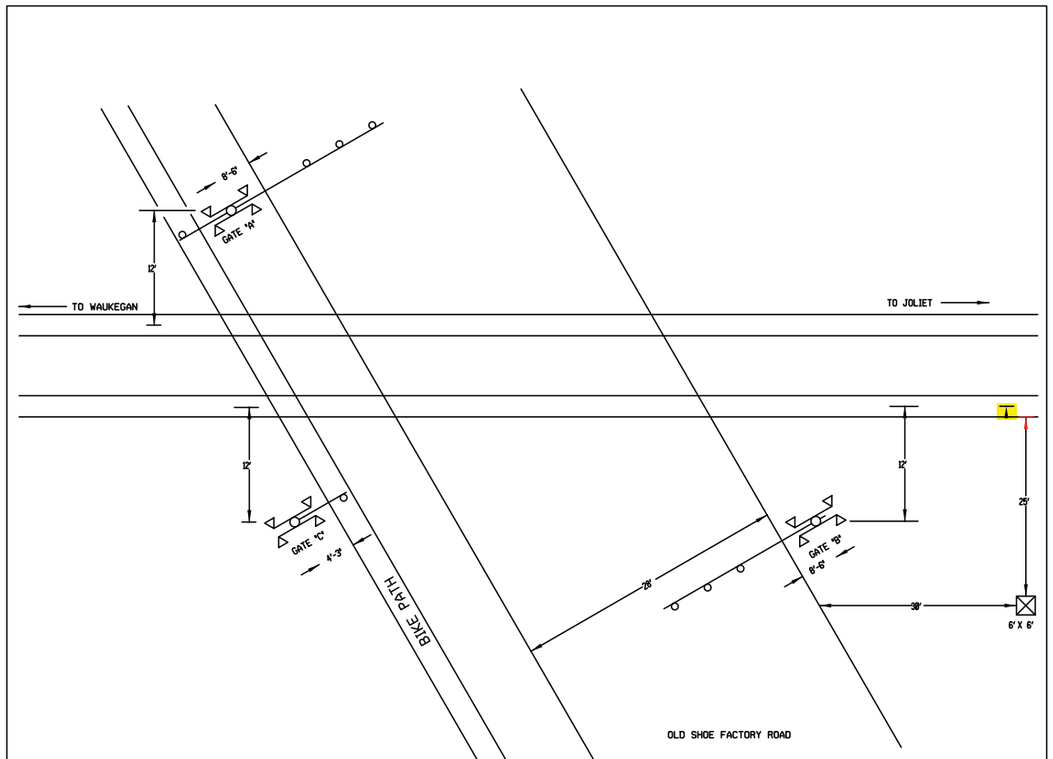

CROSSING DETAIL

PROPOSED
DES. No. _____
RED-IN YELLOW-OUT
AS INSTALLED
DATE _____
BY _____

6' X 6' BUNGALOW

PROPOSED D	M	Y	REVISIONS	D	C	COMPLETED D	M	Y	C

REGION SOUTHERN
SUB. LEITHTON 332
CN

SIGNALS AND COMMUNICATIONS HOMEWOOD
05 MAY 2010
DES. MKN
CH. DTB

CROSSING DETAIL
AND CALCULATIONS
OLD SHOE FACTORY ROAD
SUTTON, IL

LEI-041.90-15

15

SAFETRAN SYSTEM CORP.
LOUISVILLE DIVISION, LOUISVILLE, KY

REVISIONS				
NO.	DATE	BY	DESCRIPTION	APP. BY
1				
2				
3				
4				
5				

SAFETRAN SYSTEMS CORPORATION

DES. : MKN	DATE: 05-05-10	JOB NO.:JXXE01495
CKD. : DTB	ISSUE DATE: N/A	EST. NO.:
DRN. : DL	PLAN NO.:N/A	SHEET 15 OF 15
P TIME:08:11	P DATE: 20-JUL-2011	CAD ID.:LEI-041.90-15

PDF COPY

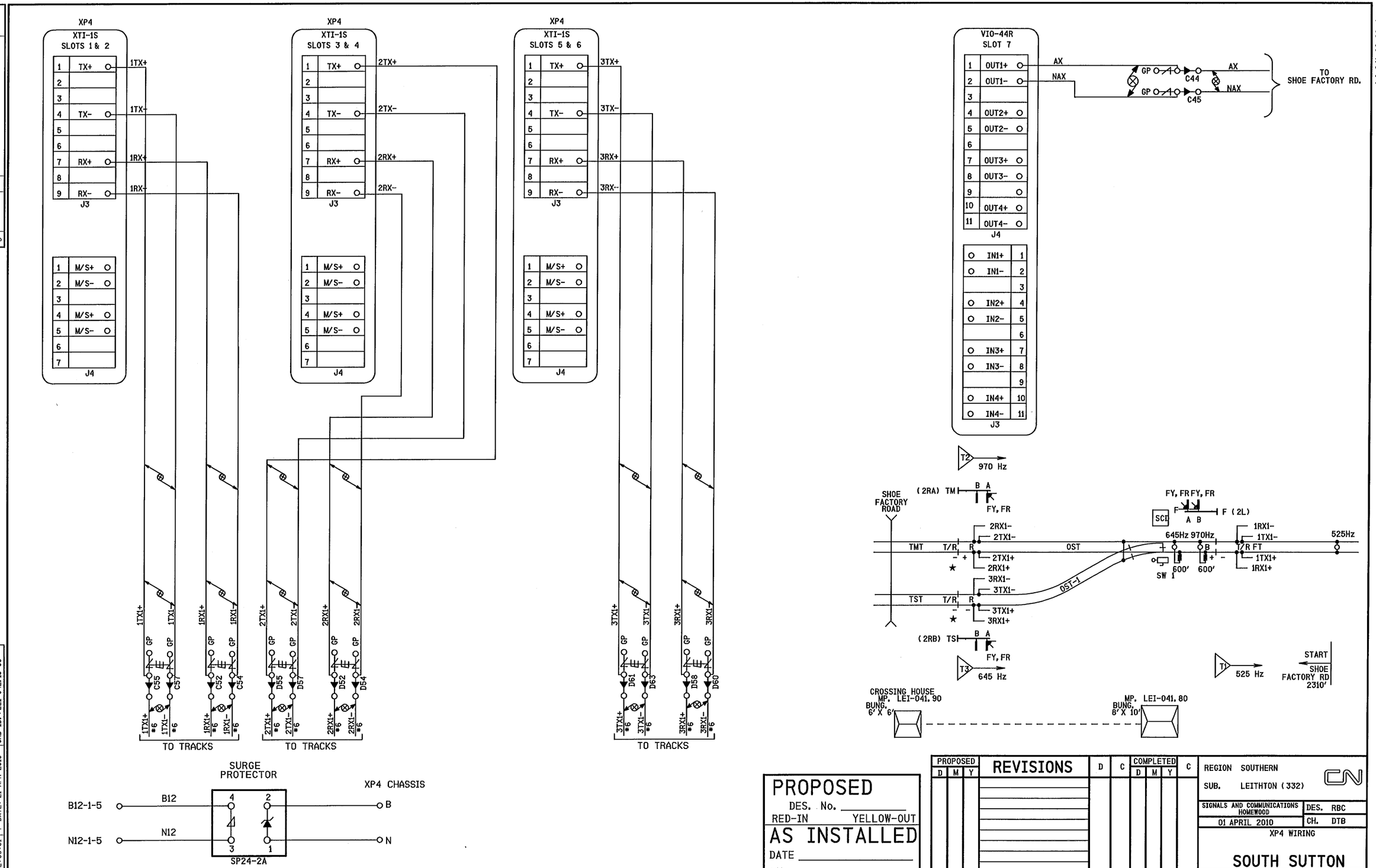

lei-041.80-09.dgn
21-APR-2010

NO.	DATE	BY	DESCRIPTION	APP. BY
1				
2				
3				
4				
5				

SAFETRAN SYSTEMS CORPORATION

DES. : RBC	DATE: 01/04/10	JOB NO. : JXXE01496	
CKD. : DTB	ISSUE DATE: N/A	EST. NO. :	
DRN. : RBC	PLAN NO. : N/A	SHEET 9 OF 28	
P TIME: 08:31	P DATE: 21-APR-2010	CAD ID. : LEI-042.15-09	

PROPOSED
DES. No. _____
RED-IN YELLOW-OUT
AS INSTALLED
DATE _____
BY _____

PROPOSED D	M	Y	REVISIONS	D	C	COMPLETED D	M	Y	C

REGION SOUTHERN
SUB. LEITHTON (332)

SIGNALS AND COMMUNICATIONS HOMEWOOD
01 APRIL 2010
DES. RBC
CH. DTB
XP4 WIRING

SOUTH SUTTON
LEI-041.80-09

PDF COPY

NO.	DATE	BY	DESCRIPTION	APP.	BY
1					
2					
3					
4					
5					

XP4 SETUP

PROGRAM NAME	SHOE FACTORY RD.(REMOTE)	CABINET ID	0000	CHECKSUM	E089	CRC	2F0B

MDR SETUP

MDR #		MDR1				MDR2				MDR3				MDR4			
WARNING TIME		32															
CW/ MD		CW				CW				CW				CW			
CWE-WT		NA				NA				NA				NA			
AUX RECVR DLY		NA				NA				NA				NA			
TRACK #		TK1	TK2	TK3	TK4	TK1	TK2	TK3	TK4	TK1	TK2	TK3	TK4	TK1	TK2	TK3	TK4
TRACK ASSIGNED		ASSIGNED	ASSIGNED	ASSIGNED													
OFFSET DISTANCE		620	270	270													
MD RESTART		5	N/A	N/A													
SUDDEN SHUNT ZONE		DISABLED	N/A	N/A													
CW/ MD		DISABLED	N/A	N/A													
		0	N/A	N/A													
		0	N/A	N/A													
CW/ MD		DISABLED	N/A	N/A													
		15	N/A	N/A													
		15	N/A	N/A													

* FIELD ADJUSTMENT

TRACK SETUP

BASIC SETUP		TRACK 1	TRACK 2	TRACK 3	TRACK 4
FREQUENCY		525 HZ	970 HZ	645 HZ	
MASTER/ SLAVE		MASTER	MASTER	MASTER	
TCA (TRANSMITTER CHECK)		*	*	*	
DIRECTION MODE		U	U	U	
LIA (LUMPED IMPEDANCE)		*	*	*	
NBS COMP RX		*	*	*	
AUTO RX		*	*	*	
APPROACH LENGTH		1690 FT	1000 FT	1000 FT	
ADVANCED SETUP		TRACK 1	TRACK 2	TRACK 3	
MOTION DET TIMER	MDEN	DISABLED	DISABLED	DISABLED	
	MDTT	NA	NA	NA	
FALSE SHUNT TIMER	FSEN	DISABLED	DISABLED	DISABLED	
	FSRX	NA	NA	NA	
	FST	NA	NA	NA	
APPROACH RELEASE TIMER	AREN	DISABLED	DISABLED	DISABLED	
	ARRX	NA	NA	NA	
	ART	NA	NA	NA	
LOSS OF SHUNT TIMER		30	30	30	
IJ-LOS TIMER		5	5	5	
MAINTENANCE MENU		TRACK 1	TRACK 2	TRACK 3	
ENABLE/ DISABLE		ENABLED	ENABLED	ENABLED	
DISABLE TIMEOUT		NA	NA	NA	
BALLAST COMP		*	*	*	
PHASE COMP		*	*	*	

ISLAND SETUP INFORMATION

TRACK #	TRACK 1	TRACK 2	TRACK 3	TRACK 4
ENABLE/ DISABLE	DISABLE	DISABLE	DISABLE	
FREQUENCY				
LOSSOF SHUNT				
FAULT DELAY				

* FIELD ADJUSTMENT

EXECUTIVE SOFTWARE INFORMATION

NAME	
REV	
PART #	
CHECKSUM	CRC
FAULT DELAY	

APPLICATION SOFTWARE INFORMATION

NAME	
REV	
CHECKSUM	CRC
CHASSIS ID#	ID STRAPPING

IXC SETUP INFORMATION

	IXC 1	IXC 2	IXC 3	IXC 4
LAMP 1 BANK				
LAMP 2 BANK				
GATE 1 DELAY				
GATE 2 DELAY				
FLASH RATE				

PROPOSED
DES. No. _____
RED-IN YELLOW-OUT
AS INSTALLED
DATE _____
BY _____

PROPOSED D	M	Y	REVISIONS	D	C	COMPLETED D	M	Y	C

REGION SOUTHERN
SUB. LEITHTON (332)
CN
SIGNALS AND COMMUNICATIONS HOMEWOOD
01 APRIL 2010
DES. RBC
CH. DTB
XP4 SETUP

SOUTH SUTTON
LEI-041.80-10

SAFETRAN SYSTEMS CORPORATION
DES.: RBC DATE: 01/04/10 JOB NO.: JXXE01496
CKD.: DTB ISSUE DATE: N/A EST. NO.:
DRN.: RBC PLAN NO.: N/A SHEET 10 OF 28
P TIME: 08:31 P DATE: 21-APR-2010 CAD ID.: LEI-042.15-10

lei-041.80-10.dgn
21-APR-2010

PDF COPY

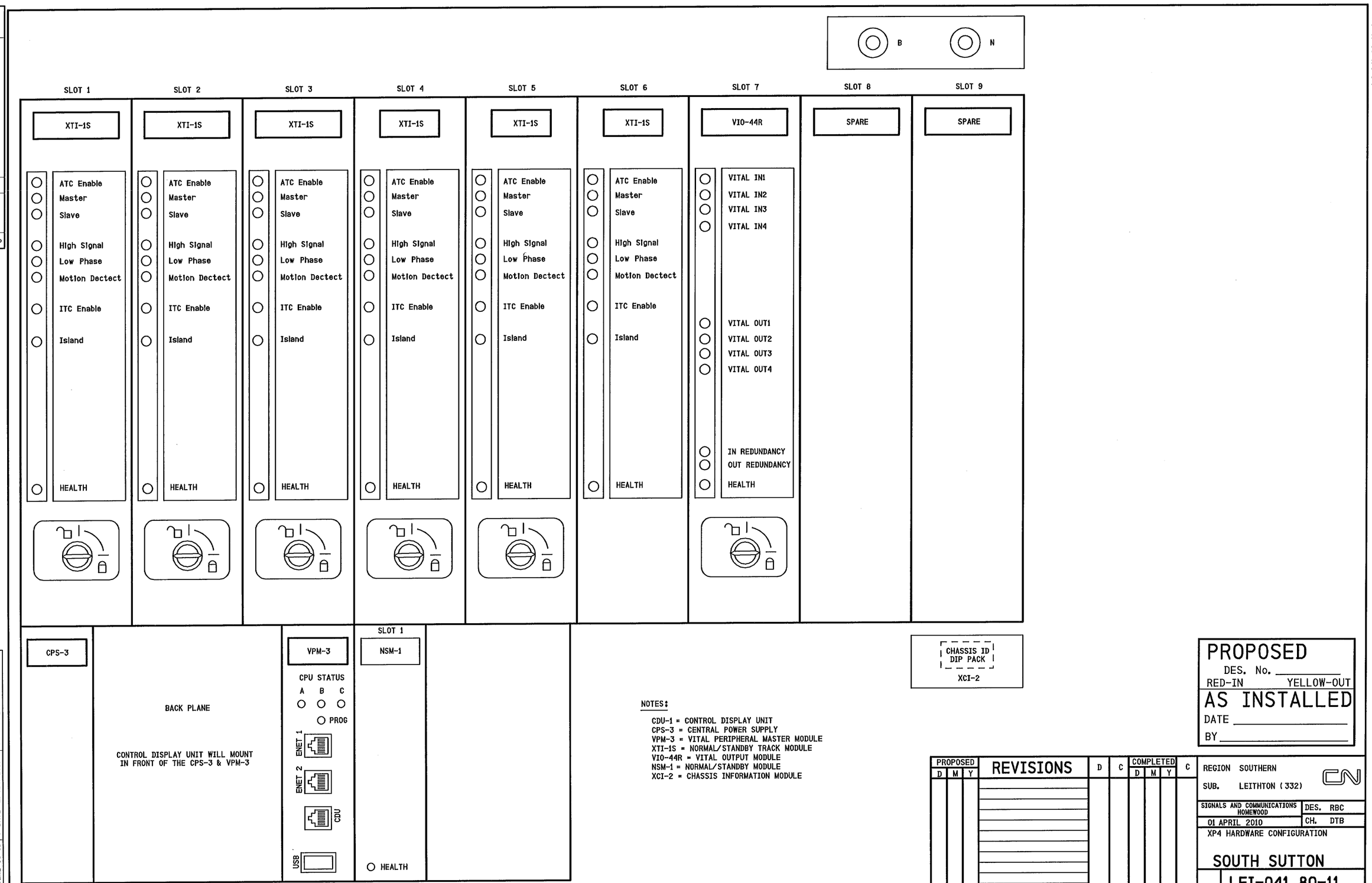

NOTES:

CDU-1 = CONTROL DISPLAY UNIT
CPS-3 = CENTRAL POWER SUPPLY
VPM-3 = VITAL PERIPHERAL MASTER MODULE
XTI-1S = NORMAL/STANDBY TRACK MODULE
VIO-44R = VITAL OUTPUT MODULE
NSM-1 = NORMAL/STANDBY MODULE
XCI-2 = CHASSIS INFORMATION MODULE

NO.	DATE	BY	DESCRIPTION	APP.	BY
1					
2					
3					
4					
5					

SAFETRAN SYSTEMS CORPORATION

DES. : RBC	DATE: 01/04/10	JOB NO. : JXXE01496	
CKD. : DTB	ISSUE DATE: N/A	EST. NO. :	
DRN. : RBC	PLAN NO. :N/A	SHEET 11 OF 28	
P TIME: 08:31	P DATE: 21-APR-2010	CAD ID. : LEI-042.15-11	

lei-041.80-11.dgn
21-APR-2010

PROPOSED
DES. No. _____
RED-IN YELLOW-OUT

AS INSTALLED
DATE _____
BY _____

PROPOSED D	M	Y	REVISIONS	D	C	COMPLETED D	M	Y	C

REGION SOUTHERN
SUB. LEITHTON (332)

SIGNALS AND COMMUNICATIONS HOMEWOOD
01 APRIL 2010
DES. RBC
CH. DTB

XP4 HARDWARE CONFIGURATION

SOUTH SUTTON

LEI-041.80-11

PDF COPY

NO.	DATE	BY	DESCRIPTION	APP. BY
1				
2				
3				
4				
5				

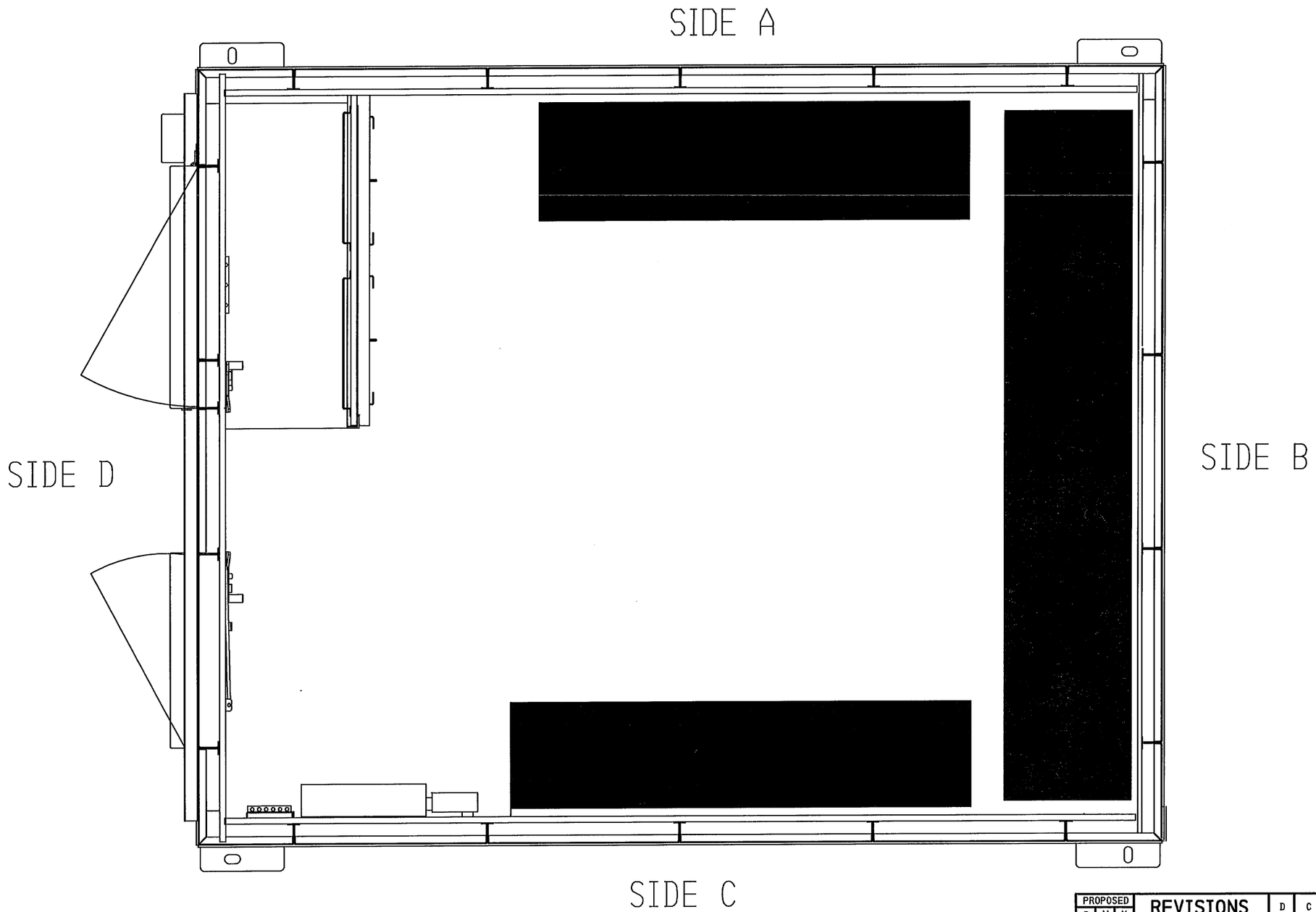

lei-041.80-21.dgn
21-APR-2010

PROPOSED
DES. No. _____
RED-IN YELLOW-OUT

AS INSTALLED
DATE _____
BY _____

PROPOSED D	M	Y	REVISIONS	D	C	COMPLETED D	M	Y	C

REGION SOUTHERN
SUB. LEITHTON (332)

SIGNALS AND COMMUNICATIONS HOMEWOOD
01 APRIL 2010

DES. RBC
CH. DTB

FLOOR PLAN
8' X 10' BUNGALOW

SOUTH SUTTON

LEI-041.80-21

SAFETRAN SYSTEMS CORPORATION

DES.: RBC	DATE: 01/04/10	JOB NO.: JXXE01496	
CKD.: DTB	ISSUE DATE: N/A	EST. NO.:	
DRN.: RBC	PLAN NO.: N/A	SHEET 21 OF 28	
P TIME: 08:31	P DATE: 21-APR-2010	CAD ID.: LEI-042.15-21	

PDF COPY

NO.	DATE	BY	DESCRIPTION	APP. BY
1				
2				
3				
4				
5				

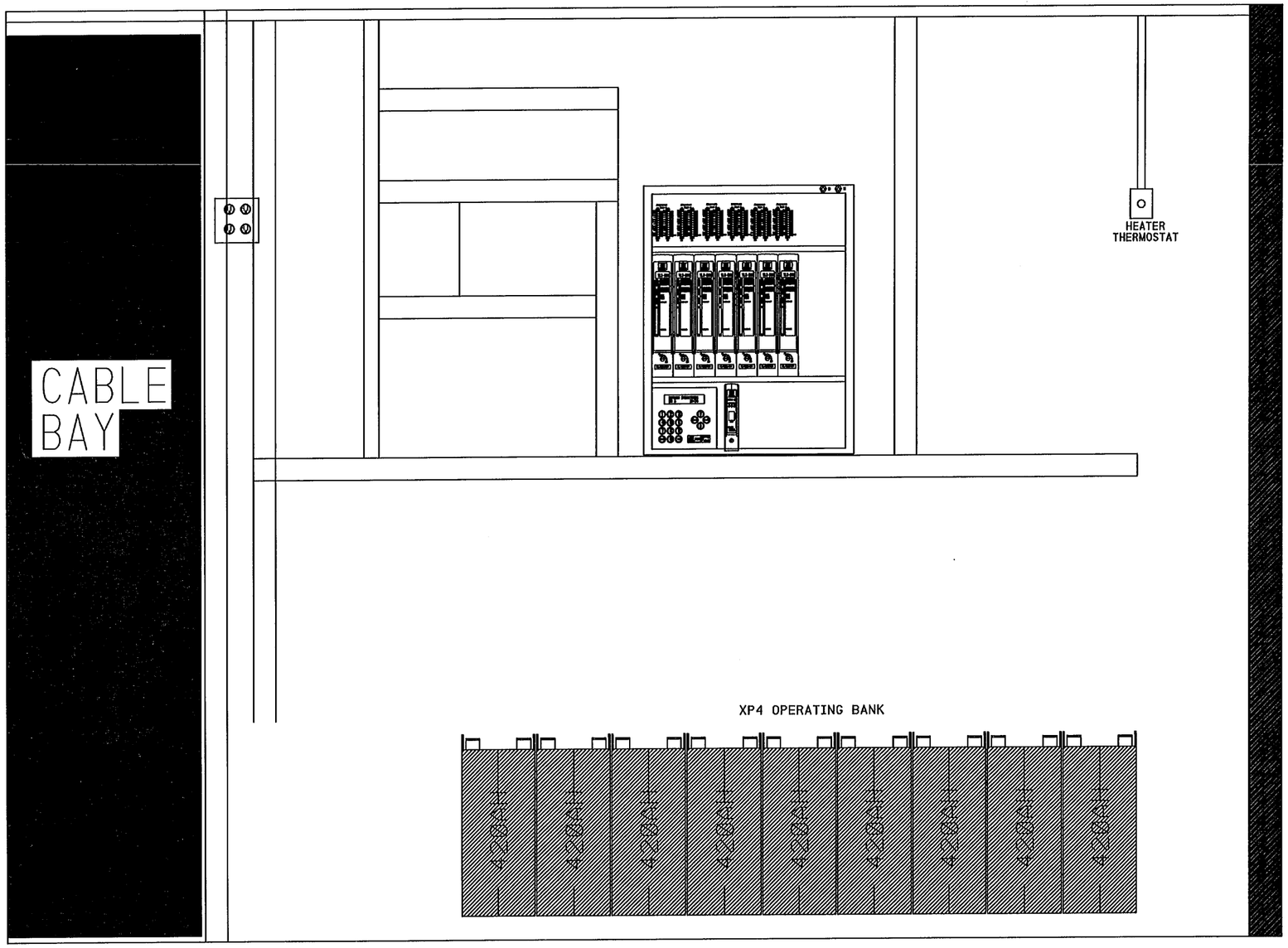

SIDE A

SAFETRAN SYSTEMS CORPORATION			
DES. : RBC	DATE: 01/04/10	JOB NO. : JXXE01496	
CKD. : DTB	ISSUE DATE: N/A	EST. NO. :	
DRN. : RBC	PLAN NO. :N/A	SHEET 22 OF 28	
P TIME:08:31	P DATE: 21-APR-2010	CAD ID. : LEI-042.15-22	

lei-041.80-22.dgn
21-APR-2010

PROPOSED
DES. No. _____
RED-IN YELLOW-OUT
AS INSTALLED
DATE _____
BY _____

PROPOSED D	M	Y	REVISIONS	D	C	COMPLETED D	M	Y	C

REGION SOUTHERN
SUB. LEITHTON (332)
CN

SIGNALS AND COMMUNICATIONS HOMEWOOD
01 APRIL 2010
DES. RBC
CH. DTB

SIDE "A"
8' X 10' BUNGALOW

SOUTH SUTTON

LEI-041.80-22

PDF COPY

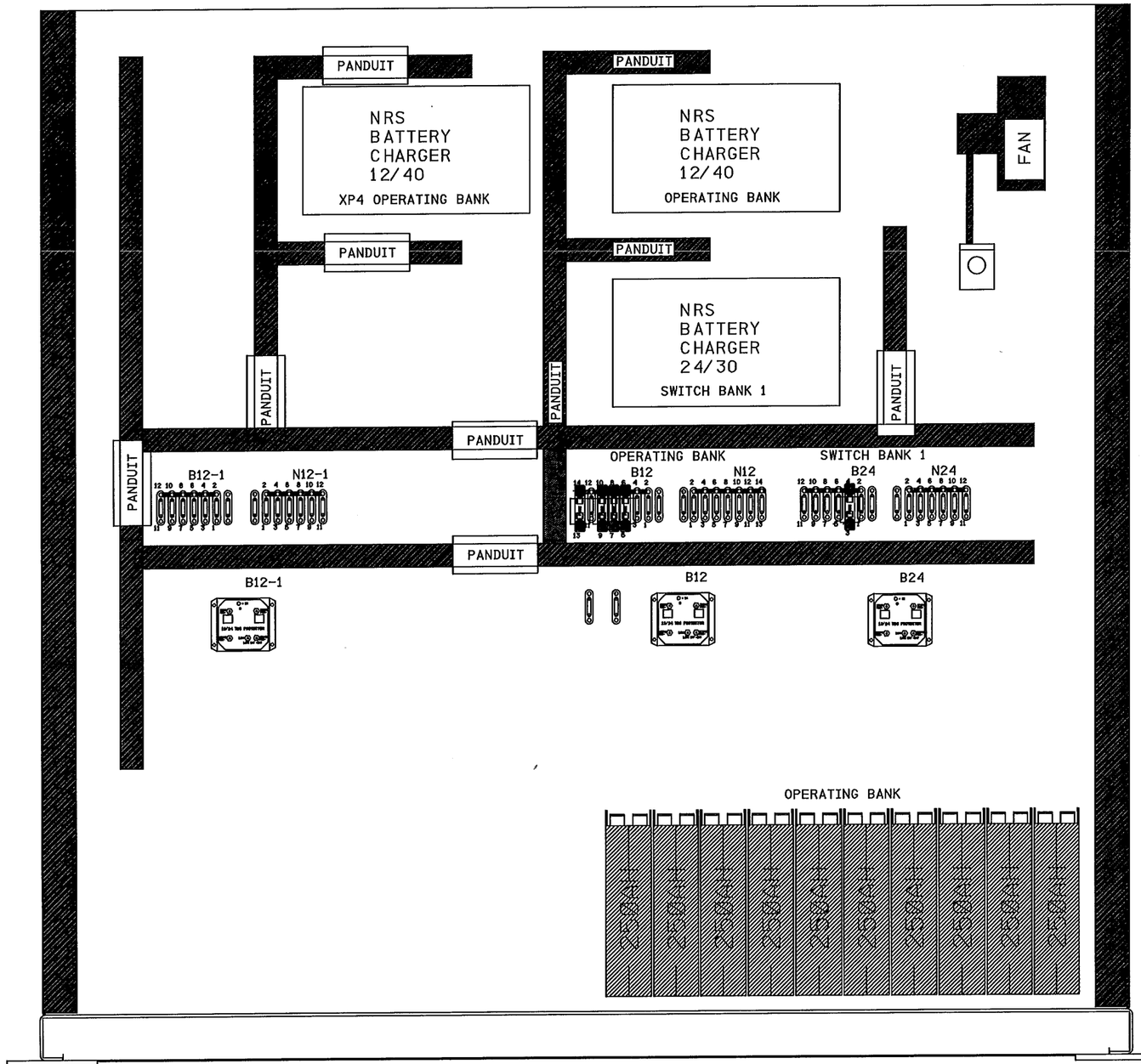

SIDE B

NO.	DATE	BY	DESCRIPTION	APP. BY
1				
2				
3				
4				
5				

SAFETRAN SYSTEMS CORPORATION

DES. : RBC	DATE: 01/04/10	JOB NO. : JXXE01496	
CKD. : DTB	ISSUE DATE: N/A	EST. NO. :	
DRN. : RBC	PLAN NO. :N/A	SHEET 23 OF 28	
P TIME: 08:32	P DATE: 21-APR-2010	CAD ID. : LEI-042.15-23	

lei-041.80-23.dgn
21-APR-2010

PROPOSED
DES. No. _____
RED-IN YELLOW-OUT
AS INSTALLED
DATE _____
BY _____

PROPOSED D	M	Y	REVISIONS	D	C	COMPLETED D	M	Y	C

REGION SOUTHERN
SUB. LEITHTON (332)

SIGNALS AND COMMUNICATIONS HOMEWOOD
01 APRIL 2010
DES. RBC
CH. DTB

SIDE "B" LAYOUT
8' X 10' BUNGALOW

SOUTH SUTTON

LEI-041.80-23

PDF COPY

NO.	DATE	BY	DESCRIPTION	APP.	BY
1					
2					
3					
4					
5					

SIDE B

SWITCH BANK 1 — OPERATING BANK — XP4 OPERATING BANK

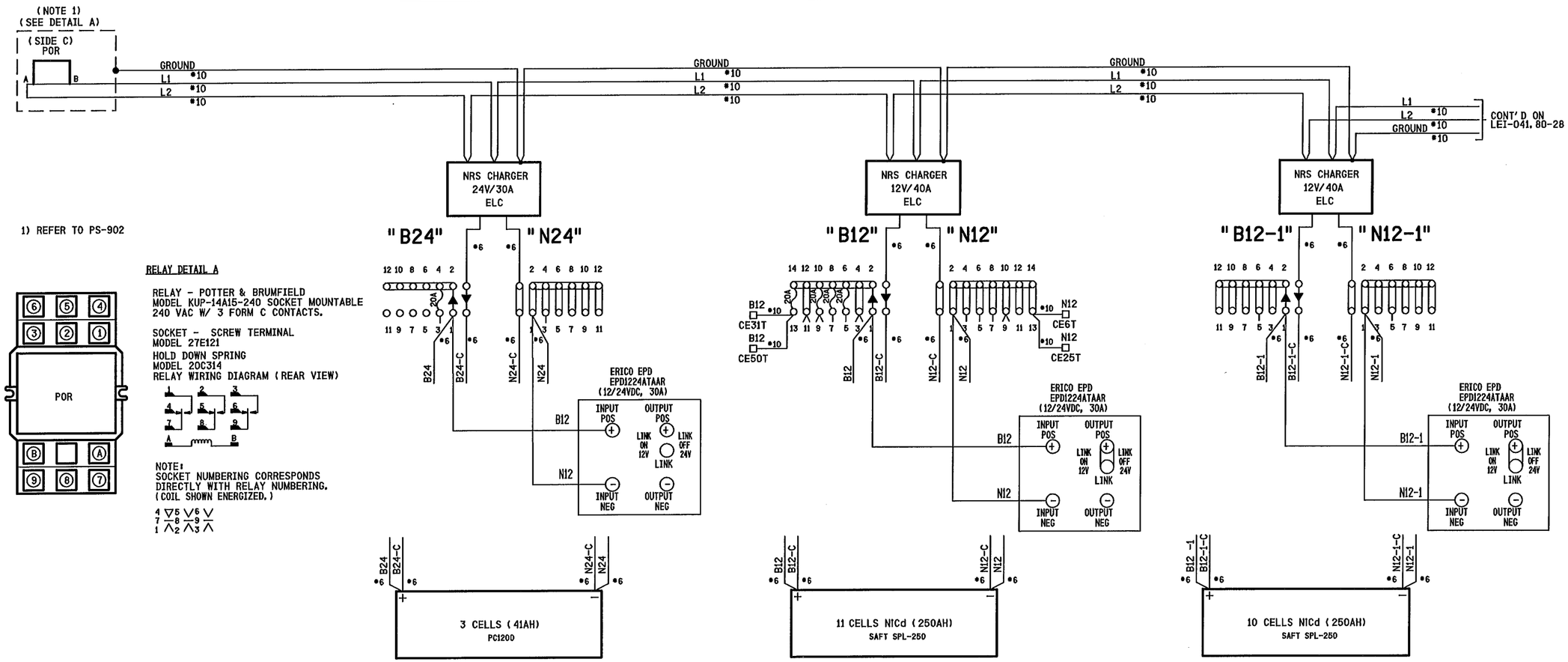

1) REFER TO PS-902

RELAY DETAIL A

RELAY - POTTER & BRUMFIELD
MODEL KUP-14A15-240 SOCKET MOUNTABLE
240 VAC W/ 3 FORM C CONTACTS.

SOCKET - SCREW TERMINAL
MODEL 27E121
HOLD DOWN SPRING
MODEL 20C314
RELAY WIRING DIAGRAM (REAR VIEW)

NOTE:
SOCKET NUMBERING CORRESPONDS DIRECTLY WITH RELAY NUMBERING.
(COIL SHOWN ENERGIZED.)

PROPOSED D	M	Y	REVISIONS	D	C	COMPLETED D	M	Y	C

PROPOSED
DES. No. _____
RED-IN YELLOW-OUT
AS INSTALLED
DATE _____
BY _____

REGION SOUTHERN
SUB. LEITHTON (332)

SIGNALS AND COMMUNICATIONS HOMEWOOD
01 APRIL 2010
DES. RBC
CH. DTB

SIDE " B" DETAIL
DC DISTRIBUTION

SOUTH SUTTON

LEI-041.80-24

lei-041.80-24.dgn
21-APR-2010

SAFETRAN SYSTEMS CORPORATION		
DES.: RBC	DATE: 01/04/10	JOB NO.: JXXE01496
CKD.: DTB	ISSUE DATE: N/A	EST. NO.:
DRN.: RBC	PLAN NO.:N/A	SHEET 24 OF 28
P TIME:08:32	P DATE: 21-APR-2010	CAD ID.: LEI-042.15-28

PDF COPY

SIDE C

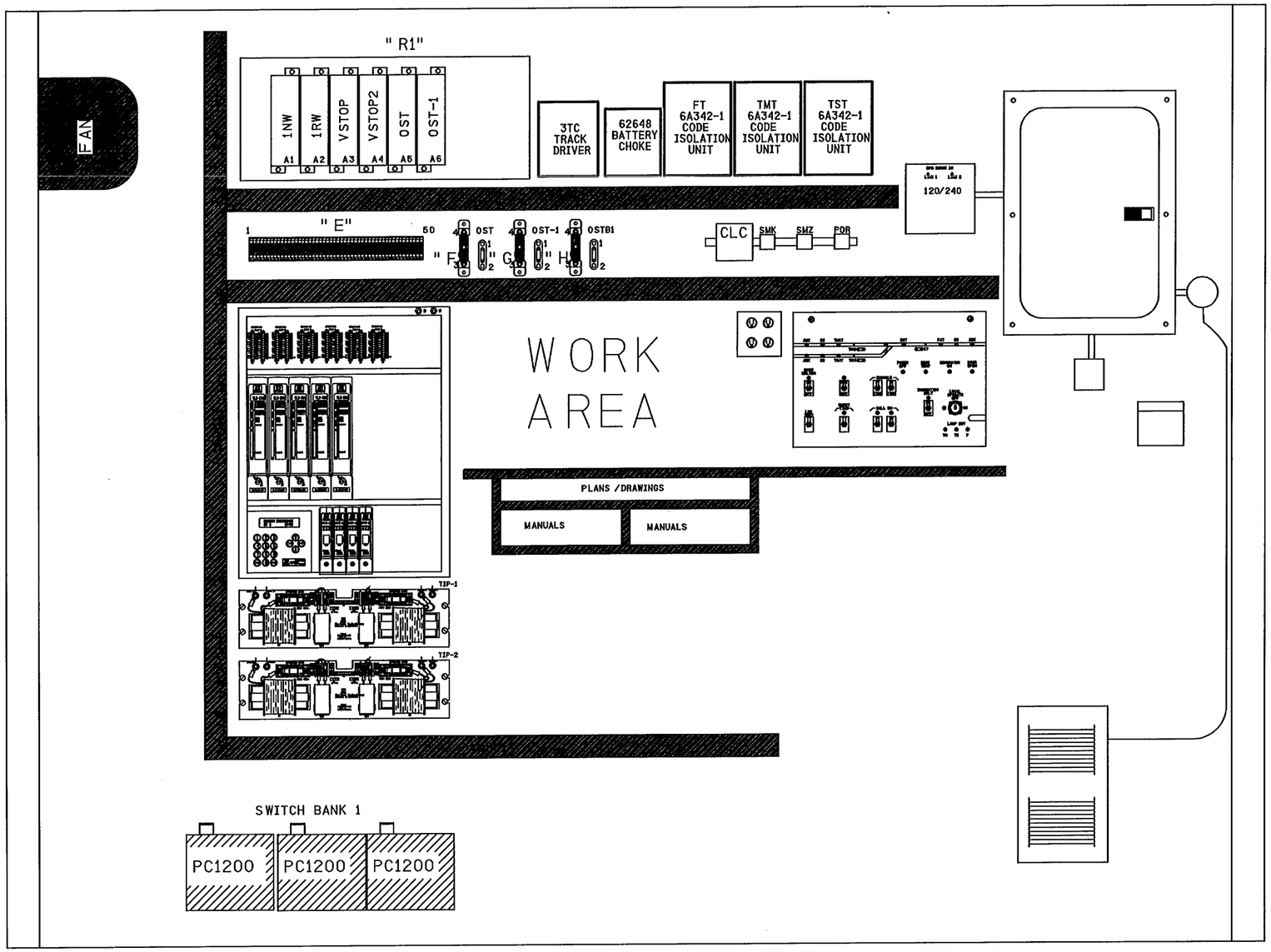

" R1"

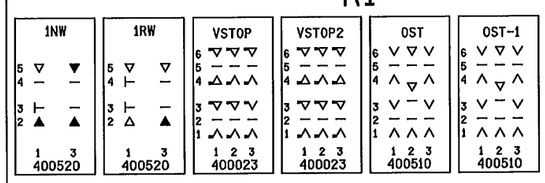

PROPOSED
DES. No. _____
RED-IN YELLOW-OUT

AS INSTALLED
DATE _____
BY _____

PROPOSED D	M	Y	REVISIONS	D	C	COMPLETED D	M	Y	C

REGION SOUTHERN
SUB. LEITHTON (332)

SIGNALS AND COMMUNICATIONS HOMEWOOD
01 APRIL 2010
DES. RBC
CH. DTB

SIDE "C" LAYOUT
8' X 10' BUNGALOW

SOUTH SUTTON

LEI-041. 80-25

lei-041. 80-25. dgn
21-APR-2010

NO.	DATE	BY	DESCRIPTION	APP. BY
1				
2				
3				
4				
5				

SAFETRAN SYSTEMS CORPORATION

DES. : RBC	DATE: 01/04/10	JOB NO. : JXXED1496	
CKD. : DTB	ISSUE DATE: N/A	EST. NO. :	
DRN. : RBC	PLAN NO. : N/A	SHEET 25 OF 28	
P TIME: 08:32	P DATE: 21-APR-2010	CAD ID. : LEI-042.15-25	

PDF COPY

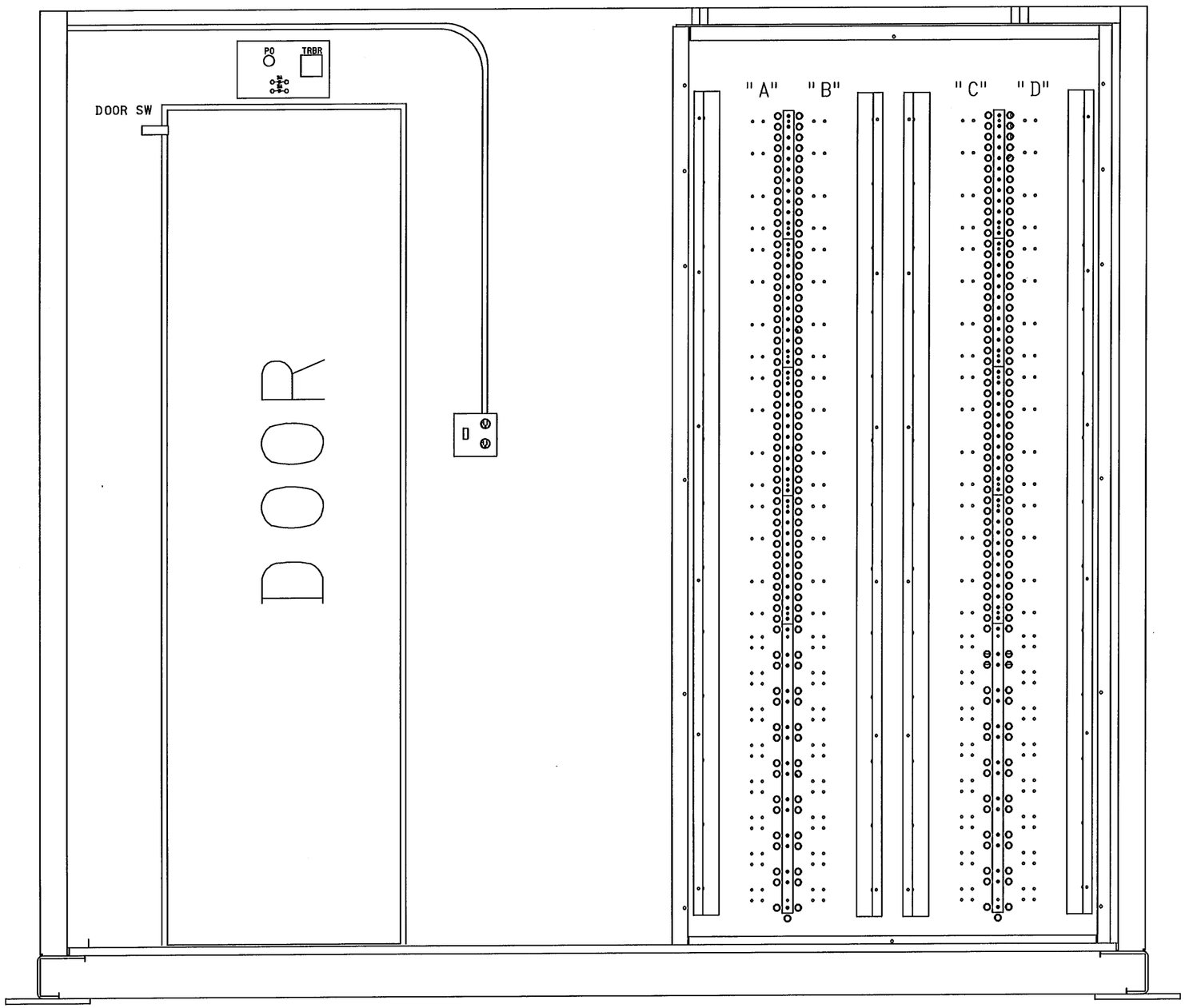

SIDE D

IND.	DATE	BY	DESCRIPTION	APP. BY
1				
2				
3				
4				
5				

SAFETRAN SYSTEMS CORPORATION			
DES. : RBC	DATE: 01/04/10	JOB NO.: JXXE01496	
CKD. : DTB	ISSUE DATE: N/A	EST. NO.:	
DRN. : RBC	PLAN NO.: N/A	SHEET 26 OF 28	
P TIME: 08:32	P DATE: 21-APR-2010	CAD ID.: LEI-042.15-26	

lei-041.80-26.dgn
21-APR-2010

PROPOSED
DES. No. _____
RED-IN YELLOW-OUT
AS INSTALLED
DATE _____
BY _____

PROPOSED D	M	Y	REVISIONS	D	C	COMPLETED D	M	Y	C

REGION SOUTHERN
SUB. LEITHTON (332)

SIGNALS AND COMMUNICATIONS HOMEWOOD — DES. RBC
01 APRIL 2010 — CH. DTB

SIDE "D" LAYOUT
8' X 10' BUNGALOW

SOUTH SUTTON

LEI-041.80-26

SAFETRAN SYSTEMS CORPORATION		
DES. : RBC	DATE: 01/04/10	JOB NO. : JXXE01496
CKD. : DTB	ISSUE DATE: N/A	EST. NO. :
DRN. : RBC	PLAN NO. :N/A	SHEET 27 OF 28
P TIME:08:32	P DATE: 21-APR-2010	CAD ID. : LEI-042.15-27

NO.	DATE	BY	DESCRIPTION	APP. BY
1				
2				
3				
4				
5				

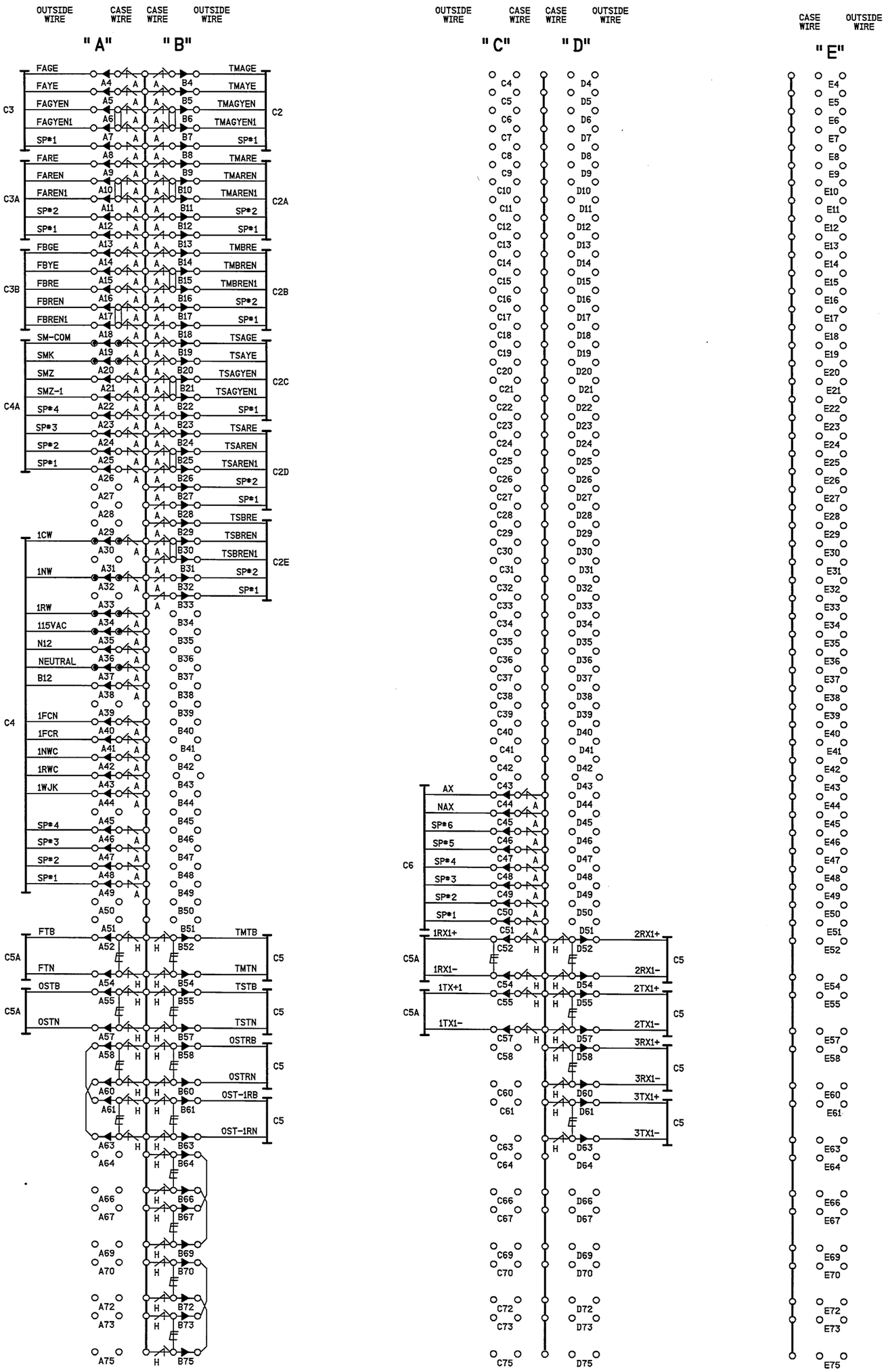

NOTES

- ● DENOTES INSULATED TERMINAL
- E DENOTES HD EQUALIZER CN# 02-32-391 SAFETRAN # 022700-1X
- A "A" DENOTES AIR GAP ARRESTOR CN# 02-25-168 SAFETRAN # 022485-28X
- H "H" DENOTES HD AIR GAP ARRESTOR CN# 02-25-006 SAFETRAN # 022585-1X
- DENOTES GROUND PLANE

PROPOSED D	M	Y	REVISIONS	D	C	COMPLETED D	M	Y	C

REGION SOUTHERN
SUB. LEITHTON (332)

SIGNALS AND COMMUNICATIONS HOMEWOOD — DES. RBC
01 APRIL 2010 — CH. DTB

MAIN TERMINAL BOARD

SOUTH SUTTON

LEI-041.80-27

PROPOSED
DES. No. _____
RED-IN YELLOW-OUT
AS INSTALLED
DATE _____
BY _____

IXS VLC EOS MAIN TERMINAL BOARD TYPICAL - REV1 2009/03/31

lei-041.80-27.dgn
21-APR-2010

PDF COPY

PDF COPY

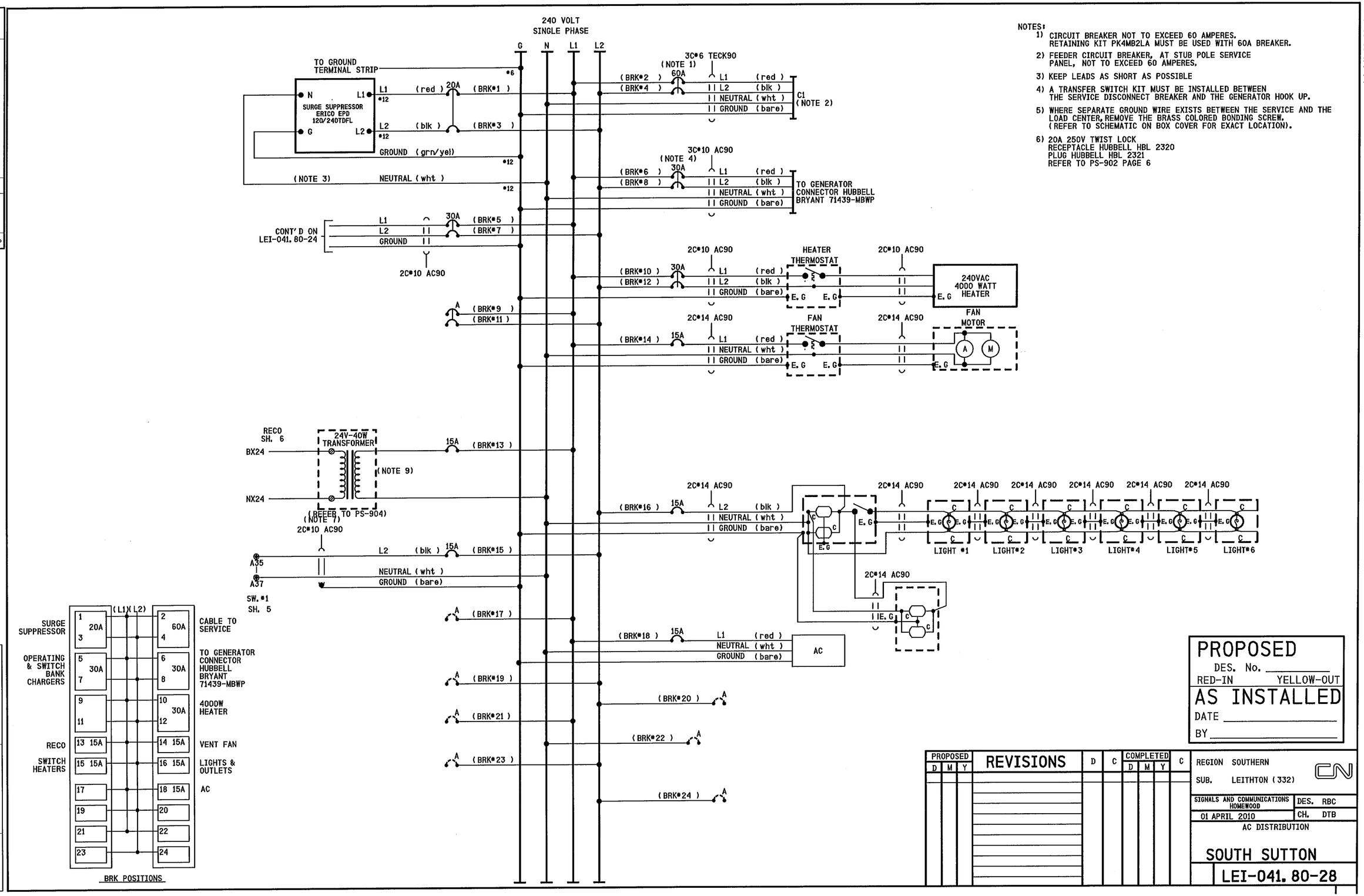

NOTES:

1) CIRCUIT BREAKER NOT TO EXCEED 60 AMPERES. RETAINING KIT PK4MB2LA MUST BE USED WITH 60A BREAKER.
2) FEEDER CIRCUIT BREAKER, AT STUB POLE SERVICE PANEL, NOT TO EXCEED 60 AMPERES.
3) KEEP LEADS AS SHORT AS POSSIBLE
4) A TRANSFER SWITCH KIT MUST BE INSTALLED BETWEEN THE SERVICE DISCONNECT BREAKER AND THE GENERATOR HOOK UP.
5) WHERE SEPARATE GROUND WIRE EXISTS BETWEEN THE SERVICE AND THE LOAD CENTER, REMOVE THE BRASS COLORED BONDING SCREW. (REFER TO SCHEMATIC ON BOX COVER FOR EXACT LOCATION).
6) 20A 250V TWIST LOCK
RECEPTACLE HUBBELL HBL 2320
PLUG HUBBELL HBL 2321
REFER TO PS-902 PAGE 6

lei-041.80-28.dgn
21-APR-2010

NO.	DATE	BY	DESCRIPTION	APP. BY
1				
2				
3				
4				
5				

PROPOSED
DES. No. _____
RED-IN YELLOW-OUT
AS INSTALLED
DATE _____
BY _____

PROPOSED D	M	Y	REVISIONS	D	C	COMPLETED D	M	Y	C

REGION SOUTHERN
SUB. LEITHTON (332)
SIGNALS AND COMMUNICATIONS HOMEWOOD
DES. RBC
01 APRIL 2010
CH. DTB
AC DISTRIBUTION
SOUTH SUTTON
LEI-041.80-28

SAFETRAN SYSTEMS CORPORATION
DES.: RBC | DATE: 01/04/10 | JOB NO.: JXXE01496
CKD.: DTB | ISSUE DATE: N/A | EST. NO.:
DRN.: RBC | PLAN NO.: N/A | SHEET 28 OF 28
P TIME: 08:32 | P DATE: 21-APR-2010 | CAD ID.: LEI-042.15-28