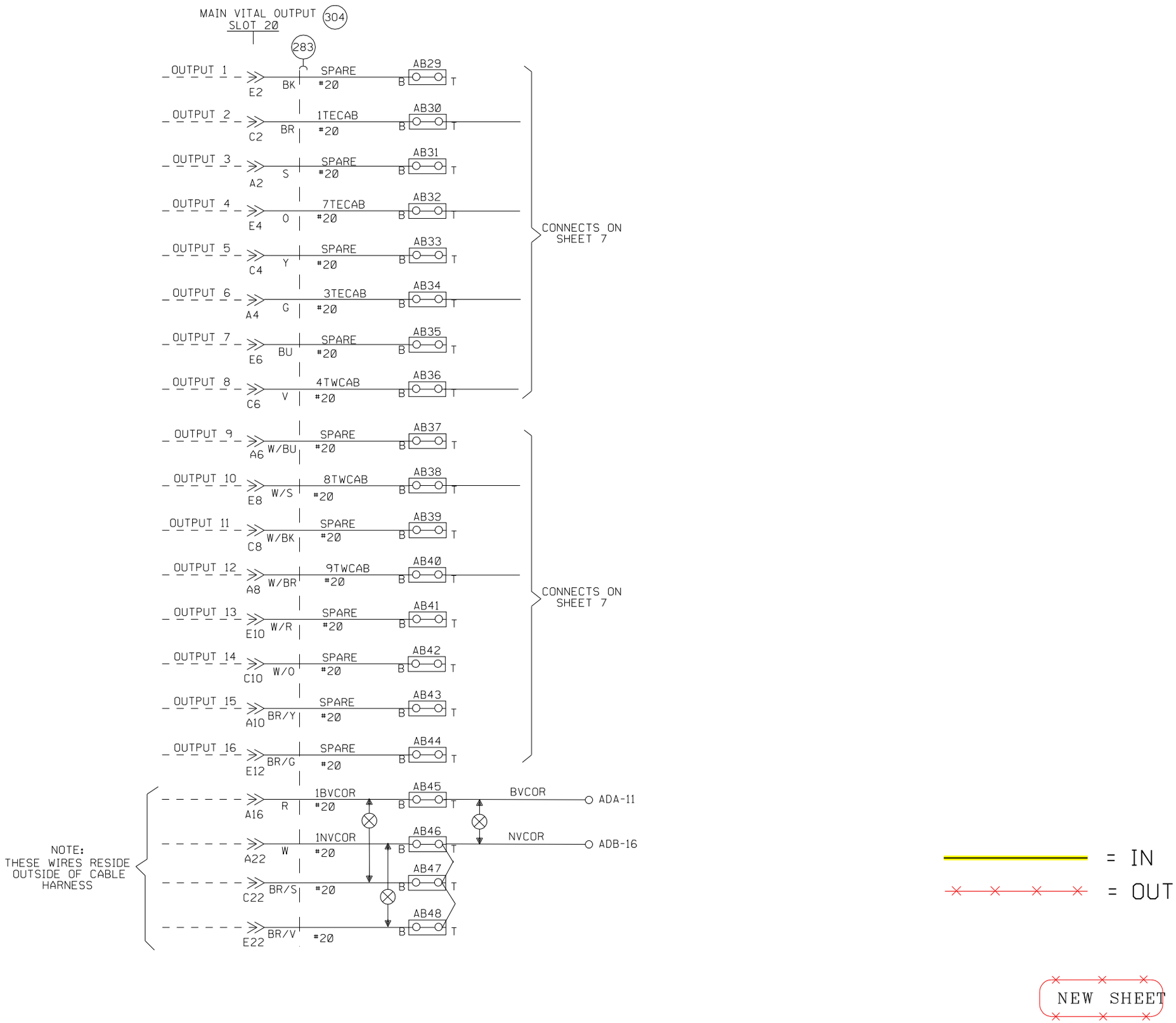

				Designed: 03/01/09 CHICAGO CREATE PROJECT B2-PHASE 2 Rec#: WO#:89793 IS: /MWK / /RC /MDF	Designed: 05/01/08 CHICAGO CREATE PROJECT B2-PHASE 1 Rec#: WO#:89792 IS: /MWK / /RC /MDF	MODIFICATION LEVEL Q.A. LAST LEVEL CHECKED DQ LAST LEVEL MOD THIS TYPICAL DQ LAST LEVEL BY DESIGNER DR CHANGED FROM TYPICAL? Y REV 02/01/08 M24SUPX0.7	UNION PACIFIC QUALITY PRODUCTIVITY SAFETY SIGNAL DESIGN	Date: 05-01-08 Des: RC Chk: RC AFE: 89792	UNION PACIFIC RAILROAD PARK, ILLINOIS 8'X16' SLAVE 2 HOUSE GENEVA SUBDIVISION Office of Sr AVP Engineering - Signal/TCO Omaha, Nebraska	Sh.: 6 C.P. Y015 MP: 15.25 ID: GEN1525.6S

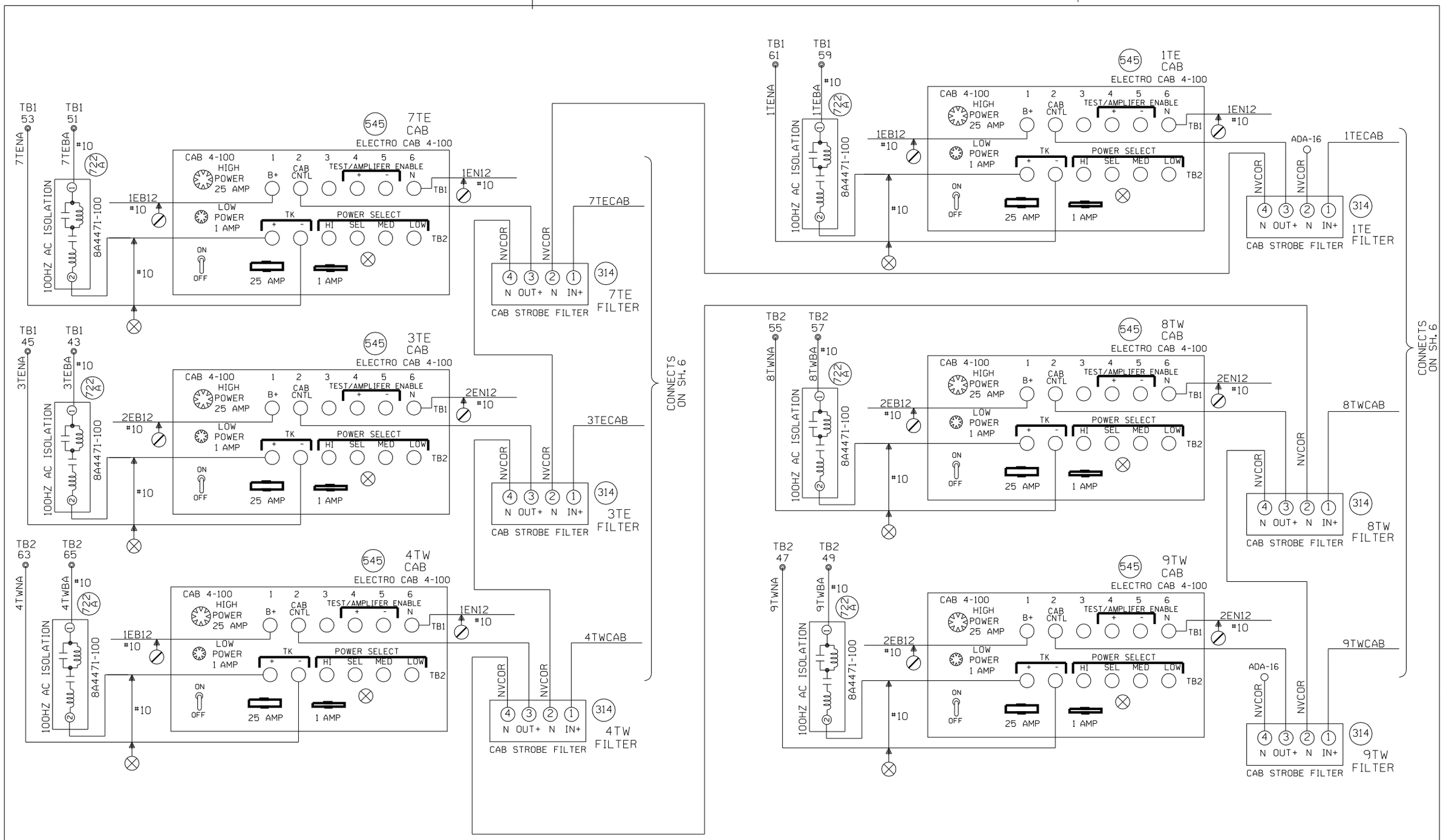

CONTINUOUS CAB (420 IN)	
S1	S2
1 2 3 4	1 2 3 4

DIP SHUNT CONFIGURATION	
■ PUNCH OUT	□ DO NOT PUNCH OUT

U545

DIPSHUNTS LOCATED ON WAVEFORM GENERATOR MODULE.

= IN

= OUT

NOTES:

⊗ = TWISTED WIRES

⊘ = OBSERVE CORRECT POLARITY. EQUIPMENT WILL BE DAMAGED IF CONNECTIONS ARE REVERSED.

NEW SHEET

Designed: 03/01/09 CHICAGO CREATE PROJECT B2-PHASE 2 Rec#: WO#:89793 IS: /MWK /RC /MDF	Designed: 05/01/08 CHICAGO CREATE PROJECT B2-PHASE 1 Rec#: WO#:89792 IS: /MWK /RC /MDF	MODIFICATION LEVEL	
		O. A. LAST LEVEL CHECKED	DQ
		LAST LEVEL MOD THIS TYPICAL	DQ
		LAST LEVEL BY DESIGNER	DR
		CHANGED FROM TYPICAL?	Y
		REV 02/01/08 M24SUPX0.7A	

UNION PACIFIC — QUALITY PRODUCTIVITY SAFETY — SIGNAL DESIGN

Date: 05-01-08
Des: RC
Chk: RC
AFE: 89792

UNION PACIFIC RAILROAD

PARK, ILLINOIS
8'X16' SLAVE 2 HOUSE
GENEVA SUBDIVISION

Office of Sr AVP Engineering - Signal/TCO Omaha, Nebraska

Sh.: 7
C.P. Y015
MP: 15.25
ID: GEN1525.7S

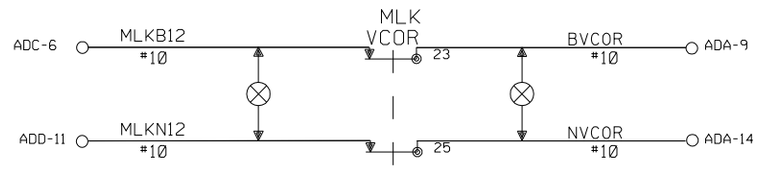

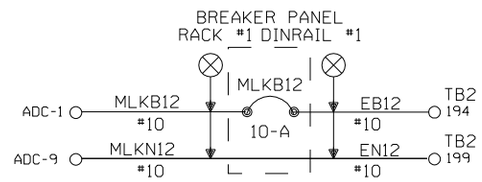

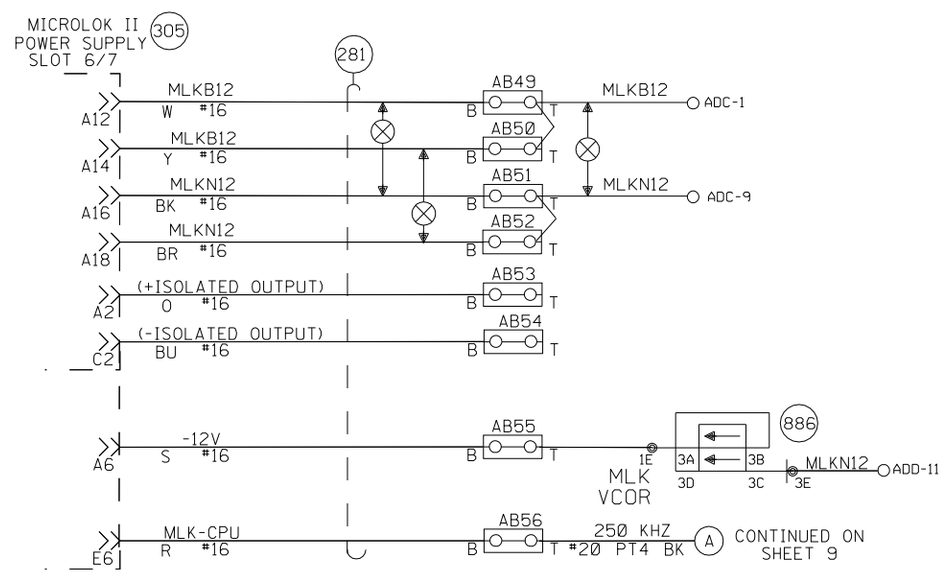

= IN

= OUT

NEW SHEET

				Designed: 03/01/09 CHICAGO CREATE PROJECT B2-PHASE 2 Rec#: WO#: 89793 IS: /MWK / /RC /MDF	Designed: 05/01/08 CHICAGO CREATE PROJECT B2-PHASE 1 Rec#: WO#: 84792 IS: /MWK / /RC /MDF	MODIFICATION LEVEL Q.A. LAST LEVEL CHECKED DQ LAST LEVEL MOD THIS TYPICAL DQ LAST LEVEL BY DESIGNER DR CHANGED FROM TYPICAL? N REV 02/01/08 M24SUPX0.8	UNION PACIFIC QUALITY PRODUCTIVITY SAFETY SIGNAL DESIGN	Date: 05-01-08 Des: RC Chk: RC AFE: 89792	UNION PACIFIC RAILROAD PARK, ILLINOIS 8'X16' SLAVE 2 HOUSE GENEVA SUBDIVISION Office of Sr AVP Engineering - Signal/TCO Omaha, Nebraska	Sh.: 8 C.P. Y015 MP: 15.25 ID: GEN1525.8S

WIRE CONNECTIONS FROM CONVERTER TO CONVERTER

MASTER	SLAVE
TD+, TERMINAL H--->	RD+, TERMINAL L
TD-, TERMINAL G--->	RD-, TERMINAL K
RD+, TERMINAL L <---	TD-, TERMINAL H
RD-, TERMINAL K <---	TD-, TERMINAL G

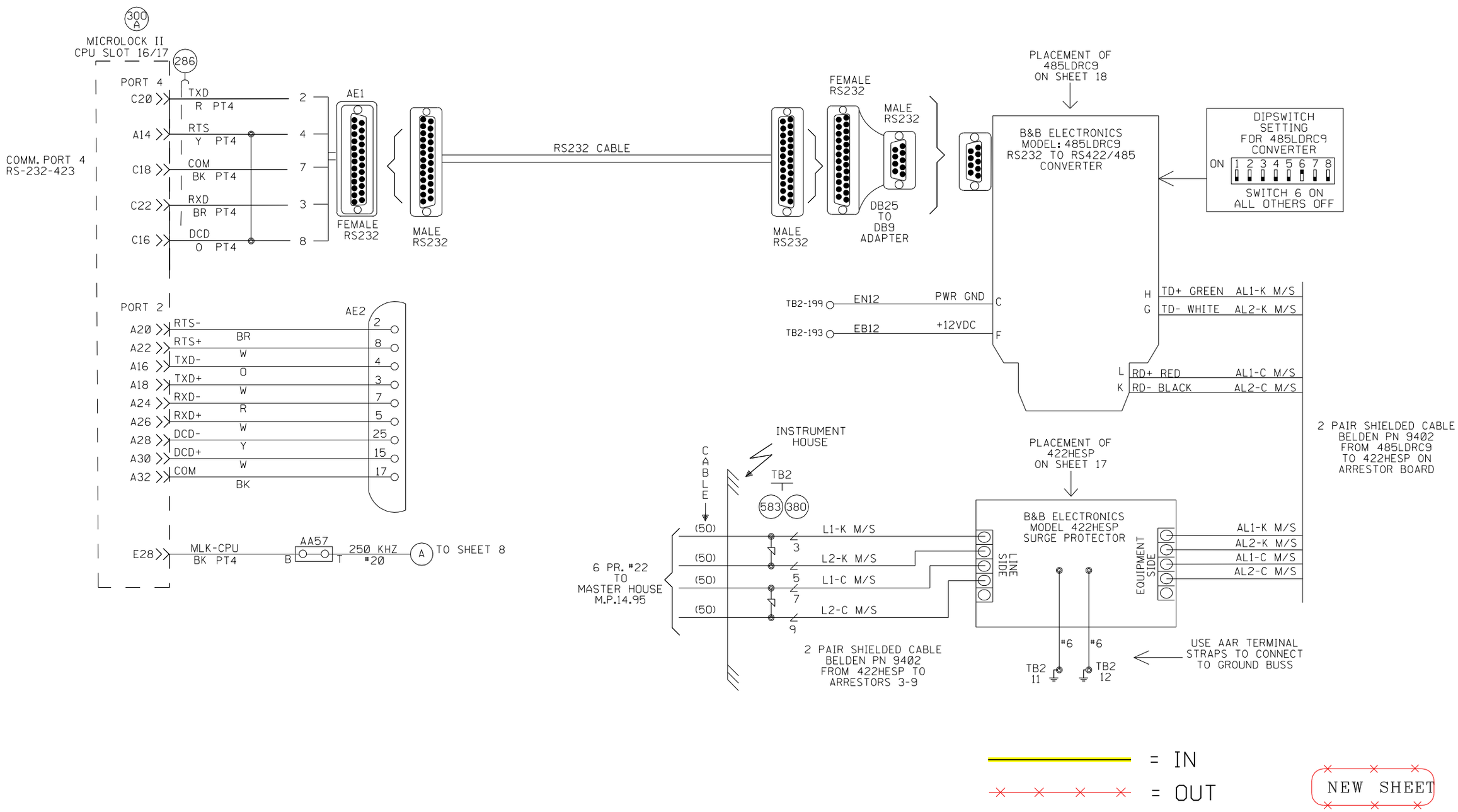

Designed: 03/01/09 CHICAGO CREATE PROJECT B2-PHASE 2 Rec#: IS: WO#:89793 /MWK /RC /MDF	Designed: 05/01/08 CHICAGO CREATE PROJECT B2-PHASE 1 Rec#: IS: WO#:84792 /MWK /RC /MDF	MODIFICATION LEVEL		UNION PACIFIC QUALITY PRODUCTIVITY SAFETY SIGNAL DESIGN	Date: 05-01-08	UNION PACIFIC RAILROAD	Sh.: 9
		Q.A. LAST LEVEL CHECKED	DQ		Des: RC	PARK, ILLINOIS	C.P. Y015
		LAST LEVEL MOD THIS TYPICAL	DQ		Chk: RC	8'X16' SLAVE 2 HOUSE	MP: 15.25
		LAST LEVEL BY DESIGNER	DR		AFE: 89792	GENEVA SUBDIVISION	ID: GEN1525.9S
		CHANGED FROM TYPICAL? REV 02/01/08 M24SUPX0.12	Y			Office of Sr AVP Engineering - Signal/TCO Omaha, Nebraska	

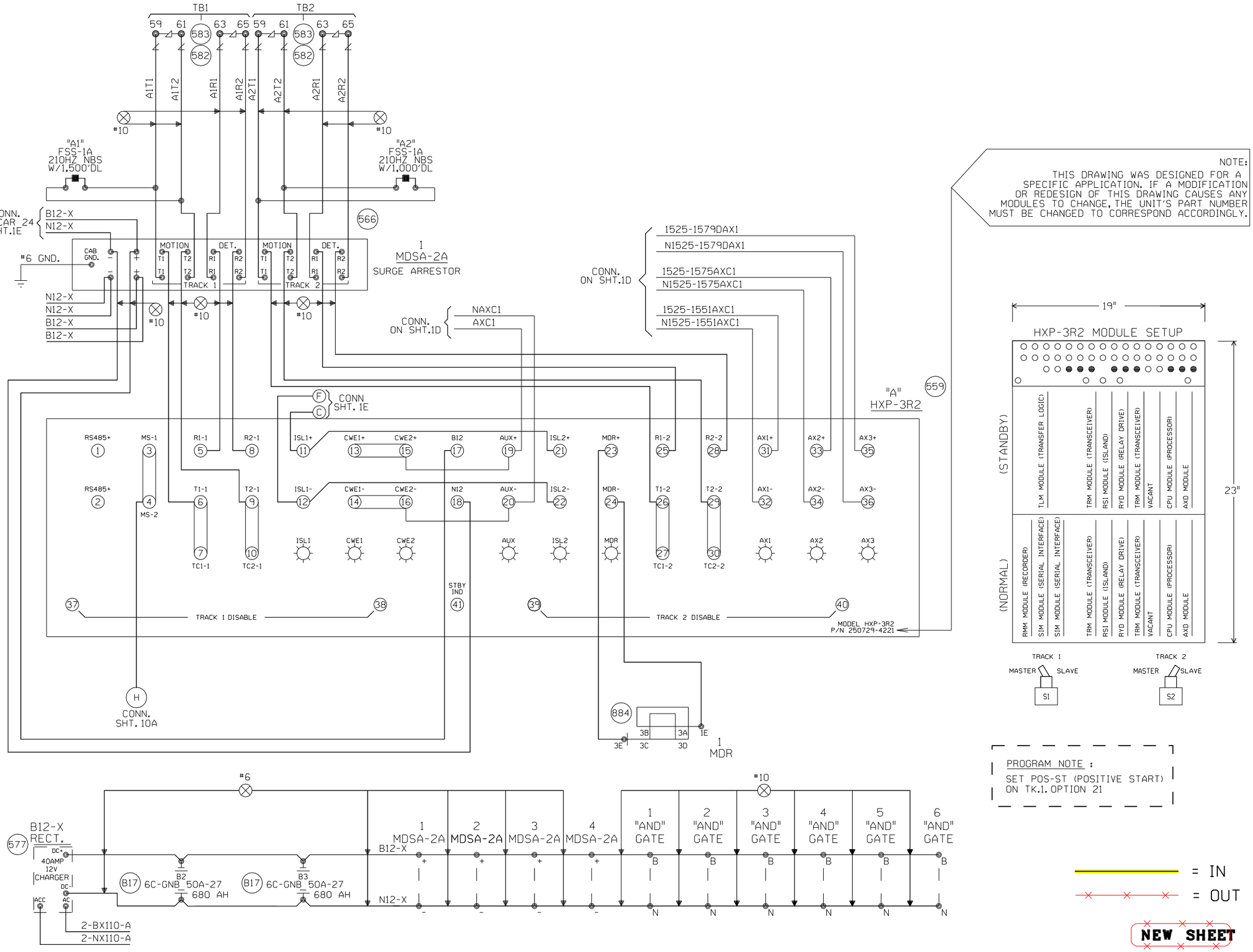

Designed: 03/01/09 CHICAGO CREATE PROJECT B2-PHASE 2 Rec#: IS: WO#:89793 /MWK / /RC /MDF	Designed: 05/01/08 CHICAGO CREATE PROJECT B2-PHASE 1 Rec#: IS: WO#:89792 /MWK / /RC /MDF	MODIFICATION LEVEL	
		Q.A. LAST LEVEL CHK'D.	DD
		LAST LEVEL MOD. THIS TYP.	DB
		LAST LEVEL BY DESIGNER.	DR
		CHANGED FROM TYP.? Y/N	Y

UNION PACIFIC — QUALITY PRODUCTIVITY SAFETY — SIGNAL DESIGN

Date:	05-01-08
Des:	RC
Chk:	RC
AFE:	89792

UNION PACIFIC RAILROAD
PARK, ILLINOIS
POPLAR STREET
GENEVA SUBDIVISION
Office of Sr AVP Engineering - Signal/TCO Omaha, Nebraska

Sh.:	10
DOT	174020S
MP:	15.25
ID:	GEN1525.10X

(REV. 01.02.21) (HX32TKUG.4)

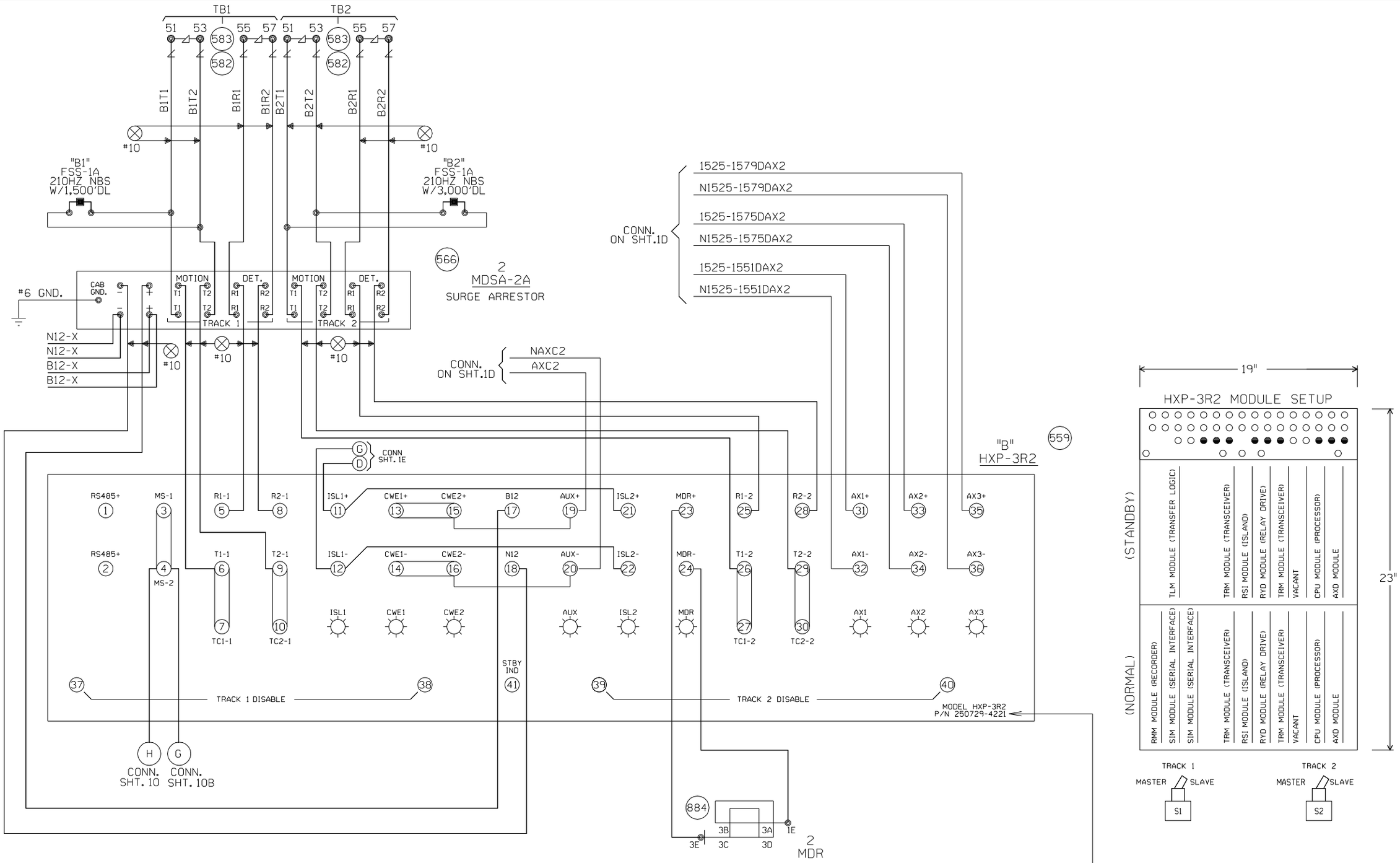

PROGRAM NOTE :

SET PJ-DET ON "AX1" TK. 2 = 65 SEC.

NOTE:
THIS DRAWING WAS DESIGNED FOR A SPECIFIC APPLICATION. IF A MODIFICATION OR REDESIGN OF THIS DRAWING CAUSES ANY MODULES TO CHANGE, THE UNIT'S PART NUMBER MUST BE CHANGED TO CORRESPOND ACCORDINGLY.

= IN

= OUT

NEW SHEET

Designed: 03/01/09 CHICAGO CREATE PROJECT B2-PHASE 2 Rec#: WO#:89793 IS: /MWK / /RC /MDF	Designed: 05/01/08 CHICAGO CREATE PROJECT B2-PHASE 1 Rec#: WO#:89792 IS: /MWK / /RC /MDF	MODIFICATION LEVEL	
		Q.A. LAST LEVEL CHK'D.	DD
		LAST LEVEL MOD. THIS TYP.	DB
		LAST LEVEL BY DESIGNER.	DR
		CHANGED FROM TYP.? Y/N	Y

UNION PACIFIC QUALITY PRODUCTIVITY SAFETY SIGNAL DESIGN

Date: 05-01-08
Des: RC
Chk: RC
AFE: 89792

UNION PACIFIC RAILROAD
PARK, ILLINOIS
POPLAR STREET
GENEVA SUBDIVISION
Office of Sr AVP Engineering - Signal/TCO Omaha, Nebraska

Sh.: 10A
DOT 174020S
MP: 15.25
ID: GEN1525.10AX

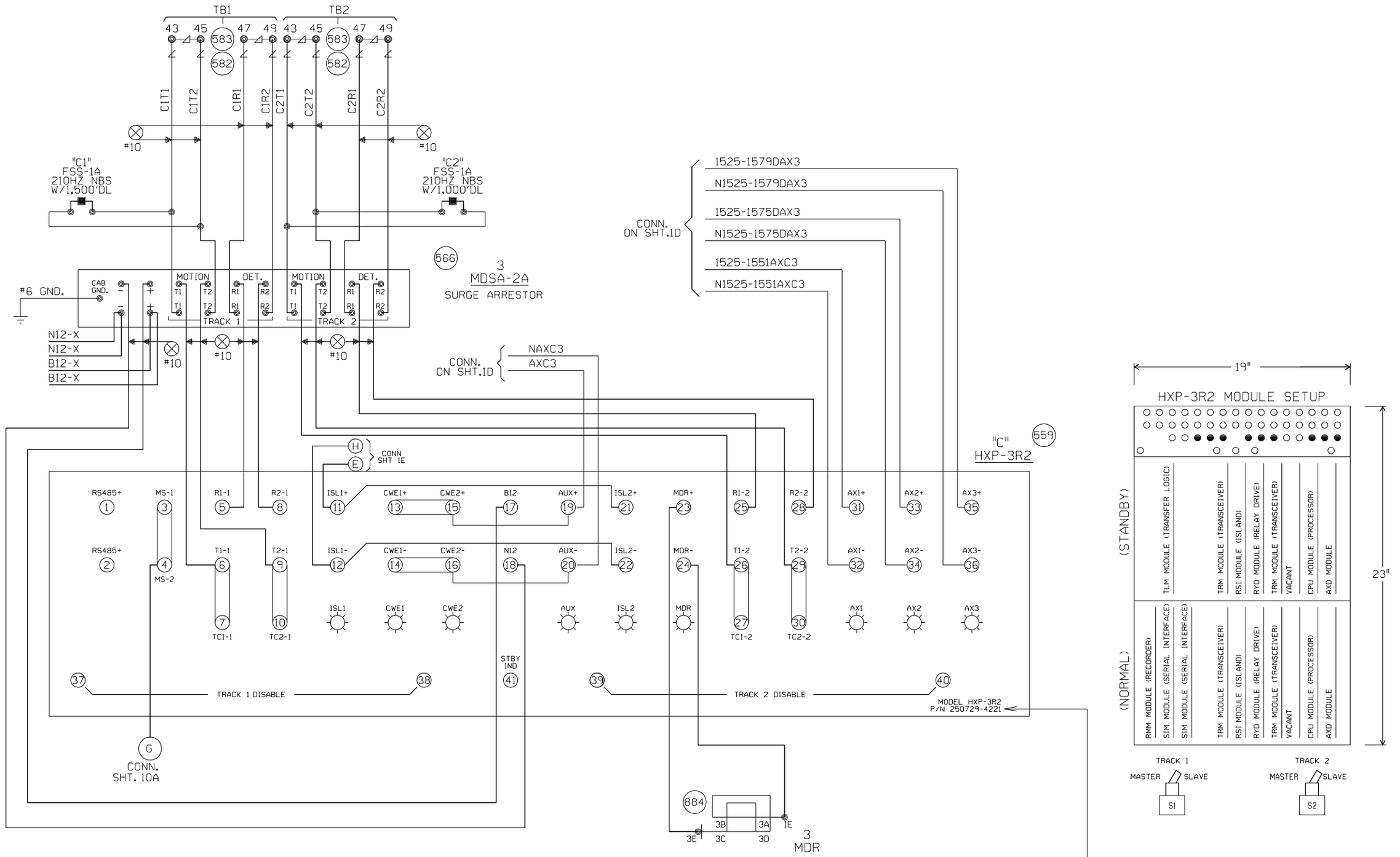

PROGRAM NOTE :
SET POS-ST (POSITIVE START) ON TK.2. OPTION 21

NOTE:
THIS DRAWING WAS DESIGNED FOR A SPECIFIC APPLICATION. IF A MODIFICATION OR REDESIGN OF THIS DRAWING CAUSES ANY MODULES TO CHANGE, THE UNIT'S PART NUMBER MUST BE CHANGED TO CORRESPOND ACCORDINGLY.

= IN
= OUT

NEW SHEET

Designed: 03/01/09 CHICAGO CREATE PROJECT B2-PHASE 2 Rec#: WO#:89793 IS: /MWK / /RC /MDF	Designed: 05/01/08 CHICAGO CREATE PROJECT B2-PHASE 1 Rec#: WO#:89792 IS: /MWK / /RC /MDF	MODIFICATION LEVEL	
		Q.A. LAST LEVEL CHK'D.	DD
		LAST LEVEL MOD. THIS TYP.	DB
		LAST LEVEL BY DESIGNER.	DR
		CHANGED FROM TYP.? Y/N	Y

UNION PACIFIC QUALITY PRODUCTIVITY SAFETY SIGNAL DESIGN

Date: 05-01-08
Des: RC
Chk: RC
AFE: 89792

UNION PACIFIC RAILROAD
PARK, ILLINOIS
POPLAR STREET
GENEVA SUBDIVISION
Office of Sr AVP Engineering - Signal/TCO Omaha, Nebraska

Sh.: 10B
DOT 174020S
MP: 15.25
ID: GENI525.10BX

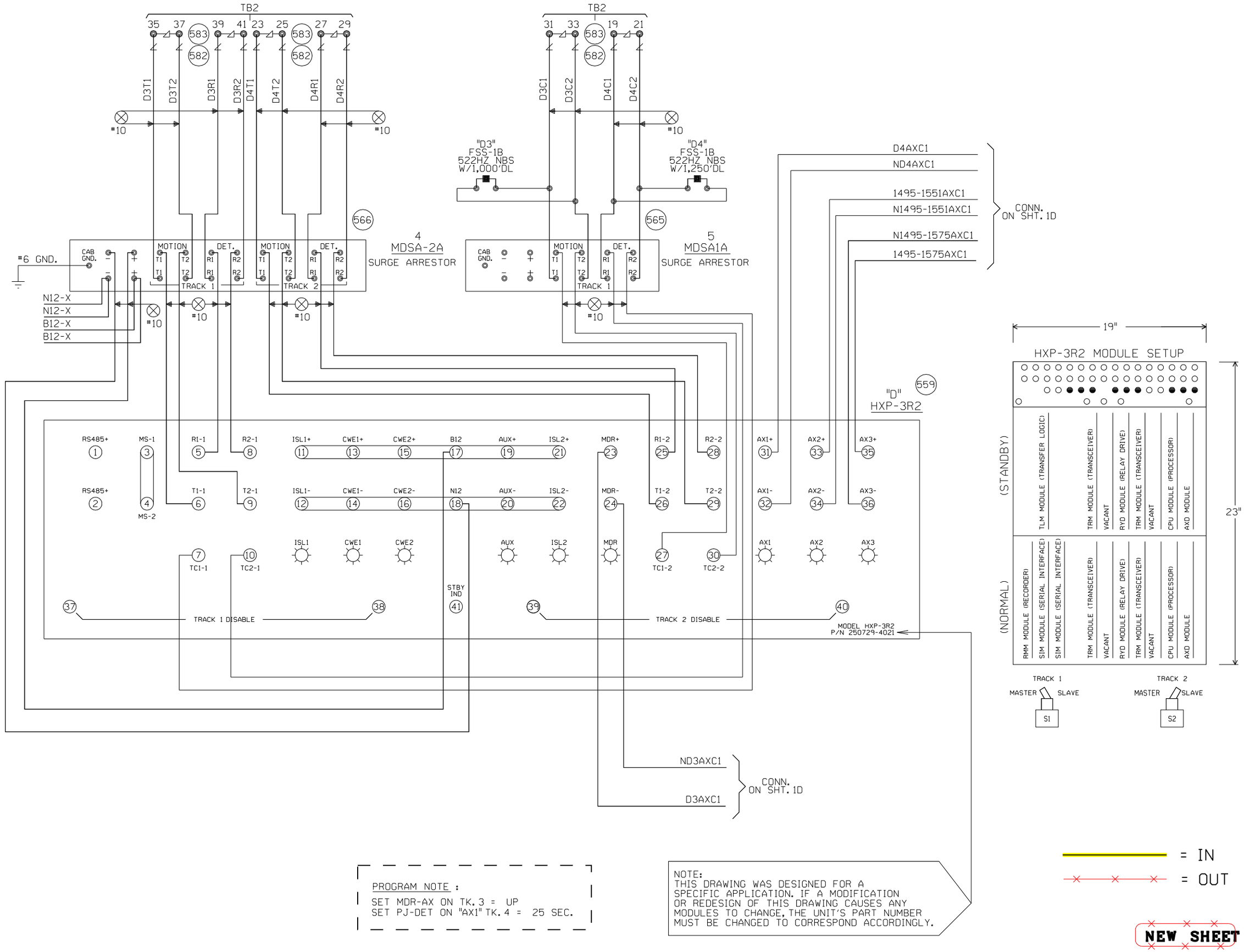

PROGRAM NOTE :

SET MDR-AX ON TK. 3 = UP
SET PJ-DET ON "AX1" TK. 4 = 25 SEC.

NOTE:
THIS DRAWING WAS DESIGNED FOR A SPECIFIC APPLICATION. IF A MODIFICATION OR REDESIGN OF THIS DRAWING CAUSES ANY MODULES TO CHANGE, THE UNIT'S PART NUMBER MUST BE CHANGED TO CORRESPOND ACCORDINGLY.

Designed: 03/01/09 CHICAGO CREATE PROJECT B2-PHASE 2 Rec#: WO#:89793 IS: /MWK / /RC /MDF	Designed: 05/01/08 CHICAGO CREATE PROJECT B2-PHASE 1 Rec#: WO#:89792 IS: /MWK / /RC /MDF	MODIFICATION LEVEL	
		Q.A. LAST LEVEL CHK'D.	DD
		LAST LEVEL MOD. THIS TYP.	DB
		LAST LEVEL BY DESIGNER.	DR
		CHANGED FROM TYP.? Y/N	Y

UNION PACIFIC
QUALITY PRODUCTIVITY SAFETY
SIGNAL DESIGN

Date: 05-01-08
Des: RC
Chk: RC
AFE: 89792

UNION PACIFIC RAILROAD
PARK, ILLINOIS
POPLAR STREET
GENEVA SUBDIVISION
Office of Sr AVP Engineering - Signal/TCO Omaha, Nebraska

Sh.: 10C
DOT 174020S
MP: 15.25
ID: GEN1525.10CX

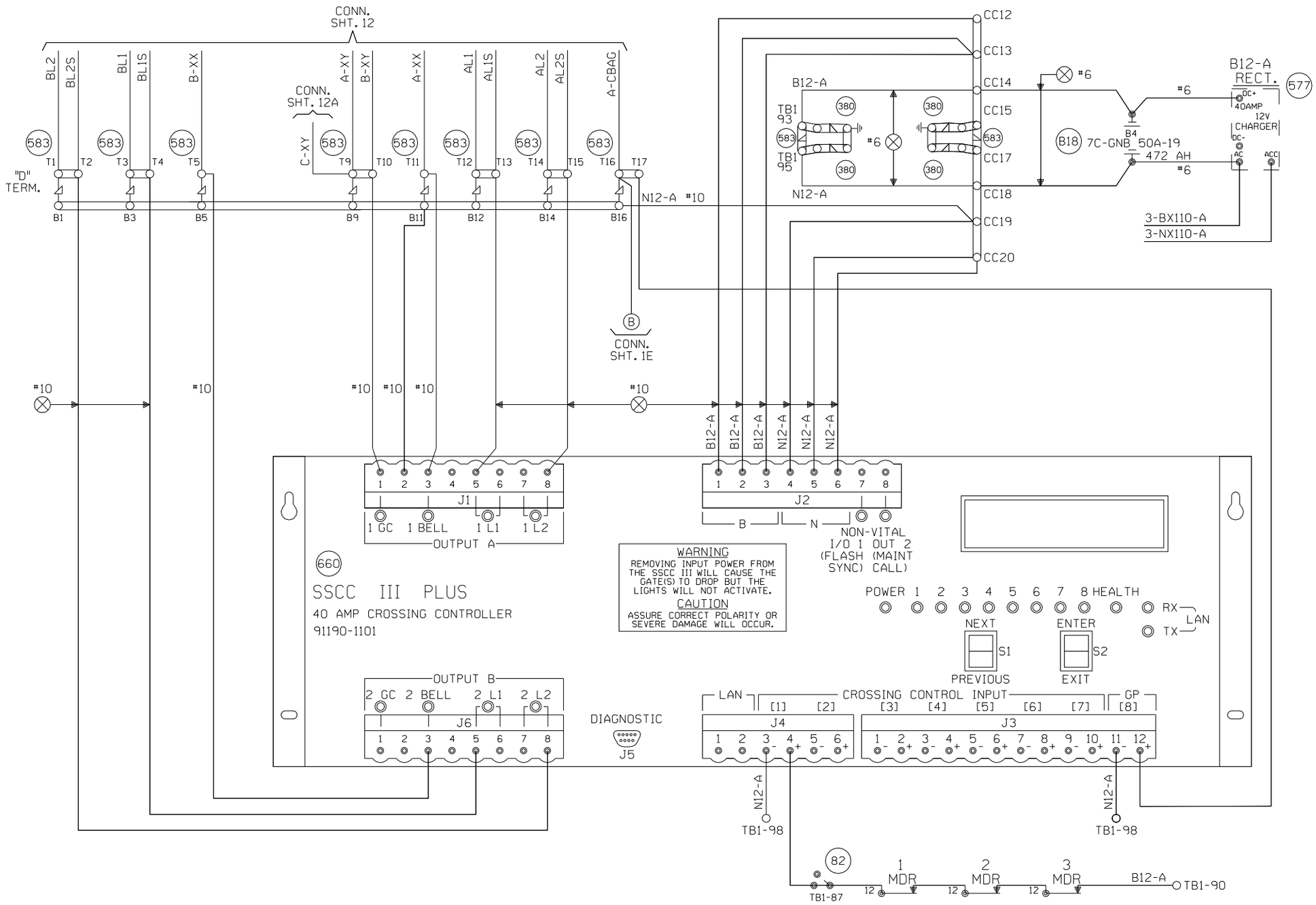

IMPORTANT

THE PROGRAM MCF AND ID LISTED BELOW MUST BE ENTERED IN THE PROGRAM SETUP ROUTINE FOR THIS SOLID STATE CROSSING CONTROLLER TO FUNCTION PROPERLY.

PROGRAM MCF: BASICPLS
PROGRAM ID: 087

EXTERNAL CROSSING CONTROLLER PROGRAM NOTE:

#1) PROGRAM INPUT 2-7 TO DISABLED

= IN
= OUT

NEW SHEET

Designed: 03/01/09 CHICAGO CREATE PROJECT B2-PHASE 2 Rec#: WO#:89793 IS: / /RC /MWK /MDF	Designed: 05/01/08 CHICAGO CREATE PROJECT B2-PHASE 1 Rec#: WO#:89792 IS: / /RC /MWK /MDF	MODIFICATION LEVEL	
		Q.A. LAST LEVEL CHK'D.	DH
		LAST LEVEL MOD. THIS TYP.	DH
		LAST LEVEL BY DESIGNER.	DR
		CHANGED FROM TYP.? Y/N	Y

UNION PACIFIC QUALITY PRODUCTIVITY SAFETY SIGNAL DESIGN

Date: 05-01-08
Des: RC
Chk: RC
AFE: 89792

UNION PACIFIC RAILROAD
PARK, ILLINOIS
POPLAR STREET
GENEVA SUBDIVISION
Office of Sr AVP Engineering - Signal/TCO Omaha, Nebraska

Sh.: 11
DOT 174020S
MP: 15.25
ID: GEN1525.11X

(REV. 01.01.04) (SSCCGF.5)

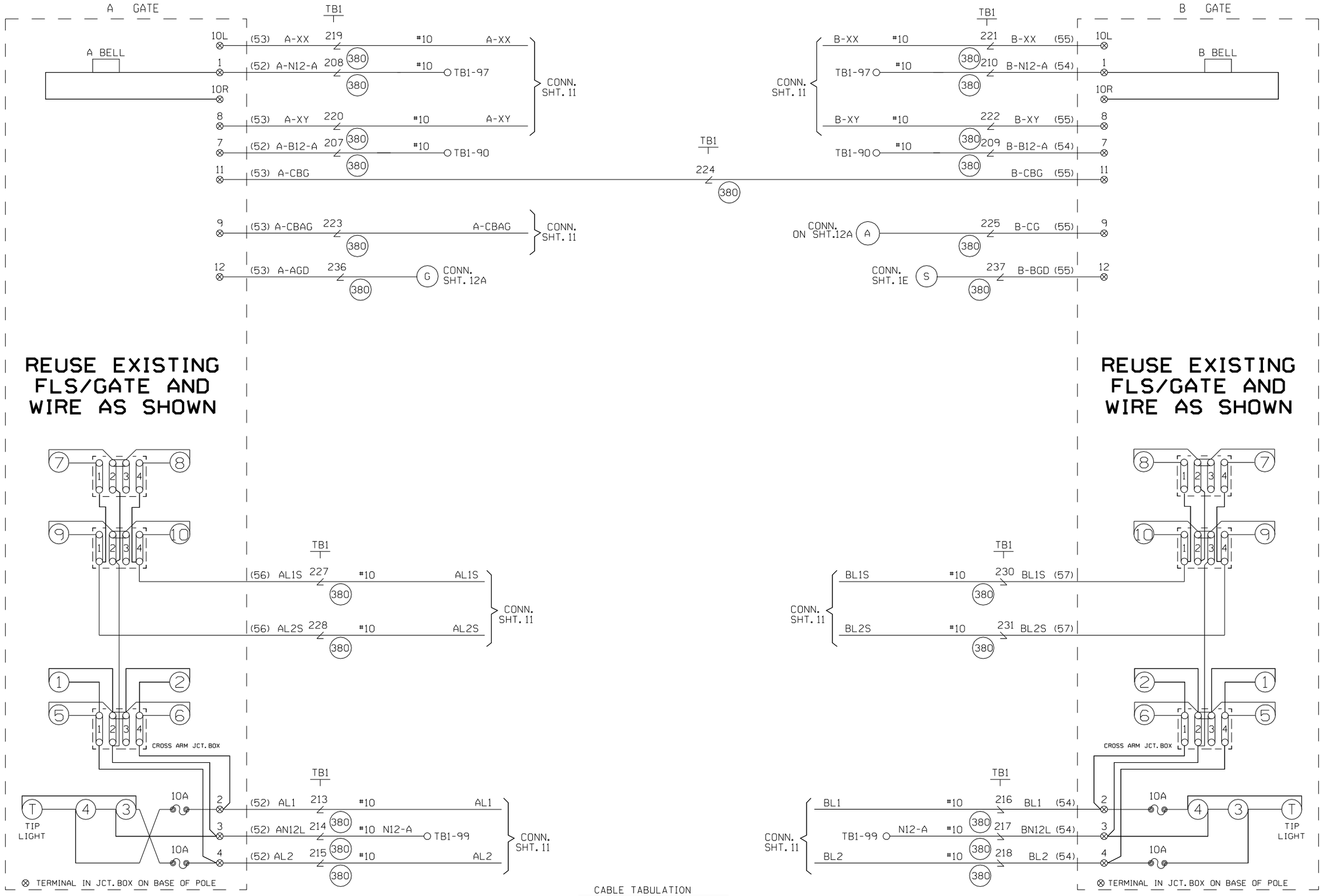

CABLE TABULATION

CABLE NO. 52 5C. NO.6 U.G.B.T.
CABLE NO. 53 7C. NO.14 U.G.B.T.
CABLE NO. 54 5C. NO.6 U.G.B.T.
CABLE NO. 55 7C. NO.14 U.G.B.T.
CABLE NO. 56 2C. NO.6 U.G.B.T.
CABLE NO. 57 2C. NO.6 U.G.B.T.
CABLE NO. 58 5C. NO.6 U.G.B.T.
CABLE NO. 59 7C. NO.14 U.G.B.T.

= IN

= OUT

NEW SHEET

Designed: 03/01/09 CHICAGO CREATE PROJECT B2-PHASE 2 Rec#: IS: WO#:89793 /MWK /RC /MDF	Designed: 05/01/08 CHICAGO CREATE PROJECT B2-PHASE I Rec#: IS: WO#:89792 /MWK /RC /MDF	MODIFICATION LEVEL	
		O.A. LAST LEVEL CHECKED	DQ
		LAST LEVEL MOD THIS TYPICAL	DQ
		LAST LEVEL BY DESIGNER	DR
		CHANGED FROM TYPICAL? REV 02.01.08 4K GFCTYP.5	Y

UNION PACIFIC — QUALITY PRODUCTIVITY SAFETY — SIGNAL DESIGN

Date: 05-01-08
Des: RC
Chk: RC
AFE: 89792

UNION PACIFIC RAILROAD

PARK, ILLINOIS
POPLAR STREET
GENEVA SUBDIVISION

Office of Sr AVP Engineering - Signal/TCO Omaha, Nebraska

Sh.: 12
DOT 174020S
MP: 15.25
ID: GEN1525.12X

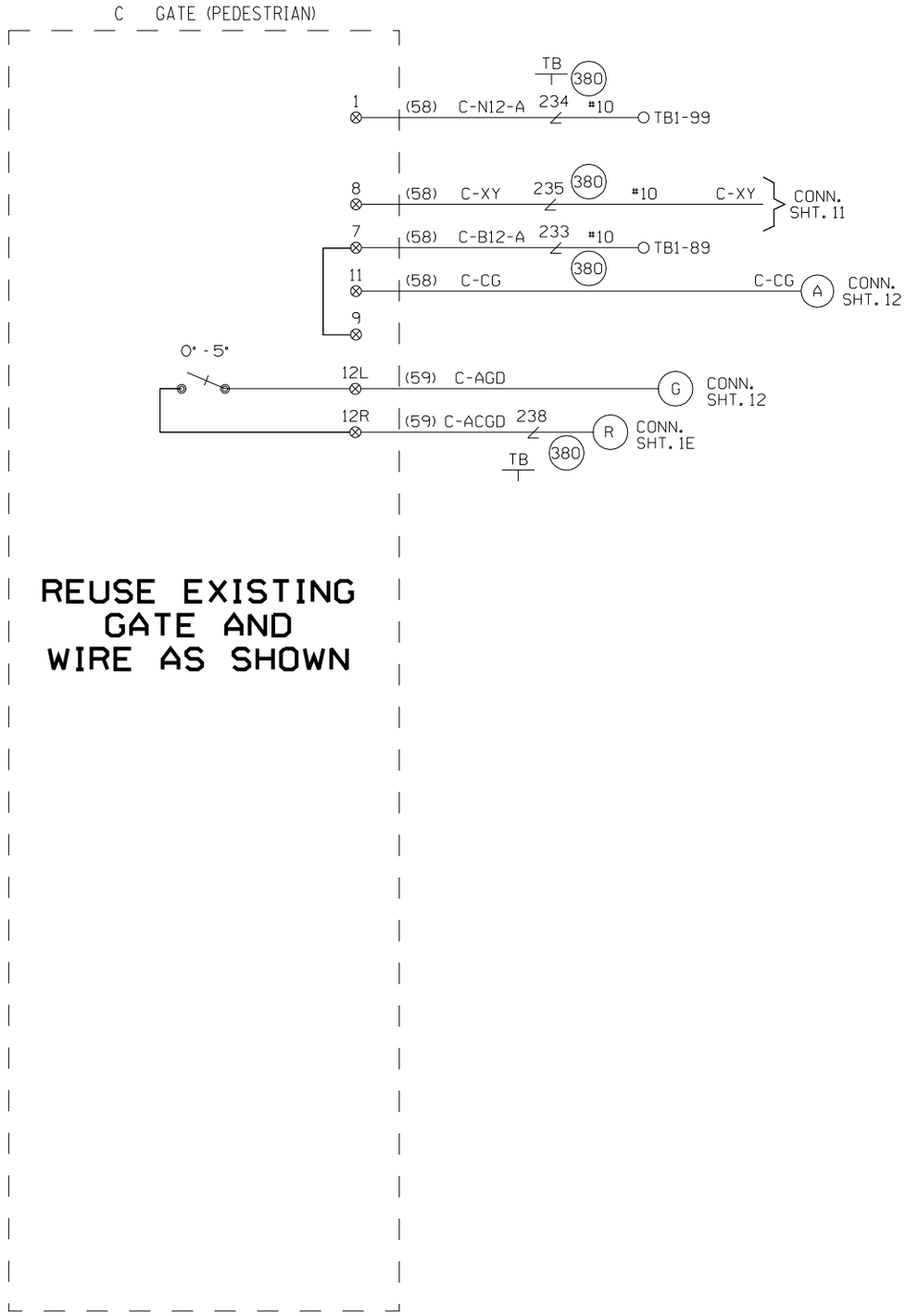

= IN

= OUT

NEW SHEET

				Designed: 03/01/09 CHICAGO CREATE PROJECT B2-PHASE 2 Rec#: WO#:89793 IS: /MWK / /RC /MDF	Designed: 05/01/08 CHICAGO CREATE PROJECT B2-PHASE 1 Rec#: WO#:89792 IS: /MWK / /RC /MDF	MODIFICATION LEVEL Q.A. LAST LEVEL CHECKED DQ LAST LEVEL MOD THIS TYPICAL DQ LAST LEVEL BY DESIGNER DR CHANGED FROM TYPICAL? Y REV 02.01.08 4K 4GFTYP.6	UNION PACIFIC QUALITY PRODUCTIVITY SAFETY SIGNAL DESIGN	Date: 05-01-08 Des: RC Chk: RC AFE: 89792	UNION PACIFIC RAILROAD PARK, ILLINOIS POPLAR STREET GENEVA SUBDIVISION Office of Sr AVP Engineering - Signal/TCO Omaha, Nebraska	Sh.: 12A DOT 174020S MP: 15.25 ID: GEN1525.12AX

WCH 3597

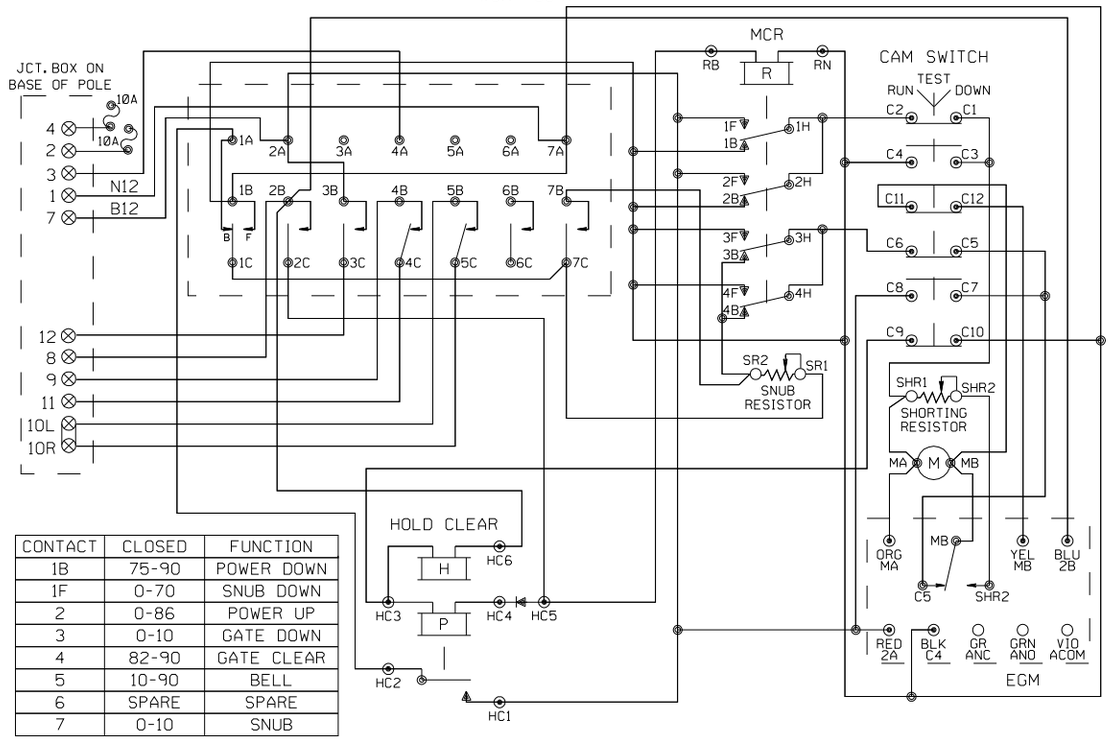

CONTACT	CLOSED	FUNCTION
1B	75-90	POWER DOWN
1F	0-70	SNUB DOWN
2	0-86	POWER UP
3	0-10	GATE DOWN
4	82-90	GATE CLEAR
5	10-90	BELL
6	SPARE	SPARE
7	0-10	SNUB

WCH 3597-RB

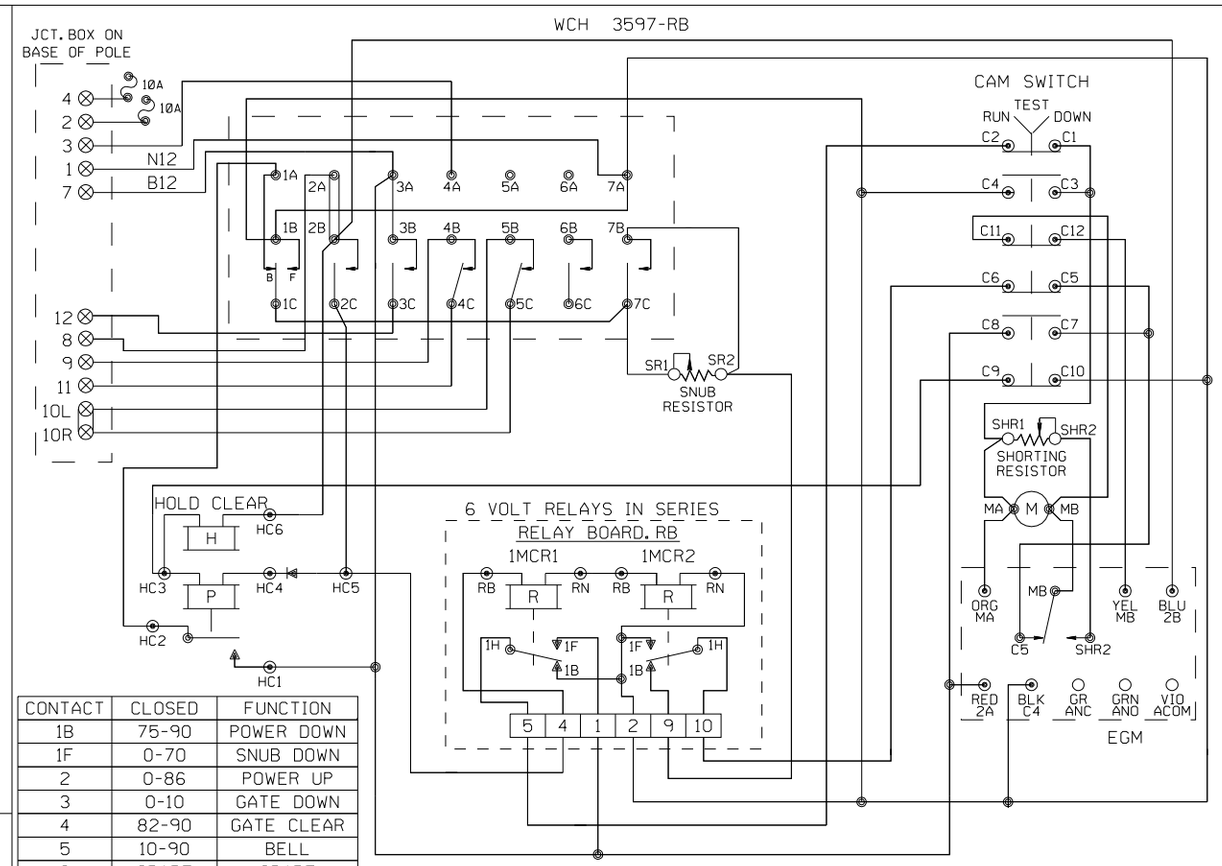

CONTACT	CLOSED	FUNCTION
1B	75-90	POWER DOWN
1F	0-70	SNUB DOWN
2	0-86	POWER UP
3	0-10	GATE DOWN
4	82-90	GATE CLEAR
5	10-90	BELL
6	SPARE	SPARE
7	0-10	SNUB

WCH 3593-E

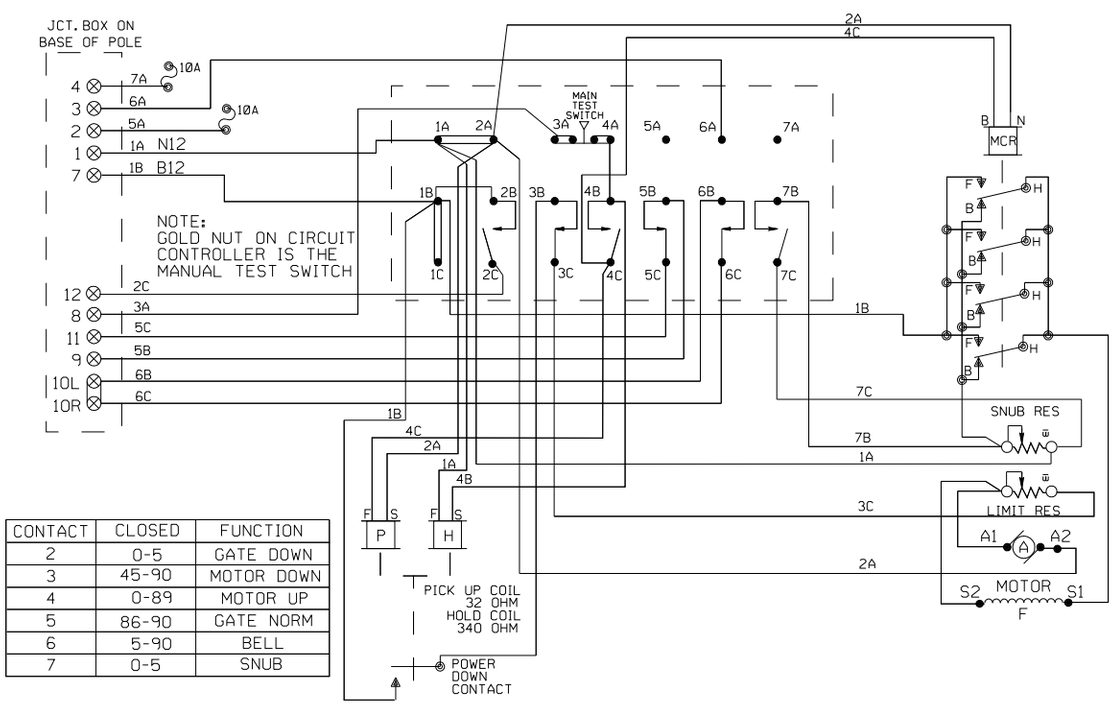

CONTACT	CLOSED	FUNCTION
2	0-5	GATE DOWN
3	45-90	MOTOR DOWN
4	0-89	MOTOR UP
5	86-90	GATE NORM
6	5-90	BELL
7	0-5	SNUB

WCH 3597-E

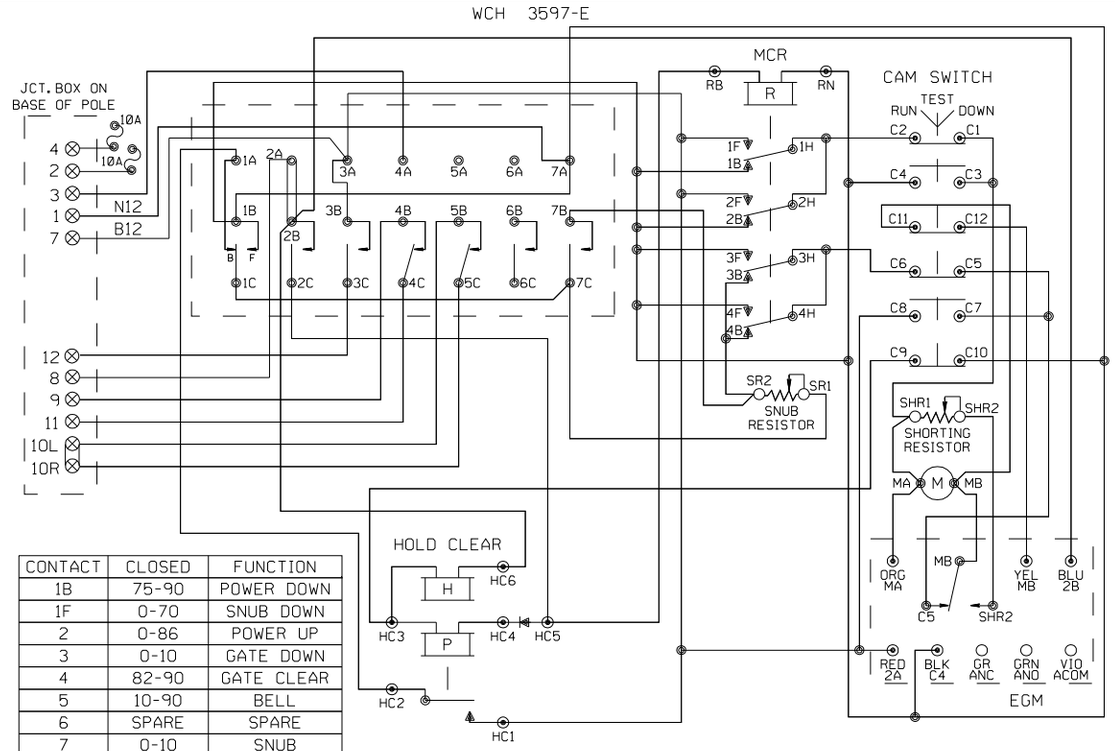

CONTACT	CLOSED	FUNCTION
1B	75-90	POWER DOWN
1F	0-70	SNUB DOWN
2	0-86	POWER UP
3	0-10	GATE DOWN
4	82-90	GATE CLEAR
5	10-90	BELL
6	SPARE	SPARE
7	0-10	SNUB

SHOW TYPE MECH. INSTALLED

ALL MECHANISMS SHOWN IN THE CLEAR POSITION

JCT. BOX ON BASE POLE

L R L R
1 7
2 8
3 9
4 10
5 11
6 12

= IN

= OUT

NEW SHEET

Designed: 03/01/09 CHICAGO CREATE PROJECT B2-PHASE 2 Rec#: IS: WO#:89793 MWK RC MDF	Designed: 05/01/08 CHICAGO CREATE PROJECT B2-PHASE 1 Rec#: IS: WO#:89792 MWK RC MDF	MODIFICATION LEVEL	
		O.A. LAST LEVEL CHECKED	DQ
		LAST LEVEL MOD THIS TYPICAL	DQ
		LAST LEVEL BY DESIGNER	DR
		CHANGED FROM TYPICAL?	N
		REV 02.01.08 4K GWIRING.DGN	

UNION PACIFIC — QUALITY PRODUCTIVITY SAFETY — SIGNAL DESIGN

Date: 05-01-08
Des: RC
Chk: RC
AFE: 89792

UNION PACIFIC RAILROAD

PARK, ILLINOIS
POPLAR STREET
GENEVA SUBDIVISION

Office of Sr AVP Engineering - Signal/TCO Omaha, Nebraska

Sh.: 13
DOT 174020S
MP: 15.25
ID: GEN1525.13X

PLAN VIEW
8'x16' HOUSE
-NO SCALE-

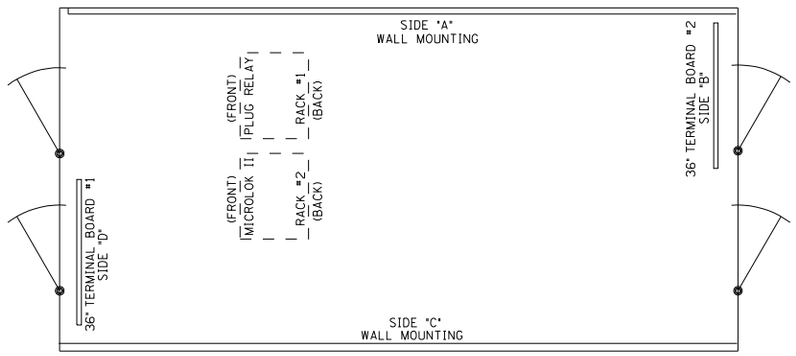

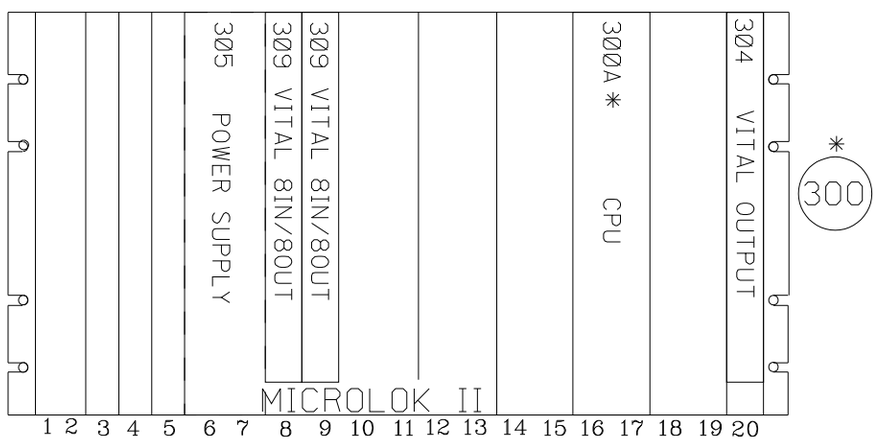

* TAB 300 CONSISTS OF CPU, CC, & MICROLOK CARDFILE

NOTE; ADD OR DELETE CARDS AS NEEDED

TYPICAL CONTACT CONFIGURATIONS FOR PLUG-IN RELAYS

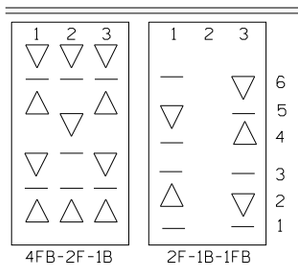

LEGEND

— = CONTACT HEEL

▽ = CONTACT FRONT

△ = CONTACT BACK

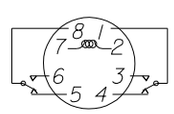

AMPERITE
I2DPJ-60C
REAR VIEW

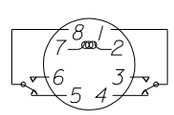

POTTTER & BRUMFIELD
REAR VIEW

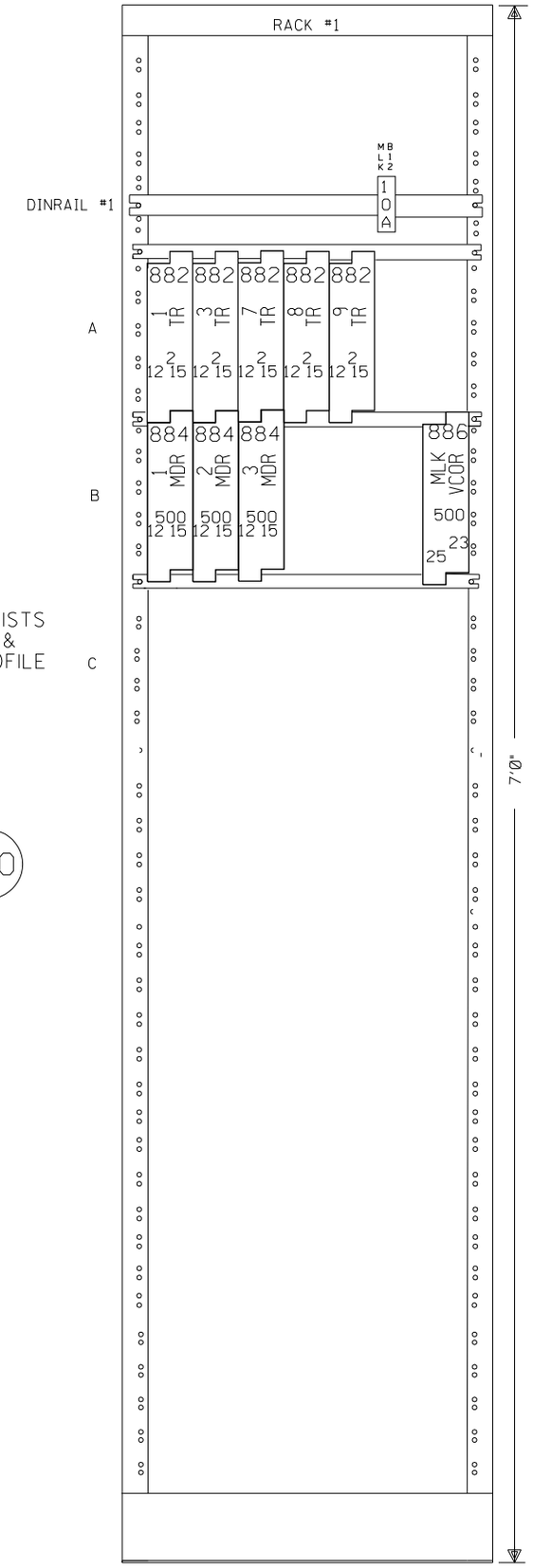

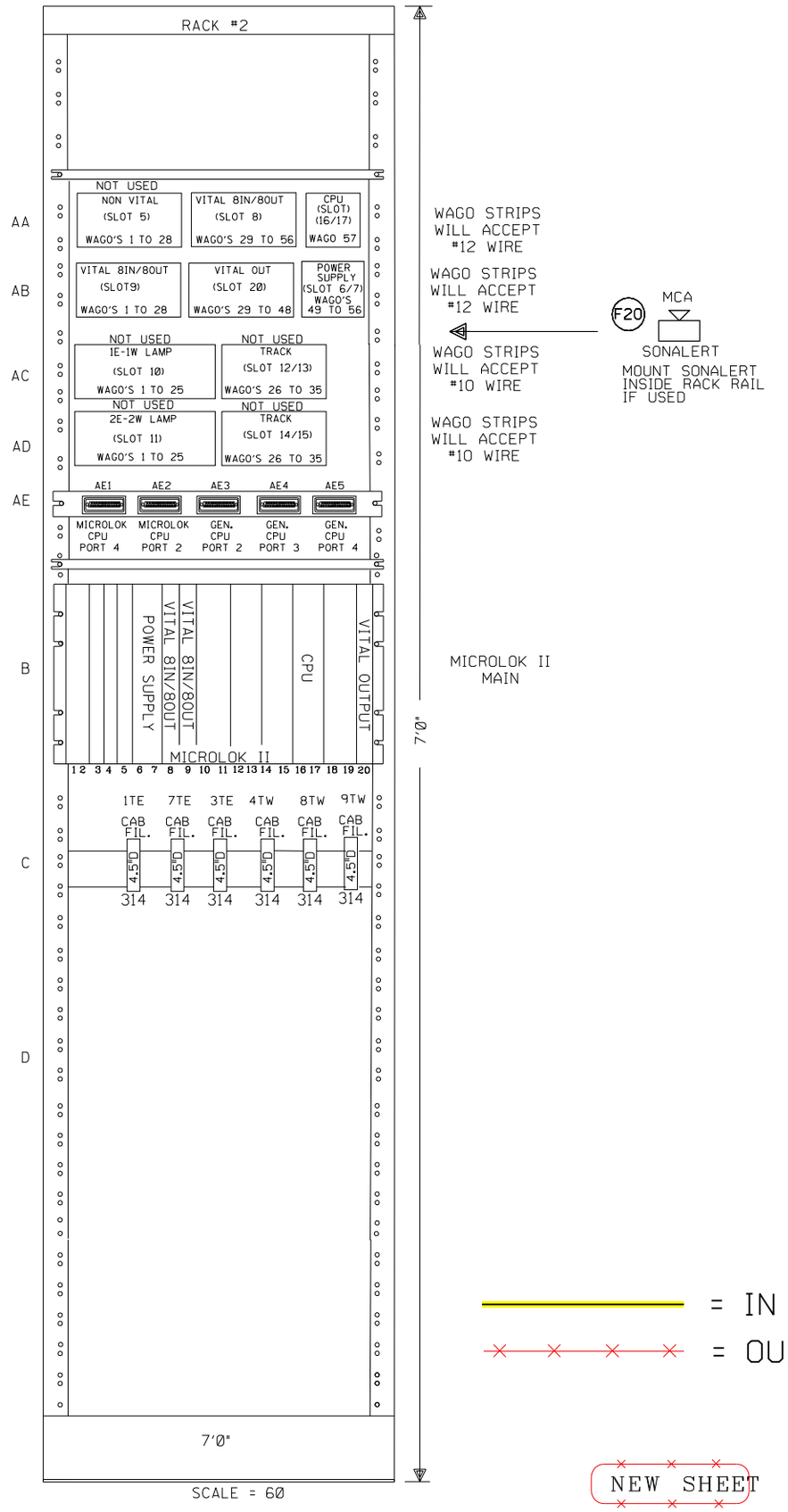

WAGO STRIPS WILL ACCEPT #12 WIRE

WAGO STRIPS WILL ACCEPT #12 WIRE

WAGO STRIPS WILL ACCEPT #10 WIRE

WAGO STRIPS WILL ACCEPT #10 WIRE

MICROLOK II MAIN

F20 MCA SONALERT

MOUNT SONALERT INSIDE RACK RAIL IF USED

= IN

= OUT

SCALE = 60

NEW SHEET

				Designed: 03/01/09 CHICAGO CREATE PROJECT B2-PHASE 2 Rec#: WO#:89793 IS: /MWK / /RC /MDF	Designed: 05/01/08 CHICAGO CREATE PROJECT B2-PHASE I Rec#: WO#:89792 IS: /MWK / /RC /MDF	MODIFICATION LEVEL		UNION PACIFIC QUALITY PRODUCTIVITY SAFETY SIGNAL DESIGN	Date: 05-01-08 Des: RC Chk: RC AFE: 89792	UNION PACIFIC RAILROAD PARK, ILLINOIS 8'X16' SLAVE 2 HOUSE GENEVA SUBDIVISION Office of Sr AVP Engineering - Signal/TCO Omaha, Nebraska	Sh.: 14 C.P. Y015 MP: 15.25 ID: GEN1525.14S
						O. A. LAST LEVEL CHECKED	DQ				
						LAST LEVEL MOD THIS TYPICAL	DQ				
						LAST LEVEL BY DESIGNER	DR				
						CHANGED FROM TYPICAL?	Y				
						REV 02/01/08 M24SUPX0.14					

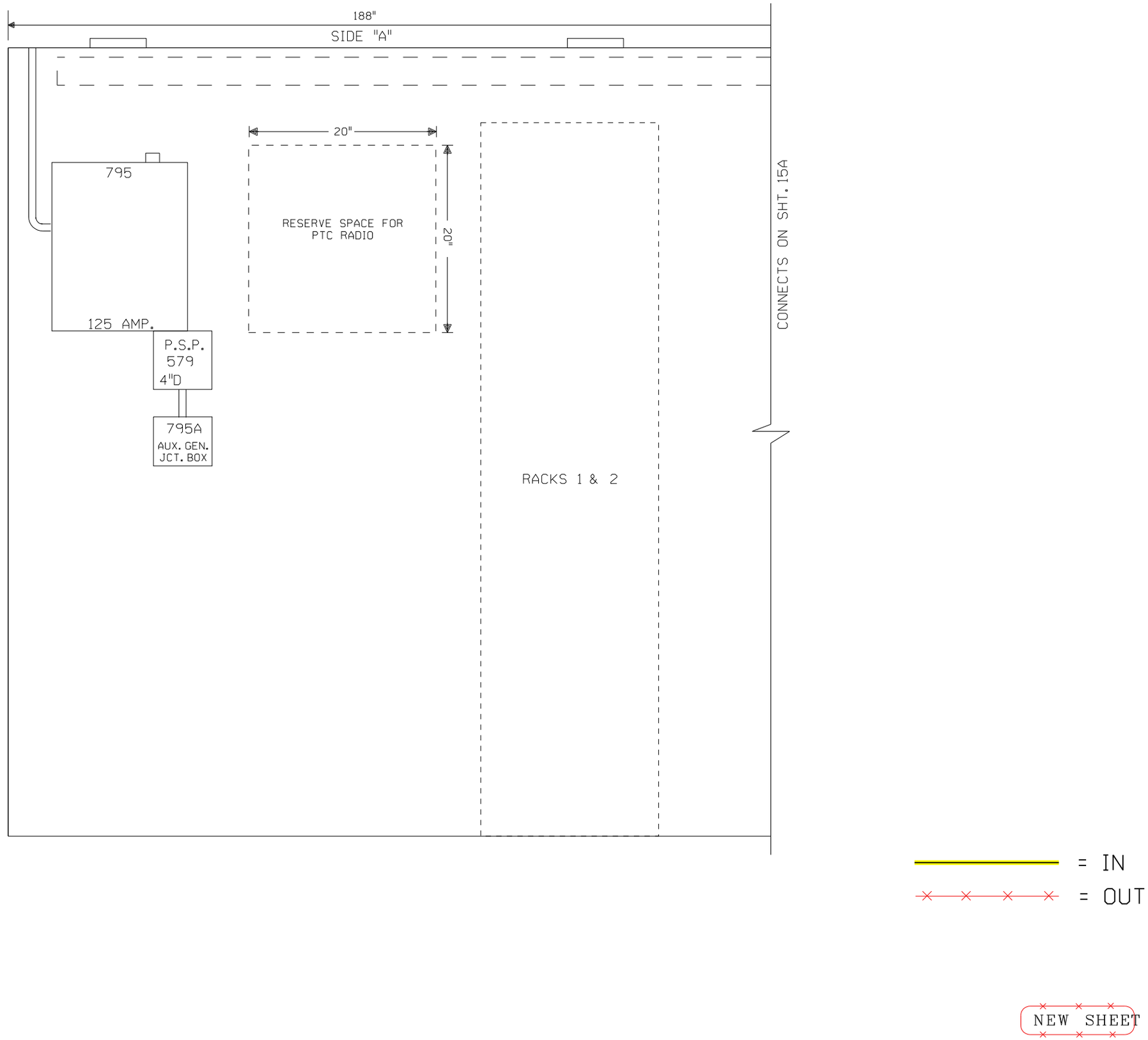

				Designed: 03/01/09 CHICAGO CREATE PROJECT B2-PHASE 2 Rec#: WO#:89793 IS: /MWK / /RC /MDF	Designed: 05/01/08 CHICAGO CREATE PROJECT B2-PHASE 1 Rec#: WO#:89792 IS: /MWK / /RC /MDF	MODIFICATION LEVEL Q.A. LAST LEVEL CHECKED DQ LAST LEVEL MOD THIS TYPICAL DQ LAST LEVEL BY DESIGNER DR CHANGED FROM TYPICAL? Y REV 02/01/08 M24SUPX0.15	UNION PACIFIC QUALITY PRODUCTIVITY SAFETY SIGNAL DESIGN	Date: 05-01-08 Des: RC Chk: RC AFE: 89792	UNION PACIFIC RAILROAD PARK, ILLINOIS POPLAR STREET GENEVA SUBDIVISION Office of Sr AVP Engineering - Signal/TCO Omaha, Nebraska	Sh.: 15 DOT 174020S MP: 15.25 ID: GEN1525.15X

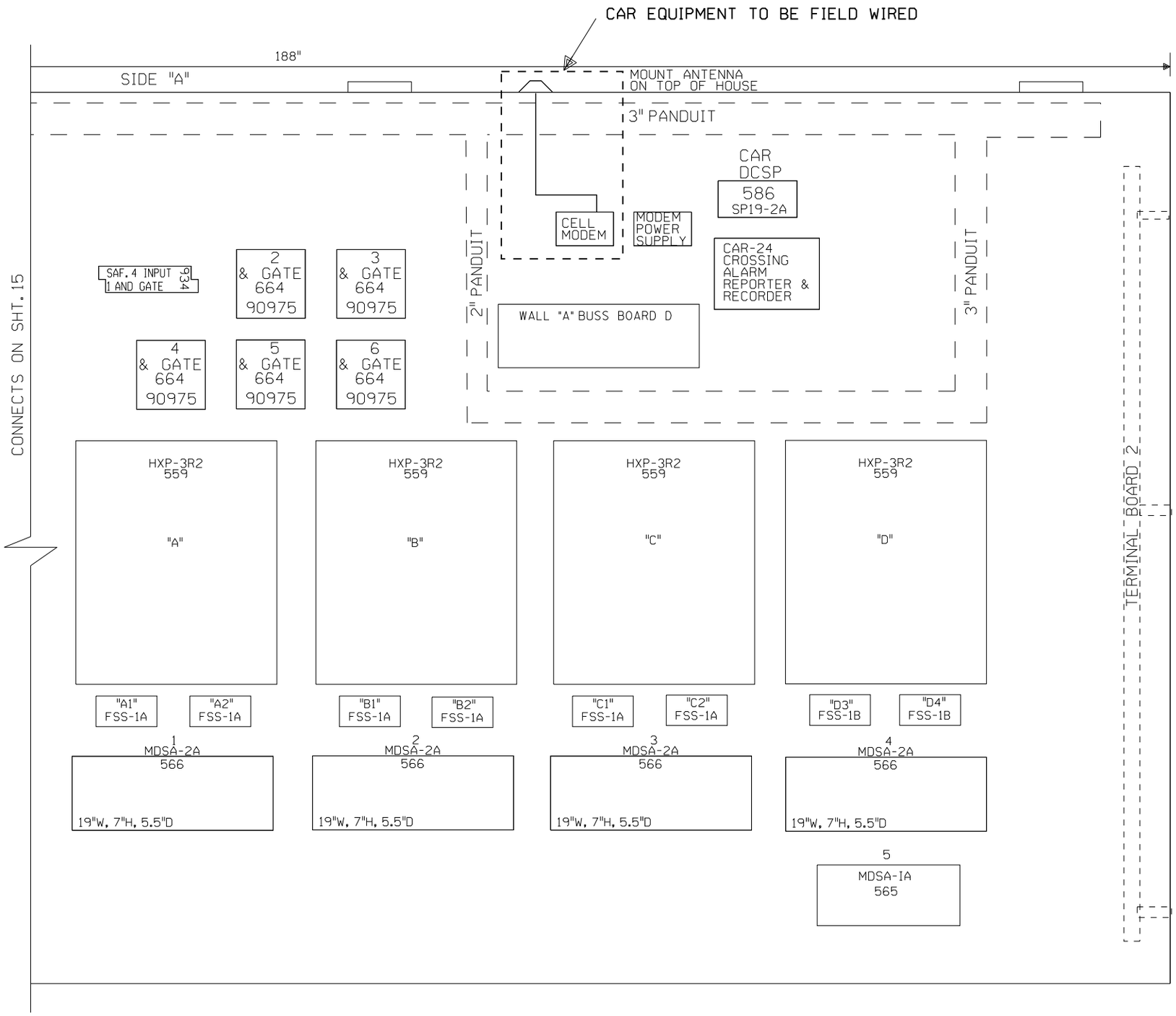

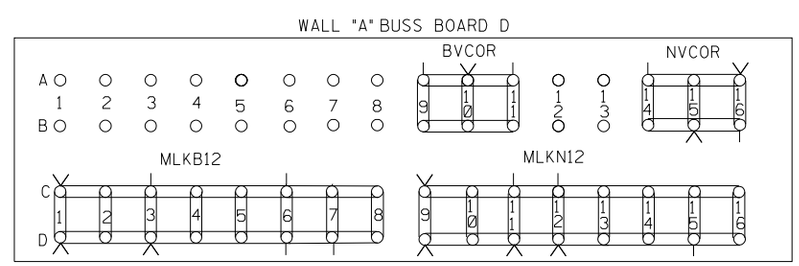

= IN

= OUT

NEW SHEET

				Designed: 03/01/09 CHICAGO CREATE PROJECT B2-PHASE 2 Rec'd IS: / WO#:89793 /MWK /RC /MDF	Designed: 05/01/08 CHICAGO CREATE PROJECT B2-PHASE 1 Rec'd IS: / WO#:89792 /MWK /RC /MDF	MODIFICATION LEVEL		UNION PACIFIC QUALITY PRODUCTIVITY SAFETY SIGNAL DESIGN	Date: 05-01-08	UNION PACIFIC RAILROAD	Sh.: 15A
						O.A. LAST LEVEL CHECKED	DQ		Des: RC	PARK, ILLINOIS POPLAR STREET GENEVA SUBDIVISION	DOT 174020S
						LAST LEVEL MOD THIS TYPICAL	DQ		Chk: RC		MP: 15.25
						LAST LEVEL BY DESIGNER	DR		AFE: 89792	Office of Sr AVP Engineering - Signal/TCO Omaha, Nebraska	ID: GEN1525.15AX
						CHANGED FROM TYPICAL?	Y				
						REV 02/01/08 M24SUPX0.15					

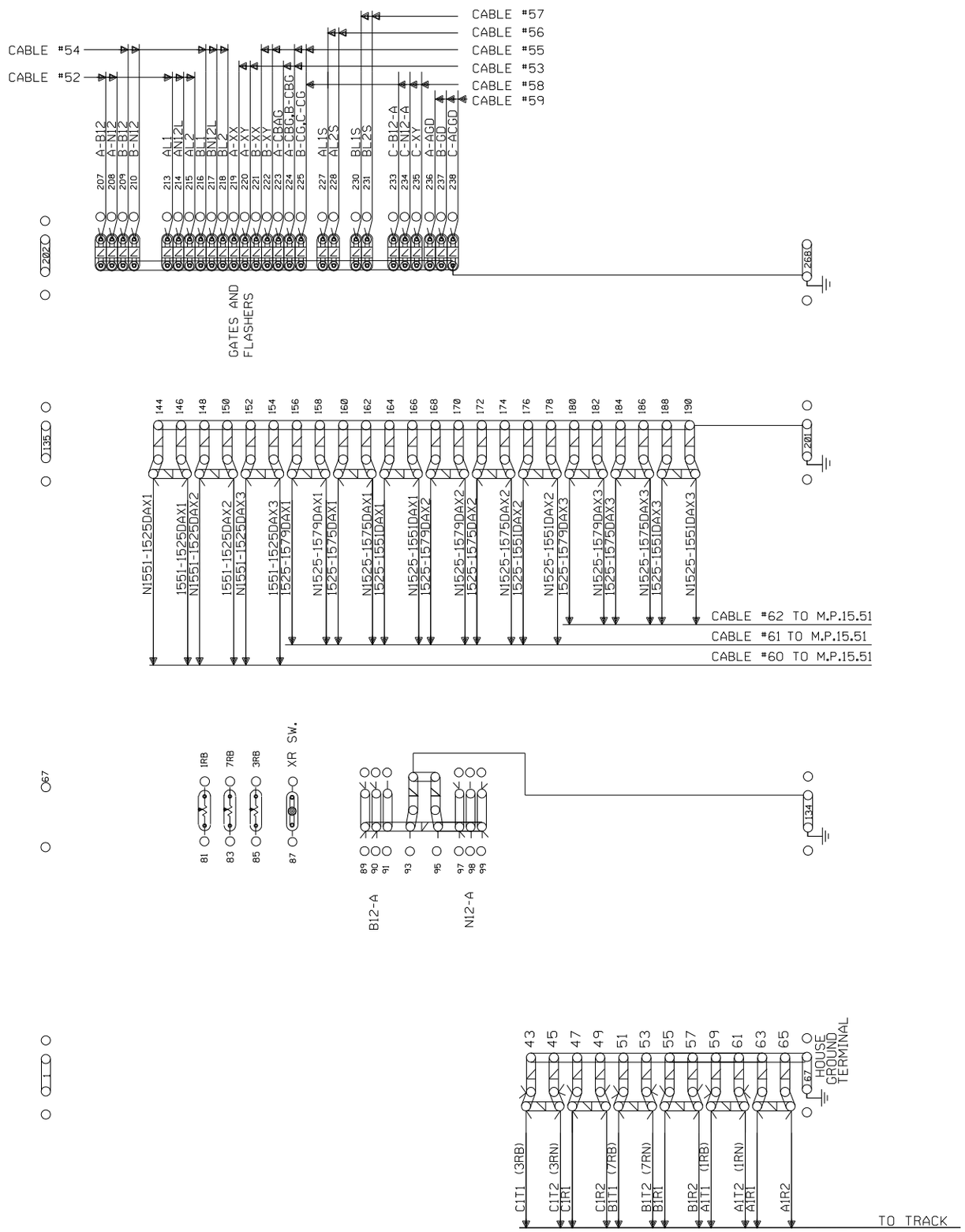

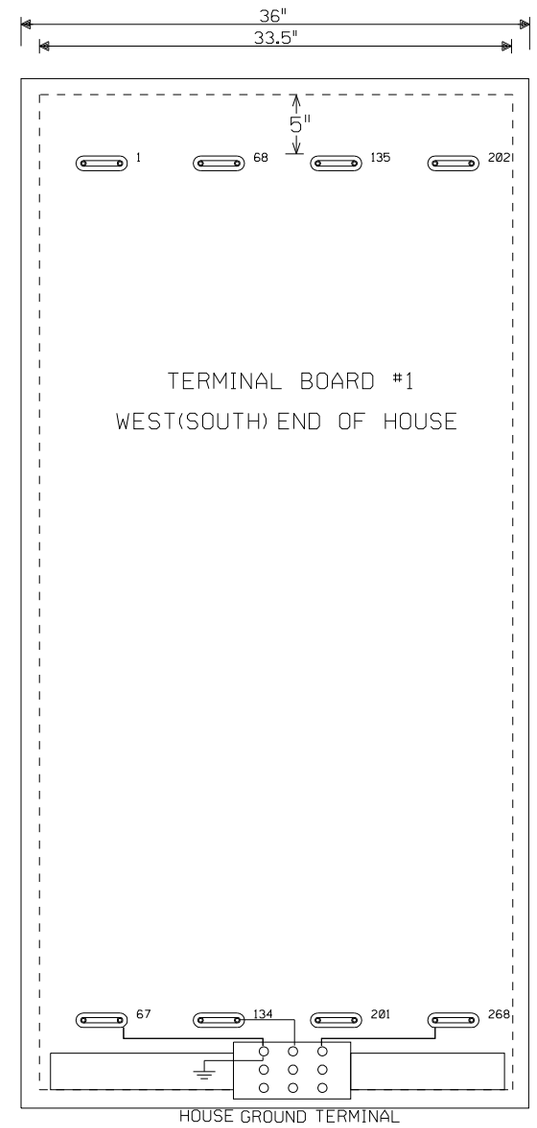

= IN

= OUT

NEW SHEET

Designed: 03/01/09 CHICAGO CREATE PROJECT B2-PHASE 2 Rec#: IS: WO#:89793 /MWK /RC /MDF	Designed: 05/01/08 CHICAGO CREATE PROJECT B2-PHASE 1 Rec#: IS: WO#:89792 /MWK /RC /MDF	MODIFICATION LEVEL	
		O.A. LAST LEVEL CHECKED	DQ
		LAST LEVEL MOD THIS TYPICAL	DQ
		LAST LEVEL BY DESIGNER	DR
		CHANGED FROM TYPICAL? REV 02/01/08 M24SUPX0.16	Y

UNION PACIFIC — QUALITY PRODUCTIVITY SAFETY — SIGNAL DESIGN

Date: 05-01-08
Des: RC
Chk: RC
AFE: 89792

UNION PACIFIC RAILROAD

PARK, ILLINOIS
8'X16' SLAVE 2 HOUSE
GENEVA SUBDIVISION

Office of Sr AVP Engineering - Signal/TCO Omaha, Nebraska

Sh.: 16
C.P. Y015
MP: 15.25
ID: GEN1525.16S

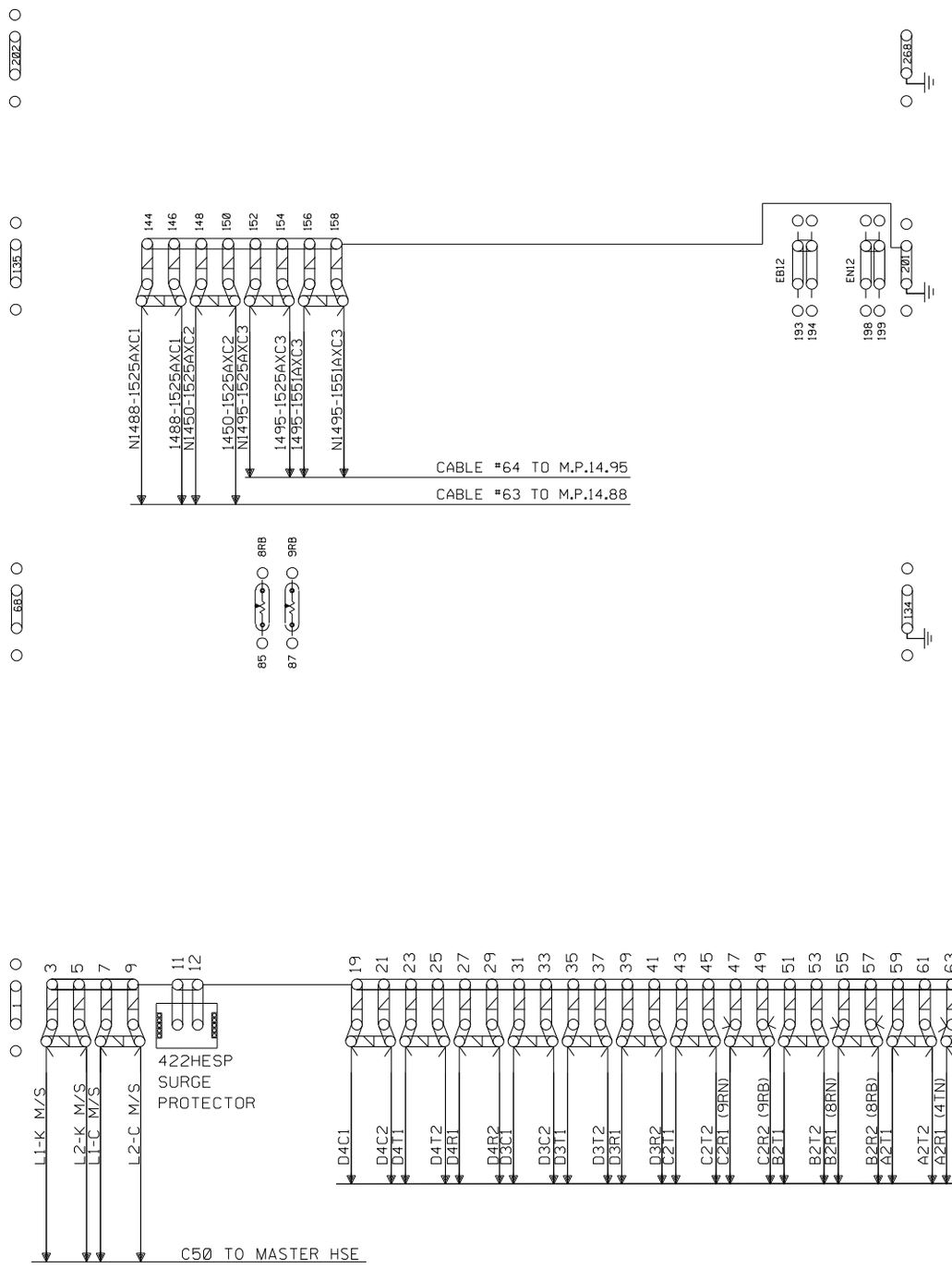

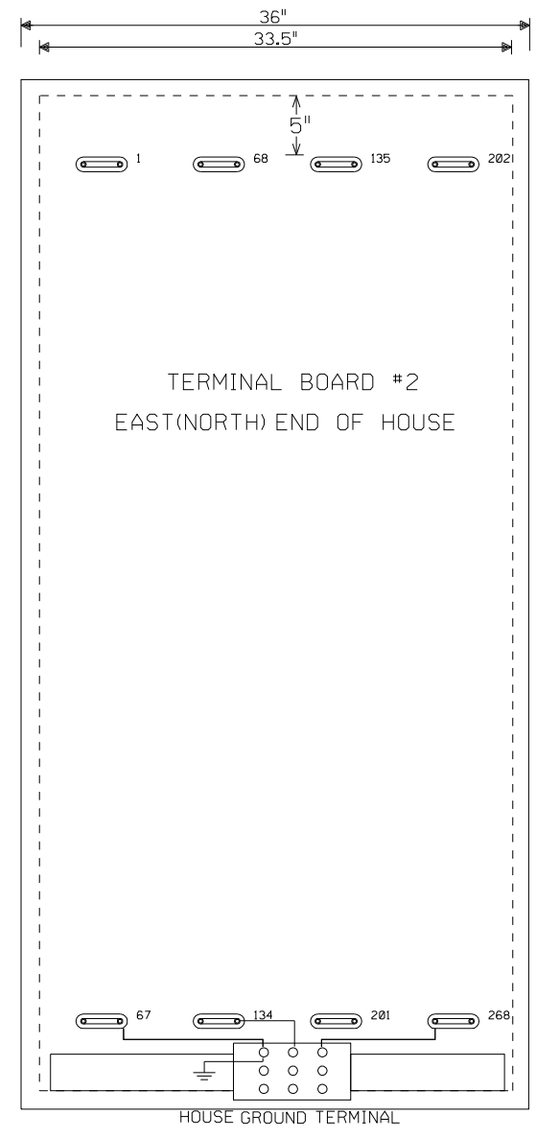

= IN

= OUT

NEW SHEET

Designed: 03/01/09 CHICAGO CREATE PROJECT B2-PHASE 2 Rec#: IS: WO#:89793 /MWK / /RC /MDF	Designed: 05/01/08 CHICAGO CREATE PROJECT B2-PHASE 1 Rec#: IS: WO#:89792 /MWK / /RC /MDF	MODIFICATION LEVEL	
		Q.A. LAST LEVEL CHECKED	DQ
		LAST LEVEL MOD THIS TYPICAL	DQ
		LAST LEVEL BY DESIGNER	DR
		CHANGED FROM TYPICAL? REV 02/01/08 M24SUPX0.17	Y

UNION PACIFIC — QUALITY PRODUCTIVITY SAFETY — SIGNAL DESIGN

Date: 05-01-08
Des: RC
Chk: RC
AFE: 89792

UNION PACIFIC RAILROAD

PARK, ILLINOIS
8'X16' SLAVE 2 HOUSE
GENEVA SUBDIVISION

Office of Sr AVP Engineering - Signal/TCO Omaha, Nebraska

Sh.: 17
C.P. Y015
MP: 15.25
ID: GEN1525.17S

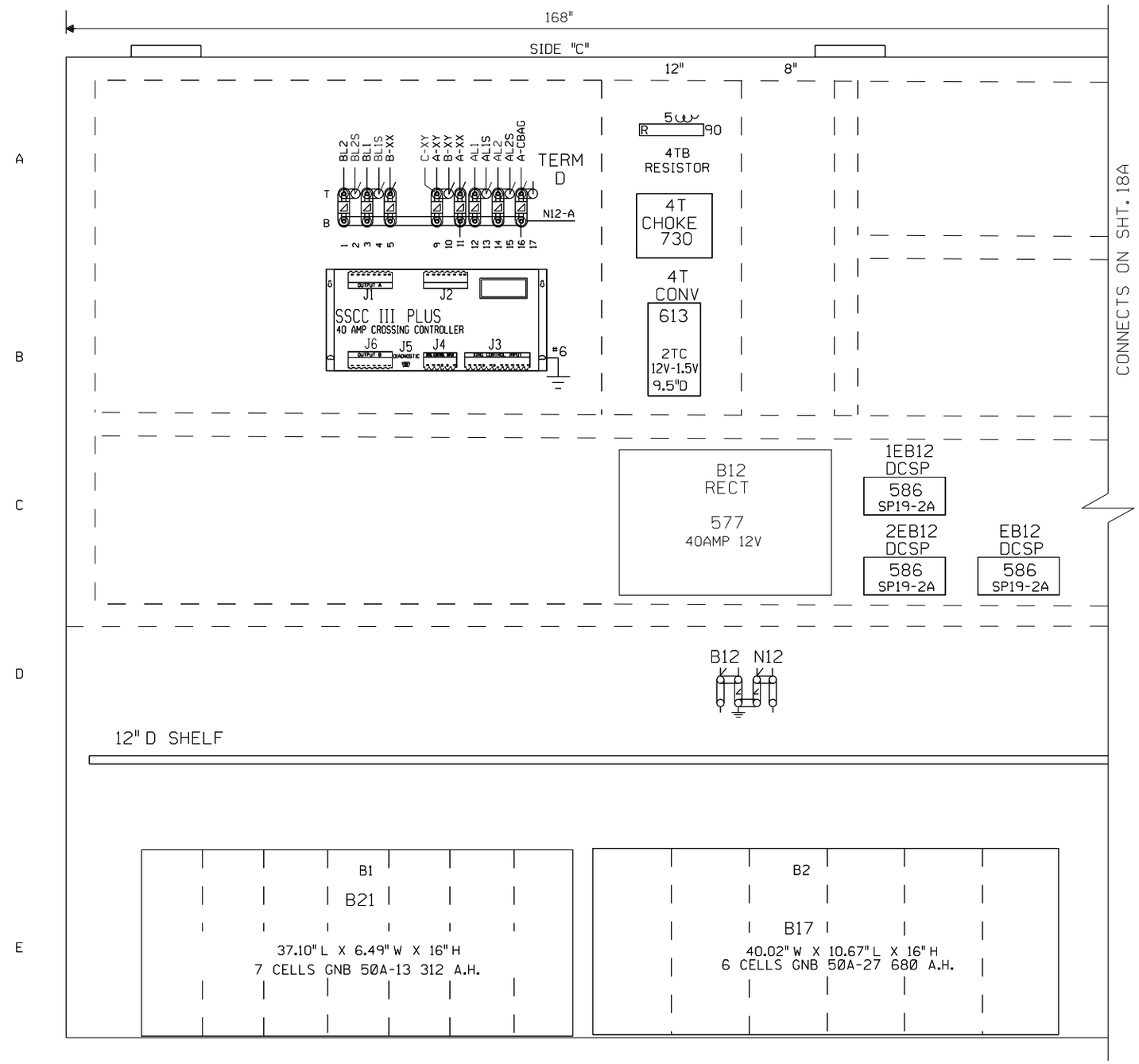

= IN

= OUT

NEW SHEET

				Designed: 03/01/09 CHICAGO CREATE PROJECT B2-PHASE 2 Rec#: IS: / WO#:89793 /MWK /RC /MDF	Designed: 05/01/08 CHICAGO CREATE PROJECT B2-PHASE I Rec#: IS: / WO#:89792 /MWK /RC /MDF	MODIFICATION LEVEL		UNION PACIFIC SAFETY SIGNAL DESIGN	Date: 05-01-08	UNION PACIFIC RAILROAD	Sh.: 18
						Q.A. LAST LEVEL CHECKED	DQ		Des: RC	PARK, ILLINOIS	C.P. Y015
						LAST LEVEL MOD THIS TYPICAL	DQ		Chk: RC	8'X16' SLAVE 2 HOUSE	MP: 15.25
						LAST LEVEL BY DESIGNER	DR			GENEVA SUBDIVISION	
						CHANGED FROM TYPICAL?	Y		AFE: 89792	Office of Sr AVP Engineering - Signal/TCO Omaha, Nebraska	ID: GEN1525.18S
						REV 02/01/08 M24SUPX0.18					

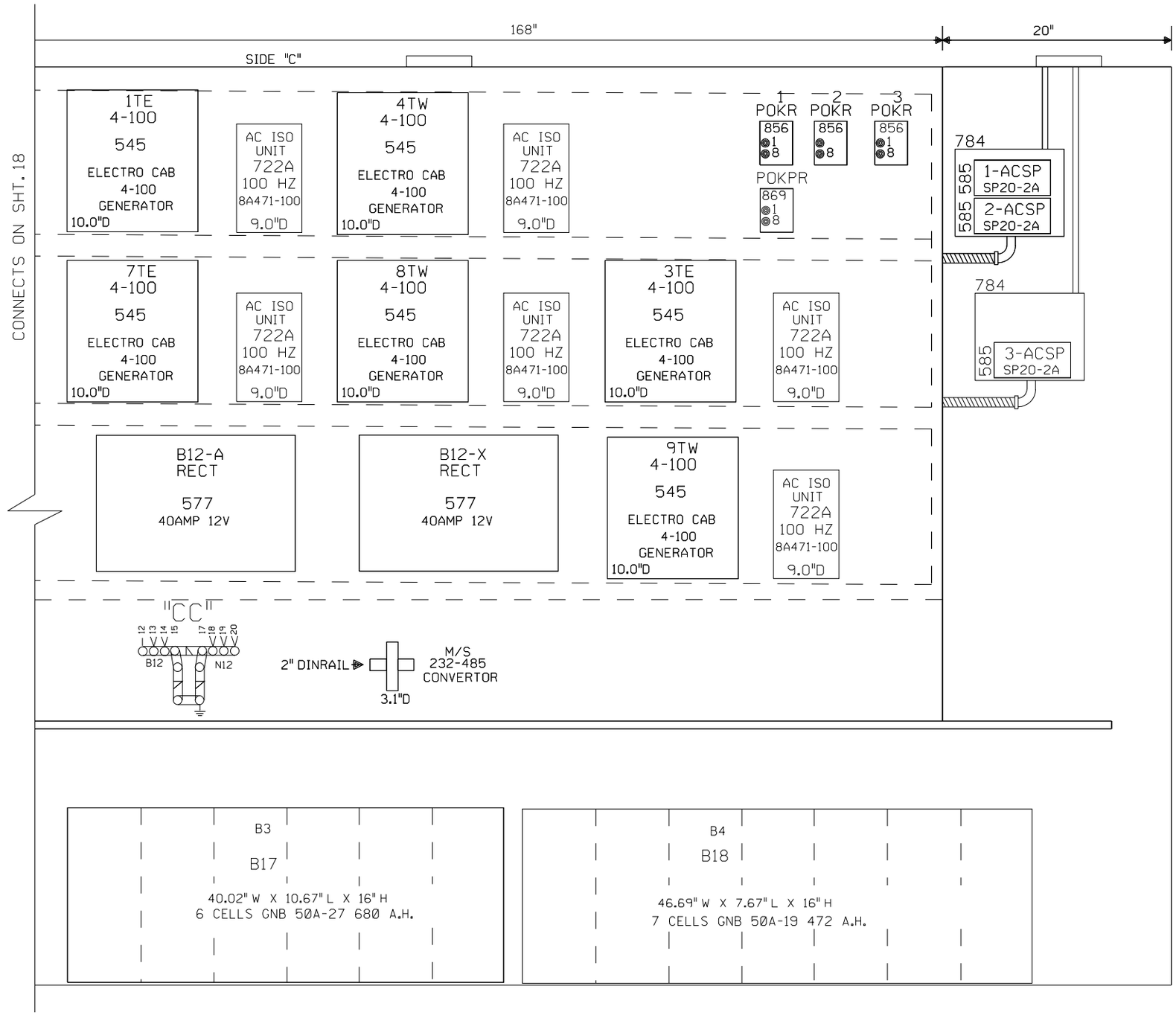

= IN

= OUT

NEW SHEET

Designed: 03/01/09	CHICAGO CREATE PROJECT B2-PHASE 2	Rec#: WO#:89793	IS: / /RC /MWK /MDF
Designed: 05/01/08	CHICAGO CREATE PROJECT B2-PHASE 1	Rec#: WO#:89792	IS: / /RC /MWK /MDF

MODIFICATION LEVEL	
Q.A. LAST LEVEL CHECKED	DQ
LAST LEVEL MOD THIS TYPICAL	DQ
LAST LEVEL BY DESIGNER	DR
CHANGED FROM TYPICAL?	Y
REV 02/01/08 M24SUPX0.18	

UNION PACIFIC
QUALITY PRODUCTIVITY SAFETY
SIGNAL DESIGN

Date: 05-01-08
Des: RC
Chk: RC
AFE: 89792

UNION PACIFIC RAILROAD
PARK, ILLINOIS
8'X16' SLAVE 2 HOUSE
GENEVA SUBDIVISION
Office of Sr AVP Engineering - Signal/TCO Omaha, Nebraska

Sh.: 18A
C.P. Y015
MP: 15.25
ID: GEN1525.18AS