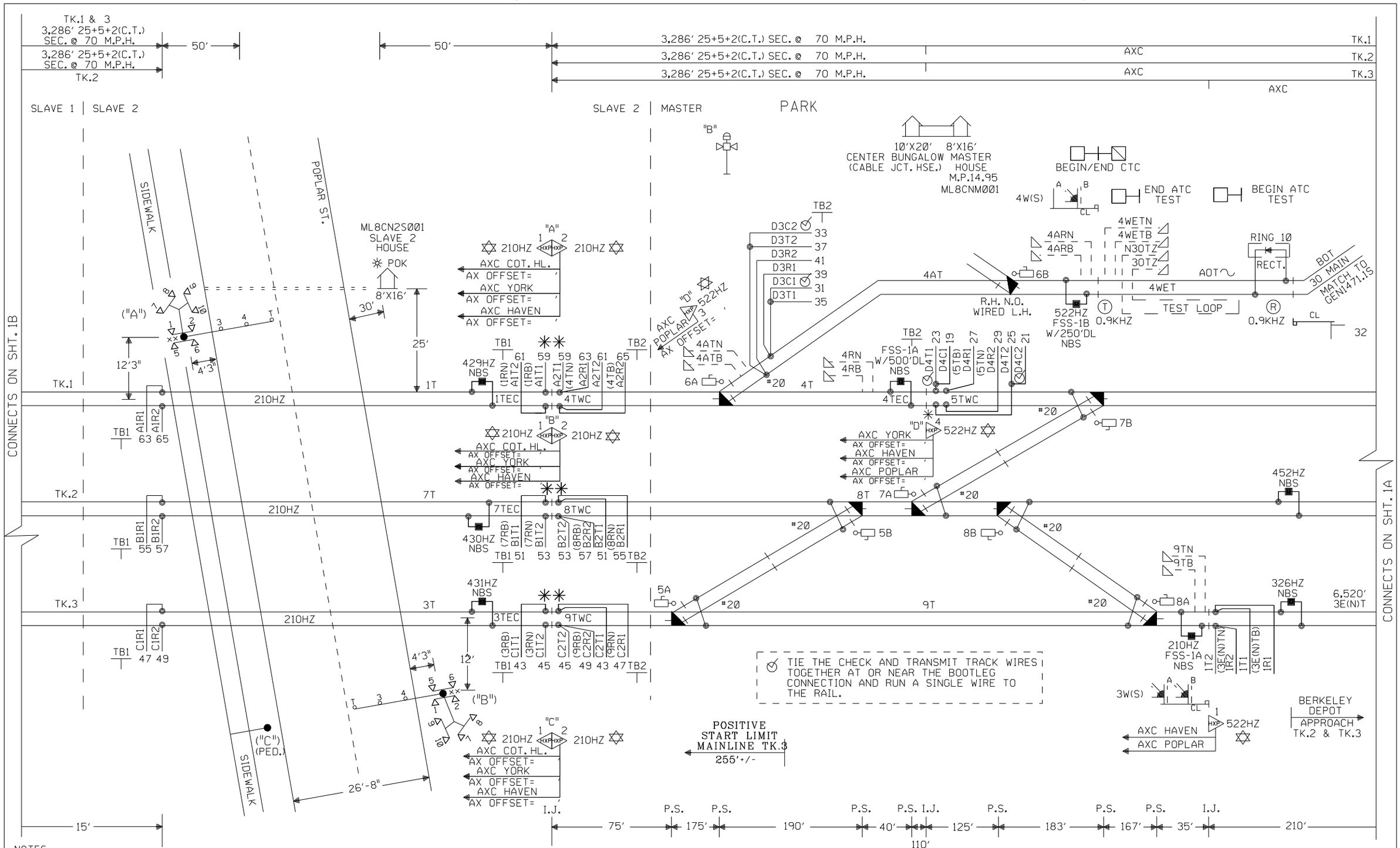

NOTES:

EAST= (N)ORTH.
WEST= (S)OUTH.

⊗ = TWISTED WIRES

⊘ = OBSERVE CORRECT POLARITY. EQUIPMENT WILL BE DAMAGED IF CONNECTIONS ARE REVERSED

ALL WIRING TO TRACK 2C. NO.6 U.G.B.T. CABLE UNLESS OTHERWISE SPECIFIED.

ALL CASE WIRING TO BE NO.16 UNLESS OTHERWISE SPECIFIED.

FOR CABLE TABULATION SEE SH. 4

ALL GROUND CONNECTIONS TO BE #6 OR LARGER, SIGNAL WIRING SHOP TO RUN ALL GROUND CONNECTIONS.

ENSURE TRACK POLARITY IS TRANSPOSED ACROSS ALL INSULATED JOINTS.

⧖ = TEST TERMINALS MUST BE INSTALLED ON ALL WIRING CONNECTED TO EXTERNAL CABLES (EXCEPT TRACK AND A.C. POWER WIRES).

ALL WIRING IN GATE MECHANISM TO BE #10 "AWG FLEX".

REFER TO UP STANDARD DWG FOR BUNGALOW GROUNDING.

ALL LIGHTS TO BE 12" ROUNDELS.

= = = = = = 4" X ' CONDUIT

LIGHTS: LED LIGHTS

GATE A: '

GATE B: '

xx = BELL

✡ = HXP TO OPERATE IN SEMI-BI DIRECTIONAL MODE.

✳ = PARTIAL CLEARANCE SECTIONAL RELEASE.

✳✳ = FULL CLEARANCE SECTIONAL RELEASE.

W(S) ◄——○——► E(N)

CONSTRUCTION NOTES :

1.- REUSE X-OVERS 1, 2, 3, 4, 5, 7, 8 AND SWITCHES 6A, 9A.

2.- REUSE GATES AND FLASHERS.

= IN

= OUT

NEW SHEET

Designed: 03/01/09 CHICAGO CREATE PROJECT B2-PHASE 2	Designed: 05/01/08 CHICAGO CREATE PROJECT B2-PHASE 1	MODIFICATION LEVEL	
Rec*: IS:	Rec*: IS:	Q.A. LAST LEVEL CHECKED	DQ
WO*: 89793 /MWK /RC /MDF	WO*: 89792 /MWK /RC /MDF	LAST LEVEL MOD THIS TYPICAL	DQ
		LAST LEVEL BY DESIGNER	DR
		CHANGED FROM TYPICAL?	Y
		REV 02/01/08 M24SUPX0.1MX	

UNION PACIFIC — QUALITY PRODUCTIVITY SAFETY — SIGNAL DESIGN

Date: 05-01-08
Des: RC
Chk: RC
AFE: 89792

UNION PACIFIC RAILROAD

PARK, ILLINOIS
POPLAR STREET
GENEVA SUBDIVISION

Office of Sr AVP Engineering - Signal/TCO Omaha, Nebraska

Sh.: 1
DOT 174020S
MP: 15.25
ID: GEN1525.1X

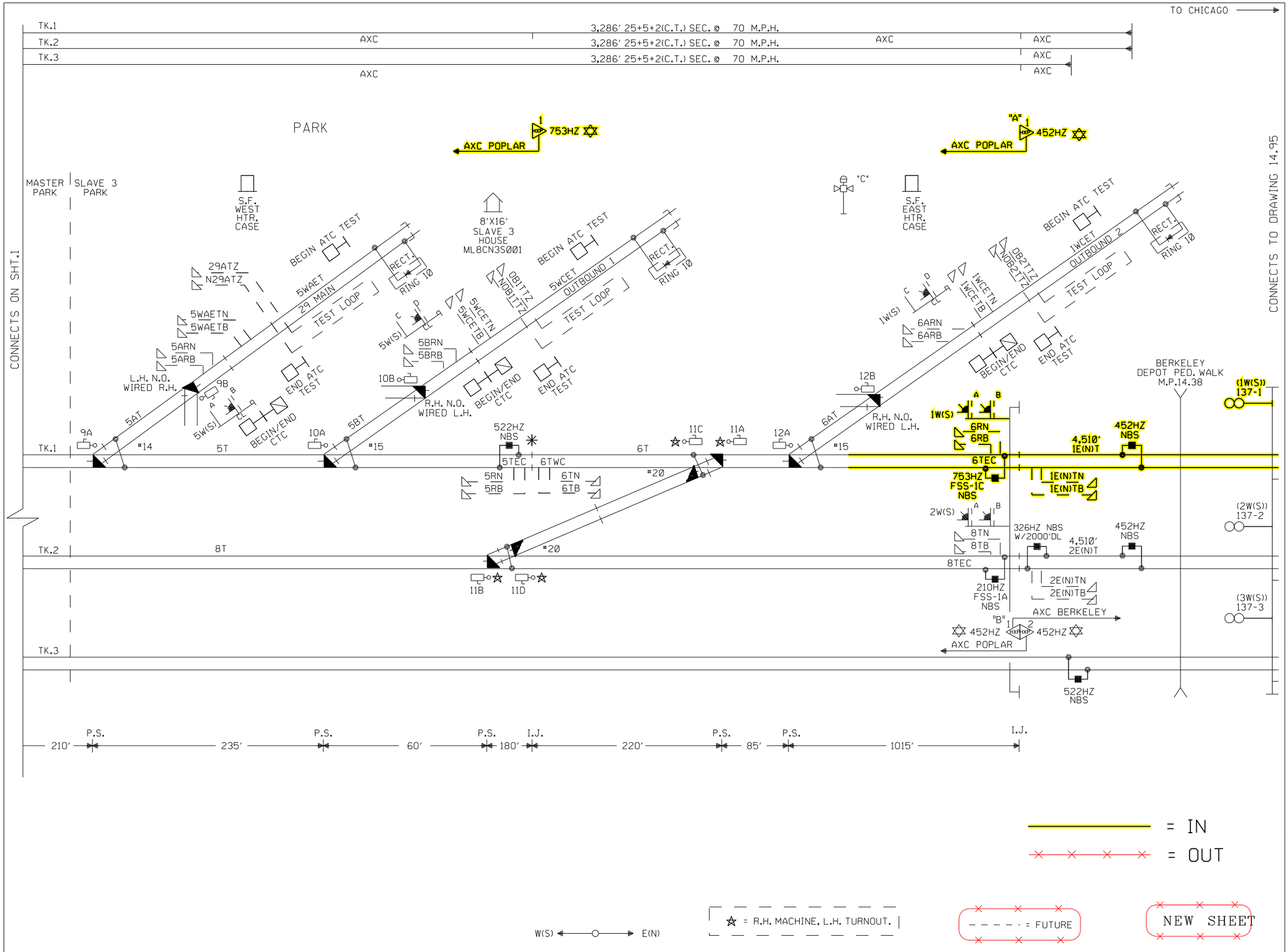

				Designed: 03/01/09 CHICAGO CREATE PROJECT B2-PHASE 2 Rec#: WO#:89793 IS: / /RC /MDF	Designed: 05/01/08 CHICAGO CREATE PROJECT B2-PHASE 1 Rec#: WO#:89792 IS: / /RC /MDF	MODIFICATION LEVEL Q.A. LAST LEVEL CHECKED DQ LAST LEVEL MOD THIS TYPICAL DQ LAST LEVEL BY DESIGNER DR CHANGED FROM TYPICAL? Y REV 02/01/08 M24SUPX0.1MX	UNION PACIFIC QUALITY PRODUCTIVITY SAFETY SIGNAL DESIGN	Date: 05-01-08 Des: RC Chk: RC AFE: 89792	UNION PACIFIC RAILROAD PARK, ILLINOIS POPLAR STREET GENEVA SUBDIVISION Office of Sr AVP Engineering - Signal/TCO Omaha, Nebraska	Sh.: 1A DOT 174020S MP: 15.25 ID: GEN1525.1AX

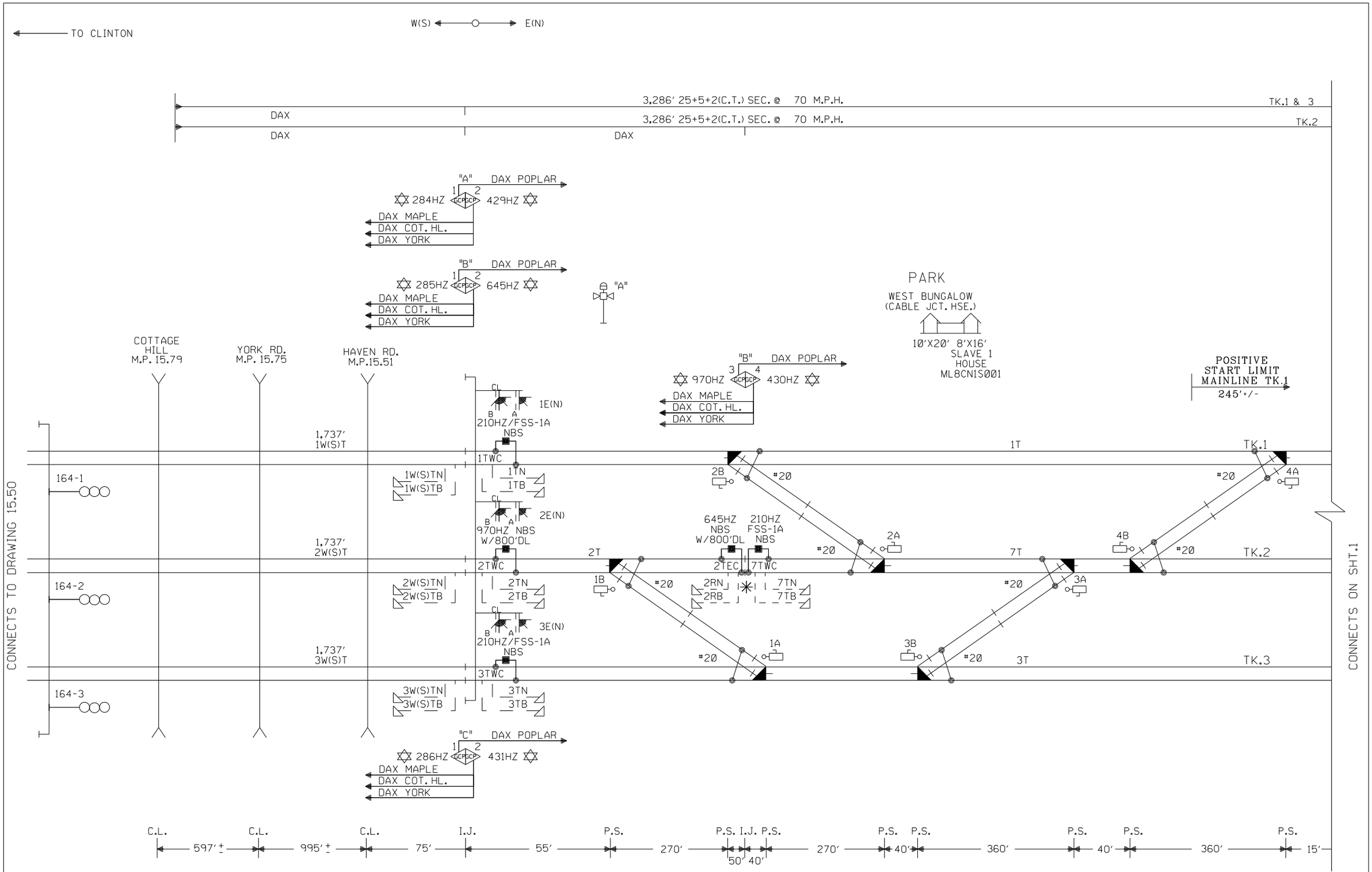

				Designed: 03/01/09 CHICAGO CREATE PROJECT B2-PHASE 2 Rec#: WO#:89793 IS: /MWK /RC /MDF	Designed: 05/01/08 CHICAGO CREATE PROJECT B2-PHASE 1 Rec#: WO#:89792 IS: /MWK /RC /MDF	MODIFICATION LEVEL Q.A. LAST LEVEL CHECKED DQ LAST LEVEL MOD THIS TYPICAL DQ LAST LEVEL BY DESIGNER DR CHANGED FROM TYPICAL? Y REV 02/01/08 M24SUPX0.1MX	UNION PACIFIC QUALITY PRODUCTIVITY SAFETY SIGNAL DESIGN	Date: 05-01-08 Des: RC Chk: RC AFE: 89792	UNION PACIFIC RAILROAD PARK, ILLINOIS POPLAR STREET GENEVA SUBDIVISION Office of Sr AVP Engineering - Signal/TCO Omaha, Nebraska	Sh.: 1B DOT 174020S MP: 15.25 ID: GEN1525.1BX

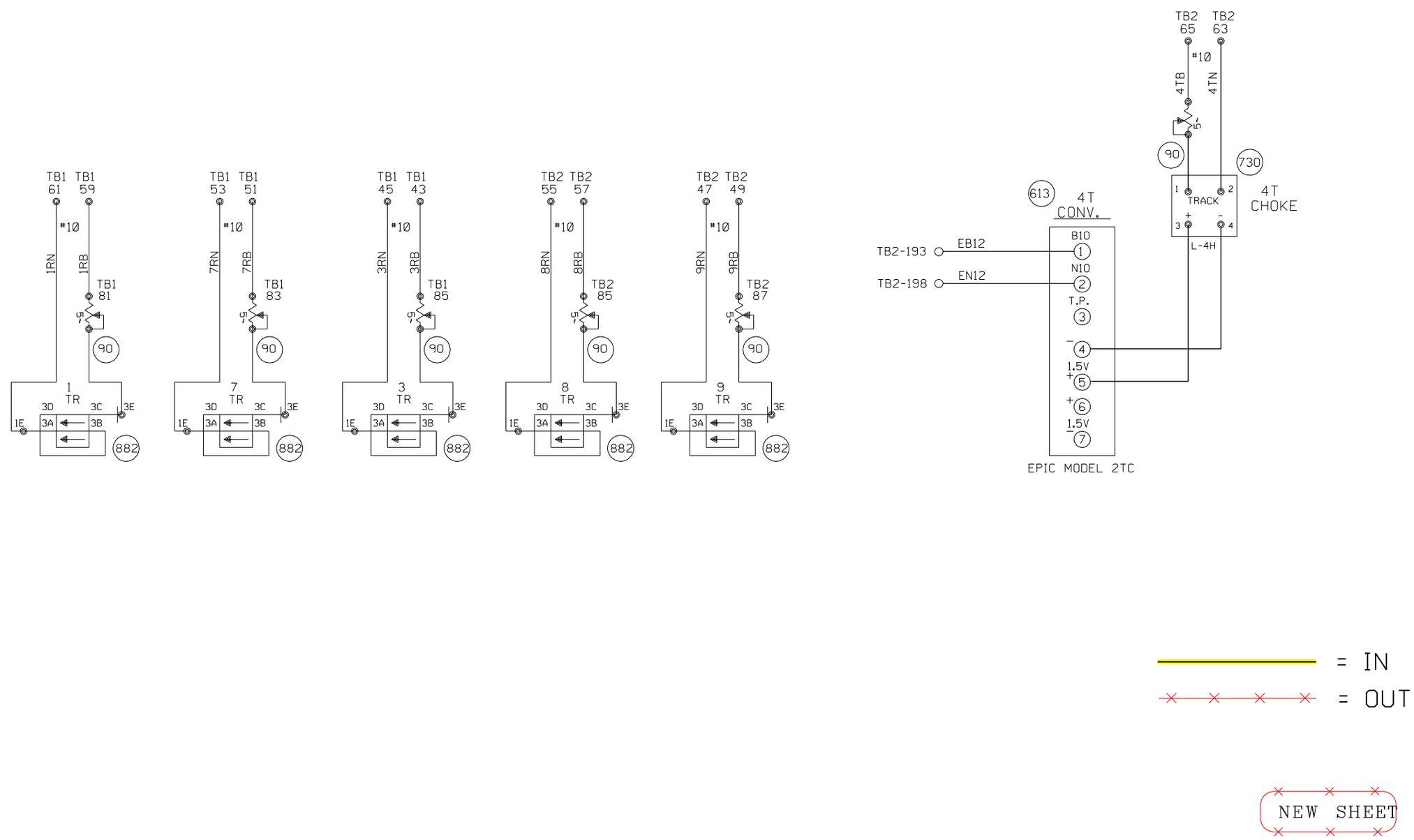

				Designed: 03/01/09 CHICAGO CREATE PROJECT B2-PHASE 2 Rec#: WO#:89793 IS: /MWK / /RC /MDF	Designed: 05/01/08 CHICAGO CREATE PROJECT B2-PHASE 1 Rec#: WO#:89792 IS: /MWK / /RC /MDF	MODIFICATION LEVEL Q.A. LAST LEVEL CHECKED DQ LAST LEVEL MOD THIS TYPICAL DQ LAST LEVEL BY DESIGNER DR CHANGED FROM TYPICAL? Y REV 02/01/08 M24SUPX0.1MX	UNION PACIFIC QUALITY PRODUCTIVITY SAFETY SIGNAL DESIGN	Date: 05-01-08 Des: RC Chk: RC AFE: 89792	UNION PACIFIC RAILROAD PARK, ILLINOIS 8'X16' SLAVE 2 HOUSE GENEVA SUBDIVISION Office of Sr AVP Engineering - Signal/TCO Omaha, Nebraska	Sh.: 1C C.P. Y015 MP: 15.25 ID: GEN1525.1CS

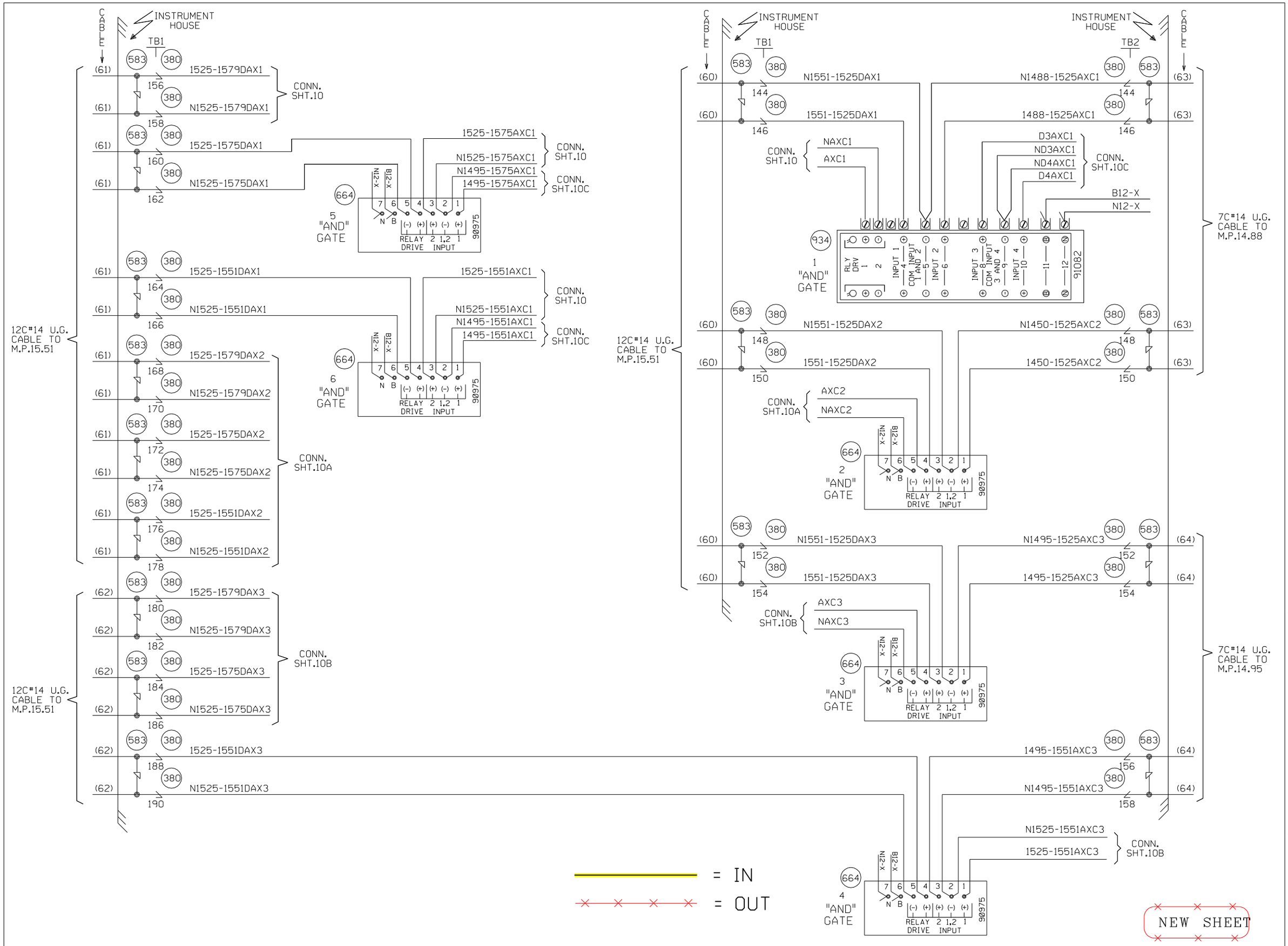

Designed: 03/01/09 CHICAGO CREATE PROJECT B2-PHASE 2 Rec#: IS: WO#:89793 /MWK / /RC /MDF	Designed: 05/01/08 CHICAGO CREATE PROJECT B2-PHASE I Rec#: IS: WO#:89792 /MWK / /RC /MDF	MODIFICATION LEVEL	
		Q. A. LAST LEVEL CHECKED	DQ
		LAST LEVEL MOD THIS TYPICAL	DQ
		LAST LEVEL BY DESIGNER	DR
		CHANGED FROM TYPICAL?	Y
		REV 02/01/08 M24SUPX0.1MX	

UNION PACIFIC — QUALITY PRODUCTIVITY SAFETY — SIGNAL DESIGN

Date: 05-01-08
Des: RC
Chk: RC
AFE: 89792

UNION PACIFIC RAILROAD

PARK, ILLINOIS
POPLAR STREET
GENEVA SUBDIVISION

Office of Sr AVP Engineering - Signal/TCO Omaha, Nebraska

Sh.:	1D
DOT	174020S
MP:	15.25
ID:	GEN1525.1DX

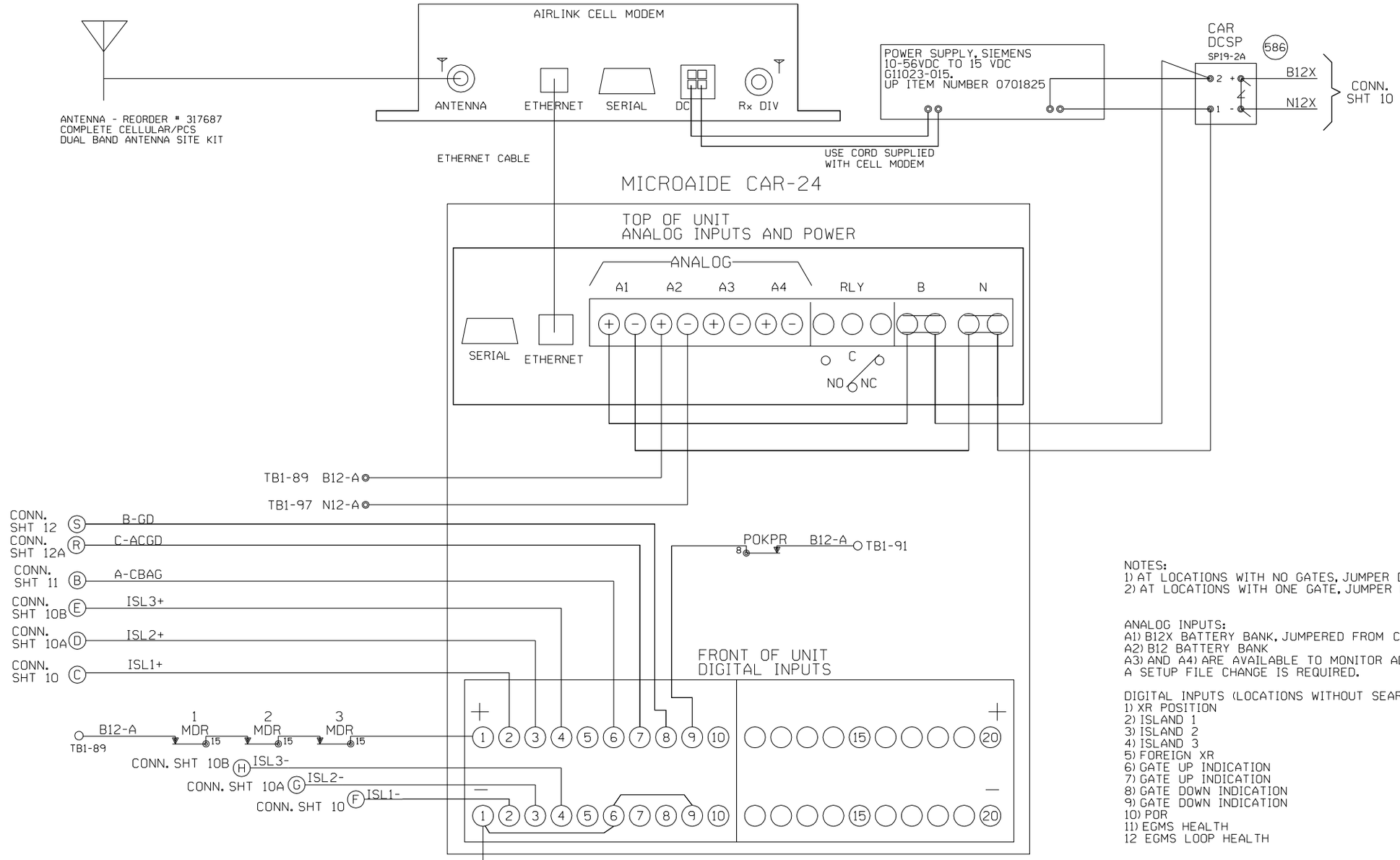

NOTES:
1) AT LOCATIONS WITH NO GATES, JUMPER D7, D8, D9 TO B12-A.
2) AT LOCATIONS WITH ONE GATE, JUMPER D8 TO D9.

ANALOG INPUTS:
A1) B12X BATTERY BANK, JUMPERED FROM CAR24 POWER INPUTS
A2) B12 BATTERY BANK
A3) AND A4) ARE AVAILABLE TO MONITOR ADDITIONAL BATTERY BANKS.
A SETUP FILE CHANGE IS REQUIRED.

DIGITAL INPUTS (LOCATIONS WITHOUT SEARII)
1) XR POSITION
2) ISLAND 1
3) ISLAND 2
4) ISLAND 3
5) FOREIGN XR
6) GATE UP INDICATION
7) GATE UP INDICATION
8) GATE DOWN INDICATION
9) GATE DOWN INDICATION
10) POR
11) EGMS HEALTH
12 EGMS LOOP HEALTH

Alarm Code	Monitored Event Name	Monitored Event Description	Alarm Cleared
OK	Health Check	Sent once every 48 hours.	
IP	AC Power Off 20 Minutes	The POR input has been down for at least 20 minutes.	The POR input comes back on for at least 5 minutes after an AC Power Off Alarm
PK	AC Power Off 2 Hours	The POR input has been down for at least 2 hours.	The POR input comes back on for at least 5 minutes after an AC Power Off Alarm
B1	Battery Bank #1 Out of Range	Battery 1 is below 81% or above 120% of the calibrated value for at least 5 minutes.	Battery 1 is within acceptable range for at least 5 minutes.
B2	Battery Bank #2 Out of Range	Battery 2 is below 81% or above 120% of the calibrated value for at least 5 minutes.	Battery 2 is within acceptable range for at least 5 minutes.
GU	Gate Not Up	The Gate Up indication is not indicating true after XR has been clear for at least 180 seconds.	The Gate Up indication indicated true after a Gate Not Up alarm was triggered.
GD	Gate Not Down	The Gate Down indication is not indicating true after XR has been down for at least 45 seconds.	The Gate Down indication indicated true after a Gate Not Down alarm was triggered.
LA	Xing Activation over 30 Min.	Xing Activation over 30 Min.	Crossing has recovered after a Long Activation Alarm had occured.
EO	LIGHTS OUT ALARM	LOD (IF APPLICABLE) indicates true for monitored lamp circuit and XR has been down for at least 10 seconds.	LOD indicates false for at least 10 seconds.

NEW SHEET

Designed: 05/13/11
CHICAGO CREATE PROJECT B2-PHASE2
Rec#: WO#:89793
IS: /MWK /RC /MDF

Designed: 05/01/08
CHICAGO CREATE PROJECT B2-PHASE 1
Rec#: WO#:89792
IS: /MWK /RC /MDF

MODIFICATION LEVEL	
Q. A. LAST LEVEL CHECKED	DU
LAST LEVEL MOD THIS TYPICAL	DU
LAST LEVEL BY DESIGNER	DU
CHANGED FROM TYPICAL?	Y
Rev 01.24.11 4K ACDCCAR24.3	

UNION PACIFIC
QUALITY PRODUCTIVITY SAFETY
SIGNAL DESIGN

Date: 05-01-08
Des: RC
Chk: RC
AFE: 89792

UNION PACIFIC RAILROAD
PARK, ILLINOIS
POPLAR STREET
GENEVA SUBDIVISION
Office of Sr AVP Engineering - Signal/TCO Omaha, Nebraska

Sh.: 1E
DOT 174020S
MP: 15.25
ID: GEN1525.1EX

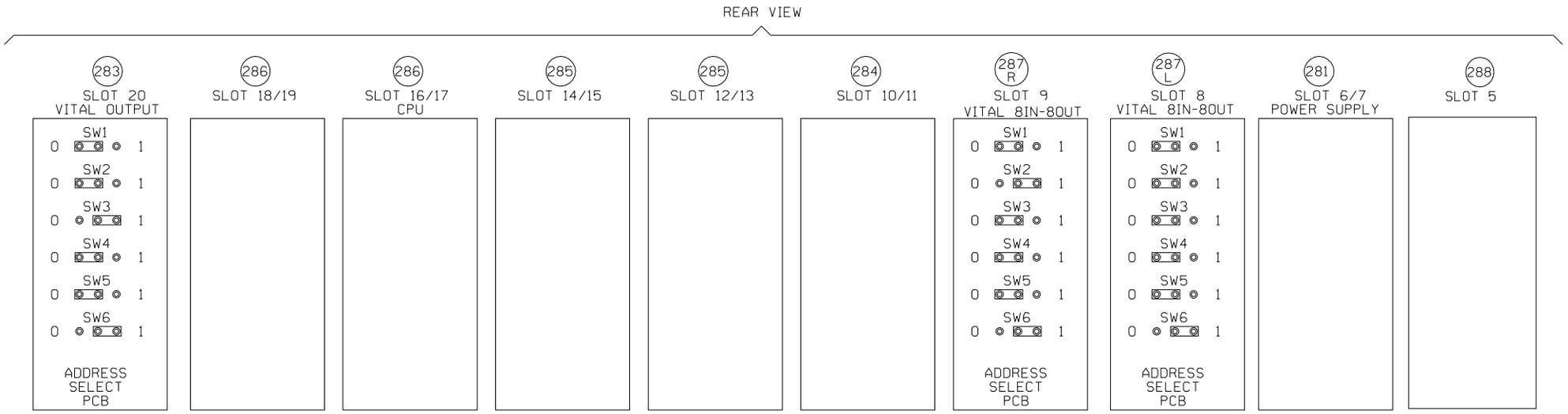

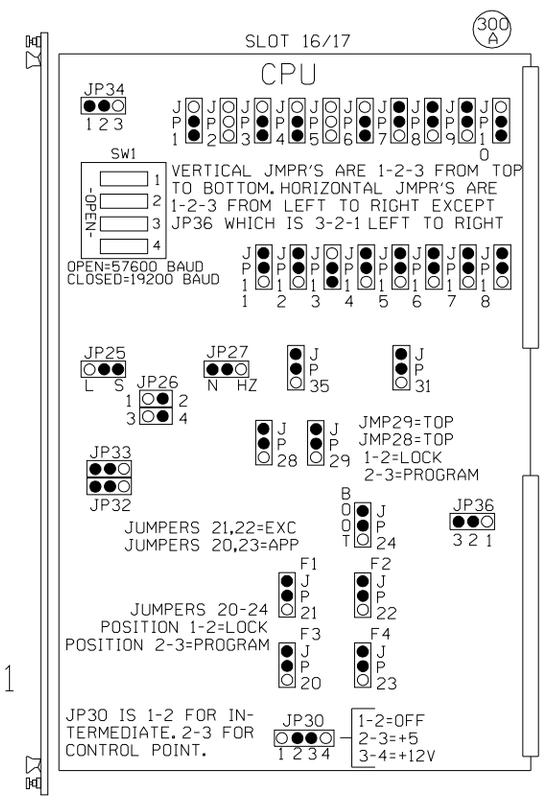

VITAL CONFIGURATION PROGRAM SETTINGS

PROGRAM ID (BINARY 1)	
PROGRAM ID (BINARY 2)	
PROGRAM ID (BINARY 4)	
PROGRAM ID (BINARY 8)	
PROGRAM ID (BINARY 16)	
PROGRAM ID (BINARY 32)	
PROGRAM ID (BINARY 64)	
PROGRAM ID (BINARY 128)	
PROGRAM ID (BINARY 256)	
PROGRAM ID (BINARY 512)	
PROGRAM ID (BINARY 1024)	
PROGRAM ID (BINARY 2048)	

UP PROGRAM ID = ML8CN2S001

PLACE AN "X" IN THE BOX FOR DESIRED CONFIGURATION.

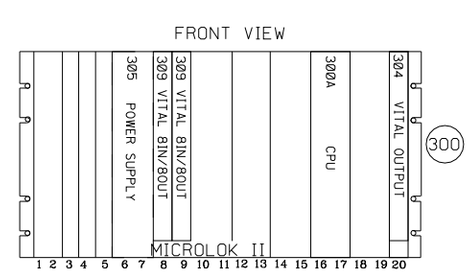

= IN

= OUT

NEW SHEET

				Designed: 03/01/09 CHICAGO CREATE PROJECT B2-PHASE 2 Rec#: WO#:89793 IS: /MWK / /RC /MDF	Designed: 05/01/08 CHICAGO CREATE PROJECT B2-PHASE 1 Rec#: WO#:89792 IS: /MWK / /RC /MDF	MODIFICATION LEVEL Q.A. LAST LEVEL CHECKED DQ LAST LEVEL MOD THIS TYPICAL DQ LAST LEVEL BY DESIGNER DR CHANGED FROM TYPICAL? Y REV 02/01/08 M24SUPX0.2	UNION PACIFIC QUALITY PRODUCTIVITY SAFETY SIGNAL DESIGN	Date: 05-01-08 Des: RC Chk: RC AFE: 89792	UNION PACIFIC RAILROAD PARK, ILLINOIS 8'X16' SLAVE 2 HOUSE GENEVA SUBDIVISION Office of Sr AVP Engineering - Signal/TCO Omaha, Nebraska	Sh.: 2 C.P. Y015 MP: 15.25 ID: GEN1525.2S

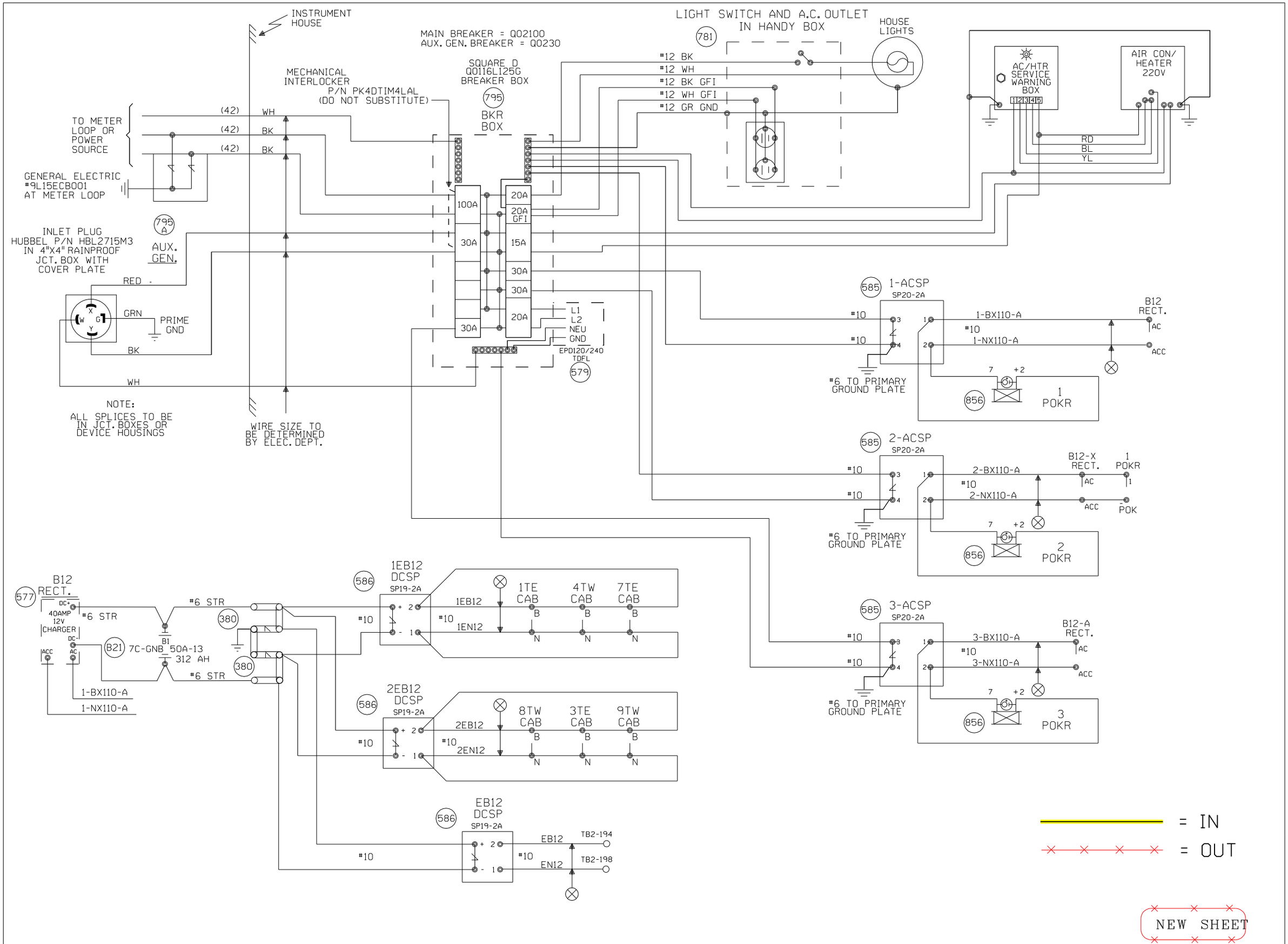

				Designed: 03/01/09 CHICAGO CREATE PROJECT B2-PHASE 2 Rec#: WO#:89793 IS: /MWK /RC /MDF	Designed: 05/01/08 CHICAGO CREATE PROJECT B2-PHASE 1 Rec#: WO#:89792 IS: /MWK /RC /MDF	MODIFICATION LEVEL		UNION PACIFIC QUALITY PRODUCTIVITY SAFETY SIGNAL DESIGN	Date: 05-01-08 Des: RC Chk: RC AFE: 89792	UNION PACIFIC RAILROAD PARK, ILLINOIS 8'X16' SLAVE 2 HOUSE GENEVA SUBDIVISION Office of Sr AVP Engineering - Signal/TCO Omaha, Nebraska	Sh.: 3 C.P. Y015 MP: 15.25 ID: GEN1525.3S
						Q. A. LAST LEVEL CHECKED	DQ				
						LAST LEVEL MOD THIS TYPICAL	DQ				
						LAST LEVEL BY DESIGNER	DR				
						CHANGED FROM TYPICAL? REV 02/01/08 M24SUPX0.3	Y				

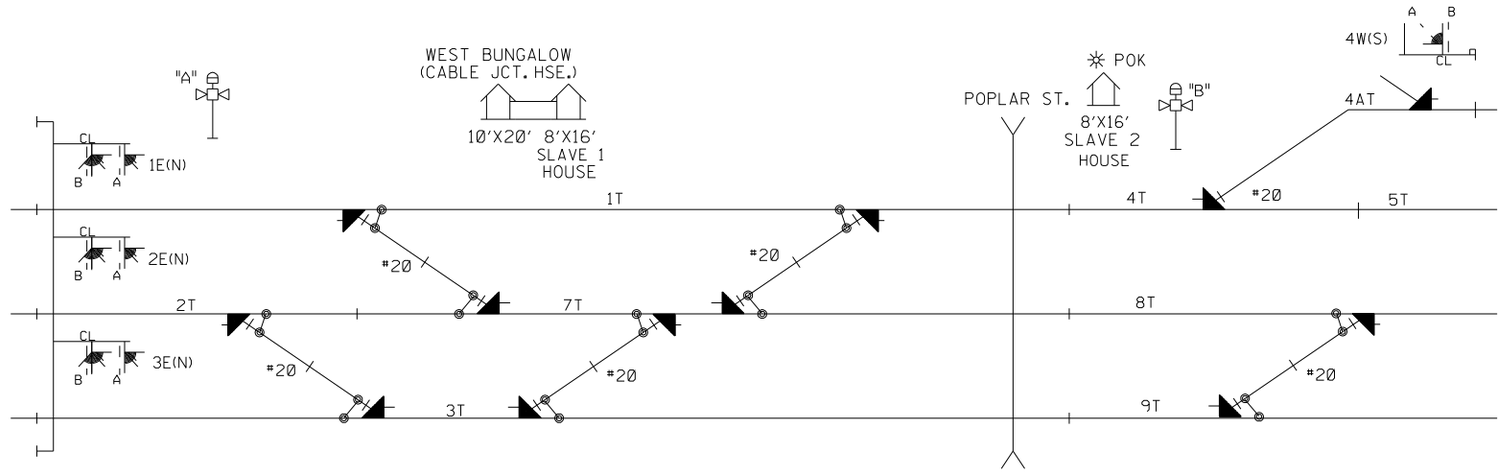

CABLE TABULATION

CABLE NO.42 SIZE TO BE DETERMINED BY ELECTRICAL DEPARTMENT

CABLE NO.50 6 PR. BELDON CABLE SHIELDED #22 AWG. STRANDED P/N 9886 TO MASTER HSE.

CABLE NO.60 12C.NO. 14 U.G.B.T. HOUSE TO M.P.15.51
CABLE NO.61 12C.NO. 14 U.G.B.T. HOUSE TO M.P.15.51
CABLE NO.62 12C.NO. 14 U.G.B.T. HOUSE TO M.P.15.51
CABLE NO.63 7C.NO. 14 U.G.B.T. HOUSE TO M.P.14.88
CABLE NO.64 7C.NO. 14 U.G.B.T. HOUSE TO M.P.14.95

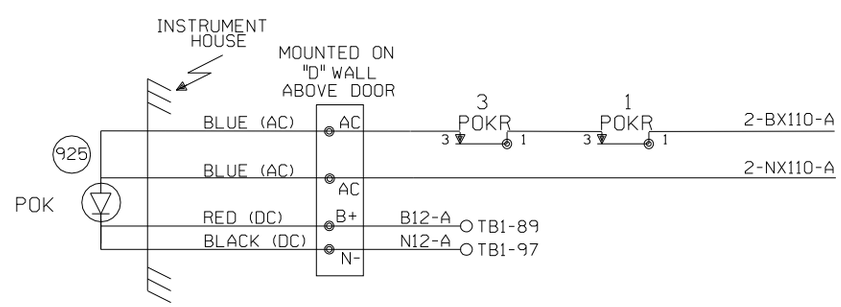

= IN

= OUT

NEW SHEET

				Designed: 03/01/09 CHICAGO CREATE PROJECT B2-PHASE 2 Rec#: WO#:89793 IS: /MWK / /RC /MDF	Designed: 05/01/08 CHICAGO CREATE PROJECT B2-PHASE 1 Rec#: WO#:89792 IS: /MWK / /RC /MDF	MODIFICATION LEVEL O. A. LAST LEVEL CHECKED DQ LAST LEVEL MOD THIS TYPICAL DQ LAST LEVEL BY DESIGNER DR CHANGED FROM TYPICAL? Y REV 02/01/08 M24SUPX0.3B	UNION PACIFIC QUALITY PRODUCTIVITY SAFETY SIGNAL DESIGN	Date: 05-01-08 Des: RC Chk: RC AFE: 89792	UNION PACIFIC RAILROAD PARK, ILLINOIS 8'X16' SLAVE 2 HOUSE GENEVA SUBDIVISION Office of Sr AVP Engineering - Signal/TCO Omaha, Nebraska	Sh.: 4 C.P. Y015 MP: 15.25 ID: GEN1525.4S

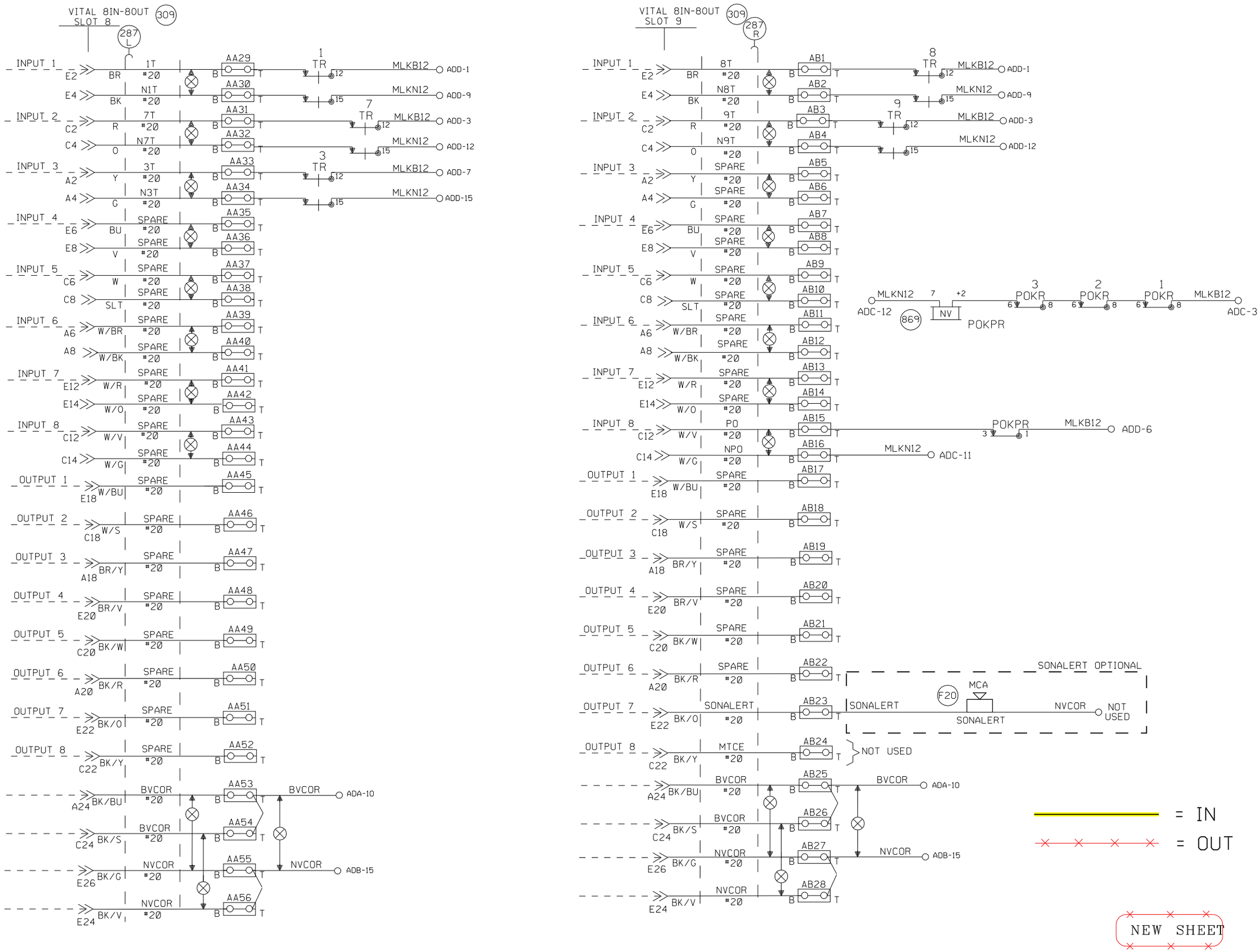

Designed: 03/01/09 CHICAGO CREATE PROJECT B2-PHASE 2 Rec#: IS: WO#:89793 /MWK / /RC /MDF	Designed: 05/01/08 CHICAGO CREATE PROJECT B2-PHASE 1 Rec#: IS: WO#:89792 /MWK / /RC /MDF	MODIFICATION LEVEL		UNION PACIFIC QUALITY PRODUCTIVITY SAFETY SIGNAL DESIGN	Date: 05-01-08	UNION PACIFIC RAILROAD	Sh.: 5
		Q.A. LAST LEVEL CHECKED	DQ		Des: RC	PARK, ILLINOIS	C.P. Y015
		LAST LEVEL MOD THIS TYPICAL	DQ		Chk: RC	8'X16' SLAVE 2 HOUSE	MP: 15.25
		LAST LEVEL BY DESIGNER	DR		AFE: 89792	GENEVA SUBDIVISION	ID: GEN1525.5S
		CHANGED FROM TYPICAL? REV 02/01/08 M24SUPX0.5	Y			Office of Sr AVP Engineering - Signal/TCO Omaha, Nebraska	