$WATERMARK

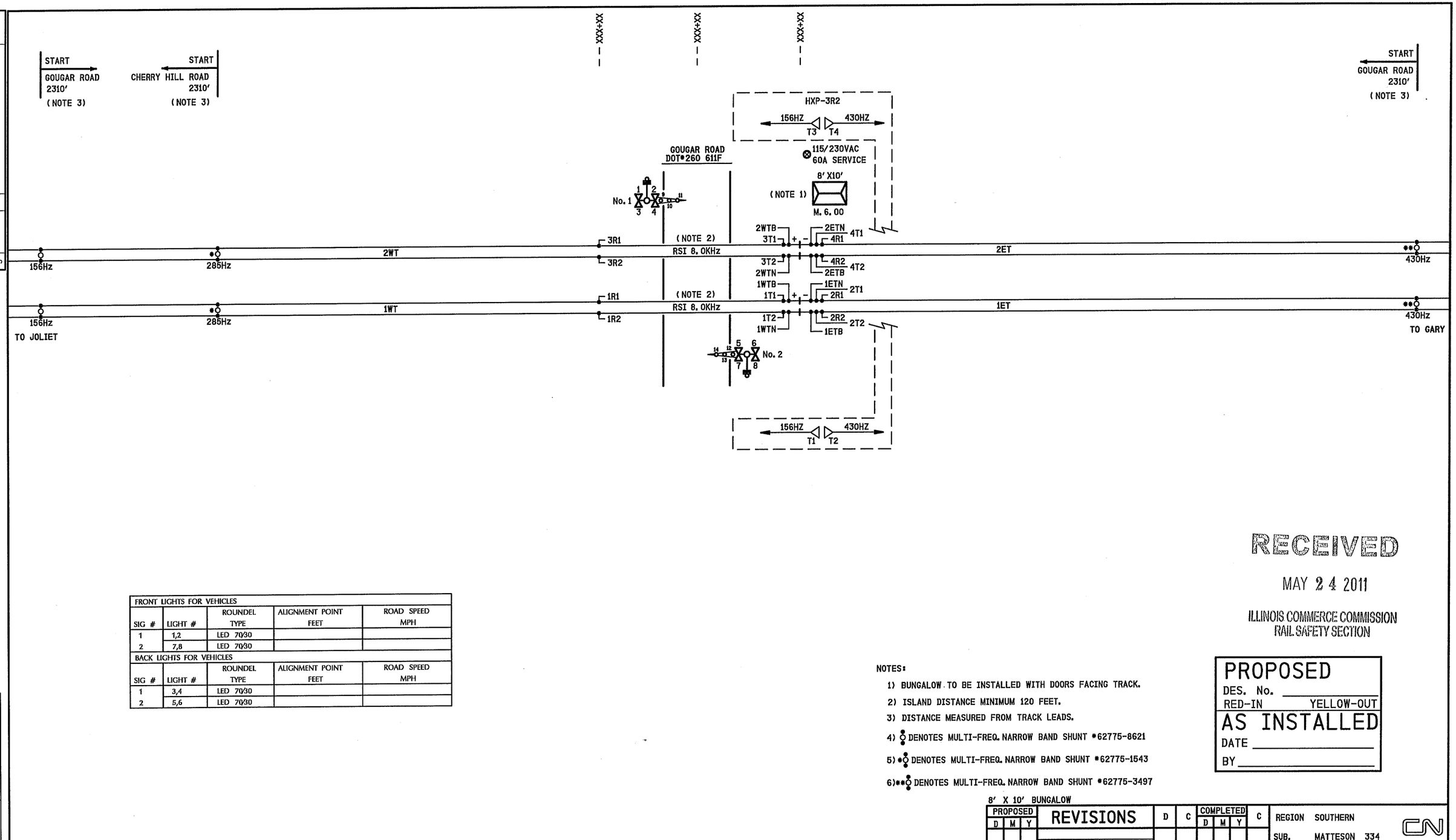

FRONT LIGHTS FOR VEHICLES				
SIG #	LIGHT #	ROUNDEL TYPE	ALIGNMENT POINT FEET	ROAD SPEED MPH
1	1,2	LED 70/30		
2	7,8	LED 70/30		
BACK LIGHTS FOR VEHICLES				
SIG #	LIGHT #	ROUNDEL TYPE	ALIGNMENT POINT FEET	ROAD SPEED MPH
1	3,4	LED 70/30		
2	5,6	LED 70/30		

NOTES:

1) BUNGALOW TO BE INSTALLED WITH DOORS FACING TRACK.
2) ISLAND DISTANCE MINIMUM 120 FEET.
3) DISTANCE MEASURED FROM TRACK LEADS.
4) DENOTES MULTI-FREQ. NARROW BAND SHUNT #62775-8621
5) * DENOTES MULTI-FREQ. NARROW BAND SHUNT #62775-1543
6) ** DENOTES MULTI-FREQ. NARROW BAND SHUNT #62775-3497

8' X 10' BUNGALOW

RECEIVED
MAY 24 2011
ILLINOIS COMMERCE COMMISSION
RAIL SAFETY SECTION

PROPOSED
DES. No. _____
RED-IN YELLOW-OUT
AS INSTALLED
DATE _____
BY _____

PROPOSED D	M	Y	REVISIONS	D	C	COMPLETED D	M	Y	C

REGION SOUTHERN
SUB. MATTESON 334
CN

SIGNALS AND COMMUNICATIONS HOMEWOOD
19 MAY 2010
DES. MKN
CH. DTB

TRACK LAYOUT
GOUGAR ROAD
MOKENA, IL

MTS-006. 00-01

SAFETRAN SYSTEM CORP.
LOUISVILLE DIVISION, LOUISVILLE, KY

19

REVISIONS				
NO.	DATE	BY	DESCRIPTION	APP. BY
1				
2				
3				
4				
5				

SAFETRAN SYSTEMS CORPORATION

DES. : MKN	DATE: 19/05/10	JOB NO. : JXXE01548	
CKD. : DTB	ISSUE DATE: N/A	EST. NO. :	
DRN. : DL	PLAN NO. : N/A	SHEET 1 OF 19	
P TIME: 15:36	P DATE: 09-MAR-2011	CAD ID. : MTS-006. 00-01	

mts-006. 00-01. dgn
09-MAR-2011

$WATERMARK

REVISIONS				
NO.	DATE	BY	DESCRIPTION	APP. BY
1				
2				
3				
4				
5				

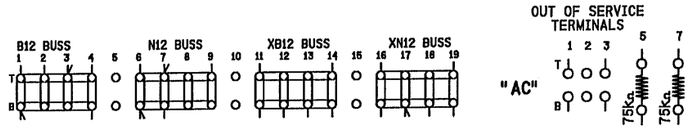

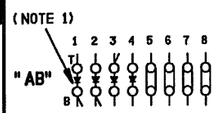

(2 TRACK)
HXP-3R2
2 TRACK CHASSIS
P/N T13667-1
UNIT#1

(2 TRACK)
HXP-3R2
2 TRACK CHASSIS
P/N T13667-1
UNIT#2

HCA-1
HIGHWAY
CROSSING ANALYZER
P/N T13673

SSCC3+
40 AMP
CROSSING
CONTROLLER
91190-0111

NOTE:
1) DENOTES RECTIFIER : (SAFETRAN# 8008A299006)

SIDE "A"

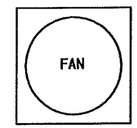

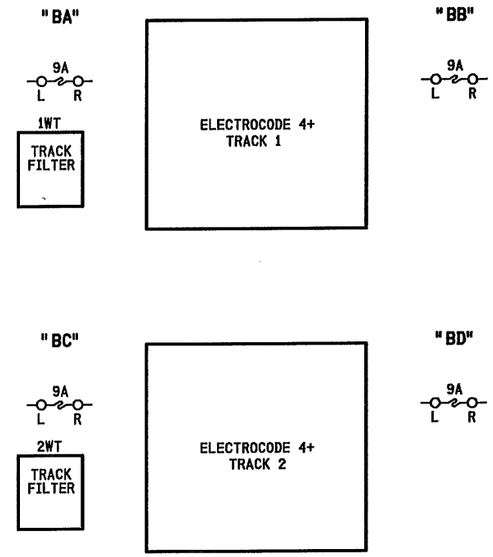

PLAN SHELF

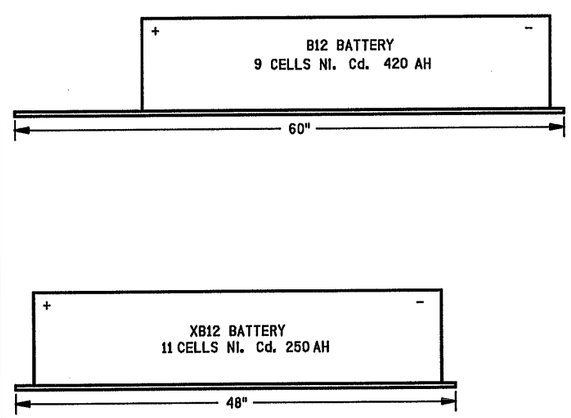

SIDE "B"

PROPOSED
DES. No. _____
RED-IN YELLOW-OUT
AS INSTALLED
DATE _____
BY _____

8' X 10' BUNGALOW

PROPOSED D	PROPOSED M	PROPOSED Y	REVISIONS	D	C	COMPLETED D	COMPLETED M	COMPLETED Y	C

REGION SOUTHERN
SUB. MATTESON 334
CN

SIGNALS AND COMMUNICATIONS HOMEWOOD
19 MAY 2010
DES. MKN
CH. DTB

BUNGALOW LAYOUT
SIDE "A" & "B"
GOUGAR ROAD
MOKENA, IL

MTS-006.00-02

SAFETRAN SYSTEM CORP.
LOUISVILLE DIVISION, LOUISVILLE, KY

mts-006.00-02.dgn
28-MAY-2010

SAFETRAN SYSTEMS CORPORATION

DES. : MKN	DATE: 19/05/10	JOB NO. : JXXE01548	
CKD. : DTB	ISSUE DATE: N/A	EST. NO. :	
DRN. : DL	PLAN NO. :N/A	SHEET 2 OF 19	
P TIME:13:43	P DATE: 28-MAY-2010	CAD ID. :MTS-006.00-02	

$WATERMARK

mts-006.00-03.dgn
28-MAY-2010

REVISIONS				
NO.	DATE	BY	DESCRIPTION	APP. BY
1				
2				
3				
4				
5				

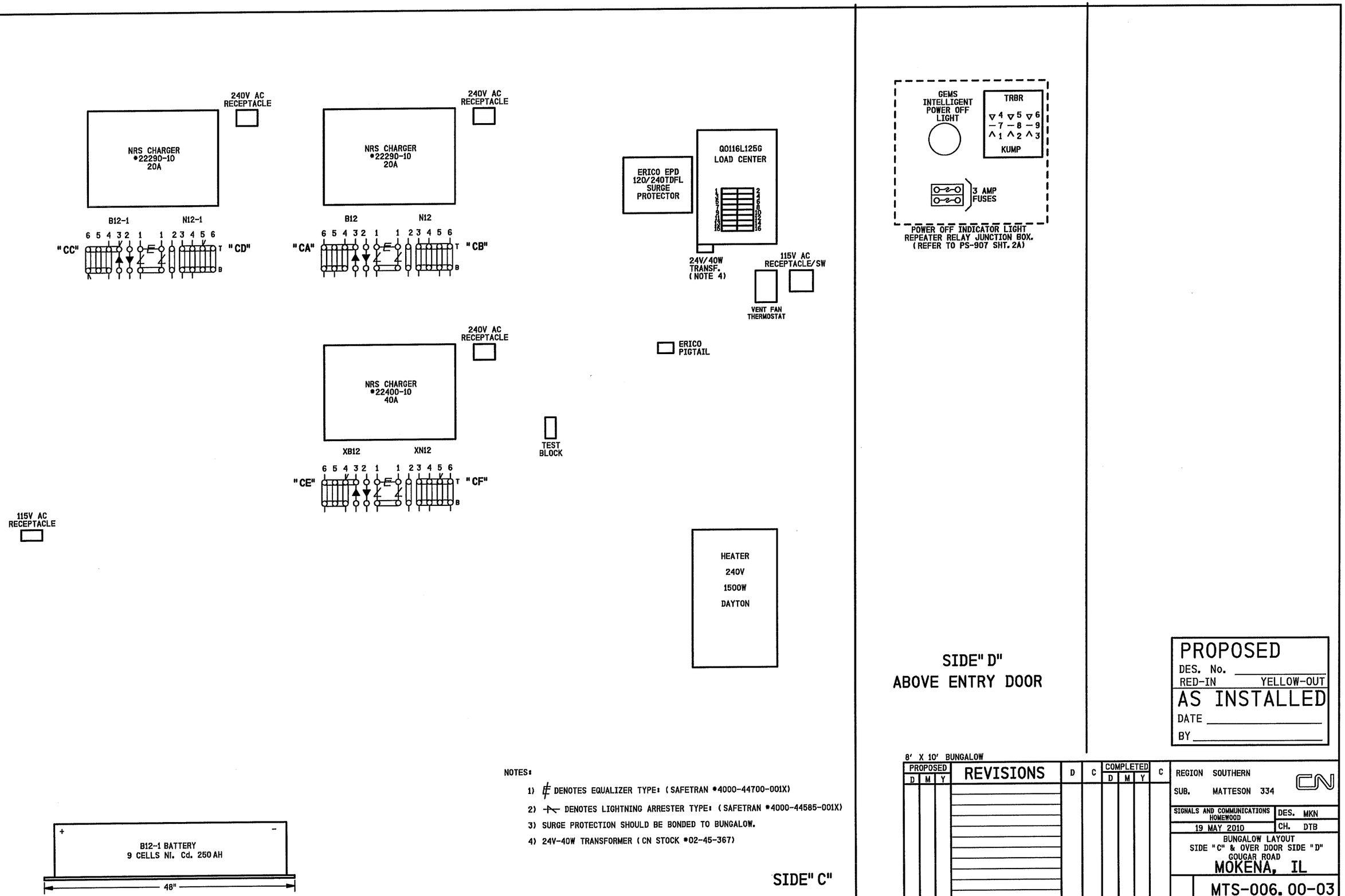

NOTES:

1) # DENOTES EQUALIZER TYPE: (SAFETRAN *4000-44700-001X)
2) DENOTES LIGHTNING ARRESTER TYPE: (SAFETRAN *4000-44585-001X)
3) SURGE PROTECTION SHOULD BE BONDED TO BUNGALOW.
4) 24V-40W TRANSFORMER (CN STOCK *02-45-367)

PROPOSED
DES. No. _____
RED-IN YELLOW-OUT
AS INSTALLED
DATE _____
BY _____

8' X 10' BUNGALOW

PROPOSED D	M	Y	REVISIONS	D	C	COMPLETED D	M	Y	C

REGION SOUTHERN
SUB. MATTESON 334

SIGNALS AND COMMUNICATIONS HOMEWOOD
19 MAY 2010
DES. MKN
CH. DTB

BUNGALOW LAYOUT
SIDE "C" & OVER DOOR SIDE "D"
GOUGAR ROAD
MOKENA, IL

MTS-006.00-03

SAFETRAN SYSTEM CORP.
LOUISVILLE DIVISION, LOUISVILLE, KY

SAFETRAN SYSTEMS CORPORATION

DES. : MKN	DATE: 19/05/10	JOB NO. : JXXE01548	
CKD. : DTB	ISSUE DATE: N/A	EST. NO. :	
DRN. : DL	PLAN NO. : N/A	SHEET 3 OF 19	
P TIME: 13:43	P DATE: 28-MAY-2010	CAD ID. : MTS-006.00-03	

$WATERMARK

REVISIONS				
NO.	DATE	BY	DESCRIPTION	APP. BY
1				
2				
3				
4				
5				

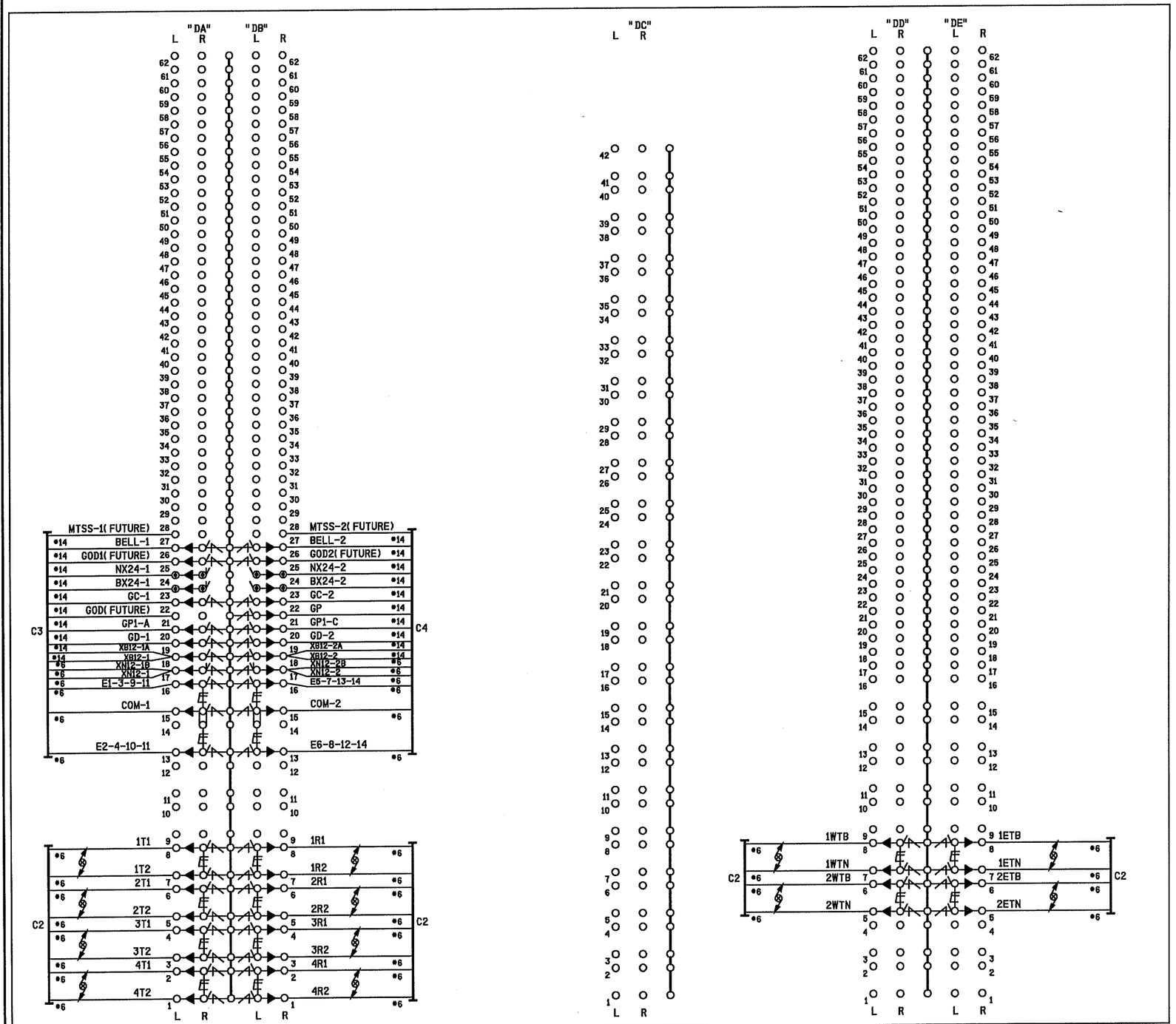

SIDE "D" (INSIDE)

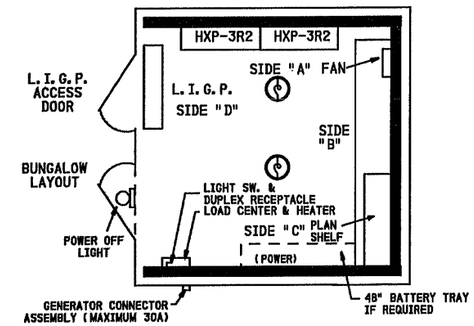

CABLE CONSIST:

C1-3C*6 TECK 90 U/G TO MAIN SERVICE
C2-(12)-2SC*6 TW. TO TRACK
C3-16C (7*6, 9*14) TO GATE (SIG.*1)
C4-16C (7*6, 9*14) TO GATE (SIG.*2)

NOTES:

1) DENOTES LIGHTNING ARRESTER TYPE: (SAFETRAN *4000-44585-001X)
2) DENOTES EQUALIZER TYPE: (SAFETRAN *4000-44700-001X)
3) DENOTES TWISTED PAIR.
4) ENSURE DOUBLE NUTTING OF ALL TERMINALS.
5) ● DENOTES INSULATED TERMINAL

PROPOSED
DES. No. _____
RED-IN YELLOW-OUT
AS INSTALLED
DATE _____
BY _____

8' X 10' BUNGALOW

PROPOSED D	M	Y	REVISIONS	D	C	COMPLETED D	M	Y	C

REGION SOUTHERN
SUB. MATTESON 334

SIGNALS AND COMMUNICATIONS HOMEWOOD
19 MAY 2010
DES. MKN
CH. DTB

BUNGALOW LAYOUT SIDE "D"
LOW IMPEDANCE GROUND PLANE
GOUGAR ROAD
MOKENA, IL

MTS-006. 00-04

SAFETRAN SYSTEM CORP.
LOUISVILLE DIVISION, LOUISVILLE, KY

SAFETRAN SYSTEMS CORPORATION

DES. : MKN	DATE: 19/05/10	JOB NO. : JXXE01548	
CKD. : DTB	ISSUE DATE: N/A	EST. NO. :	
DRN. : DL	PLAN NO. : N/A	SHEET 4 OF 19	
P TIME: 13:43	P DATE: 28-MAY-2010	CAD ID. : MTS-006. 00-04	

mts-006. 00-04. dgn
28-MAY-2010

$WATERMARK

mts-006.00-05.dgn
28-MAY-2010

REVISIONS				
NO.	DATE	BY	DESCRIPTION	APP. BY
1				
2				
3				
4				
5				

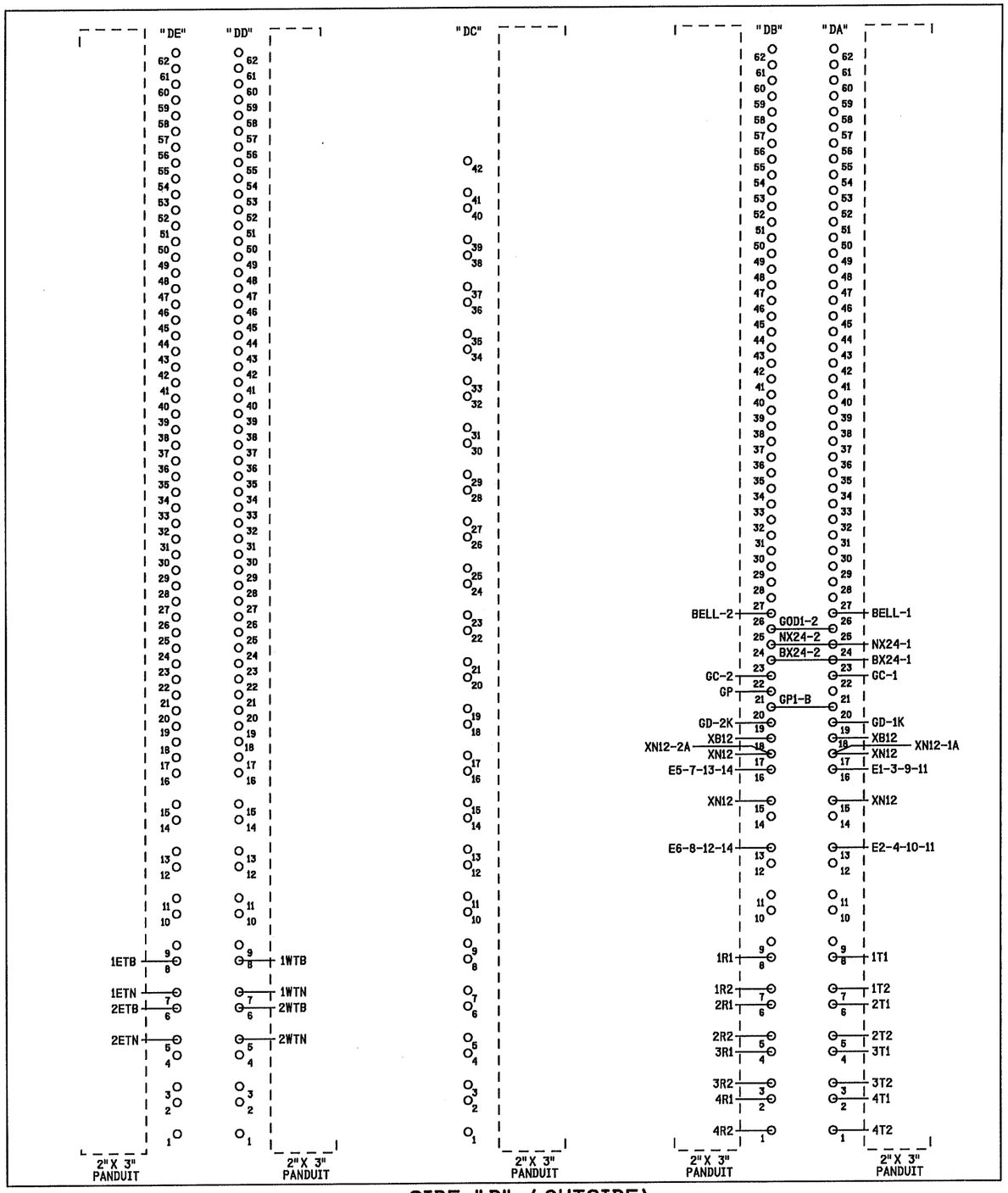

SIDE "D" (OUTSIDE)

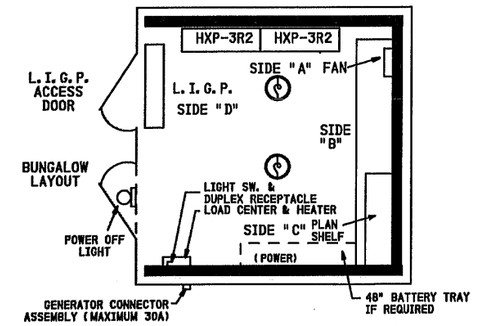

PROPOSED
DES. No. _____
RED-IN YELLOW-OUT
AS INSTALLED
DATE _____
BY _____

8' X 10' BUNGALOW

PROPOSED D	M	Y	REVISIONS	D	C	COMPLETED D	M	Y	C

REGION SOUTHERN
SUB. MATTESON 334

SIGNALS AND COMMUNICATIONS HOMEWOOD
19 MAY 2010
DES. MKN
CH. DTB

BUNGALOW LAYOUT SIDE "D"
LOW IMPEDANCE GROUND PLANE
GOUGAR ROAD
MOKENA, IL

MTS-006.00-05

SAFETRAN SYSTEM CORP.
LOUISVILLE DIVISION, LOUISVILLE, KY

SAFETRAN SYSTEMS CORPORATION

DES. : MKN	DATE: 19/05/10	JOB NO. : JXXE01548	
CKD. : DTB	ISSUE DATE: N/A	EST. NO. :	
DRN. : DL	PLAN NO. :N/A	SHEET 5 OF 19	
P TIME:13:43	P DATE: 28-MAY-2010	CAD ID. :MTS-006.00-05	

$WATERMARK

REVISIONS				
NO.	DATE	BY	DESCRIPTION	APP. BY
1				
2				
3				
4				
5				

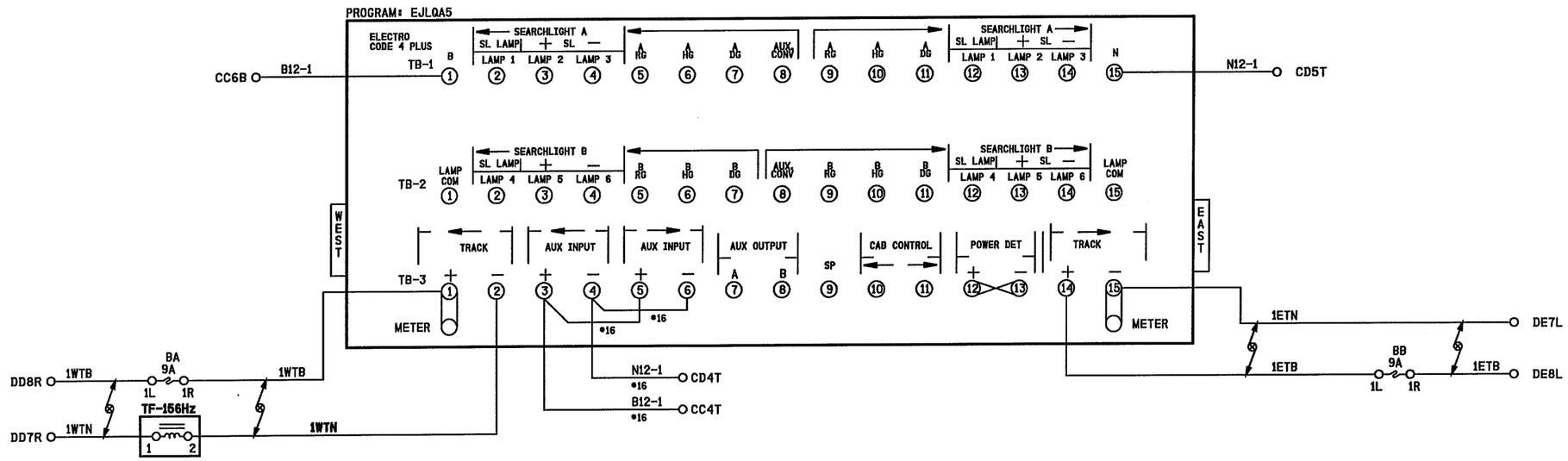

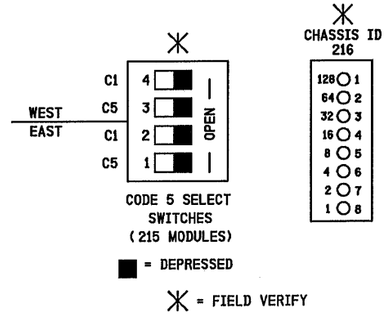

■ = DEPRESSED

✳ = FIELD VERIFY

NOTES:-

1) ALL WIRINGS #10 AWG MINIMUM UNLESS OTHERWISE NOTED. WIRE SIZES SHOWN ARE MINIMUM GAUGE.

2) DENOTES TWISTED PAIR.

3) FIELD TO VERIFY CORRECT ELECTROCODE TRACK LEAD POLARITY

4) FIELD TO VERIFY CODE 5 SELECT SWITCHES POSITION

CONFIG. - A
PROGRAM - EJLQA5
MODULES - 2-2R, 2-7K, 214, 215D, 216DL, 240-PTC A/240 JUMPER B, & 2-9HP

PROPOSED
DES. No. _____
RED-IN YELLOW-OUT
AS INSTALLED
DATE _____
BY _____

8' X 10' BUNGALOW

PROPOSED D	M	Y	REVISIONS	D	C	COMPLETED D	M	Y	C

REGION SOUTHERN
SUB. MATTESON 334
SIGNALS AND COMMUNICATIONS HOMEWOOD
19 MAY 2010
DES. MKN
CH. DTB
EC4+ REPEATER
TRACK 1
GOUGAR ROAD
MOKENA, IL
MTS-006.00-06

SAFETRAN SYSTEM CORP.
LOUISVILLE DIVISION, LOUISVILLE, KY

SAFETRAN SYSTEMS CORPORATION

DES. : MKN	DATE: 19/05/10	JOB NO. : JXXE01548	
CKD. : DTB	ISSUE DATE:	EST. NO. :	
DRN. : DL	PLAN NO. :	SHEET 6 OF 19	
P TIME: 13:43	P DATE: 28-MAY-2010	CAD ID. : MTS-006.00-06	

mts-006.00-06.dgn
28-MAY-2010

$WATERMARK

mts-006.00-07.dgn
28-MAY-2010

REVISIONS				
NO.	DATE	BY	DESCRIPTION	APP. BY
1				
2				
3				
4				
5				

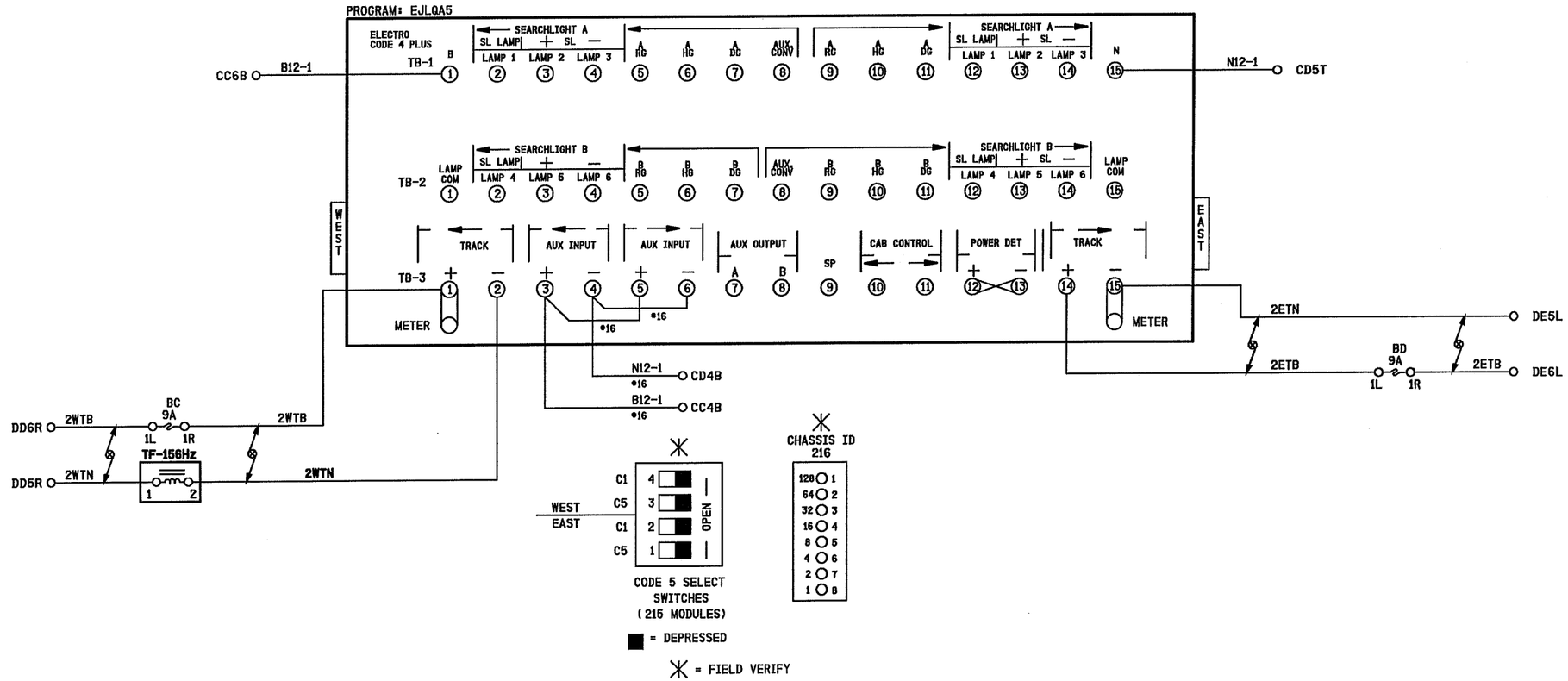

NOTES:-

1) ALL WIRINGS #10 AWG MINIMUM UNLESS OTHERWISE NOTED. WIRE SIZES SHOWN ARE MINIMUM GAUGE.

2) DENOTES TWISTED PAIR.

3) FIELD TO VERIFY CORRECT ELECTROCODE TRACK LEAD POLARITY

4) FIELD TO VERIFY CODE 5 SELECT SWITCHES POSITION

CONFIG. - A
PROGRAM - EJLQA5
MODULES - 2-2R, 2-7K, 214, 215D, 216DL, 240-PTC A/240 JUMPER B, & 2-9HP

PROPOSED
DES. No. _____
RED-IN YELLOW-OUT
AS INSTALLED
DATE _____
BY _____

8' X 10' BUNGALOW

PROPOSED D	M	Y	REVISIONS	D	C	COMPLETED D	M	Y	C

REGION SOUTHERN
SUB. MATTESON 334

SIGNALS AND COMMUNICATIONS HOMEWOOD
19 MAY 2010
DES. MKN
CH. DTB

EC4+ REPEATER
TRACK 2
GOUGAR ROAD
MOKENA, IL

MTS-006.00-07

SAFETRAN SYSTEM CORP.
LOUISVILLE DIVISION, LOUISVILLE, KY

SAFETRAN SYSTEMS CORPORATION

DES. : MKN	DATE: 19/05/10	JOB NO. : JXXE01548	
CKD. : DTB	ISSUE DATE:	EST. NO. :	
DRN. : DL	PLAN NO. :	SHEET 7 OF 19	
P TIME: 13:44	P DATE: 28-MAY-2010	CAD ID. : MTS-006.00-07	

$WATERMARK

REVISIONS				
NO.	DATE	BY	DESCRIPTION	APP. BY
1				
2				
3				
4				
5				

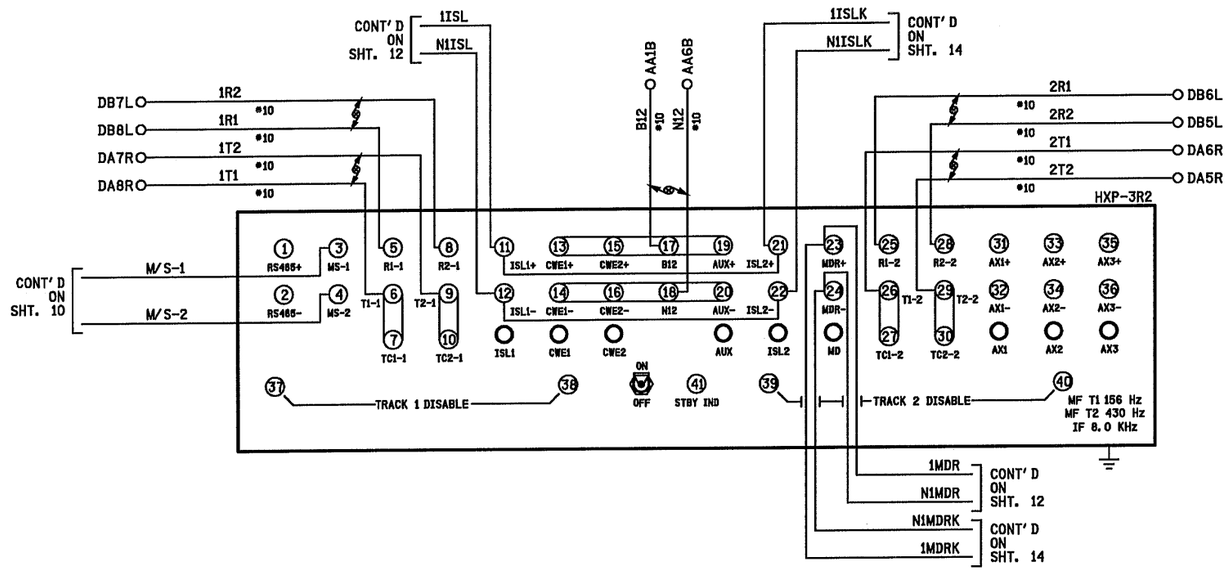

PROPOSED
DES. No. _____
RED-IN YELLOW-OUT
AS INSTALLED
DATE _____
BY _____

NOTES:

1) ALL WIRING #16 AWG UNLESS OTHERWISE NOTED.

2) DENOTES TWISTED PAIR.

8' X 10' BUNGALOW

PROPOSED D	PROPOSED M	PROPOSED Y	REVISIONS	D	C	COMPLETED D	COMPLETED M	COMPLETED Y	C

REGION SOUTHERN
SUB. MATTESON 334
CN

SIGNALS AND COMMUNICATIONS HOMEWOOD
19 MAY 2010
DES. MKN
CH. DTB

HXP-3R2 UNIT #1
TRACKS 1 & 2 CONNECTIONS
GOUGAR ROAD
MOKENA, IL

MTS-006.00-08

SAFETRAN SYSTEM CORP.
LOUISVILLE DIVISION, LOUISVILLE, KY

SAFETRAN SYSTEMS CORPORATION		
DES.: MKN	DATE: 19/05/10	JOB NO.: JXXE01548
CKD.: DTB	ISSUE DATE: N/A	EST. NO.: N/A
DRN.: DL	PLAN NO.: N/A	SHEET 8 OF 19
P TIME: 13:44	P DATE: 28-MAY-2010	CAD ID.: MTS-006.00-08

mts-006.00-08.dgn
28-MAY-2010

$WATERMARK

REVISIONS			
NO.	DATE	BY	DESCRIPTION	APP. BY
1				
2				
3				
4				
5				

Grade Crossing Location Record

Cabinet Number (Option 90): 8025

Location: GOUGAR ROAD Milepost: 6.00 DOT: 260 611F Date: / /

Operating Program HPN: HXP-3/PMD-3 Version: 42.0

System Monitor Program HPN: HXP-3R2 Version: 20.2

Hardware Settings

Track 1 Master [X] Slave [ ] 4 kHz [ ] 8 kHz [X]
LOS jumper 0 [ ] 1 [X] 2 [ ] Fault jumper 0 [X] 1 [ ]
Approach configuration switch position: Normal [X] Short [ ] Very Short [ ]

Track 2 Master [X] Slave [ ] 4 kHz [ ] 8 kHz [ ]
LOS jumper 0 [ ] 1 [ ] 2 [ ] Fault jumper 0 [ ] 1 [ ]
Approach configuration switch position: Normal [X] Short [ ] Very Short [ ]

Adjust Select Adjustments

No.	Adjustment	Default	Range	Track 1	Track 2
1	Approach Length	9,999	0 - 9,999	2310 feet	2310 feet
2	Warning Time	99	23 - 99	30 seconds	30 seconds
3	LIA	0	-9 to +9	steps	steps
4	TC (1 step = 32)	395	430 - 470	steps	steps
5	MD Restart	99%	0 - 99%	RX	RX

Option Adjustments

No.	Adjustment	Default	Range	Track 1	Track 2
0	RX	0	1-100		
1	TK-ENA	UP	UP or dn	UP [X] dn [ ]	UP [X] dn [ ]
2	TK FO	0	0 - 9999	156 Hz	430 Hz
3	CW/MD	d	C to d	C [X] d [ ]	C [X] d [ ]
4	UNI-BI	b	U - b	U [X] b [ ]	U [X] b [ ]
5	NBS-C	0	0 - 99	RX	RX
		9,999	RX dependant	feet	feet
6	CWEWT	80	0 - 99	80 seconds	80 seconds
7	LOS	16	4 - 99	30 seconds	30 seconds
8	IJ-LOS	5	3 - 99	5 seconds	5 seconds
9	BC	frequency dependant	50 -250		
10	P-COMP	0	0 - 10	degrees	degrees

HXP-3, HXP-3R, HXP-3R2

AX Adjustment Options NOTE: NO AX DRIVE IS USED AT THIS LOCATION

	Default	Range	Option 11 - AX1	Option 12 - AX2	Option 13 - AX3
TK-ASN		1, 2, Both	1 [ ] 2 [ ] Both [ ]	1 [ ] 2 [ ] Both [ ]	1 [ ] 2 [ ] Both [ ]
OF-TK1	0	0 - 9,999	feet	feet	feet
OF-TK2	0	0 - 9,999	feet	feet	feet
WT	99	23 - 99	seconds	seconds	seconds
MD-RST	99	0 - 99%	RX	RX	RX
CW/MD	d	C or d	C [ ] d [ ]	C [ ] d [ ]	C [ ] d [ ]
CJ-LOS	0	3 - 99	5 seconds	seconds	seconds
PJ-DET	15	4 - 15	15 seconds	seconds	seconds
POS-ST	dn	UP or dn	UP [ ] dn [ ]	UP [ ] dn [ ]	UP [ ] dn [ ]

No.	Adjustment	Default	Range	Track 1	Track 2
17	MDR-AX	n*	n or A	n [X] A [ ]	n [X] A [ ]
	OF-TK1	0	0 - 9,999	0 feet	
	OF-TK2	0	0 - 9,999		feet
	CJ-LOS	0	3 - 99	0 seconds	seconds
	PJ-DET	15	4 - 15	15 seconds	seconds
18	MD-TMR	10	10-99 (0=disable)	10 minutes	minutes
19	MIN-WT	0	23-99 (0=disable)	0 seconds	seconds
20	FS-DET	0	10-30 (0=disable)	0 minutes	minutes
21	POS-RX	0	0 - 74 (0=disable)	0 RX	RX
	POS-TM	0	0 - 99**	0 minutes	minutes
22	AR-TMR	0	0-80 (0=disable)	0 minutes	minutes
47	ATO-RX	dn	UP or dn	UP [ ] dn [X]	UP [ ] dn [X]
48	PF-ENA	UP	UP or dn	UP [X] dn [ ]	UP [X] dn [ ]

***n = not an AX drive (no options available)**
****0 = disable, 99 = continuous**

Shunt Record

West Approach		No Shunt RX	No Shunt Phase	100% Shunt RX	100% Shunt Phase	50% Shunt	50% Shunt RX	50% Shunt Phase	LIA Added % 1 to 9
Track 1	Normal								
	Standby								
Track 2	Normal								
	Standby								
East Approach									
Track 1	Normal								
	Standby								
Track 2	Normal								
	Standby								

PROPOSED
DES. No.
RED-IN YELLOW-OUT
AS INSTALLED
DATE
BY

8' X 10' BUNGALOW

PROPOSED D	M	Y	REVISIONS	D	C	COMPLETED D	M	Y	C

REGION SOUTHERN
SUB. MATTESON 334
SIGNALS AND COMMUNICATIONS HOMEWOOD
19 MAY 2010
DES. MKN
CH. DTB
HXP-3R2 #1
PROGRAM CONFIGURATION
GOUGAR ROAD
MOKENA, IL
MTS-006.00-09

SAFETRAN SYSTEM CORP.
LOUISVILLE DIVISION, LOUISVILLE, KY

SAFETRAN SYSTEMS CORPORATION
DES. : MKN DATE: 19/05/10 JOB NO. : JXXE01548
CKD. : DTB ISSUE DATE: N/A EST. NO. : N/A
DRN. : DL PLAN NO. : N/A SHEET 9 OF 19
P TIME: 13:44 P DATE: 28-MAY-2010 CAD ID. : MTS-006.00-09

mts-006.00-09.dgn
28-MAY-2010

$WATERMARK

mts-006.00-10.dgn
28-MAY-2010

REVISIONS				
NO.	DATE	BY	DESCRIPTION	APP. BY
1				
2				
3				
4				
5				

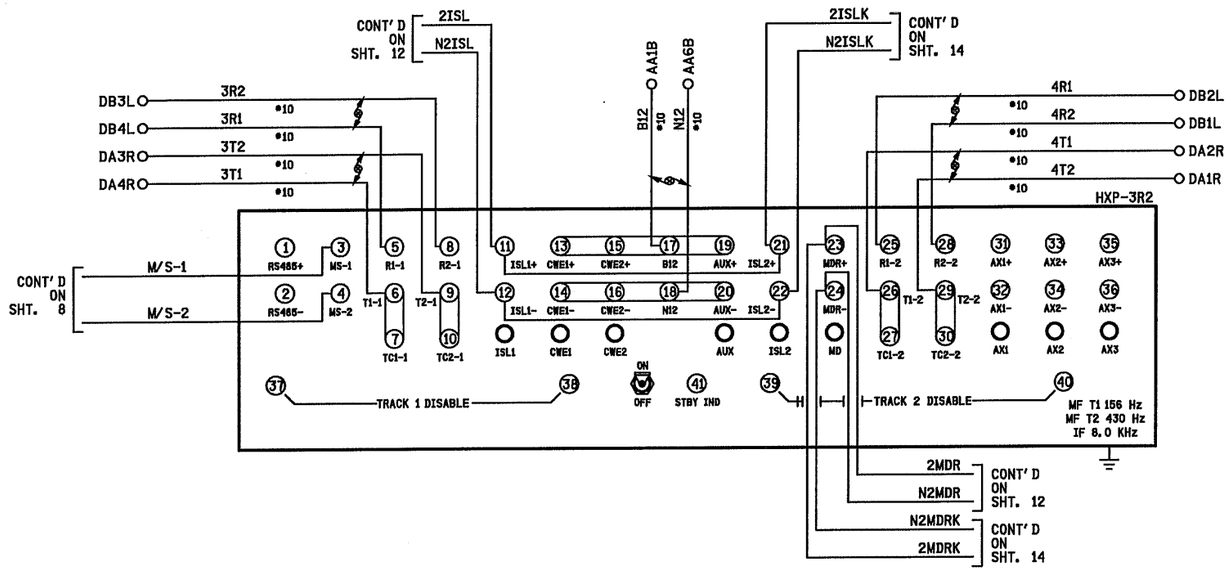

PROPOSED
DES. No. _____
RED-IN YELLOW-OUT
AS INSTALLED
DATE _____
BY _____

NOTES:

1) ALL WIRING #16 AWG UNLESS OTHERWISE NOTED.

2) DENOTES TWISTED PAIR.

8' X 10' BUNGALOW

PROPOSED D	PROPOSED M	PROPOSED Y	REVISIONS	D	C	COMPLETED D	COMPLETED M	COMPLETED Y	C

REGION SOUTHERN
SUB. MATTESON 334

SIGNALS AND COMMUNICATIONS HOMEWOOD
19 MAY 2010
DES. MKN
CH. DTB

HXP-3R2 UNIT #2
TRACKS 3 & 4 CONNECTIONS
GOUGAR ROAD
MOKENA, IL

MTS-006.00-10

SAFETRAN SYSTEM CORP.
LOUISVILLE DIVISION, LOUISVILLE, KY

SAFETRAN SYSTEMS CORPORATION		
DES. : MKN	DATE: 19/05/10	JOB NO. :JXXE01548
CKD. : DTB	ISSUE DATE: N/A	EST. NO. :N/A
DRN. : DL	PLAN NO. :N/A	SHEET 10 OF 19
P TIME:13:44	P DATE: 28-MAY-2010	CAD ID. :MTS-006.00-10

$WATERMARK

REVISIONS				
NO.	DATE	BY	DESCRIPTION	APP. BY
1				
2				
3				
4				
5				

Grade Crossing Location Record

Cabinet Number (Option 90): 8025

Location: GOUGAR ROAD Milepost: 6.00 DOT: 260 611F Date: / /

Operating Program HPN: HXP-3/PMD-3 Version: 42.0

System Monitor Program HPN: HXP-3R2 Version: 20.2

Hardware Settings

Track 1 Master ☐ Slave ☒ 4 kHz ☐ 8 kHz ☒
LOS Jumper 0 ☐ 1 ☒ 2 ☐ Fault Jumper 0 ☒ 1 ☐
Approach configuration switch position: Normal ☒ Short ☐ Very Short ☐

Track 2 Master ☐ Slave ☒ 4 kHz ☐ 8 kHz ☐
LOS Jumper 0 ☐ 1 ☐ 2 ☐ Fault Jumper 0 ☐ 1 ☐
Approach configuration switch position: Normal ☒ Short ☐ Very Short ☐

Adjust Select Adjustments

No.	Adjustment	Default	Range	Track 1	Track 2
1	Approach Length	9,999	0 - 9,999	2310 feet	2310 feet
2	Warning Time	99	23 - 99	30 seconds	30 seconds
3	LIA	0	-9 to +9	steps	steps
4	TC (1 step = 32)	395	430 - 470	steps	steps
5	MD Restart	99%	0 - 99%	RX	RX

Option Adjustments

No.	Adjustment	Default	Range	Track 1	Track 2
0	RX	0	1-100		
1	TK-ENA	UP	UP or dn	UP ☒ dn ☐	UP ☒ dn ☐
2	TK FO	0	0 - 9999	156 Hz	430 Hz
3	CW/MD	d	C to d	C ☒ d ☐	C ☒ d ☐
4	UNI-BI	b	U - b	U ☒ b ☐	U ☒ b ☐
5	NBS-C	0	0 - 99	RX	RX
		9,999	RX dependant	feet	feet
6	CWEWT	80	0 - 99	80 seconds	80 seconds
7	LOS	16	4 - 99	30 seconds	30 seconds
8	IJ-LOS	5	3 - 99	5 seconds	5 seconds
9	BC	frequency dependant	50 -250		
10	P-COMP	0	0 - 10	degrees	degrees

HXP-3, HXP-3R, HXP-3R2

AX Adjustment Options NOTE: NO AX DRIVE IS USED AT THIS LOCATION

	Default	Range	Option 11 - AX1	Option 12 - AX2	Option 13 - AX3
TK-ASN		1, 2, Both	1 ☐ 2 ☐ Both ☐	1 ☐ 2 ☐ Both ☐	1 ☐ 2 ☐ Both ☐
OF-TK1	0	0 - 9,999	feet	feet	feet
OF-TK2	0	0 - 9,999	feet	feet	feet
WT	99	23 - 99	seconds	seconds	seconds
MD-RST	99	0 - 99%	RX	RX	RX
CW/MD	d	C or d	C ☐ d ☐	C ☐ d ☐	C ☐ d ☐
CJ-LOS	0	3 - 99	seconds	seconds	seconds
PJ-DET	15	4 - 15	seconds	seconds	seconds
POS-ST	dn	UP or dn	UP ☐ dn ☐	UP ☐ dn ☐	UP ☐ dn ☐

No.	Adjustment	Default	Range	Track 1	Track 2
17	MDR-AX	n*	n or A	n ☒ A ☐	n ☒ A ☐
	OF-TK1	0	0 - 9,999	0 feet	
	OF-TK2	0	0 - 9,999		feet
	CJ-LOS	0	3 - 99	0 seconds	seconds
	PJ-DET	15	4 - 15	15 seconds	seconds
18	MD-TMR	10	10-99 (0=disable)	10 minutes	minutes
19	MIN-WT	0	23-99 (0=disable)	0 seconds	seconds
20	FS-DET	0	10-30 (0=disable)	0 minutes	minutes
21	POS-RX	0	0 - 74 (0=disable)	0 RX	RX
	POS-TM	0	0 - 99**	0 minutes	minutes
22	AR-TMR	0	0-80 (0=disable)	0 minutes	minutes
47	ATO-RX	dn	UP or dn	UP ☐ dn ☒	UP ☐ dn ☒
48	PF-ENA	UP	UP or dn	UP ☒ dn ☐	UP ☒ dn ☐

***n = not an AX drive (no options available**
****0 = disable, 99 = continuous**

Shunt Record

West Approach		No Shunt RX	No Shunt Phase	100% Shunt RX	100% Shunt Phase	50% Shunt	50% Shunt RX	50% Shunt Phase	LIA Added % 1 to 9
Track 1	Normal								
	Standby								
Track 2	Normal								
	Standby								
East Approach									
Track 1	Normal								
	Standby								
Track 2	Normal								
	Standby								

PROPOSED
DES. No. _____
RED-IN YELLOW-OUT
AS INSTALLED
DATE _____
BY _____

8' X 10' BUNGALOW

PROPOSED D	M	Y	REVISIONS	D	C	COMPLETED D	M	Y	C

REGION SOUTHERN
SUB. MATTESON 334
SIGNALS AND COMMUNICATIONS HOMEWOOD
19 MAY 2010
DES. MKN
CH. DTB
HXP-3R2 #2
PROGRAM CONFIGURATION
GOUGAR ROAD
MOKENA, IL
MTS-006.00-11

SAFETRAN SYSTEM CORP.
LOUISVILLE DIVISION, LOUISVILLE, KY

SAFETRAN SYSTEMS CORPORATION
DES. : MKN DATE: 19/05/10 JOB NO. : JXXED1548
CKD. : DTB ISSUE DATE: N/A EST. NO. :N/A
DRN. : DL PLAN NO. :N/A SHEET 11 OF 19
P TIME:13:44 P DATE: 28-MAY-2010 CAD ID. :MTS-006.00-11

mts-006.00-11.dgn
28-MAY-2010

$WATERMARK

mts-006.00-12.dgn
28-MAY-2010

REVISIONS				
NO.	DATE	BY	DESCRIPTION	APP. BY
1				
2				
3				
4				
5				

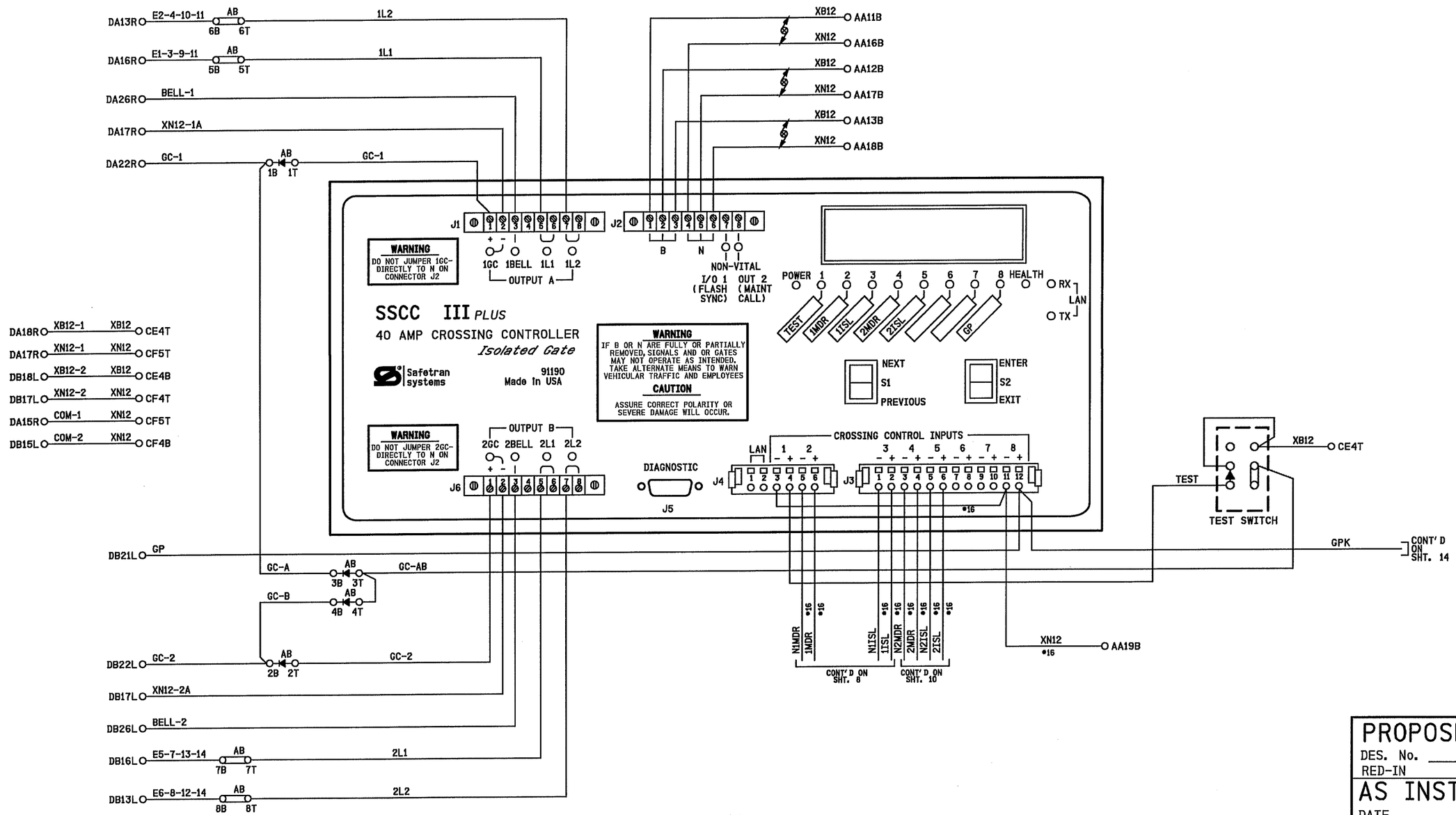

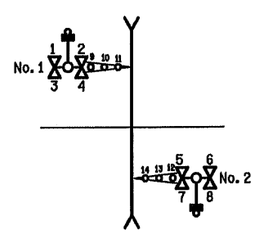

NOTES:

1) DENOTES RECTIFIER : (SAFETRAN #8008A299006)

2) DENOTES TWISTED PAIR.

3) ALL WIRING TO BE #10 AWG MINIMUM UNLESS OTHERWISE NOTED.

PROPOSED
DES. No. _____
RED-IN YELLOW-OUT
AS INSTALLED
DATE _____
BY _____

8' X 10' BUNGALOW

PROPOSED D	PROPOSED M	PROPOSED Y	REVISIONS	D	C	COMPLETED D	COMPLETED M	COMPLETED Y	C

REGION SOUTHERN
SUB. MATTESON 334

SIGNALS AND COMMUNICATIONS HOMEWOOD
19 MAY 2010
DES. MKN
CH. DTB

SSCC3+ WITH ISOLATED GATE
CROSSING CONTROLLER 40AMP
GOUGAR ROAD
MOKENA, IL

MTS-006.00-12

SAFETRAN SYSTEM CORP.
LOUISVILLE DIVISION, LOUISVILLE, KY

SAFETRAN SYSTEMS CORPORATION			
DES. : MKN	DATE: 19/05/10	JOB NO. : JXXE01548	
CKD. : DTB	ISSUE DATE: N/A	EST. NO. : N/A	
DRN. : DL	PLAN NO. : N/A	SHEET 12 OF 19	
P TIME: 13:44	P DATE: 28-MAY-2010	CAD ID. : MTS-006.00-12	

$WATERMARK

mts-006.00-13.dgn
28-MAY-2010

REVISIONS			
NO.	DATE	BY	DESCRIPTION	APP. BY
1				
2				
3				
4				
5				

CROSSING CONTROLLER SSCCIII+ 40-AMPERE UNIT, 91190

PROGRAM	NOTES	INITIAL SETTING BY: _____ DATE: _____
FLASH RATE:	30-70 FLASHES/MINUTE DEFAULT = 50	60 FLASHES/MINUTE
GATES USED:	YES/NO DEFAULT = YES	☑ YES ☐ NO
1 GC DELAY:	3-20 SEC., DEFAULT = 4	4 SECONDS
2 GC DELAY (40 AMP UNIT):	3-20 SEC., DEFAULT = 4	4 SECONDS
GATE RISING BELL:	ON/OFF, DEFAULT = ON	☐ ON ☑ OFF
ENABLED INPUTS:	1 THRU 7 ONLY	☑1 ☑2 ☑3 ☑4 ☑5 ☐6 ☐7
GC2/I7:	GC2 NORMAL, I7 = NORMAL GC2 INVERTED, I7 = NORMAL GC2 PRMT RELAY, I7 = PRMT HEALTH GC2 BEACONFDBK	☑ NORMAL ☐ INVERTED ☐ PRE-EMPT SIM ☐ PRE-EMPT ADV ☐ BEACON
INPUT 7	INPUT, PRMT HLTH, TEST SW	☐ IN ☐ HEALTH ☐ TEST SW
TEST SW 2TRKDSTK ONLY	ACTIVATE, ACT & STICK RELEASE	☐ ACTIVATE ☐ ACT & REL
ADV PRE-EMPT TIME (40A):	1-99 SEC., DEFAULT = 1	N/A SECONDS
MIN ACTIVATION TIME:	0-99 SEC., DEFAULT = 20	25 SECONDS
STICK RELEASE TIME:	5-120 MIN., DEFAULT = 15	N/A MINUTES
BEACON PICK-UP DELAY	5-600 SEC., DEFAULT = 20	N/A SECONDS
SUP ISLAND TIME:	5-20 MIN., DEFAULT = 20	N/A MINUTES
ENABLED OUTPUTS: (40 amp only)	DEFAULT = A + B	☑ A + B ☐ A ☐ B
DAYLIGHT SAVINGS:	DEFAULT = DISABLED	☑ ENABLED ☐ DISABLED
DATE:	N/A	☐ DATE SET
TIME:	24-FORMAT	☐ TIME SET
PASSWORD:	DEFAULT = DISABLED	☐ ENABLED ☑ DISABLED
CONFIGURE		
LOS TIMERS:	0-20 SECONDS, INPUTS 1-7 ONLY DEFAULT = 0	1: 0 SEC 5: 0 SEC 2: 0 SEC 6: 0 SEC 3: 0 SEC 7: 0 SEC 4: 0 SEC
MCF:		MCF: BASICPLS CRC: _____
ATCS ADDRESS:	DEFAULT = 700000000000	
LOW BATTERY:	9.0-15.0 VOLTS, OR DISABLED DEFAULT = DISABLED	☑ DISABLED ☐ ENABLED _____ VOLTS
AUX I/O:	DEFAULT = NONVITAL OUTPUT	☑ NV OUTPUT ☐ FLASH SYNC IN ☐ FLASH SYNC OUT
DETECT LAMP NEUTRAL WIRE	DEFAULT = YES	☐ YES ☑ NO
TEST CONFIGURE		
LAMP TEST CANCEL TIMER:	1-15 MINUTES, DEFAULT = 5	5 MINUTES
LAMP TEST DELAY TIMER:	30-120 SEC., DEFAULT = 30	30 SEC.
LAMP TEST ON TIMER:	15-60 SEC., DEFAULT = 15	15 SEC.

STANDARD SETUP LAMP VOLTAGES PROCEDURE
USING TRUE RMS AC+DC METER, OR CONVERSION TABLE BELOW

SETUP LAMP VOLTAGES	INITIAL SETTINGS BY: _____ DATE: _____ METER: _____
FAR GATE	1 L1 = _____ VOLTS 1 L2 = _____ VOLTS 2 L1 = _____ VOLTS 2 L2 = _____ VOLTS
SSCCIII+	1 L1 = _____ VOLTS 1 L2 = _____ VOLTS 2 L1 = _____ VOLTS 2 L2 = _____ VOLTS
NEAR GATE	1 L1 = _____ VOLTS 1 L2 = _____ VOLTS 2 L1 = _____ VOLTS 2 L2 = _____ VOLTS

MULTIMETER READING VARIANCE FROM ACTUAL LAMP VOLTAGE

BATTERY BANK VOLTAGE	VALID LAMP OUTPUT RANGE (in volts)	DIGITAL METER (FLUKE 87 OR EQUIVALENT)	ANALOG METER (SIMPSON 260 OR TS111)
13.3	9.0 TO 12.0	1.3 VOLTS BELOW ACTUAL VALUE	0.6 VOLTS BELOW ACTUAL VALUE
14.7	9.0 TO 12.0	2.2 VOLTS BELOW ACTUAL VALUE	1.1 VOLTS BELOW ACTUAL VALUE
15.8	9.0 TO 12.0	2.6 VOLTS BELOW ACTUAL VALUE	2.0 VOLTS BELOW ACTUAL VALUE

FOR LAMP OUTPUT SETTINGS GREATER THAN 12.0 VOLTS, REDUCE THE LISTED VALUES BY 30%
LAMP VOLTAGE MEASUREMENTS SHOULD BE ACCURATE TO 0.3 VOLTS.

SOFTWARE VERSION: 9V546-A01.K

PROPOSED
DES. No. _____
RED-IN YELLOW-OUT
AS INSTALLED
DATE _____
BY _____

8' X 10' BUNGALOW

PROPOSED D	M	Y	REVISIONS	D	C	COMPLETED D	M	Y	C

REGION SOUTHERN
SUB. MATTESON 334
CN

SIGNALS AND COMMUNICATIONS HOMEWOOD
19 MAY 2010
DES. MKN
CH. DTB

SSCCIII+
PROGRAM DATA
GOUGAR ROAD
MOKENA, IL

MTS-006.00-13

SAFETRAN SYSTEM CORP.
LOUISVILLE DIVISION, LOUISVILLE, KY

SAFETRAN SYSTEMS CORPORATION

DES. : MKN	DATE: 19/05/10	JOB NO. :JXXE01548
CKD. : DTB	ISSUE DATE: N/A	EST. NO. :N/A
DRN. : DL	PLAN NO. :N/A	SHEET 13 OF 19
P TIME:13:44	P DATE: 28-MAY-2010	CAD ID. :MTS-006.00-13

$WATERMARK

mts-006.00-14.dgn
28-MAY-2010

REVISIONS				
NO.	DATE	BY	DESCRIPTION	APP. BY
1				
2				
3				
4				
5				

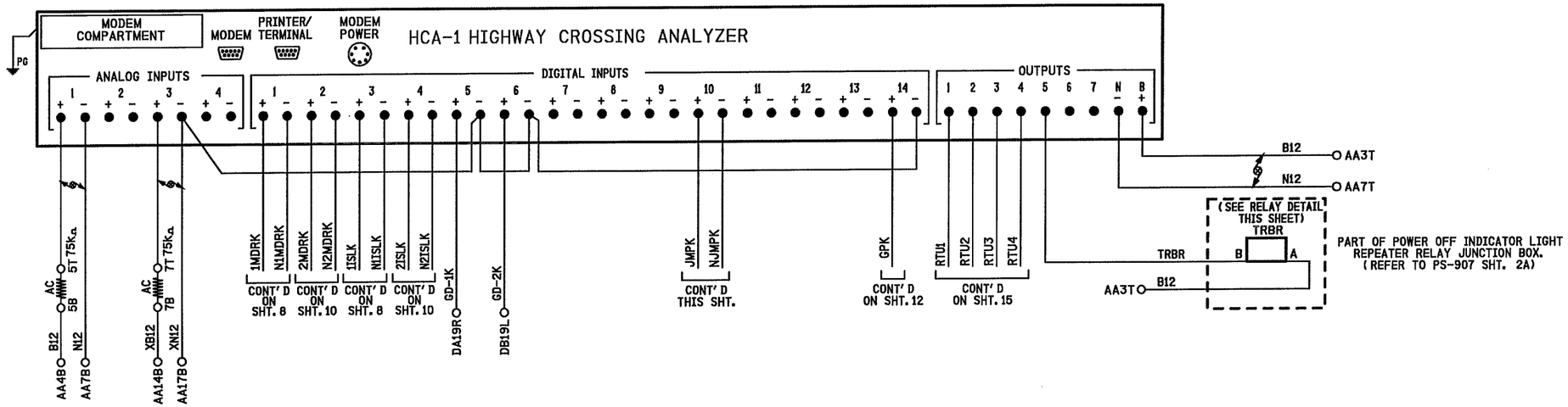

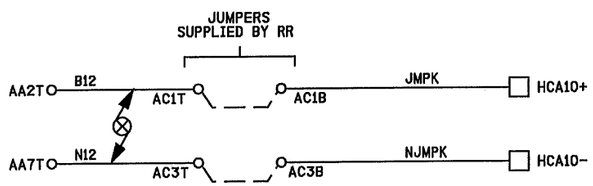

RELAY DETAIL

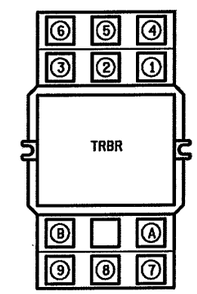

LOCATED OVER ENTRY DOOR

RELAY - POTTER & BRUMFIELD
MODEL KUMP-14D18-12 SOCKET MOUNTABLE
12 VDC W/ 3 FORM C CONTACTS.

SOCKET - SCREW TERMINAL
MODEL 27E121.

RELAY WIRING DIAGRAM (REAR VIEW)

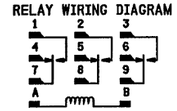

NOTE:
SOCKET NUMBERING CORRESPONDS DIRECTLY WITH RELAY NUMBERING.
(COIL SHOWN ENERGIZED)

NOTES:

1. ALL WIRING ON THIS SHEET TO BE #16 UNLESS OTHERWISE NOTED.
2. DENOTES TWISTED PAIR.

PROPOSED
DES. No. _____
RED-IN YELLOW-OUT
AS INSTALLED
DATE _____
BY _____

8' X 10' BUNGALOW

PROPOSED D	M	Y	REVISIONS	D	C	COMPLETED D	M	Y	C

REGION SOUTHERN
SUB. MATTESON 334

SIGNALS AND COMMUNICATIONS HOMEWOOD
19 MAY 2010
DES. MKN
CH. DTB

HIGHWAY CROSSING ANALYZER
HCA-1
GOUGAR ROAD
MOKENA, IL

MTS-006.00-14

SAFETRAN SYSTEM CORP.
LOUISVILLE DIVISION, LOUISVILLE, KY

SAFETRAN SYSTEMS CORPORATION			
DES. : MKN	DATE: 19/05/10	JOB NO. : JXXE0154B	
CKD. : DTB	ISSUE DATE: N/A	EST. NO. : N/A	
DRN. : DL	PLAN NO. : N/A	SHEET 14 OF 19	
P TIME: 13:44	P DATE: 28-MAY-2010	CAD ID. : MTS-006.00-14	

$WATERMARK

mts-006.00-15.dgn
28-MAY-2010

REVISIONS				
NO.	DATE	BY	DESCRIPTION	APP. BY
1				
2				
3				
4				
5				

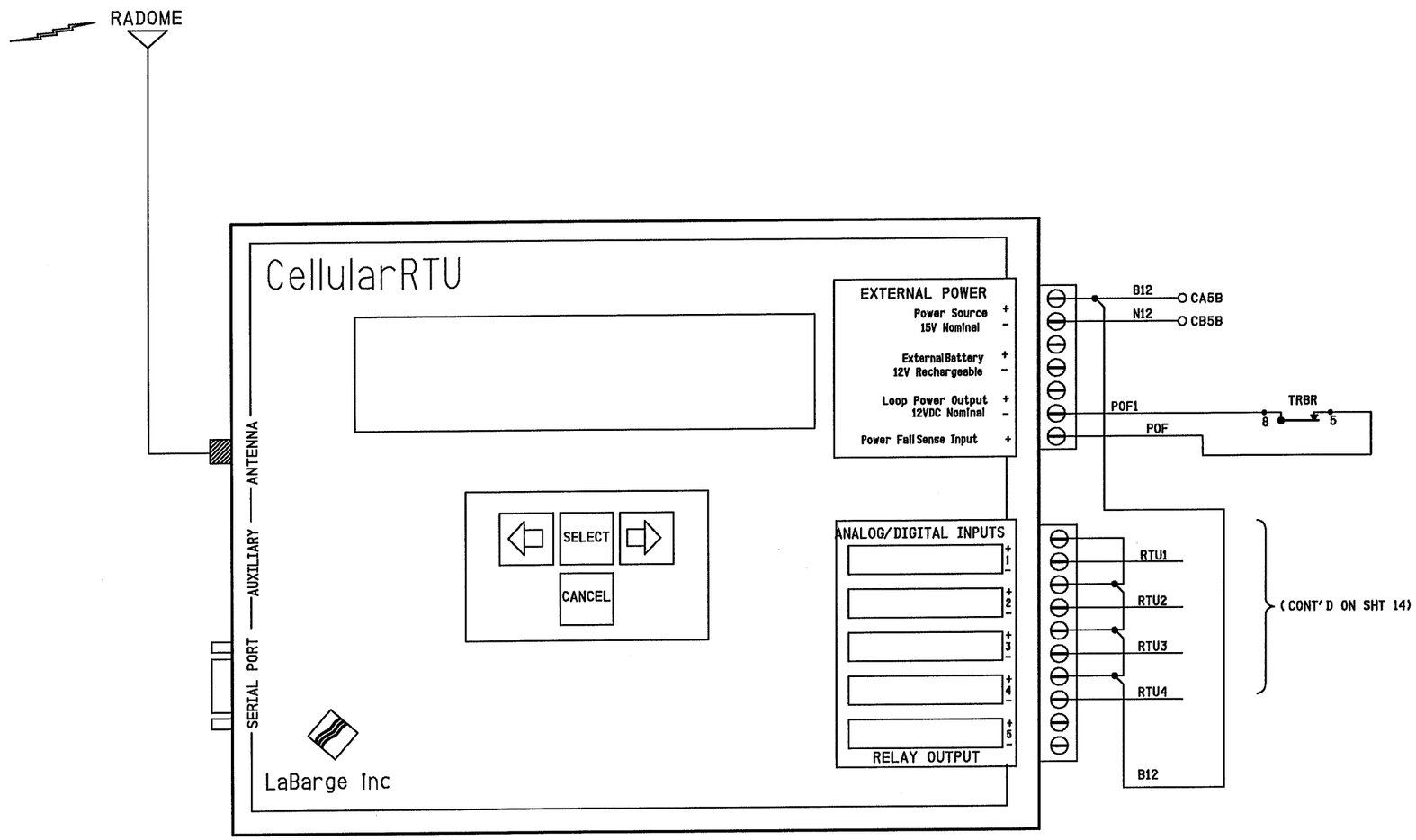

PROPOSED
DES. No. _____
RED-IN YELLOW-OUT
AS INSTALLED
DATE _____
BY _____

8' X 10' BUNGALOW

PROPOSED D	M	Y	REVISIONS	D	C	COMPLETED D	M	Y	C

REGION SOUTHERN
SUB. MATTESON 334
CN

SIGNALS AND COMMUNICATIONS HOMEWOOD
19 MAY 2010
DES. MKN
CH. DTB

RTU CIRCUITS

GOUGAR ROAD
MOKENA, IL

MTS-006.00-15

SAFETRAN SYSTEM CORP.
LOUISVILLE DIVISION, LOUISVILLE, KY

SAFETRAN SYSTEMS CORPORATION	
DES. : MKN	DATE: 19/05/10
CKD. : DTB	ISSUE DATE: N/A
DRN. : DL	PLAN NO. :N/A
P TIME:13:44	P DATE: 28-MAY-2010
JOB NO. : JXXE01548	
EST. NO. :N/A	
SHEET 15 OF 19	
CAD ID. : MTS-006.00-15	

$WATERMARK

mts-006.00-16.dgn
29-MAY-2010

REVISIONS				
NO.	DATE	BY	DESCRIPTION	APP. BY
1				
2				
3				
4				
5				

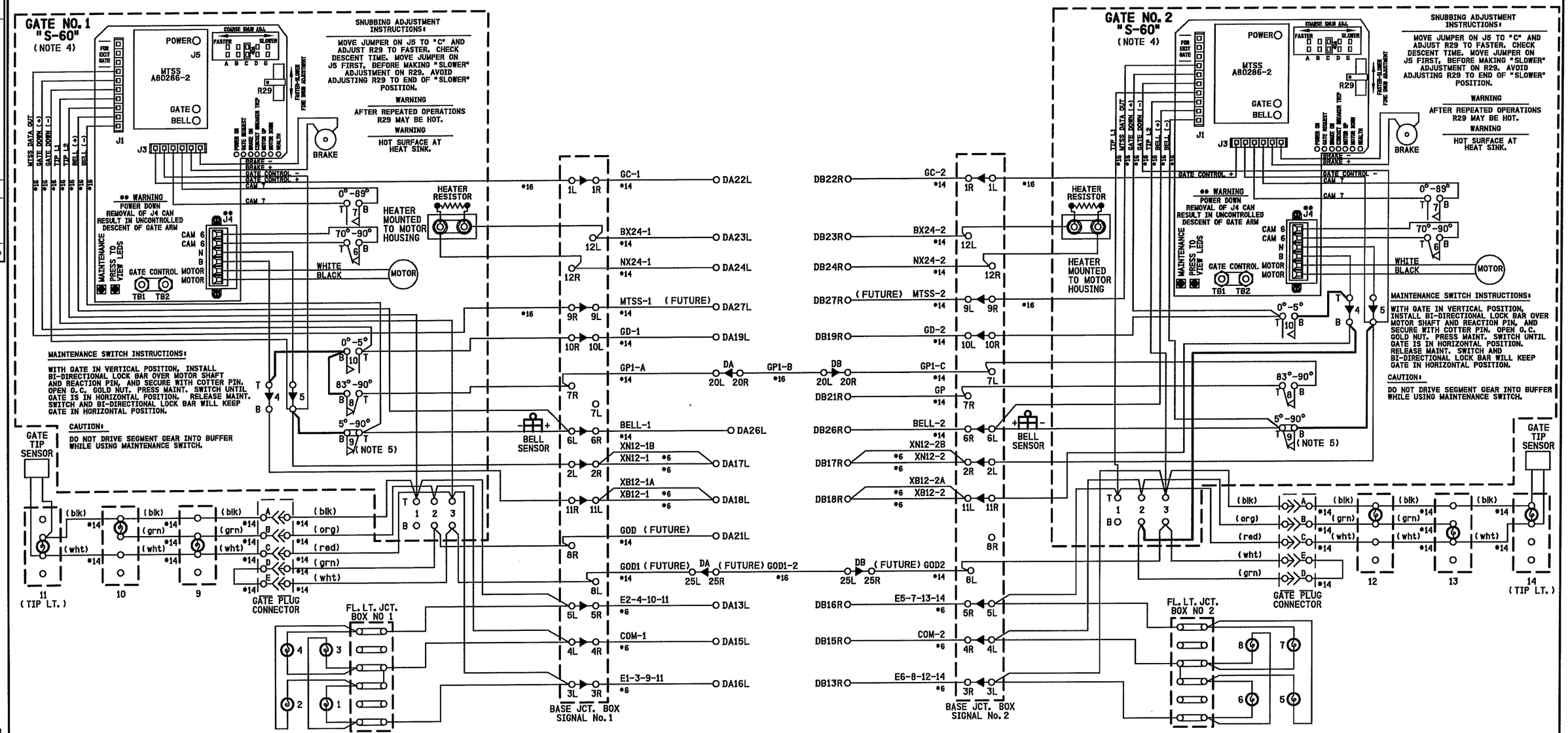

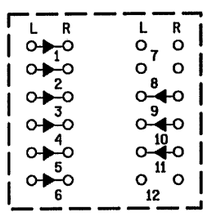

TERMINAL NUMBERING
BASE JCT. BOX 1

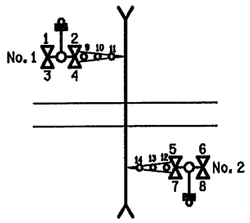

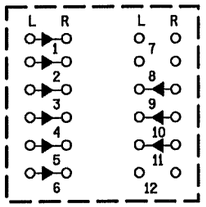

TERMINAL NUMBERING
BASE JCT. BOX 2

NOTES:

1) ON GATE No. 1 ADD JUMPER BETWEEN TERMINALS:
   ADD JUMPER BETWEEN TERMINAL 4T & 10B,
   ADD JUMPER BETWEEN TERMINAL 10B & 8B
   AND ADD JUMPER BETWEEN TERMINAL 5B & 9B.
2) ON GATE No. 2 ADD JUMPER BETWEEN TERMINALS:
   ADD JUMPER BETWEEN TERMINAL 4T &10B,
   ADD JUMPER BETWEEN TERMINAL 5B & 9B,
   AND ADD JUMPER BETWEEN TERMINAL 4B & 2B.
3) ALL WIRING #10 AWG MINIMUM UNLESS OTHERWISE NOTED. WIRE SIZES SHOWN ARE MINIMUM GAUGE.
4) GATE DESCENT TIME (RELEASE FROM VERTICAL TO FULLY HORIZONTAL) TO BE WITHIN 11 SECONDS.
5) BELL CUT-OUT (5°-90°) WHEN REQUIRED REMOVE STRAP BETWEEN 9B AND 9T.
6) ENSURE ALL TERMINALS HAVE TWO SHOULDER NUTS.

8' X 10' BUNGALOW

PROPOSED D	PROPOSED M	PROPOSED Y	REVISIONS	D	C	COMPLETED D	COMPLETED M	COMPLETED Y	C

REGION SOUTHERN
SUB. MATTESON 334

SIGNALS AND COMMUNICATIONS HOMEWOOD
19 MAY 2010

DES. MKN
CH. DTB

GATE MECHANISM CONTROL CIRCUITS
SAFETRAN MODEL S-60
GOUGAR ROAD
MOKENA, IL

MTS-006.00-16

SAFETRAN SYSTEM CORP.
LOUISVILLE DIVISION, LOUISVILLE, KY

SAFETRAN SYSTEMS CORPORATION		
DES. : MKN	DATE: 19/05/10	JOB NO. : JXXE01548
CKD. : DTB	ISSUE DATE: N/A	EST. NO. :
DRN. : DL	PLAN NO. :N/A	SHEET 16 OF 19
P TIME:13:44	P DATE: 28-MAY-2010	CAD ID. :MTS-006.00-16

$WATERMARK

REVISIONS				
NO.	DATE	BY	DESCRIPTION	APP. BY
1				
2				
3				
4				
5				

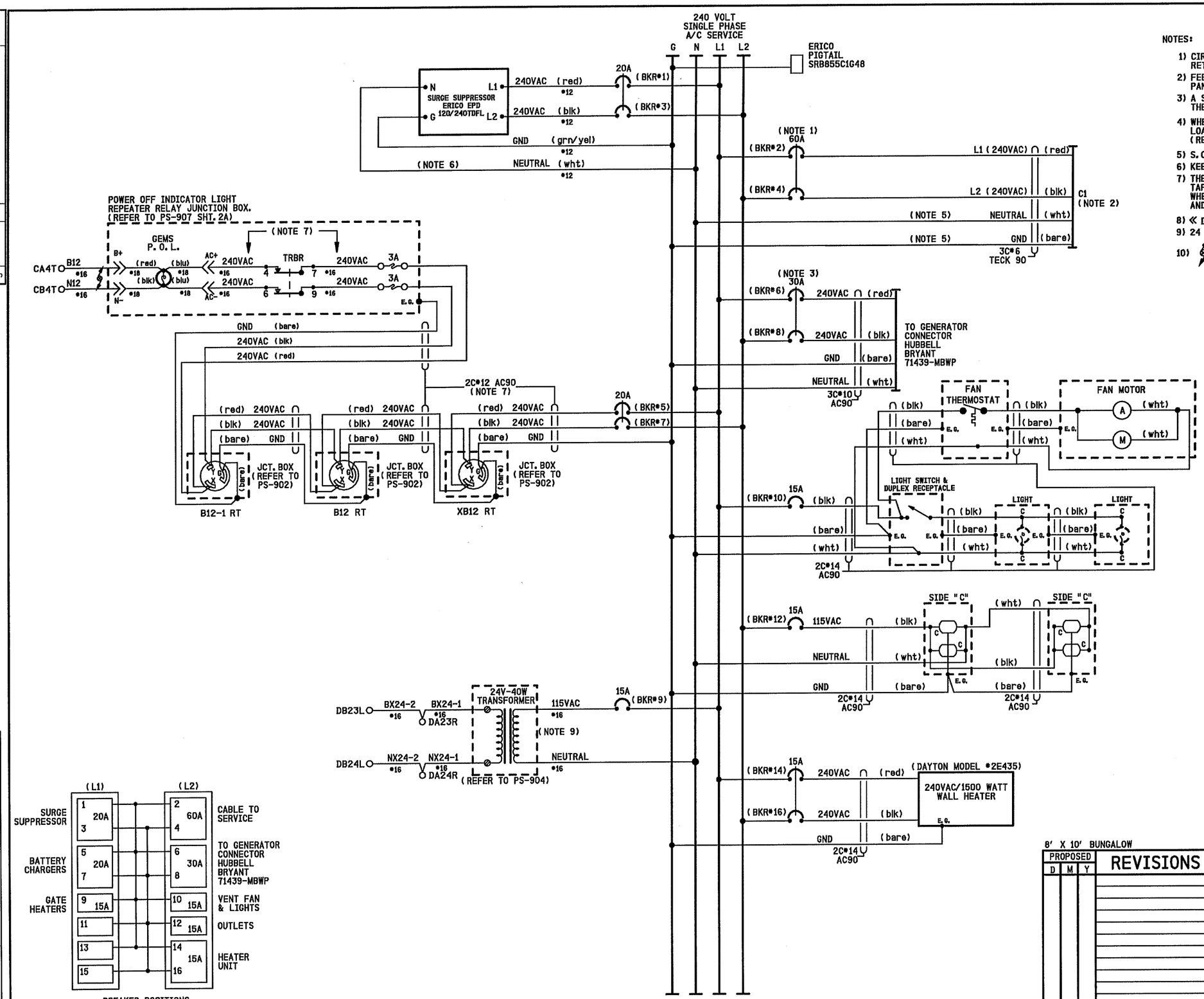

NOTES:

1) CIRCUIT BREAKER NOT TO EXCEED 60 AMPERES. RETAINING KIT PK4MB2LA MUST BE USED WITH 60A BREAKER.
2) FEEDER CIRCUIT BREAKER, AT STUB POLE SERVICE PANEL, NOT TO EXCEED 60 AMPERES.
3) A SWITCH TRANSFER KIT MUST BE INSTALLED BETWEEN THE SERVICE DISCONNECT BREAKER AND THE GENERATOR HOOK UP.
4) WHERE SEPARATE GROUND WIRE EXISTS BETWEEN THE SERVICE AND THE LOAD CENTER, REMOVE THE BRASS COLORED BONDING SCREW. (REFER TO SCHEMATIC ON BOX COVER FOR EXACT LOCATION)
5) S.C.*6 STRANDED, CSA TYPE R90 (X-LINK)
6) KEEP LEADS AS SHORT AS POSSIBLE
7) THE WHITE CONDUCTOR MUST BE MADE PERMANENTLY UNIDENTIFIABLE BY TAPING THIS CONDUCTOR RED. TAPING MUST BE CONTINUOUS WHERE THE SEPARATE CONDUCTORS HAVE BEEN MADE ACCESSIBLE AND VISIBLE.
8) « DENOTES WAGO TERMINAL
9) 24 VOLT - 40 WATT TRANSFORMER (CN STOCK *02-45-367)
10) ⊗ DENOTES TWISTED PAIR.

mts-006.00-17.dgn
28-MAY-2010

PROPOSED
DES. No. _____
RED-IN YELLOW-OUT
AS INSTALLED
DATE _____
BY _____

8' X 10' BUNGALOW

PROPOSED D	PROPOSED M	PROPOSED Y	REVISIONS	D	C	COMPLETED D	COMPLETED M	COMPLETED Y	C

REGION SOUTHERN
SUB. MATTESON 334
SIGNALS AND COMMUNICATIONS HOMEWOOD
19 MAY 2010
DES. MKN
CH. DTB
POWER DISTRIBUTION
AC
GOUGAR ROAD
MOKENA, IL
MTS-006.00-17

SAFETRAN SYSTEM CORP.
LOUISVILLE DIVISION, LOUISVILLE, KY

SAFETRAN SYSTEMS CORPORATION

DES. : MKN	DATE: 19/05/10	JOB NO. : UXXE01548	
CKD. : DTB	ISSUE DATE: N/A	EST. NO. :N/A	
DRN. : DL	PLAN NO. :N/A	SHEET 17 OF 19	
P TIME:13:44	P DATE: 28-MAY-2010	CAD ID. :MTS-006.00-17	

$WATERMARK

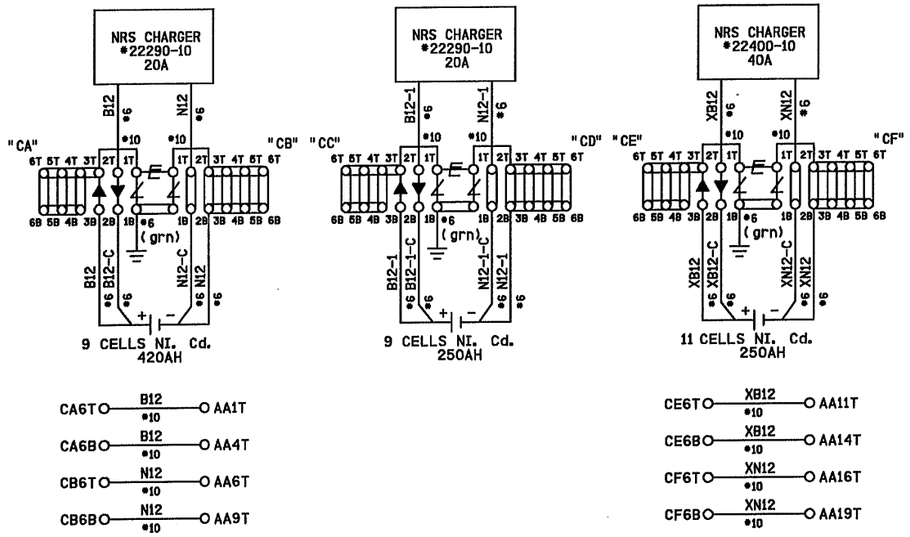

PROPOSED
DES. No. _____
RED-IN YELLOW-OUT
AS INSTALLED
DATE _____
BY _____

8' X 10' BUNGALOW

PROPOSED D	M	Y	REVISIONS	D	C	COMPLETED D	M	Y	C

REGION SOUTHERN
SUB. MATTESON 334

SIGNALS AND COMMUNICATIONS HOMEWOOD
19 MAY 2010
DES. MKN
CH. DTB

POWER DISTRIBUTION
DC
GOUGAR ROAD
MOKENA, IL

MTS-006.00-18

SAFETRAN SYSTEM CORP.
LOUISVILLE DIVISION, LOUISVILLE, KY

mts-006.00-18.dgn
28-MAY-2010

REVISIONS				
NO.	DATE	BY	DESCRIPTION	APP. BY
1				
2				
3				
4				
5				

SAFETRAN SYSTEMS CORPORATION

DES. : MKN	DATE: 19/05/10	JOB NO. : UXXE01548
CKD. : DTB	ISSUE DATE: N/A	EST. NO. :N/A
DRN. : DL	PLAN NO. :N/A	SHEET 18 OF 19
P TIME:13:44	P DATE: 28-MAY-2010	CAD ID. : MTS-006.00-18

$WATERMARK

DOT:	EJ&E MP 2.50	
EQUIPMENT	QUADRANT	
	NW	SE
FLS	-	-
GATE (MODEL)	S-60	S-60
GATE (FT')	18'	18'
CANTILEVER (FT')	-	-
ADDITIONAL LIGHTS	-	-
BELL	X	X
X BUCKS	X	X
MULTIPLE TRACK SIGNS	X	X

HOUSE CABLE ASSIGNMENTS	
DEVICE	CABLE(S)
GATE No.1	16C (7*6, 9*14)
GATE No.2	16C (7*6, 9*14)
T1-1, T2-1	2C *6 TW
R1-1, R2-1	2C *6 TW
T1-2, T2-2	2C *6 TW
R1-2, R2-2	2C *6 TW
T1-3, T2-3	2C *6 TW
R1-3, R2-3	2C *6 TW
T1-4, T2-4	2C *6 TW
R1-4, R2-4	2C *6 TW
AC POWER	3C *6

GUIDELINES FOR CROSSING WARNING TIME AND APPROACH DISTANCE CALCULATIONS	
MAX SPEED IN MPH	45
CT IN SECONDS	0
BUFFER TIME IN SECONDS	5
TOTAL WARNING TIME IN SECONDS	30
ERT IN SECONDS	5
APT IN SECONDS	0
TOTAL APPROACH TIME IN SECONDS	35
APPROACH DISTANCE IN FEET	2310
SPEED IN FPS	66
CLEARANCE TIME CALCULATION	
LONGEST DISTANCE IN FEET (35 FEET MINIMUM)	--
CT IN SECONDS	--
APT - ADVANCED PRE-EMPTION ERT - EQUIPMENT RESPONSE TIME CT - CLEARANCE TIME	

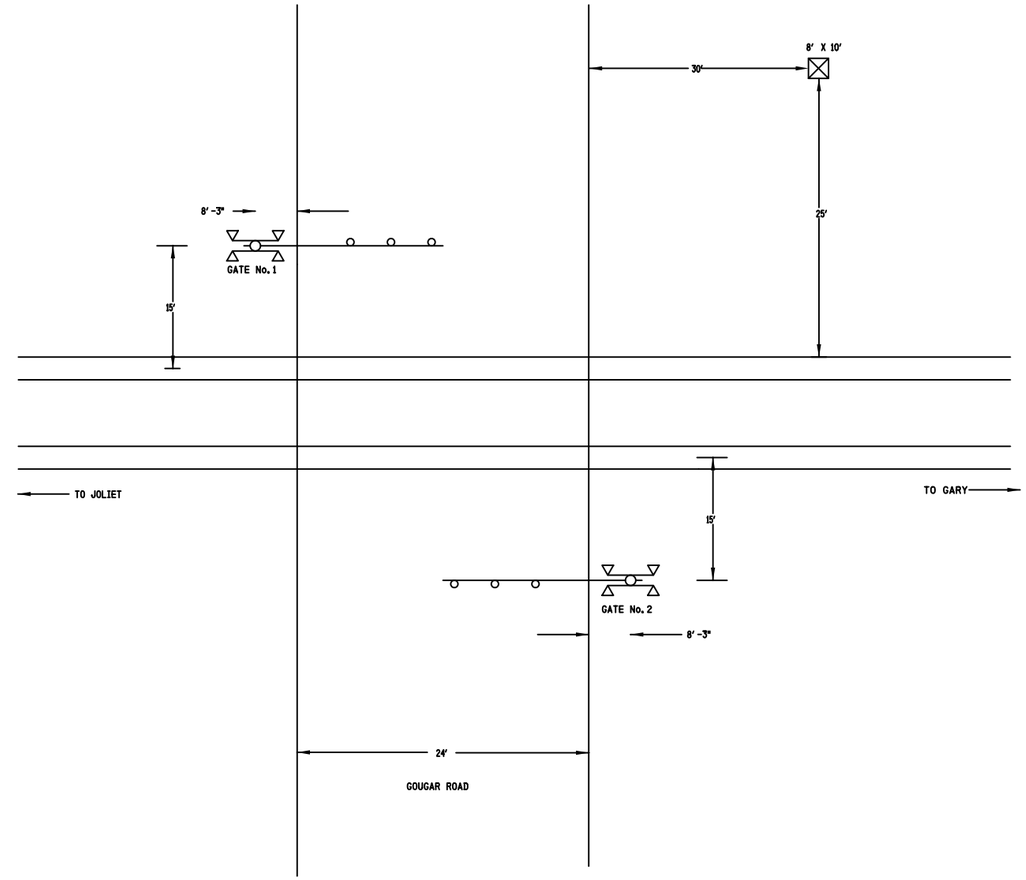

PROPOSED
DES. No. _____
RED-IN YELLOW-OUT
AS INSTALLED
DATE _____
BY _____

8' X 10' BUNGALOW

PROPOSED			REVISIONS	D	C	COMPLETED			C
D	M	Y				D	M	Y	

REGION SOUTHERN
SUB. MATTESON 334

SIGNALS AND COMMUNICATIONS
HOMEWOOD
19 MAY 2010

DES. MKN
CH. DTB

CROSSING DETAIL
AND CALCULATIONS
GOUGAR ROAD
MOKENA, IL

MTS-006.00-19

19

SAFETRAN SYSTEM CORP.
LOUISVILLE DIVISION, LOUISVILLE, KY

mts-006.00-19.dgn
31-MAY-2011

REVISIONS				
NO.	DATE	BY	DESCRIPTION	APP. BY
1				
2				
3				
4				
5				

SAFETRAN SYSTEMS CORPORATION

DES.: MKN	DATE: 19/05/10	JOB NO.: JXXE01548	
CKD.: DTB	ISSUE DATE: N/A	EST. NO.: N/A	
DRN.: DL	PLAN NO.: N/A	SHEET 19 OF 19	
P TIME: 10:40	P DATE: 31-MAY-2011	CAD ID.: MTS-006.00-19	