SD 1012 - MP 278 TO 279

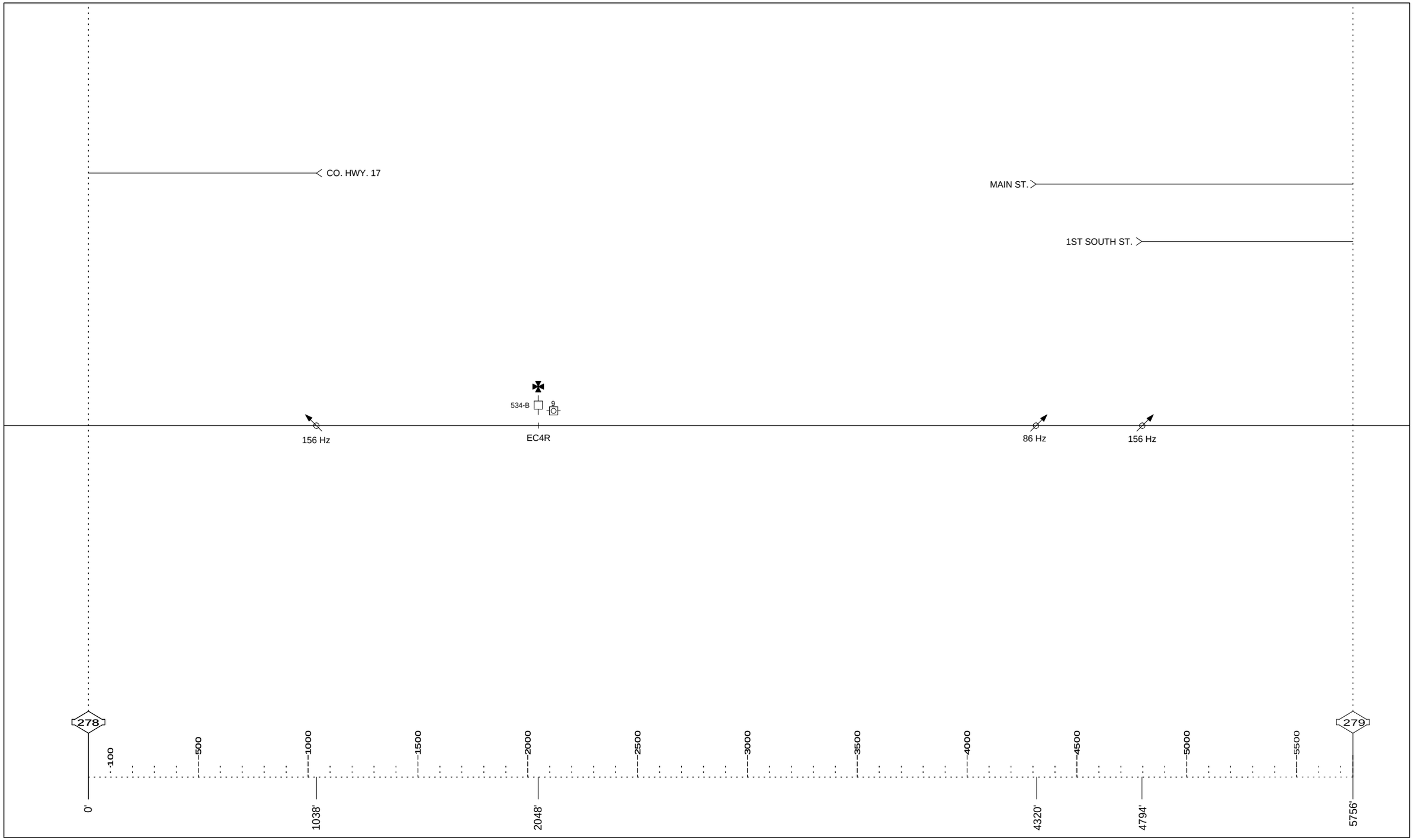

DRAWING SCALE 1" = 500'

6-22-06

SD 1012 - MP 279 TO 280

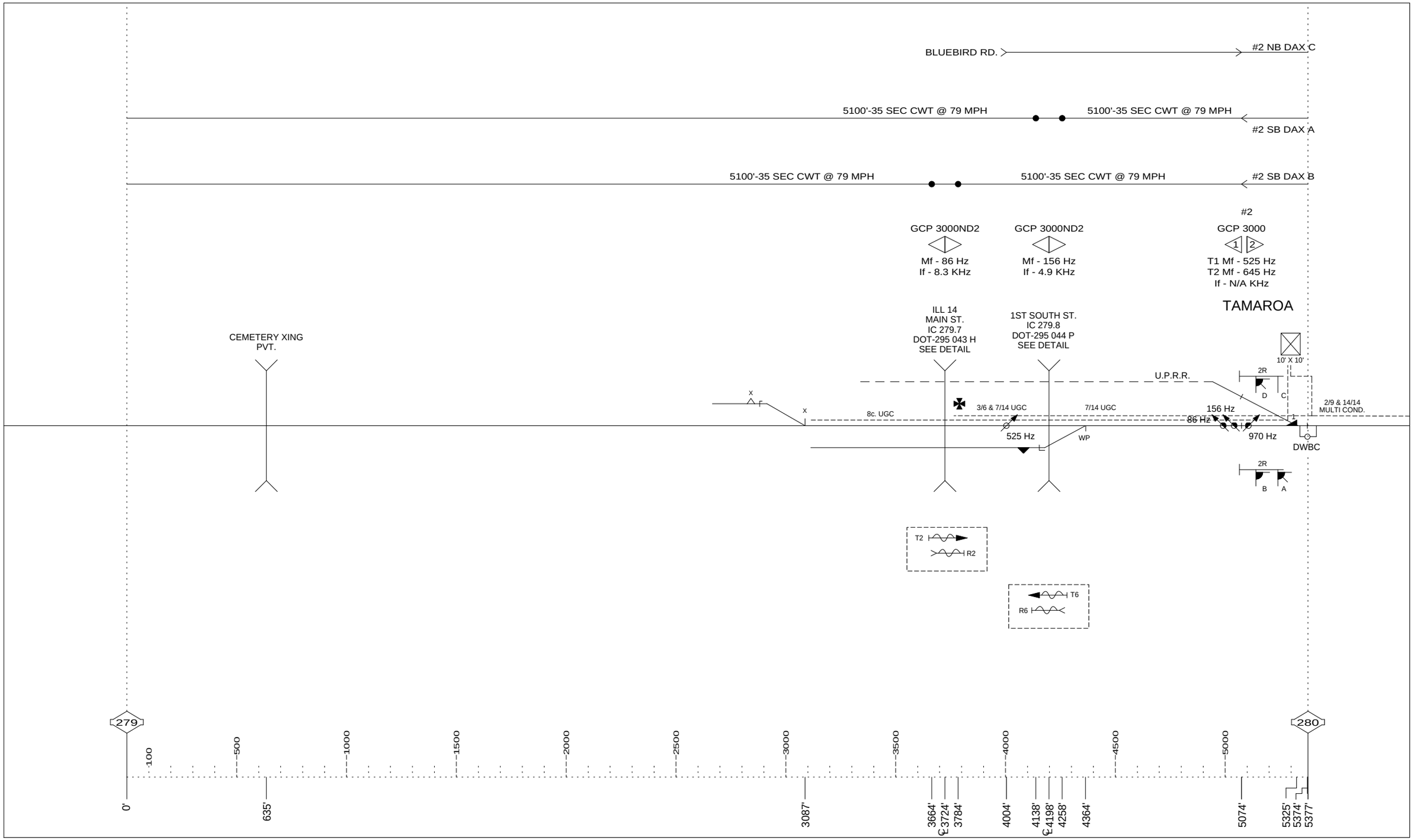

DRAWING SCALE 1" = 500'

11-12-03

SD 1012 - MP 280 TO 281

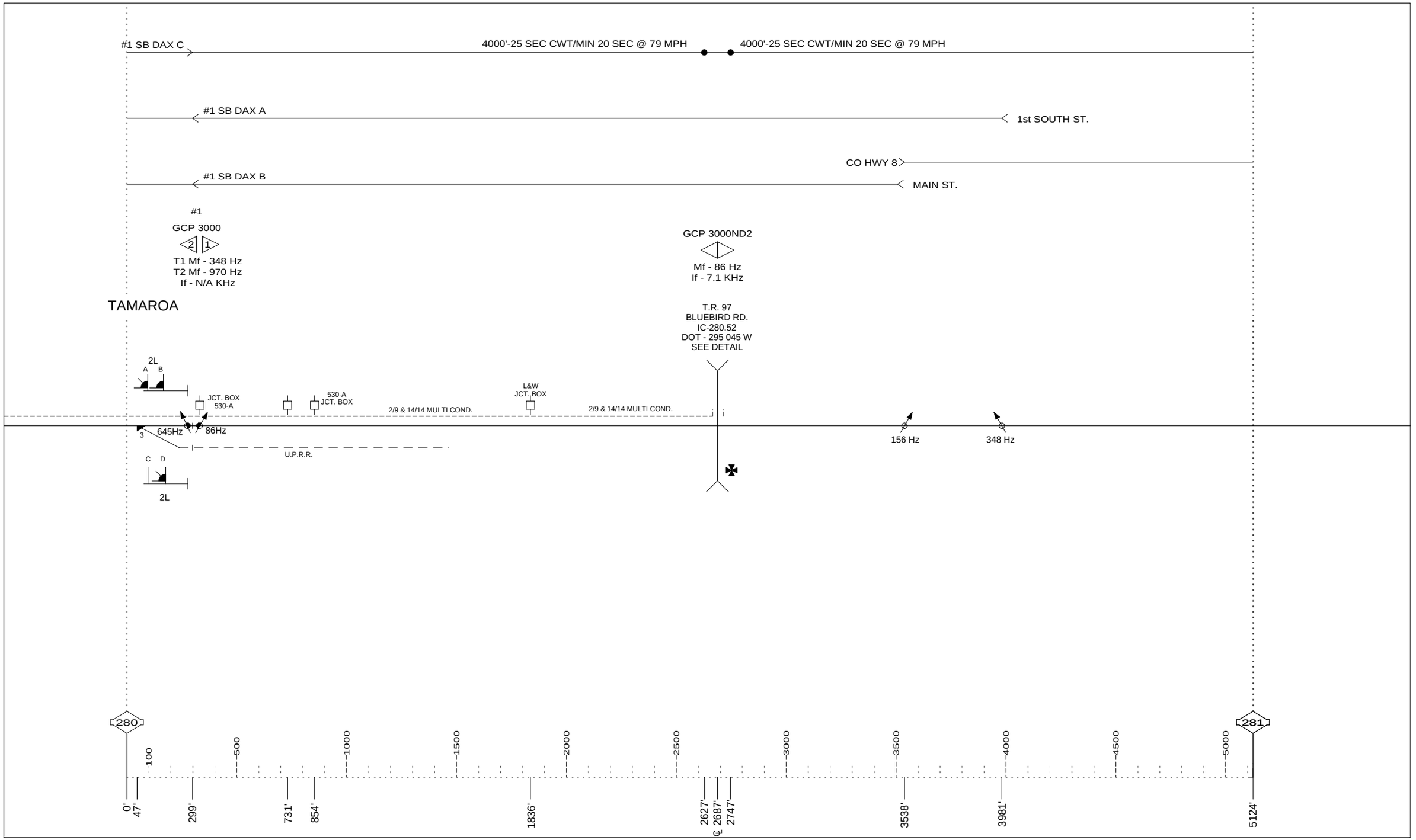

DRAWING SCALE 1" = 500'

2-26-04

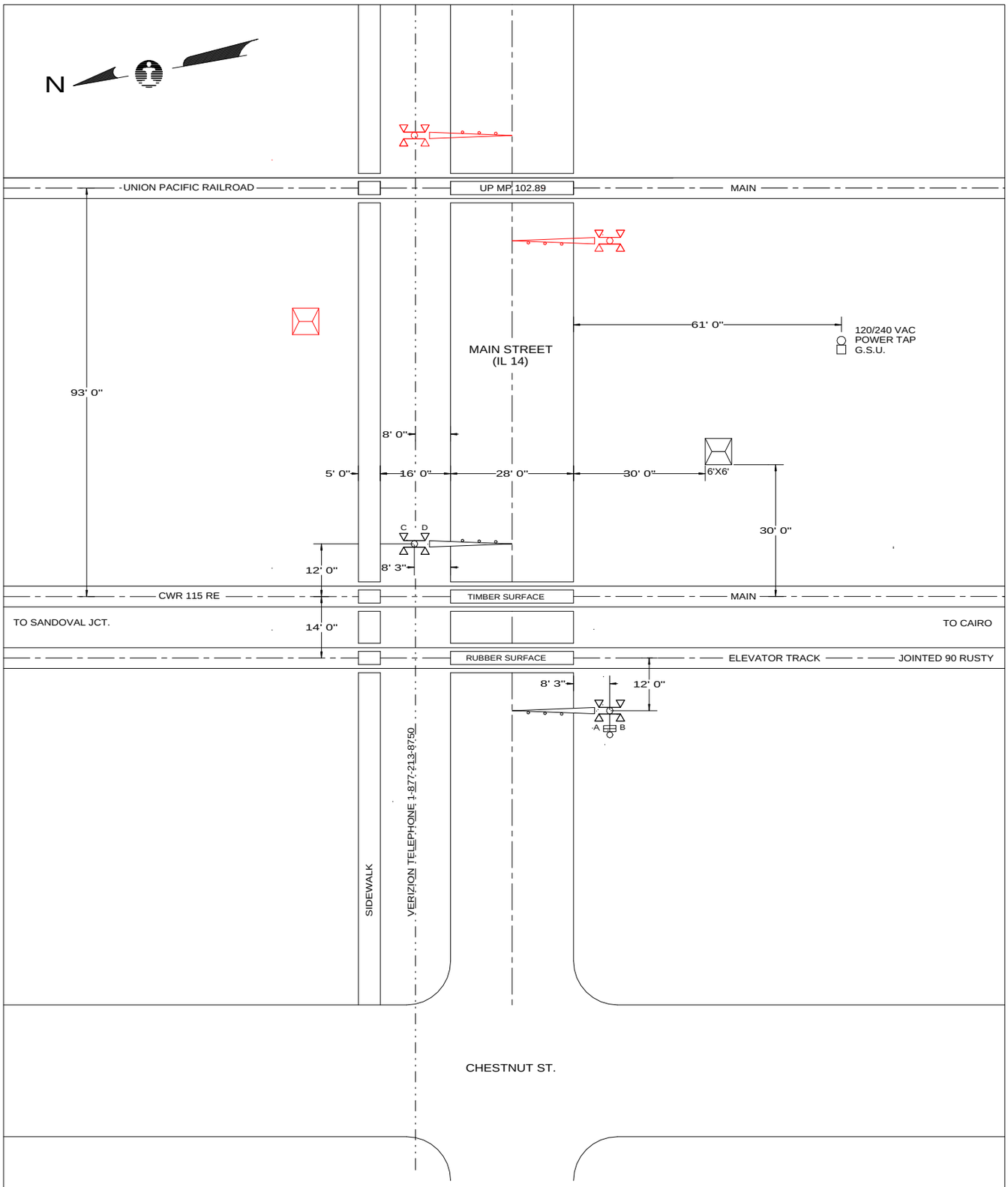

QUADRANT	NE		SW	
STANDARD AFLS	-		-	
CANTILEVER, FT.	-		-	
GATE, FT.	22		22	
ADDED LIGHTS	-		-	
BARRICADE	-		-	
CANTILEVER SIGN	-		-	
BELL	-		X	
REVISIONS	11-12-03			

Illinois Central

COMMUNICATIONS & SIGNALS,
ENGINEERING DEPARTMENT

CITY & STATE	TAMAROA, IL	SD 1012 X	
CROSSING	MAIN STREET (IL 14)	DATE	DEC. 21, 2000
IC - 279.70		DOT - 295 043H	
SOUTHERN REGION		CENTRALIA SUBDIVISION	
IN SERVICE 2/5/1941	SCALE 1"=30'	DRAWN BY MAK	

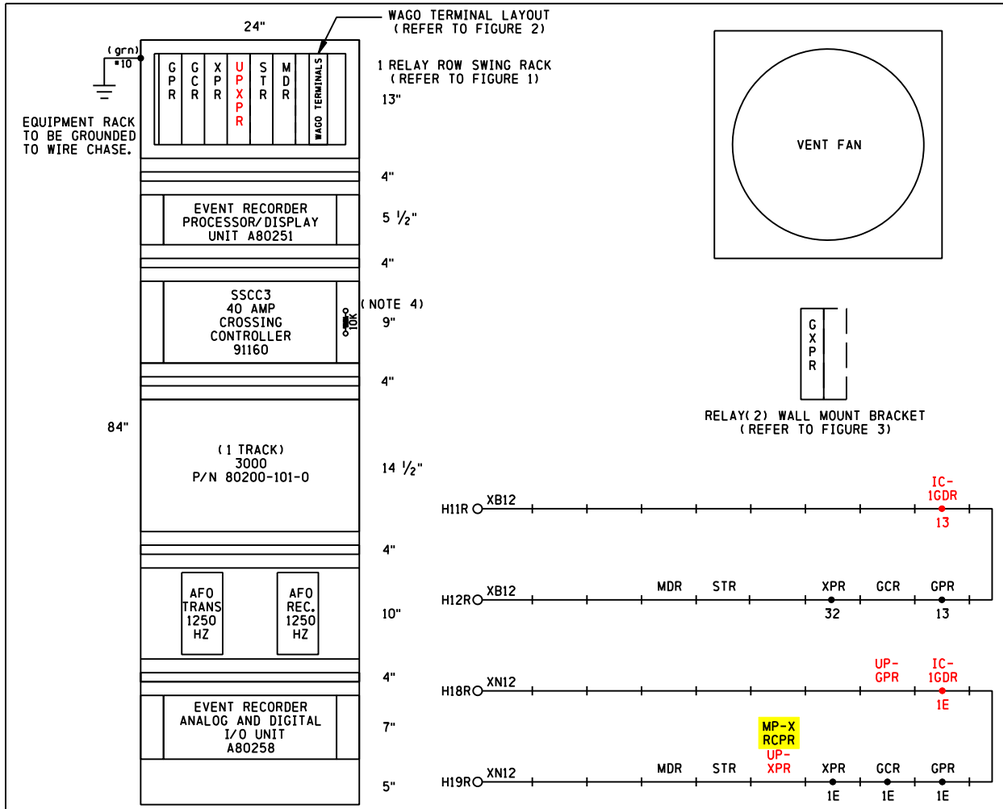

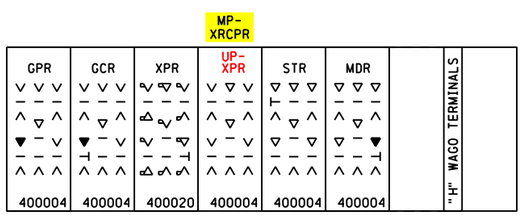

RELAY LAYOUT
FIGURE 1

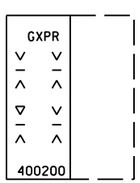

RELAY LAYOUT
FIGURE 3

WAGO MATERIAL

MOUNTING, DIN 35 RAIL
TERMINAL BLOCK #282-601
MARKER, 1-50 CARD #209-566
END PLATE #282-317
SEPARATOR #282-327
JUMPER, ADJACENT #282-402

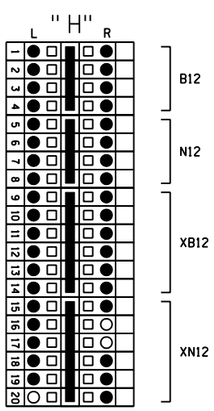

WAGO TERMINAL LAYOUT
FIGURE 2

SIDE "A"

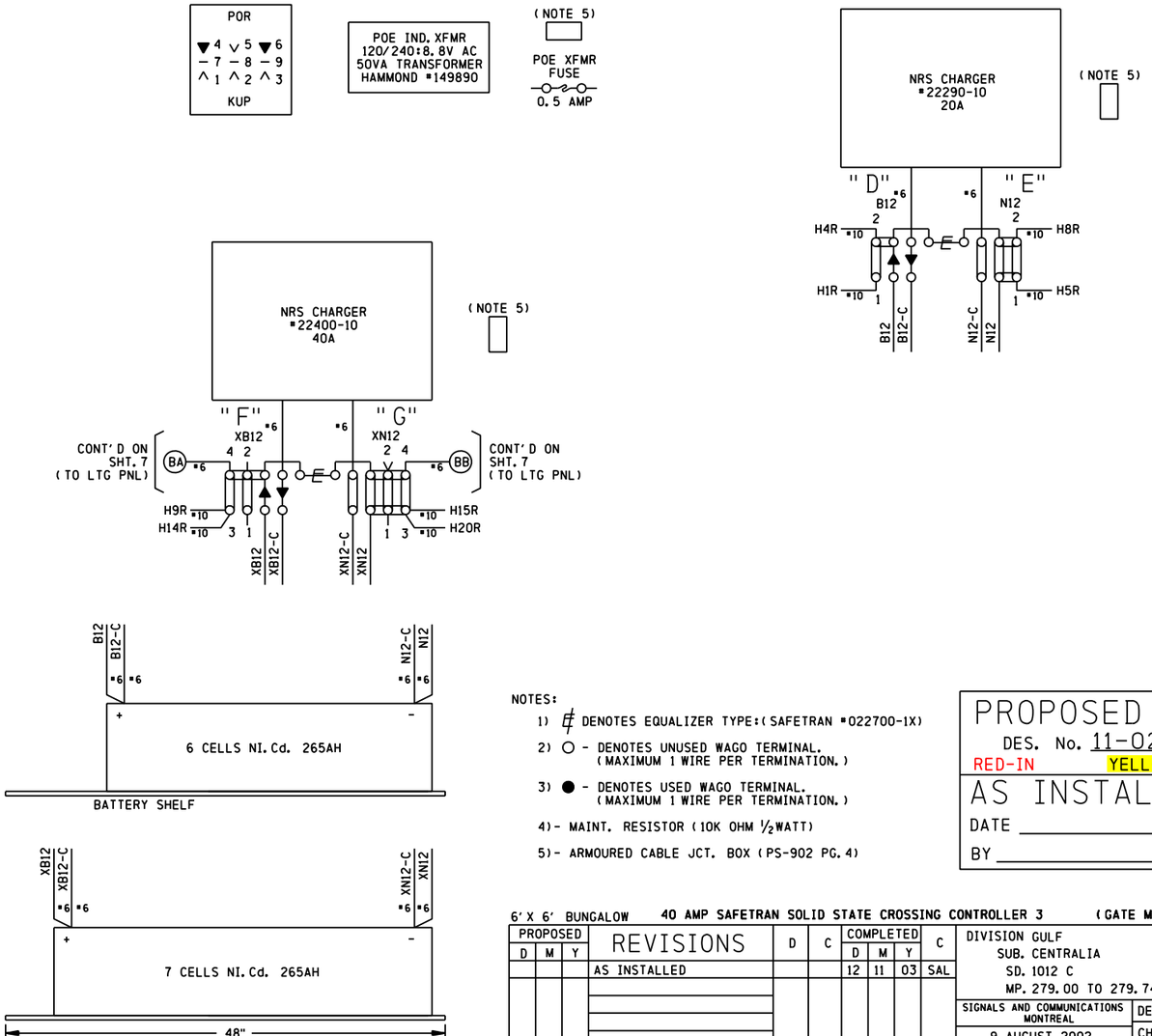

SIDE "B"

NOTES:

1) # DENOTES EQUALIZER TYPE:(SAFETRAN #022700-1X)
2) ○ - DENOTES UNUSED WAGO TERMINAL. (MAXIMUM 1 WIRE PER TERMINATION.)
3) ● - DENOTES USED WAGO TERMINAL. (MAXIMUM 1 WIRE PER TERMINATION.)
4) - MAINT. RESISTOR (10K OHM 1/2WATT)
5) - ARMOURED CABLE JCT. BOX (PS-902 PG.4)

PROPOSED
DES. No. 11-0245
RED-IN YELLOW-OUT
AS INSTALLED
DATE _____
BY _____

6' X 6' BUNGALOW 40 AMP SAFETRAN SOLID STATE CROSSING CONTROLLER 3 (GATE MECHANISM)

PROPOSED D	PROPOSED M	PROPOSED Y	REVISIONS	D	C	COMPLETED D	COMPLETED M	COMPLETED Y	C
			AS INSTALLED			12	11	03	SAL

DIVISION GULF
SUB. CENTRALIA
SD. 1012 C
MP. 279.00 TO 279.74

SIGNALS AND COMMUNICATIONS MONTREAL
DES. CSM
CH. MSM
9 AUGUST 2002

BUNGALOW LAYOUT (SIDE A & B) MAIN ST. (IL.14)
TAMAROA, IL

CEN-279.70-01

11

SAFETRAN SYSTEM CORP.
LOUISVILLE DIVISION, LOUISVILLE, KY

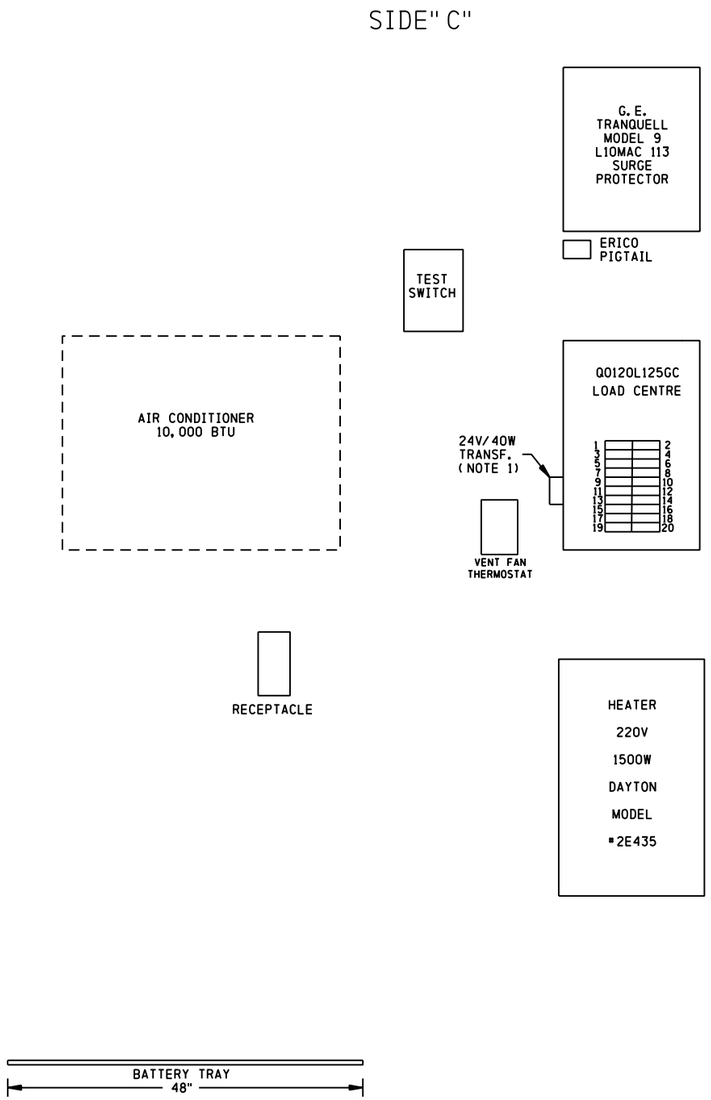

NOTES:
1) 24V-40W TRANSFORMER (CN STOCK #02-45-367)

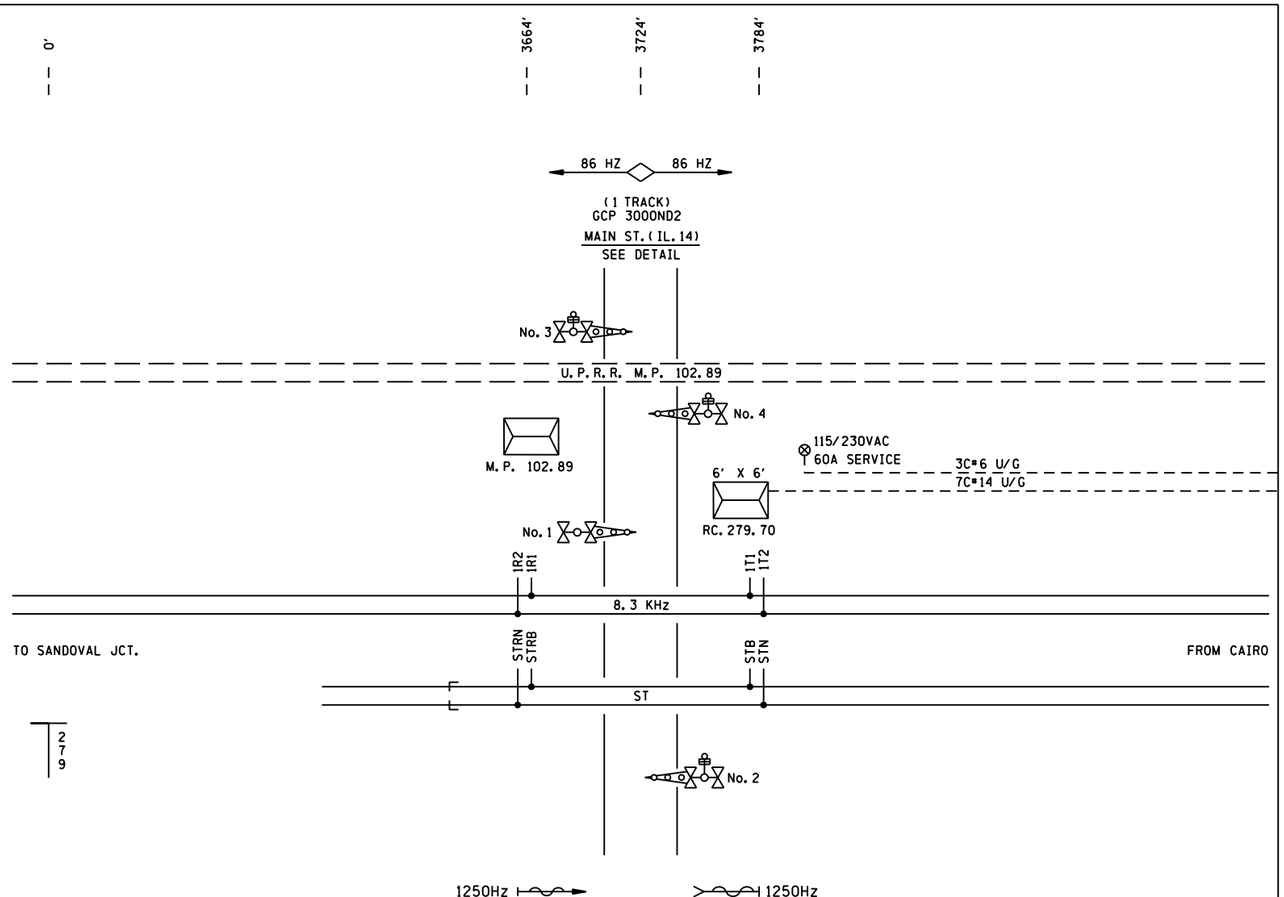

NOTE:

WHEN THE UP TRACK IS OCCUPIED:
- FLASH THE FRONT LIGHTS AND THE GATE LIGHTS ON SIGNAL 3 & 2.
- FLASH THE BACK LIGHTS ON SIGNAL 4 & 1. BELLS BEGIN TO RING.
- AFTER THE GATE DELAY TIME, THE GATES START TO DESCEND ON SIGNALS 3 & 2.
- AFTER THE ADJACENT TRACK CLEARANCE TIME HAS EXPIRED, FLASH THE FRONT LIGHTS AND THE GATE LIGHTS ON SIGNAL 4. FLASH THE BACK LIGHTS ON SIGNAL 3.
- AFTER THE GATE DELAY TIME, GATE 4 SHOULD START TO DESCEND.
- IF A TRAIN APPROACHES ON IC TRACK (WITH UP TRACK STILL OCCUPIED) FLASH THE FRONT LIGHTS AND THE GATE LIGHTS ON SIGNAL 1. FLASH THE BACK LIGHTS ON SIGNAL 2.
- AFTER THE GATE DELAY TIME, GATE 1 SHOULD START TO DESCEND.

WHEN THE IC TRACKS ARE OCCUPIED:
- FLASH THE FRONT LIGHTS AND THE GATE LIGHTS ON SIGNAL 3 & 2.
- FLASH THE BACK LIGHTS ON SIGNAL 4 & 1. BELLS BEGIN TO RING.
- AFTER THE GATE DELAY TIME, THE GATES START TO DESCEND ON SIGNALS 3 & 2.
- AFTER THE ADJACENT TRACK CLEARANCE TIME HAS EXPIRED, FLASH THE FRONT LIGHTS AND THE GATE LIGHTS ON SIGNAL 1. FLASH THE BACK LIGHTS ON SIGNAL 2.
- AFTER THE GATE DELAY TIME, GATE 1 SHOULD START TO DESCEND.
- IF A TRAIN APPROACHES ON UP TRACK (WITH IC TRACK STILL OCCUPIED) FLASH THE FRONT LIGHTS AND THE GATE LIGHTS ON SIGNAL 4. FLASH THE BACK LIGHTS ON SIGNAL 3.
- AFTER THE GATE DELAY TIME, GATE 4 SHOULD START TO DESCEND.

6' X 6' BUNGALOW — 40 AMP SAFETRAN SOLID STATE CROSSING CONTROLLER 3 — (GATE MECHANISM)

PROPOSED D	PROPOSED M	PROPOSED Y	REVISIONS	D	C	COMPLETED D	COMPLETED M	COMPLETED Y	C
			AS INSTALLED			12	11	03	SAL

DIVISION GULF
SUB. CENTRALIA
SD. 1012 C
MP. 279.00 TO 279.74

SIGNALS AND COMMUNICATIONS MONTREAL
DES. CSM
CH. MSM
9 AUGUST 2002

BUNGALOW LAYOUT
SIDE C
MAIN ST. (IL. 14)
TAMAROA, IL

CEN-279.70-02

SAFETRAN SYSTEM CORP.
LOUISVILLE DIVISION, LOUISVILLE, KY

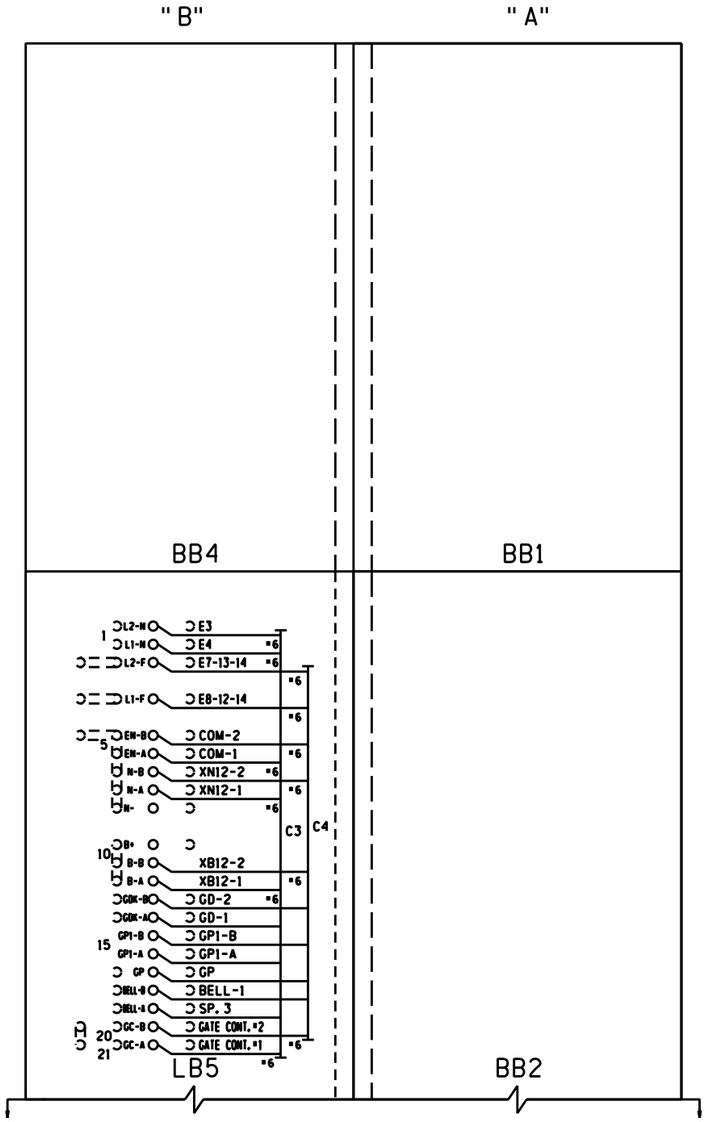

SIDE "D" (OUTSIDE)

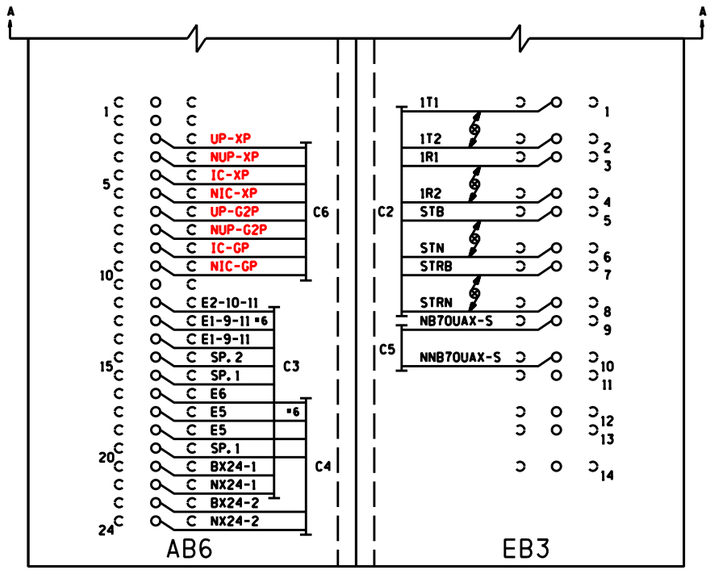

(REAR VIEW)

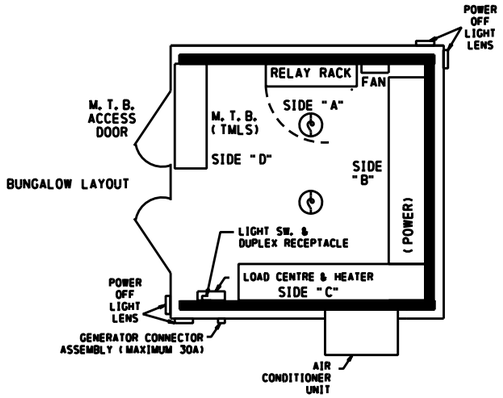

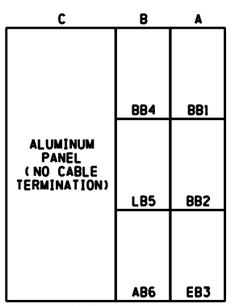

FARADAY CAGE (REAR VIEW)

NOTE:

DENOTES TWISTED PAIRS.

CABLE CONSIST:

C1- 3C#6 TECK 90 U/G TO MAIN SERVICE
C2- (2)-2SC#6 TW. TO TRACK
C3-16C (7#6, 9#14) TO GATE #1
C4-16C (7#6, 9#14) TO GATE #2
C5-7C#14 TO XING @ M. 279.80
C6-8C TO UP MAIN ST 5C#14

PROPOSED
DES. No. 11-0245
RED-IN YELLOW-OUT
AS INSTALLED
DATE _____
BY _____

6' x 6' BUNGALOW

PROPOSED D	M	Y	REVISIONS	D	C	COMPLETED D	M	Y	C
			AS INSTALLED			12	11	03	SAL

DIVISION GULF
SUB. CENTRALIA
SD. 1012 C
MP. 279.00 TO 279.74

SIGNALS AND COMMUNICATIONS MONTREAL
DES. CSM
9 AUGUST 2002
CH. MSM

BUNGALOW LAYOUT
TERMINAL BOARD (OUTSIDE)
MAIN ST. (IL.14)
TAMAROA, IL

CEN-279.70-03

SAFETRAN SYSTEM CORP.
LOUISVILLE DIVISION, LOUISVILLE, KY

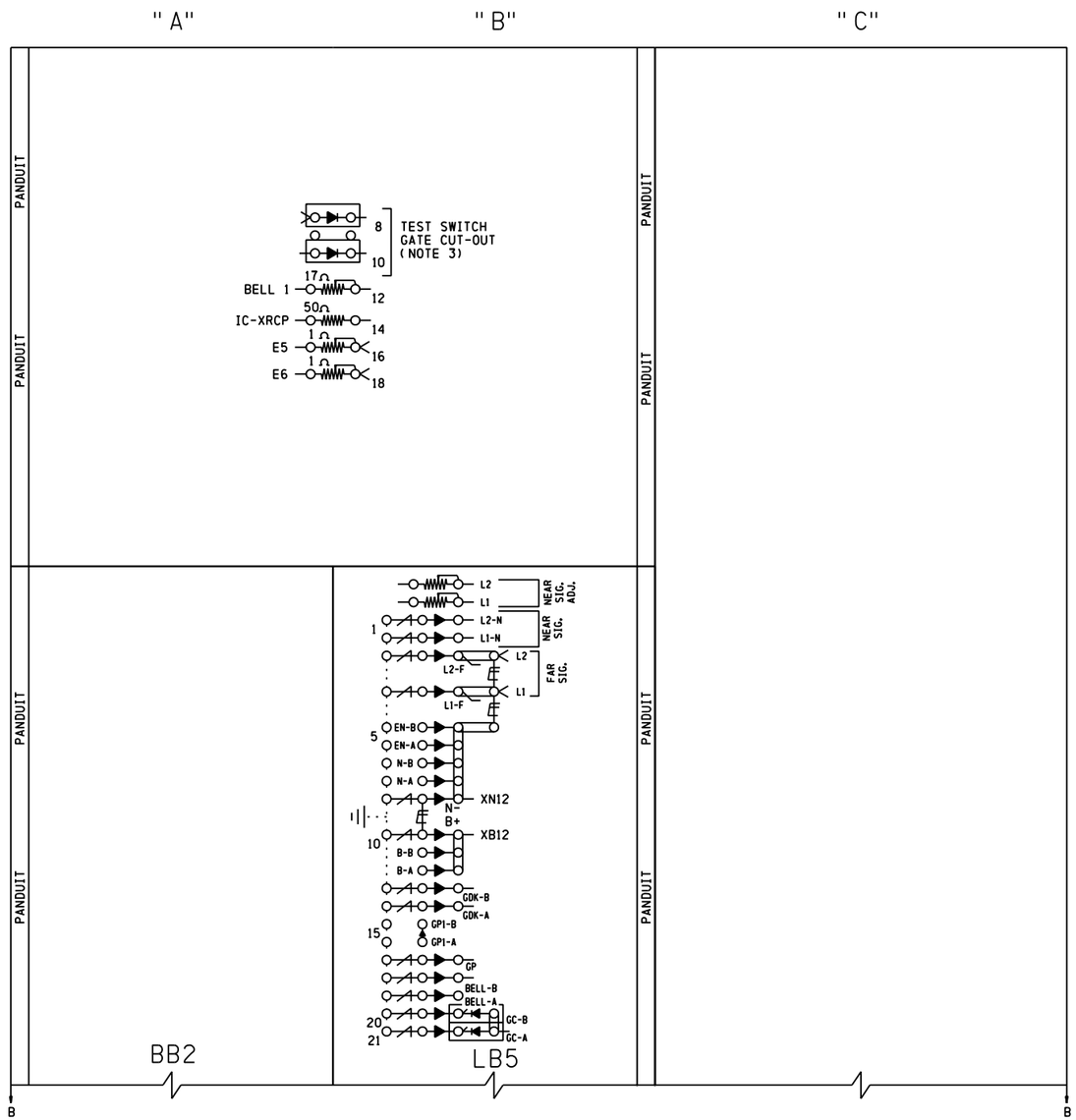

SIDE "D" (INSIDE)

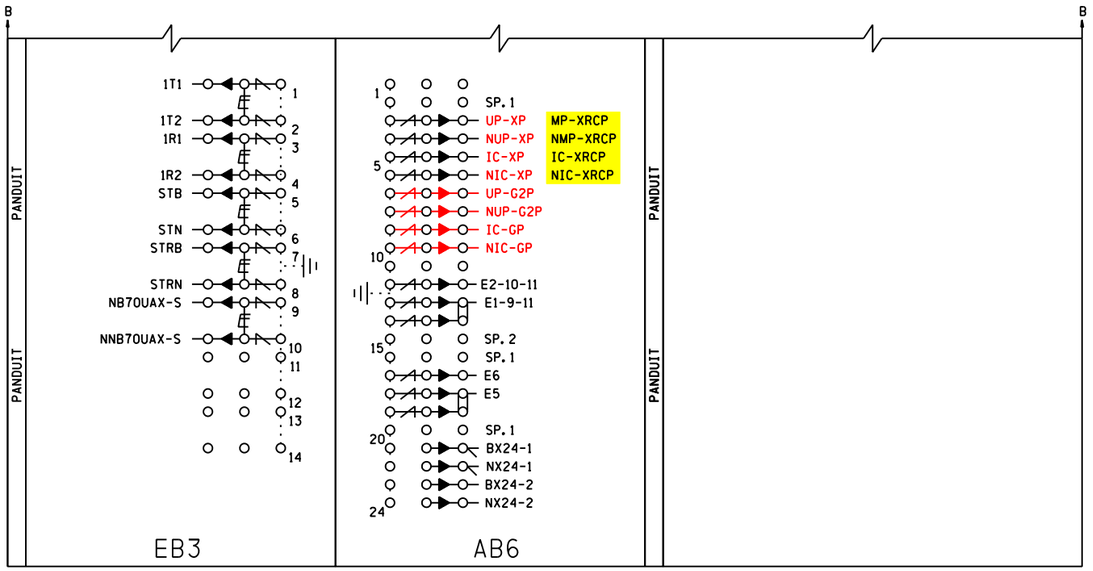

(FRONT VIEW)

NOTES:

1) DENOTES LIGHTNING ARRESTER TYPE:(SAFETRAN #022585-1X)

2) DENOTES EQUALIZER TYPE:(SAFETRAN #022700-1X)

3) DENOTES RECTIFIER : (SAFETRAN# 8008A299006)

BLANK PANELS "BB1, BB2 & BB4" - SAFETRAN PART NUMBER A44883-170X1
ARRESTER PANEL "AB6" - SAFETRAN PART NUMBER A44883-176X1
EQUALIZER PANEL "EB3" - SAFETRAN PART NUMBER A44883-177X1
LIGHTING SURGE PANEL "LB5" - SAFETRAN PART NUMBER A44883-201X1

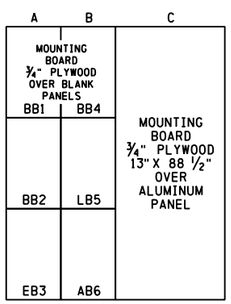

FARADAY CAGE
(FRONT VIEW)

PROPOSED
DES. No. 11-0245
RED-IN YELLOW-OUT
AS INSTALLED
DATE _____
BY _____

6' x 6' BUNGALOW

PROPOSED D	M	Y	REVISIONS	D	C	COMPLETED D	M	Y	C
			AS INSTALLED			12	11	03	SAL

DIVISION GULF
SUB. CENTRALIA
SD. 1012 C
MP. 279.00 TO 279.74

SIGNALS AND COMMUNICATIONS MONTREAL
9 AUGUST 2002
DES. CSM
CH. MSM

BUNGALOW LAYOUT (SIDE D)
TERMINAL BOARD (INSIDE)
MAIN ST.(IL.14)
TAMAROA, IL

CEN-279.70-04

SAFETRAN SYSTEM CORP.
LOUISVILLE DIVISION, LOUISVILLE, KY

NOTES:-

1- ALL WIRINGS #16 AWG MINIMUM UNLESS OTHERWISE NOTED. WIRE SIZES SHOWN ARE MINIMUM GAUGE.

2- DENOTES TWISTED PAIR.

3- SELECT ISLAND OPERATING FREQUENCY OF MODULE #80211 BY PLACING THE SHORTING BLOCK ACROSS THE APPROPRIATE PAIR OF PINS ON THE FREQUENCY SELECTION 16 POSITIONS HEADER BLOCK.

4- IPI MODULE PROGRAMMABLE PICKUP DELAY IS FACTORY SET TO "0" SECONDS (SHORTING BLOCKS INSTALLED ACROSS PAIR OF PINS "A" AND "B" ON THE FREQUENCY SELECTION 16 POSITIONS HEADER BLOCK) SET PICKUP DELAY TIME TO "2" SECONDS BY REMOVING SHORTING BLOCK ACROSS PAIR OF PINS "B".

5- ENSURE JUMPER LINKS CONNECTING TB3-1 AND 2, TB3-3 AND 4, TB4-1 AND 2 TB4-3 AND 4 ARE INSTALLED ON UNIT.

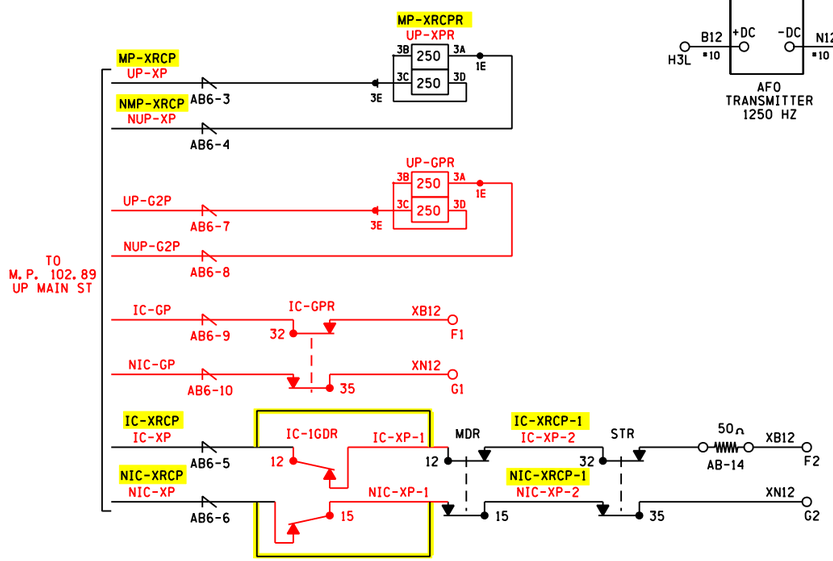

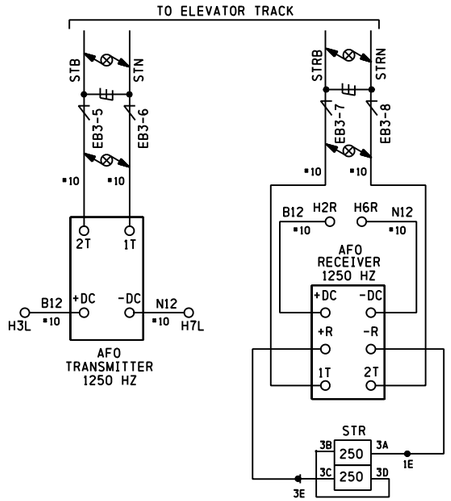

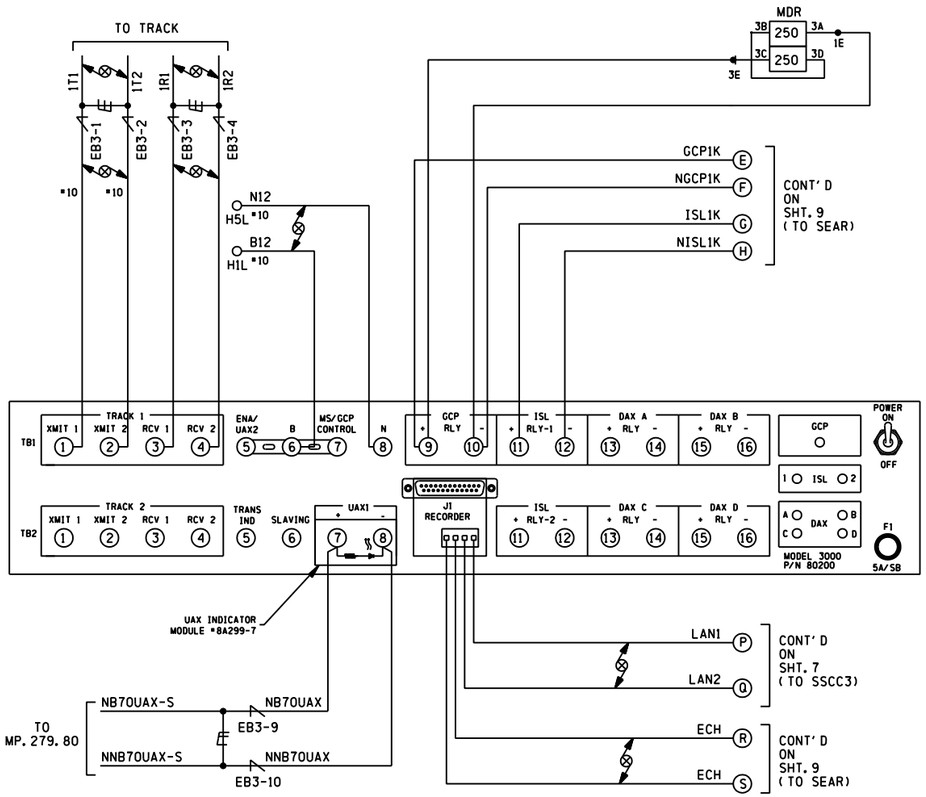

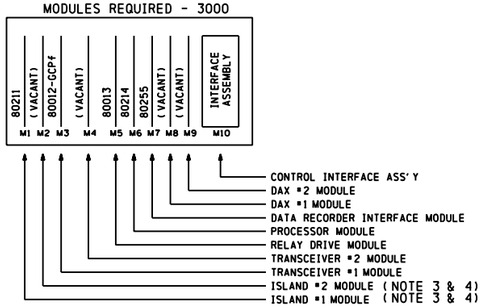

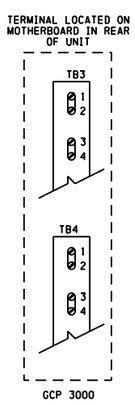

PROPOSED
DES. No. 11-0245
RED-IN YELLOW-OUT
AS INSTALLED
DATE _____
BY _____

6' x 6' BUNGALOW

PROPOSED D	PROPOSED M	PROPOSED Y	REVISIONS	D	C	COMPLETED D	COMPLETED M	COMPLETED Y	C
			AS INSTALLED			12	11	03	SAL

DIVISION GULF
SUB. CENTRALIA
SD. 1012 C
MP. 279.00 TO 279.74

SIGNALS AND COMMUNICATIONS MONTREAL
DES. CSM
CH. MSM
9 AUGUST 2002

MICRO GCP 3000ND2
1 TRACK
MAIN ST. (IL.14)
TAMAROA, IL

CEN-279.70-05

SAFETRAN SYSTEM CORP.
LOUISVILLE DIVISION, LOUISVILLE, KY

■ PRESS PROGRAM KEY

NUMBER OF TRACKS (NUMBER OF TRANSCEIVER MODULES) ... 1 ☑ 2 ☐

FREQUENCY (MS/GCP) ..... T1: 86 Hz
T2: N/A Hz

UNIDIRECTIONAL/BIDIRECTIONAL ..... T1: UNI ☐ BI ☑
T2: UNI ☐ BI ☐

XMIT LEVEL ..... T1: MAX ☑ MED ☐
T2: MAX ☐ MED ☐

PREDICTOR/MOTION SENSOR ..... T1: PRED ☑ MS ☐
T2: PRED ☐ MS ☐

WARNING TIME SELECTED ..... T1: 35 SEC.
T2: N/A SEC.

APPROACH DISTANCE SELECTED (NOTES 2,4 & 6) ..... T1: 5100 FT.
T2: N/A FT.

APPROACH DISTANCE COMPUTED (NOTES 1,4 & 6) ..... T1: FT.
T2: N/A FT.

UAX PICKUP DELAY (UAX 1) (0 = OFF) ..... 10 SEC.

ENA / UAX2 DELAY (0 = ENA) ..... 0 SEC.

ISLAND DISTANCE (BETWEEN ISLAND TRACK WIRE CONNECTIONS) (NOTES 2,4 & 6) ..... T1: 120 FT.
T2: N/A FT.

NUMBER OF DAXS ..... 0 ☑ 1 ☐ 2 ☐ 3 ☐ 4 ☐

DAX A TRACK ASSIGNMENT ..... T1 ☐ T2 ☐

DAX A DISTANCE (0 = PREEMPT) (NOTES 2,4 & 6) ..... N/A FT.

DAX A WARNING TIME ..... N/A SEC.

DAX B TRACK ASSIGNMENT ..... T1 ☐ T2 ☐

DAX B DISTANCE (0 = PREEMPT) (NOTES 2,4 & 6) ..... N/A FT.

DAX B WARNING TIME ..... N/A SEC.

DAX C TRACK ASSIGNMENT ..... T1 ☐ T2 ☐

DAX C DISTANCE (0 = PREEMPT) (NOTES 2,4 & 6) ..... N/A FT.

DAX C WARNING TIME ..... N/A SEC.

DAX D TRACK ASSIGNMENT ..... T1 ☐ T2 ☐

DAX D DISTANCE (0 = PREEMPT) (NOTES 2,4 & 6) ..... N/A FT.

DAX D WARNING TIME ..... N/A SEC.

SLAVING MASTER/SLAVE ..... MASTER ☑ SLAVE ☐

PASSWORD ENABLED ..... DISABLED ☐ ENABLED ☑

RECORDER INSTALLED ..... NOT INSTALLED ☐ INSTALLED ☑

RS-232-C BAUD RATE ..... BPS

RS-232-C DATA BITS ..... 7 ☐ 8 ☐

RS-232-C STOP BITS ..... 1 ☐ 2 ☐

RS-232-C PARITY ..... NONE ☐ MARK ☐ ODD ☐ SPACE ☐ EVEN ☐

DATE (E.G., MON 16 NOV 1987) (NOTE 2) .....

TIME (E.G., 11:25:43 AM) (NOTE 2) .....

DAYLIGHT SAVINGS ..... ON ☑ OFF ☐

■ PRESS FUNCTION KEY

SWITCH TO MS (ENTER EZ VALUE) (NOTES 2,4 & 5) ..... T1: 8 EZ
T2: N/A EZ

TRANSFER DELAY MS TO GCP (0 = OFF) ..... T1: 0 SEC.
T2: N/A SEC.

PRIME PREDICTION OFFSET (0 = OFF) (NOTES 2,4 & 6) ..... T1: 0 FT.
T2: N/A FT.

PICKUP DELAY PRIME ..... AUTOMATIC ☐ FIXED ☑ 30 SEC.

PICKUP DELAY DAX A ..... AUTOMATIC ☐ FIXED ☐ N/A SEC.

PICKUP DELAY DAX B ..... AUTOMATIC ☐ FIXED ☐ N/A SEC.

PICKUP DELAY DAX C ..... AUTOMATIC ☐ FIXED ☐ N/A SEC.

PICKUP DELAY DAX D ..... AUTOMATIC ☐ FIXED ☐ N/A SEC.

COMPENSATION VALUE (NOTES 3 & 4) T1:

COMPENSATION VALUE (NOTES 3 & 4) ..... T2: N/A

ENHANCED DETECTION (NOTES 6 & 9) ..... T1: ON ☑ OFF ☐

ENHANCED DETECTION (NOTES 6 & 9) ..... T2: ON ☐ OFF ☐

BACK TO BACK T1 & T2 (WHEN ENHANCED DETECTION IS ON) NO ☑ YES ☐

STATION STOP TIMER (WHEN ENHANCED DETECTION IS ON) T1: 10 SEC.
T2: N/A SEC.

NUMBER OF TRACK WIRES ..... T1: 4 ☑ 6 ☐

NUMBER OF TRACK WIRES ..... T2: 4 ☐ 6 ☐

LOW EX ADJUSTMENT (NOTES 2,4,6 & 7) ..... T1: EX
T2: N/A EX

LOW EZ DETECTION ..... T1: ON ☐ OFF ☑
T2: ON ☐ OFF ☐

LOW EZ DETECTION TIMER (WHEN LOW EZ DETECTION IS ON) T1: N/A MIN.
T2: N/A MIN.

POSITIVE START (0 = OFF) (ENTER EZ VALUE) (NOTES 2,4 & 10) ..... T1: EZ
T2: N/A EZ

POSITIVE START TIMEOUT (0 = NONE) ..... T1: 0 MIN.
T2: N/A MIN.

SET "AT" OPERATION ..... NORMAL ☑ DIAGNOSTIC ☐

DIAGNOSTIC MESSAGES ..... ON ☐ OFF ☑

DAX MESSAGES ..... ON ☐ OFF ☑

ADVANCE PREEMPT TIMER ..... 0 SEC.

EXPANDED PROGRAMMING

1) COMPUTED BY SYSTEM DURING CALIBRATION

2) PROGRAMMED AT INSTALLATION DURING CALIBRATION PROCEDURE

3) THE COMPENSATION VALUE IS PROVIDED BY THE 3000 GCP SYSTEM AND NO ADDITIONAL PROGRAMMING IS NORMALLY REQUIRED. DO NOT CHANGE VALUE WITHOUT PROPER INSTRUCTION

4) INDICATE READING OR SELECTION IN SPACE PROVIDED

5) EACH CONSTANT WARNING DEVICE SYSTEM TO BE PROGRAMMED TO CONVERT TO A MOTION SENSOR 300 FEET FROM EDGE OF ROAD TRAVELLED WAY.
SHUNT TRACK 300 FEET FROM EDGE OF ROAD TRAVELLED WAY AND NOTE "EZ" VALUE.
PROGRAM EACH SYSTEM WITH THE INDICATED "EZ" VALUE +2.

6) REFER TO MODEL 3000 GCP INSTRUCTION AND INSTALLATION MANUAL FOR PROGRAMMING PARAMETERS.

7) "LOW EX" THRESHOLD IS FACTORY PRESET AND NO ADDITIONAL PROGRAMMING IS NORMALLY REQUIRED.

IMPROPER REDUCTION OF THE "LOW EX" THRESHOLD MAY CAUSE REDUCTION IN WARNING TIME.

DO NOT CHANGE VALUE WITHOUT PROPER INSTRUCTION.

8) T1-ISLAND FREQUENCY TO BE PROGRAMMED AT 8.3 KHz
T2-ISLAND FREQUENCY TO BE PROGRAMMED AT N/A KHz

9) SET UP APPROACH LENGTH AND LINEARIZATION CALIBRATION
VERIFY THAT "ENHANCED DETECTION" MODE IS PROGRAMED "OFF" BEFORE ATTEMPTING LINEARIZATION PROCEDURES.

10) EACH CONSTANT WARNING DEVICE SYSTEM TO BE PROGRAMMED USING POSITIVE START FUNTION.
SHUNT TRACK 300 FEET FROM EDGE OF ROAD TRAVELLED WAY AND NOTE "EZ" VALUE.
PROGRAM THE SYSTEM WITH THE INDICATED "EZ" VALUE.

11) GCP/MS NODES MUST BE INSTALLED ON THE SEA/R BEFORE RECORDER MODULE 80255 CAN BE INSTALLED.

CALIBRATION HISTORY

		CALIBRATION HISTORY				LINEARIZATION HISTORY (NOTE 9)									
		EZ/EX VALUES (TRACK UNOCCUPIED)				HARDWIRE SHUNT AT TERMINATION SHUNT				HARD WIRE SHUNT AT 50 PERCENT POINT OF SHUNT					
		EZ		EX		EZ VALUE		50 PERCENT OF EZ VALUE		NO LINEARIZATION		LINEARIZATION COMPLETE			
										EZ VALUE		STEP±		EZ	
		NORMAL	STANDBY	NORMAL	STANDBY	NORMAL	STANDBY	NORMAL	STANDBY	NORMAL	STANDBY	NORMAL	STANDBY	NORMAL	STANDBY
EAST	TRACK 1		N/A		N/A		N/A		N/A		N/A		N/A		N/A
WEST	TRACK 1		N/A		N/A		N/A		N/A		N/A		N/A		N/A
EAST	TRACK 2	N/A	N/A	N/A	N/A	N/A	N/A	N/A	N/A	N/A	N/A	N/A	N/A	N/A	N/A
WEST	TRACK 2	N/A	N/A	N/A	N/A	N/A	N/A	N/A	N/A	N/A	N/A	N/A	N/A	N/A	N/A

MICRO GCP WITH AUTOMATIC TRANSFER (1 TRACK)

PROPOSED D	PROPOSED M	PROPOSED Y	REVISIONS	D	C	COMPLETED D	COMPLETED M	COMPLETED Y	C
			AS INSTALLED			12	11	03	SAL

DIVISION GULF
SUB. CENTRALIA
SD. 1012 C
MP. 279.00 TO 279.74

SIGNALS AND COMMUNICATIONS MONTREAL
DES. CSM
CH. MSM
9 AUGUST 2002

GCP 3000ND2
PROGRAM DATA (MODULE #80214)
MAIN ST.(IL.14)
TAMAROA, IL

CEN-279.70-06

SAFETRAN SYSTEM CORP.
LOUISVILLE DIVISION, LOUISVILLE, KY

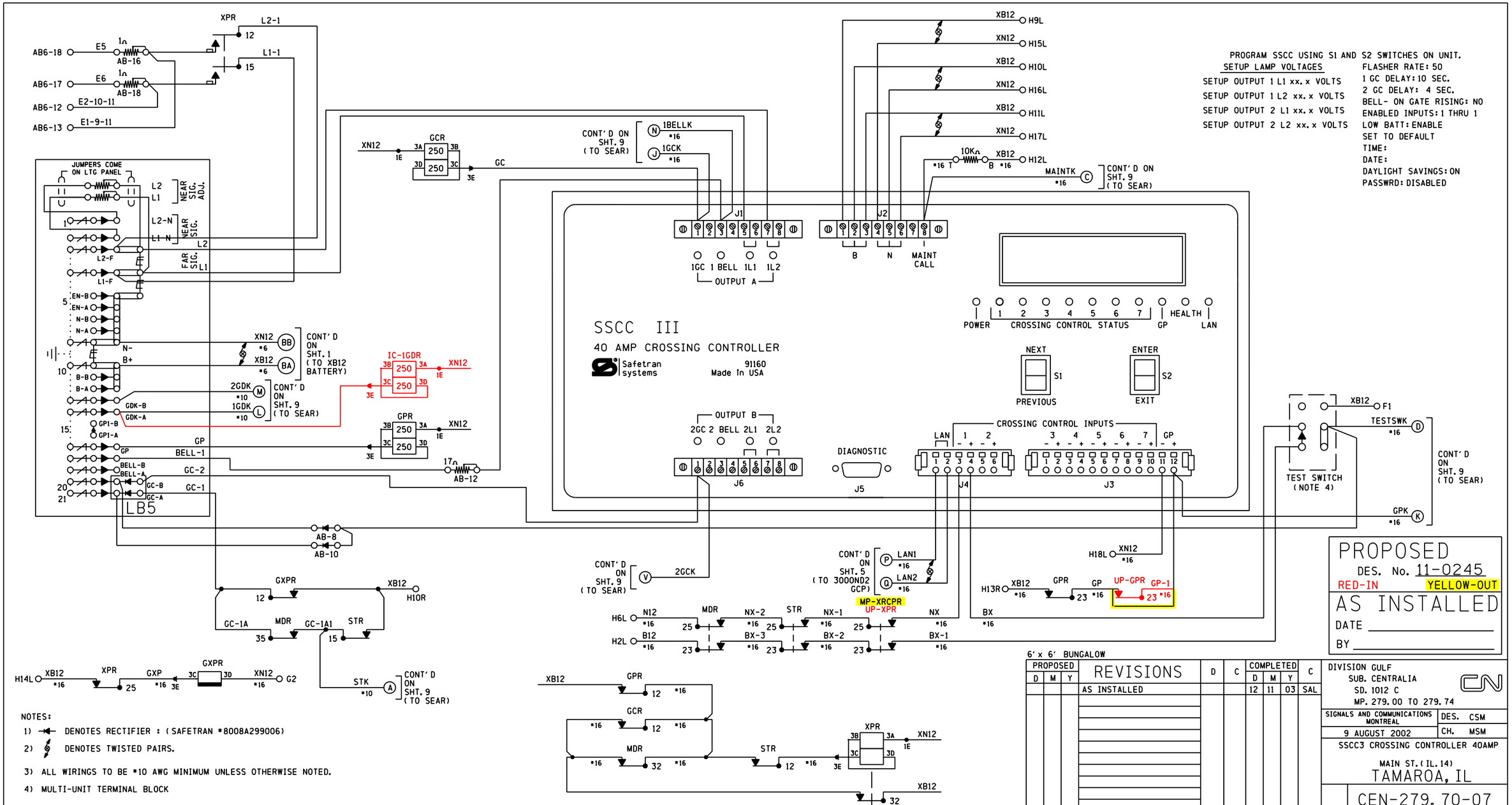
SSCC III
40 AMP CROSSING CONTROLLER
Safetran systems
91160
Made In USA
PROGRAM SSCC USING S1 AND S2 SWITCHES ON UNIT.
SETUP LAMP VOLTAGES
SETUP OUTPUT 1 L1 xx.x VOLTS
SETUP OUTPUT 1 L2 xx.x VOLTS
SETUP OUTPUT 2 L1 xx.x VOLTS
SETUP OUTPUT 2 L2 xx.x VOLTS
FLASHER RATE: 50
1 GC DELAY: 10 SEC.
2 GC DELAY: 4 SEC.
BELL- ON GATE RISING: NO
ENABLED INPUTS: 1 THRU 1
LOW BATT: ENABLE
SET TO DEFAULT
TIME:
DATE:
DAYLIGHT SAVINGS: ON
PASSWRD: DISABLED
JUMPERS COME ON LTG PANEL
LB5
OUTPUT A
OUTPUT B
POWER
CROSSING CONTROL STATUS
HEALTH
GP
LAN
NEXT
PREVIOUS
ENTER
EXIT
CROSSING CONTROL INPUTS
DIAGNOSTIC
TEST SWITCH (NOTE 4)
PROPOSED
DES. No. 11-0245
RED-IN
YELLOW-OUT
AS INSTALLED
DATE
BY
6' x 6' BUNGALOW
REVISIONS
AS INSTALLED
DIVISION GULF
SUB. CENTRALIA
SD. 1012 C
MP. 279.00 TO 279.74
SIGNALS AND COMMUNICATIONS MONTREAL
9 AUGUST 2002
DES. CSM
CH. MSM
SSCC3 CROSSING CONTROLLER 40AMP
MAIN ST. (IL.14)
TAMAROA, IL
CEN-279.70-07
SAFETRAN SYSTEM CORP.
LOUISVILLE DIVISION, LOUISVILLE, KY
NOTES:
1) DENOTES RECTIFIER : (SAFETRAN #8008A299006)
2) DENOTES TWISTED PAIRS.
3) ALL WIRINGS TO BE #10 AWG MINIMUM UNLESS OTHERWISE NOTED.
4) MULTI-UNIT TERMINAL BLOCK

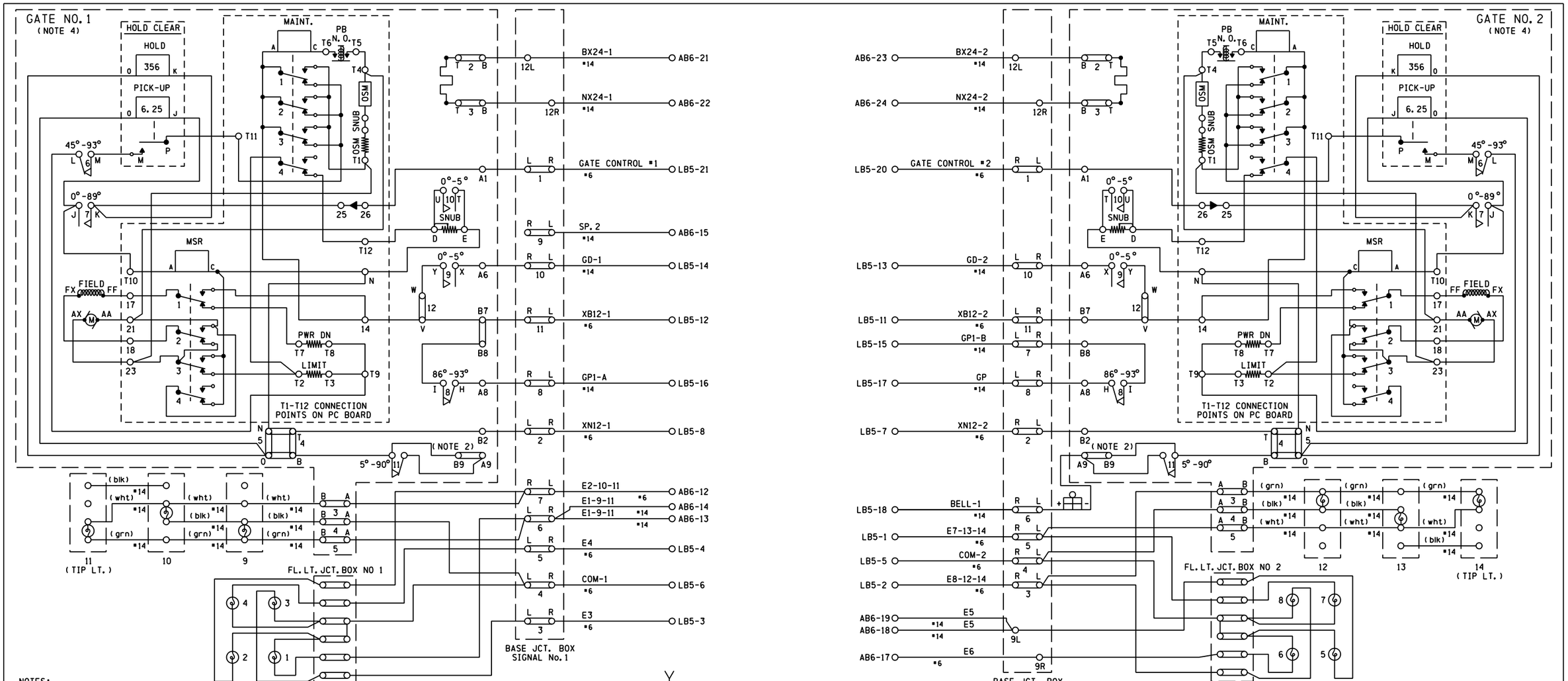

NOTES:

1) GATE No. 1 ADD STRAP BETWEEN B7 AND B8.

2) BELL CUT-OUT (5°-90°) WHEN REQUIRED REMOVE STRAP BETWEEN A9 AND B9.

3) ALL WIRINGS #10 AWG MINIMUM UNLESS OTHERWISE NOTED. WIRE SIZES SHOWN ARE MINIMUM GAUGE.

4) GATE DESCENT TIME (RELEASE FROM VERTICAL TO FULLY HORIZONTAL) TO BE WITHIN 12 SECONDS.

5) ADJACENT TRACK CLEARANCE TIME FOR UP/MOPAC IS 10 SECONDS.

PROPOSED			REVISIONS	D	C	COMPLETED			C
D	M	Y				D	M	Y	
			AS INSTALLED			12	11	03	SAL

DIVISION GULF
SUB. CENTRALIA
SD. 1012 C
MP. 279.00 TO 279.74

SIGNALS AND COMMUNICATIONS MONTREAL

DES. CSM
CH. MSM

9 AUGUST 2002

GATE MECHANISM CONTROL CIRCUITS

MAIN ST. (IL. 14)
TAMAROA, IL

CEN-279.70-08

SAFETRAN SYSTEM CORP.
LOUISVILLE DIVISION, LOUISVILLE, KY

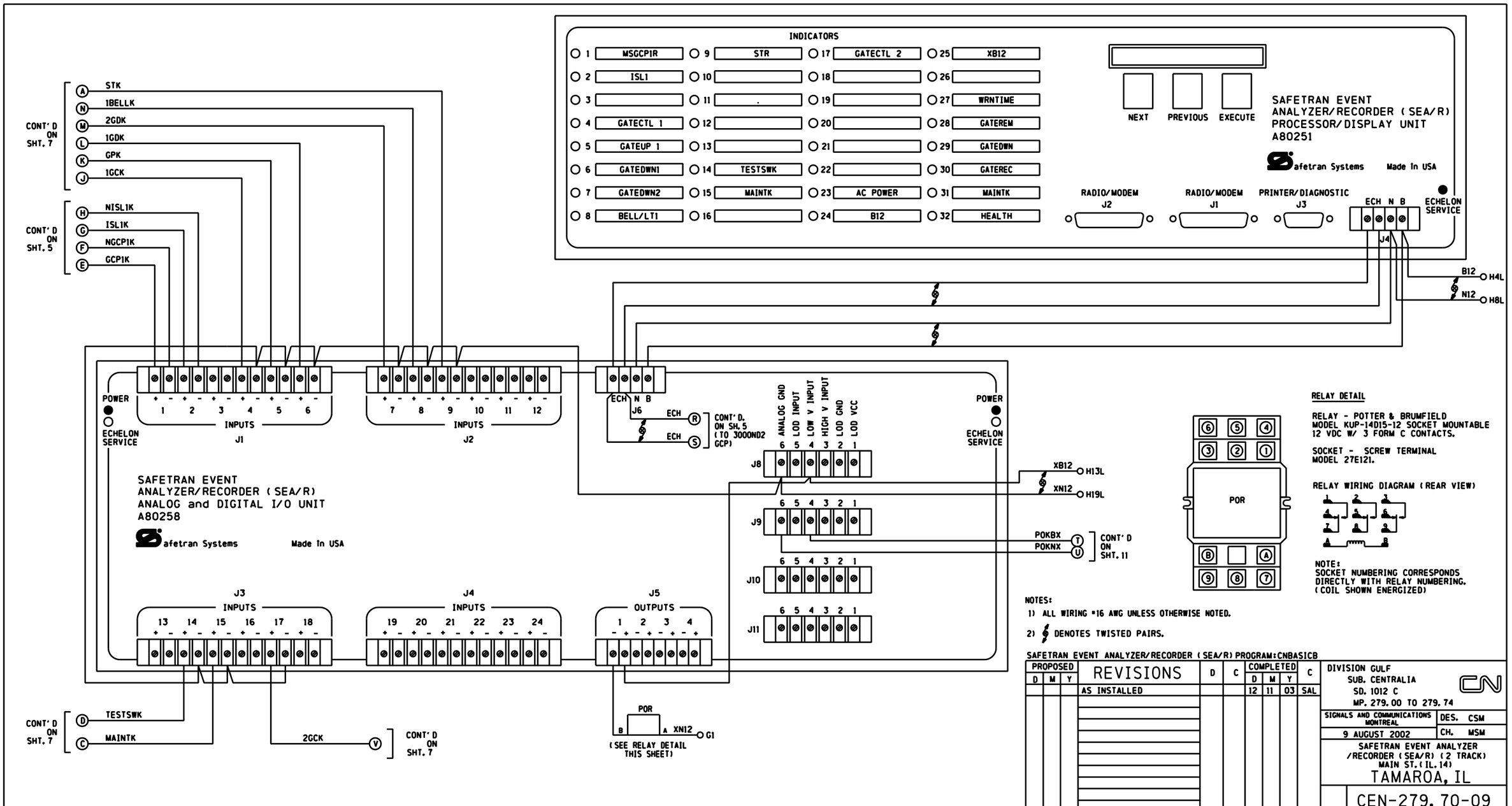
INDICATORS
1 MSGCP1R
2 ISL1
3
4 GATECTL 1
5 GATEUP 1
6 GATEDWN1
7 GATEDWN2
8 BELL/LT1
9 STR
10
11 .
12
13
14 TESTSWK
15 MAINTK
16
17 GATECTL 2
18
19
20
21
22
23 AC POWER
24 B12
25 XB12
26
27 WRNTIME
28 GATEREM
29 GATEDWN
30 GATEREC
31 MAINTK
32 HEALTH
NEXT
PREVIOUS
EXECUTE
SAFETRAN EVENT
ANALYZER/RECORDER (SEA/R)
PROCESSOR/DISPLAY UNIT
A80251
Safetran Systems
Made in USA
RADIO/MODEM J2
RADIO/MODEM J1
PRINTER/DIAGNOSTIC J3
ECH N B
J4
ECHELON SERVICE
B12 H4L
N12 H8L
CONT'D ON SHT. 7
A STK
N 1BELLK
M 2GDK
L 1GDK
K GPK
J 1GCK
CONT'D ON SHT. 5
H NISL1K
G ISL1K
F NGCP1K
E GCP1K
POWER
ECHELON SERVICE
1 2 3 4 5 6
INPUTS
J1
7 8 9 10 11 12
INPUTS
J2
ECH N B
J6
ECH R
ECH S
CONT'D. ON SH. 5 (TO 3000ND2 GCP)
ANALOG GND
LOD INPUT
LOW V INPUT
HIGH V INPUT
LOD GND
LOD VCC
J8
J9
J10
J11
XB12 H13L
XN12 H19L
POKBX T
POKNX U
CONT'D ON SHT. 11
SAFETRAN EVENT
ANALYZER/RECORDER (SEA/R)
ANALOG and DIGITAL I/O UNIT
A80258
Safetran Systems
Made in USA
J3
INPUTS
13 14 15 16 17 18
J4
INPUTS
19 20 21 22 23 24
J5
OUTPUTS
1 2 3 4
CONT'D ON SHT. 7
D TESTSWK
C MAINTK
2GCK V
CONT'D ON SHT. 7
POR
B A
XN12 G1
(SEE RELAY DETAIL THIS SHEET)
RELAY DETAIL
RELAY - POTTER & BRUMFIELD
MODEL KUP-14D15-12 SOCKET MOUNTABLE
12 VDC W/ 3 FORM C CONTACTS.
SOCKET - SCREW TERMINAL
MODEL 27E121.
RELAY WIRING DIAGRAM (REAR VIEW)
POR
NOTE:
SOCKET NUMBERING CORRESPONDS
DIRECTLY WITH RELAY NUMBERING.
(COIL SHOWN ENERGIZED)
NOTES:
1) ALL WIRING #16 AWG UNLESS OTHERWISE NOTED.
2) DENOTES TWISTED PAIRS.
SAFETRAN EVENT ANALYZER/RECORDER (SEA/R) PROGRAM:CNBASICB
PROPOSED D M Y
REVISIONS
AS INSTALLED
D C
COMPLETED D M Y C
12 11 03 SAL
DIVISION GULF
SUB. CENTRALIA
SD. 1012 C
MP. 279.00 TO 279.74
SIGNALS AND COMMUNICATIONS MONTREAL
DES. CSM
9 AUGUST 2002
CH. MSM
SAFETRAN EVENT ANALYZER /RECORDER (SEA/R) (2 TRACK)
MAIN ST. (IL. 14)
TAMAROA, IL
CEN-279.70-09
SAFETRAN SYSTEM CORP.
LOUISVILLE DIVISION, LOUISVILLE, KY

INITIALIZATION

MAIN MENU/CHANGE SETUP/BASIC SETUP

1. SET DATE AND TIME
2. INSTALL NODE

NODE	DEVICE
4	A80254 DIGITAL I/O [7]
5	A80259 ANALOG I/O [7]
6-8	(RESERVED FOR MS/GCP MAIN UNITS) [8]
16-18	(RESERVED FOR MS/GCP STBY UNITS) [8]

GCP/MS NODES MUST BE INSTALLED ON THE SEA/R BEFORE RECORDER MODULE 80255 CAN BE INSTALLED.

3. SETUP ALL LODs [9]
4. CUSTOM TIMERS (OPTIONAL)

WRNTIME ..... 21 SEC.
GATEREM ..... 30 MIN.
GATEDWN ..... 20 SEC.
GATEREC ..... 20 SEC.
MAINTK ..... 30 SEC.

MAIN MENU/CUSTOM FUNCTIONS

ENABLE/DISABLE ALL ALARMS

MAIN MENU/CHANGE SETUP/ADVANCED SETUP

SITE IDENTIFICATION

NOTES:

[1] WIRE THIS INPUT HIGH IF INPUT IS NOT USED AND USER WANTS LED EXTINGUISHED.

[2] DEFAULT TIMER VALUE.

[3] THIS ALARM WILL AUTOMATICALLY DETECT IF AC VOLTAGE PRESENT AT J9 IS OUTSIDE 6-12 VAC RANGE.

[4] THIS ALARM WILL AUTOMATICALLY DETECT THE PRESENCE OF SECOND TRACK ISLAND.

[5] THIS ALARM WILL AUTOMATICALLY BE ENABLED WHEN THE I/O NODES ARE INSTALLED FOR THE FIRST TIME.

[6] TO BE COMPLETED DURING INITIALIZATION.

[7] LOGIC IS DISABLED UNTIL NODES 4 AND 5 ARE INSTALLED.

[8] MS/GCP UNIT MUST BE EQUIPPED WITH THE PROPER INTERFACE MODULE, 80255 EXTERNAL DATA RECORDER INTERFACE, OR 80265 RETRO EXTERNAL DATA RECORDER INTERFACE.

[9] ONLY IF LODs ARE IN USE.

[10] IF CONNECTION IS UNUSED, LEAVE INPUT CONNECTION OPEN. INDICATORS ARE NORMALLY 'ON' IF CONNECTION IS USED.

• REPRESENTS AN INVERTED STATUS (INACTIVE OR LOW STATE INDICATED BY LIGHTED LED).

UNLESS NOTED OTHERWISE, LOW INPUTS NO LONGER NEED TO BE WIRED HIGH IF NOT USED. CNBASICB HAS ADDED A FEATURE TO DETECT THE USE OF THESE INPUTS.

INPUTS [10]

DIGITAL INPUT FEATURE	INDICATOR LABEL ON A80251	NORMAL LOGIC STATE	INPUT CONNECTION ON A 80258	A80251 INDICATOR
MS/GCP1 RELAY	MSGCP1R	HIGH	J1 INPUT 1	1
ISLAND 1	ISL1	HIGH	J1 INPUT 2	2
XR	XR	HIGH	J1 INPUT 3	3
GATE CONTROL 1	GATECTL1	HIGH	J1 INPUT 4	4
GATE UP 1	GATEUP1	HIGH	J1 INPUT 5	5
GATE DOWN 1	•GATEDWN1	LOW	J1 INPUT 6	6
GATE DOWN 2	•GATEDWN2	LOW	J2 INPUT 7	7
BELL/LIGHTS 1	•BELL/LT1	LOW	J2 INPUT 8	8
MS/GCP2 RELAY	MSGCP2R	HIGH	J2 INPUT 9	9
ISLAND 2	ISL2	HIGH	J2 INPUT 10	10
GATE DOWN 3	•GATEDWN3	LOW	J2 INPUT 11	11
GATE DOWN 4	•GATEDWN4	LOW	J2 INPUT 12	12
BELL/LIGHTS 2	•BELL/LT2	LOW	J3 INPUT 13	13
TEST SWITCH	•TESTSWK	LOW	J3 INPUT 14	14
MAINTAIN CALL	•MAINTK	LOW	J3 INPUT 15	15
MAIN/STANDBY XFER	MAINSTB	HIGH	J3 INPUT 16	16
GATE CONTROL 2	GATECTL2	HIGH	J3 INPUT 17	17
GATE UP 2	GATEUP2	HIGH	J3 INPUT 18	18
SPARE 1	•SPARE 1	LOW	J4 INPUT 19	19
TWPR	TWPK	HIGH	J4 INPUT 20	20
SPARE 3	SPARE 3	HIGH	J4 INPUT 21	21
SPARE 4	SPARE 4	HIGH	J4 INPUT 22	22
(UNUSED)	(N/A)	(N/A)	J4 INPUT 23	(N/A)
(UNUSED)	(N/A)	(N/A)	J4 INPUT 24	(N/A)

DIGITAL OUTPUTS	INDICATOR LABEL	NORM LOGIC STATE	OUTPUT CONNECTION ON A80258
POR	(N/A)	HIGH	J5 OUTPUT 1
(UNUSED)	(N/A)	(N/A)	J5 OUTPUT 2
(UNUSED)	(N/A)	(N/A)	J5 OUTPUT 3
(UNUSED)	(N/A)	(N/A)	J5 OUTPUT 4

ANALOG INPUT FEATURE	INDICATOR LABEL ON A80251	RANGE	INPUT CONNECTION ON A80258
LIGHT BATTERY VOLTAGE	LITEBAT (XB12)	0-36VDC	J8 INPUT 4(+) & 6(-)
8.8 VAC POWER	8.8VAC	0-36VAC$_{PEAK}$	J9 INPUT 4(+) & 6(-)
SYSTEM BATTERY (B12-1)	BATTERY (B12-1)	0-36VDC	J10 INPUT 4(+) & 6(-)
BATTERY VOLTAGE	BATTERY (B12)	0-34VDC	INTERNAL
TEMPERATURE	TEMP	-40 TO +160 F	INTERNAL

ALARMS

ALARM DESCRIPTION	INDICATOR LABEL ON A80251	CONDITION INDICATED	A80251 INDICATOR	REQUIRED INPUTS	ENABLED [6]
AC POWER ALARM [3]	AC POWER	POWER INPUT IS OUTSIDE OF VOLTAGE RANGE (6-12 VRMS)	23	J9	NO ☐ YES ☑
SYSTEM BATTERY ALARM (B12)	BATTERY (B12)	POWER TO THE SEA/R IS OUTSIDE OF VOLTAGE RANGE (9.5-18 VDC)	24	(N/A)	NO ☐ YES ☑
LIGHT BATTERY ALARM	LITEBAT (XB12)	LIGHT BATTERY IS OUTSIDE OF VOLTAGE RANGE (11-18VDC)	25	J8	NO ☐ YES ☑
SYSTEM BATTERY ALARM (B12-1)	BATTERY (B12-1)	POWER TO THE SEA/R IS OUTSIDE OF VOLTAGE RANGE (9.5-18 VDC)	26	J10	NO ☑ YES ☐
SHORT WARNING TIME TRACK 1 OR 2 ALARM [4]	WRNTIME	LESS THAN 20 SECONDS [2] FROM BELL/LT TO ISL1R OR ISL2R	27	BELL/LIGHT1, BELL/LIGHT2, ISL1R AND/ OR ISL2R	NO ☐ YES ☑
GATE REMAINS DOWN ALARM	GATEREM	GATEDWN INPUT ENERGIZED FOR MORE THAN 30 MINUTES [2]	28	GATEDWN1, GATEDWN2, GATEDWN3, GATEDWN4	NO ☐ YES ☑
GATE NOT DOWN ALARM	GATEDWN	GATEDWN INPUT LOW FOR MORE THAN 20 SECONDS [2] AFTER GATECTL HAS DE-ENERGIZED	29	GATEDWN1, GATEDWN2, GATEDWN3, GATEDWN4, GATECTL1, AND/ OR GATECTL2	NO ☐ YES ☑
GATE NOT RECOVERED ALARM	GATEREC	GATEUP LOW MORE THAN 20 SECONDS [2] AFTER GATECTL HAS ENERGIZED	30	GATEUP1 AND/ OR GATEUP2, GATECTL1, AND/ OR GATECTL2	NO ☐ YES ☑
MAINTAIN CALL ALARM	MAINTK	MAINTK ENERGIZED FOR MORE THAN 30 SECONDS [2] (SSCC3 FAILURE ALARM)	31	MAINTK	NO ☐ YES ☑
HEALTH/STATUS ALARM [5]	HEALTH	I/O NODES OFFLINE FOR MORE THAN 1 MINUTE (SEAR FAILURE ALARM)	32	(N/A)	NO ☐ YES ☑

SAFETRAN EVENT ANALYZER/RECORDER (SEAR) PROGRAM:CNBASICB

PROPOSED D	PROPOSED M	PROPOSED Y	REVISIONS	D	C	COMPLETED D	COMPLETED M	COMPLETED Y	C
			AS INSTALLED			12	11	03	SAL

DIVISION GULF
SUB. CENTRALIA
SD. 1012 C
MP. 279.00 TO 279.74

SIGNALS AND COMMUNICATIONS MONTREAL
DES. CSM
CH. MSM
9 AUGUST 2002

SEA/R
PROGRAM DATA
MAIN ST.(IL.14)
TAMAROA, IL

CEN-279.70-10

SAFETRAN SYSTEM CORP.
LOUISVILLE DIVISION, LOUISVILLE, KY

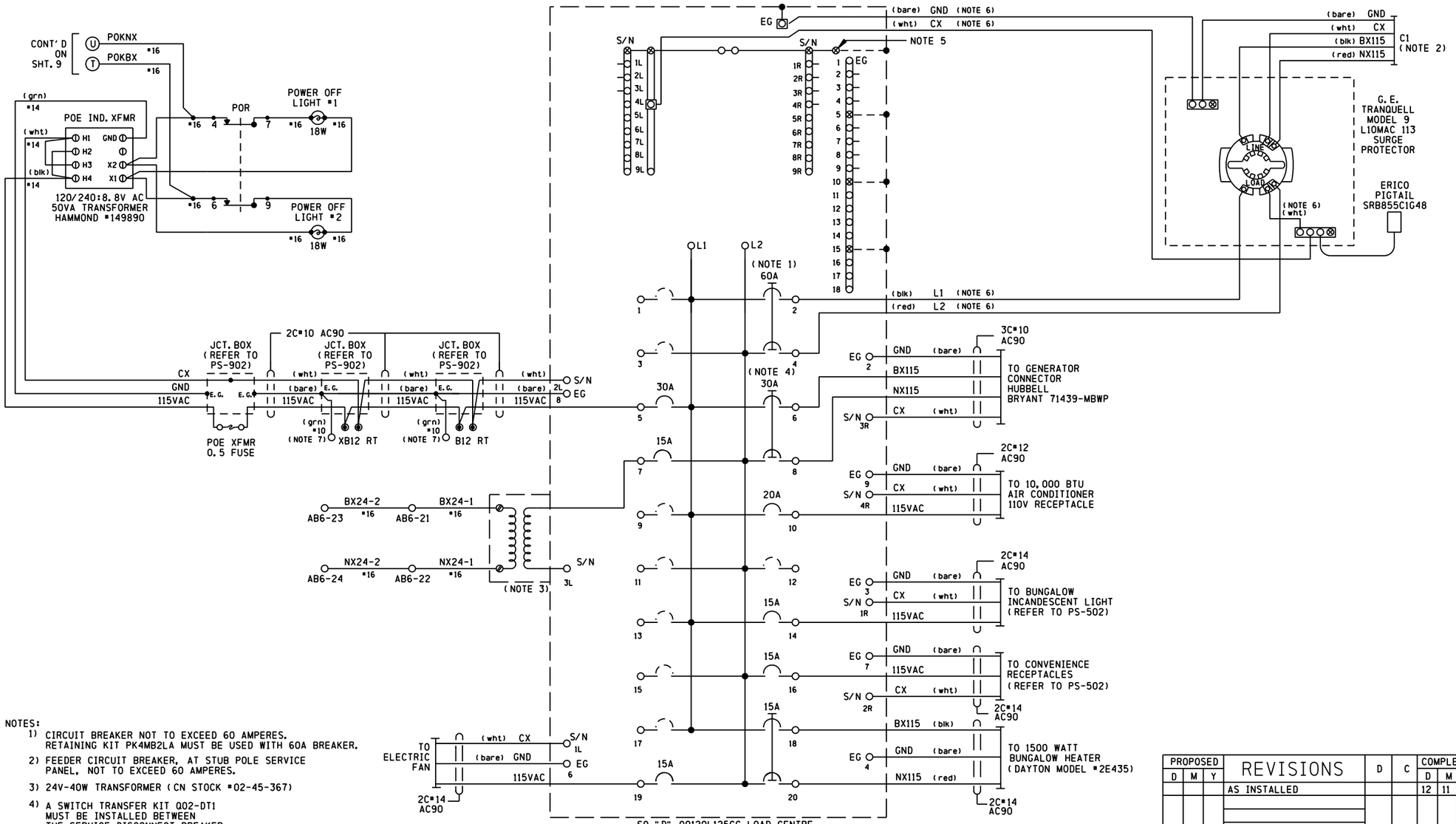

NOTES:

1) CIRCUIT BREAKER NOT TO EXCEED 60 AMPERES. RETAINING KIT PK4MB2LA MUST BE USED WITH 60A BREAKER.
2) FEEDER CIRCUIT BREAKER, AT STUB POLE SERVICE PANEL, NOT TO EXCEED 60 AMPERES.
3) 24V-40W TRANSFORMER (CN STOCK #02-45-367)
4) A SWITCH TRANSFER KIT Q02-DT1 MUST BE INSTALLED BETWEEN THE SERVICE DISCONNECT BREAKER AND THE GENERATOR HOOK UP.
5) REMOVE BONDING SCREW. THE BONDING SCREW IS BRASS COLORED (REFER TO SCHEMATIC ON BOX COVER FOR EXACT LOCATION).
6) S.C. #6 STRANDED, CSA TYPE R90 (X-LINK).
7) GROUND LUG LOCATED IN CHARGER HOUSING.

PROPOSED			REVISIONS	D	C	COMPLETED			C
D	M	Y				D	M	Y	
			AS INSTALLED			12	11	03	SAL

DIVISION GULF
SUB. CENTRALIA
SD. 1012 C
MP. 279.00 TO 279.74

SIGNALS AND COMMUNICATIONS MONTREAL

DES. CSM
CH. MSM

9 AUGUST 2002

POWER DISTRIBUTION

MAIN ST. (IL.14)
TAMAROA, IL

CEN-279.70-11

SAFETRAN SYSTEM CORP.
LOUISVILLE DIVISION, LOUISVILLE, KY