APPROACH LENGTHS ALLOW FOR:	
TIME IN SECONDS	CWT E.B./W.B. APPROACH
STANDARD MUTCD MIN. TIME	20
DESIGNED WARNING TIME	30
EQUIPMENT RESPONSE TIME	5
TOTAL TIME	30
MAX. SPEED (M.P.H.)	50
APPROACH DISTANCE (FEET)	2205

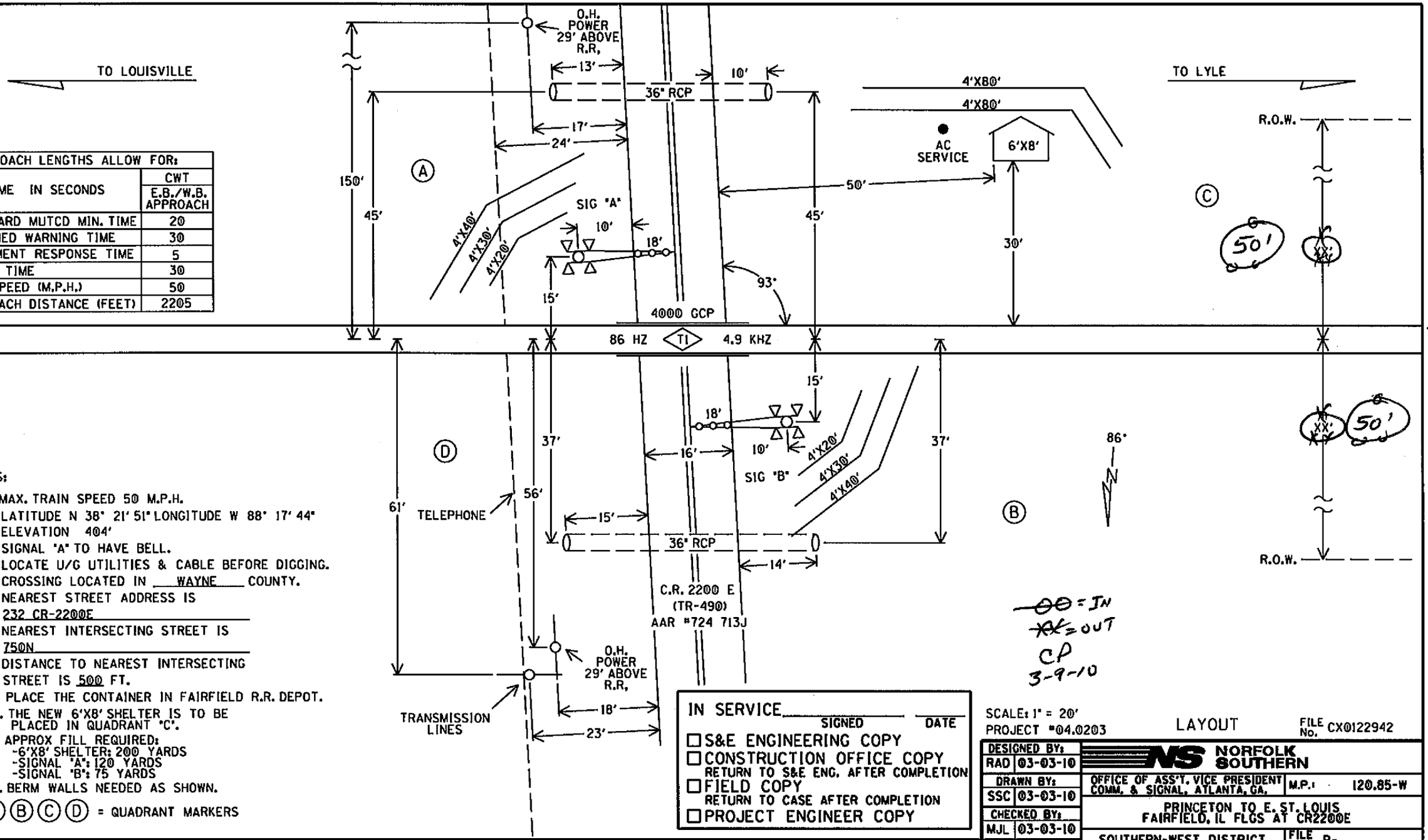

NOTES:

1. MAX. TRAIN SPEED 50 M.P.H.
2. LATITUDE N 38° 21' 51" LONGITUDE W 88° 17' 44" ELEVATION 404'
3. SIGNAL "A" TO HAVE BELL.
4. LOCATE U/G UTILITIES & CABLE BEFORE DIGGING.
5. CROSSING LOCATED IN WAYNE COUNTY.
6. NEAREST STREET ADDRESS IS 232 CR-2200E
7. NEAREST INTERSECTING STREET IS 750N
8. DISTANCE TO NEAREST INTERSECTING STREET IS 500 FT.
9. PLACE THE CONTAINER IN FAIRFIELD R.R. DEPOT.
10. THE NEW 6'X8' SHELTER IS TO BE PLACED IN QUADRANT "C".
11. APPROX FILL REQUIRED:
    - 6'X8' SHELTER: 200 YARDS
    - SIGNAL "A": 120 YARDS
    - SIGNAL "B": 75 YARDS
12. BERM WALLS NEEDED AS SHOWN.

(A) (B) (C) (D) = QUADRANT MARKERS

IN SERVICE _____ SIGNED _____ DATE

- ☐ S&E ENGINEERING COPY
- ☐ CONSTRUCTION OFFICE COPY
  RETURN TO S&E ENG. AFTER COMPLETION
- ☐ FIELD COPY
  RETURN TO CASE AFTER COMPLETION
- ☐ PROJECT ENGINEER COPY

SCALE: 1" = 20'
PROJECT #04.0203

LAYOUT

FILE No. CX0122942

DESIGNED BY:	
RAD	03-03-10
DRAWN BY:	
SSC	03-03-10
CHECKED BY:	
MJL	03-03-10
IN SERVICE:	
	- -

NORFOLK SOUTHERN

OFFICE OF ASS'T. VICE PRESIDENT COMM. & SIGNAL, ATLANTA, GA.

M.P.: 120.85-W

PRINCETON TO E. ST. LOUIS
FAIRFIELD, IL FLGS AT CR2200E

SOUTHERN-WEST DISTRICT

FILE No. R-

CADD or DWG. No. SE0148P.01

SHEET No. 1 of 22

REVISION INITIALS

PROPERTY
NORFOLK SOUTHERN RAILWAY CO.

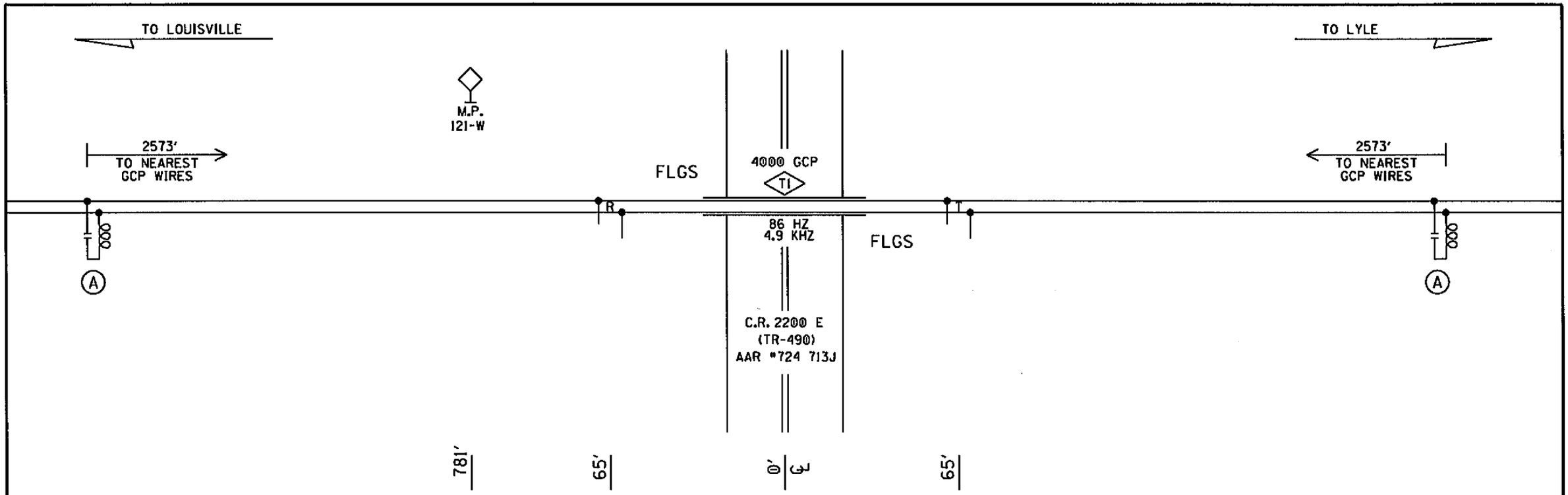

(A)- MF-NBS 62775-8621 (86HZ)

PROFILE

DESIGNED BY: RAD 03-03-10	NORFOLK SOUTHERN	
DRAWN BY: SSC 03-03-10	OFFICE OF ASS'T. VICE PRESIDENT COMM. & SIGNAL, ATLANTA, GA.	M.P.: 120.85-W
CHECKED BY: MJL 03-03-10	PRINCETON TO E. ST. LOUIS FAIRFIELD, IL FLGS AT CR2200E	
IN SERVICE: - -	SOUTHERN-WEST DISTRICT	FILE No. R-
	CADD or DWG. No. SE0148P.02	SHEET No. 2 of 22

REVISION INITIALS

PROPERTY
NORFOLK SOUTHERN RAILWAY CO.

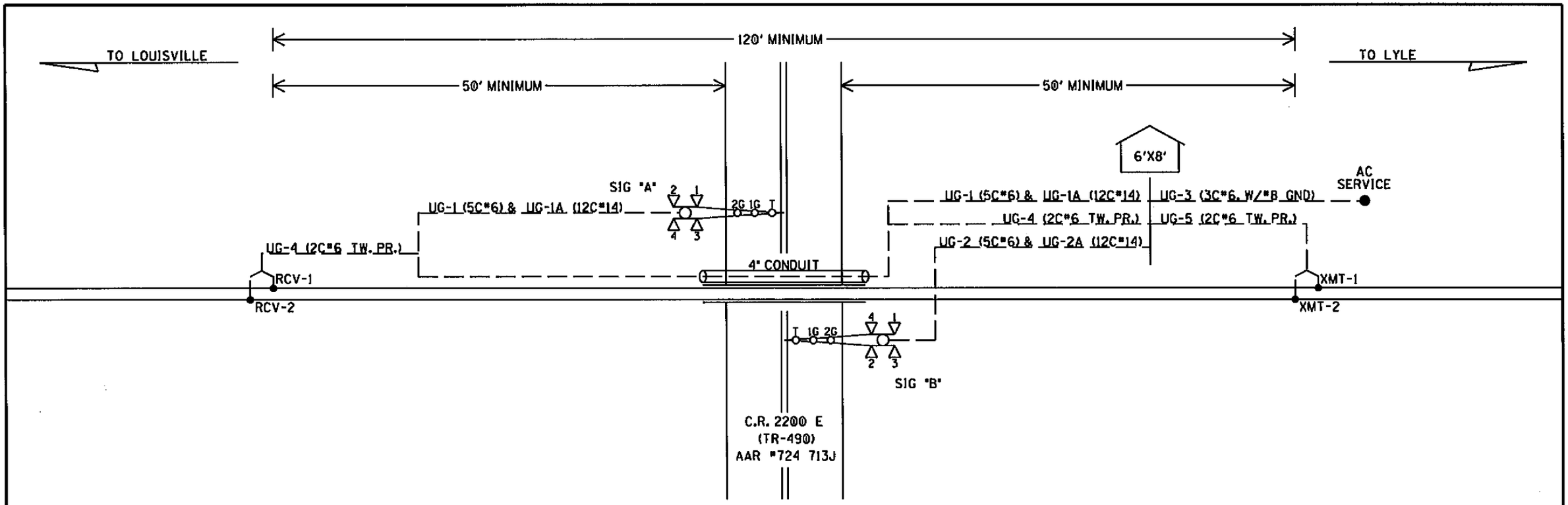

UG-1-5CUG #6
AEC
AEZ
AEB
B16-A
N16-A

UG-2-5CUG #6
BEC
BEZ
BEB
B16-B
N16-B

UG-1A-12CUG #14
AXG
NAXG
AXX
1AXX
XGP1
AMTSS
AGD
AGBX120
AGNX120
SPARE
SPARE

UG-2A-12CUG #14
BXG
NBXG
BXX
1BXX
XGP1
XGP
BMTSS
BGD
BGBX120
BGNX120
SPARE
SPARE

UG-3-3CUG #6 W/#8 GND
BX120-A
BX120-B
NX120
GND

UG-4-TW. PR. #6
RCV-1
RCV-2

UG-5-TW. PR. #6
XMT-1
XMT-2

CABLE PLAN

DESIGNED BY: RAD 03-03-10	NORFOLK SOUTHERN	
DRAWN BY: SSC 03-03-10	OFFICE OF ASS'T. VICE PRESIDENT COMM. & SIGNAL, ATLANTA, GA.	M.P.: 120.85-W
CHECKED BY: MJL 03-04-10	PRINCETON TO E. ST. LOUIS FAIRFIELD, IL FLGS AT CR2200E	
IN SERVICE: - -	SOUTHERN-WEST DISTRICT	FILE No. R-
	CADD or DWG. No. SE0148P.03	SHEET No. 3 of 22

REVISION INITIALS

PROPERTY
NORFOLK SOUTHERN RAILWAY CO.

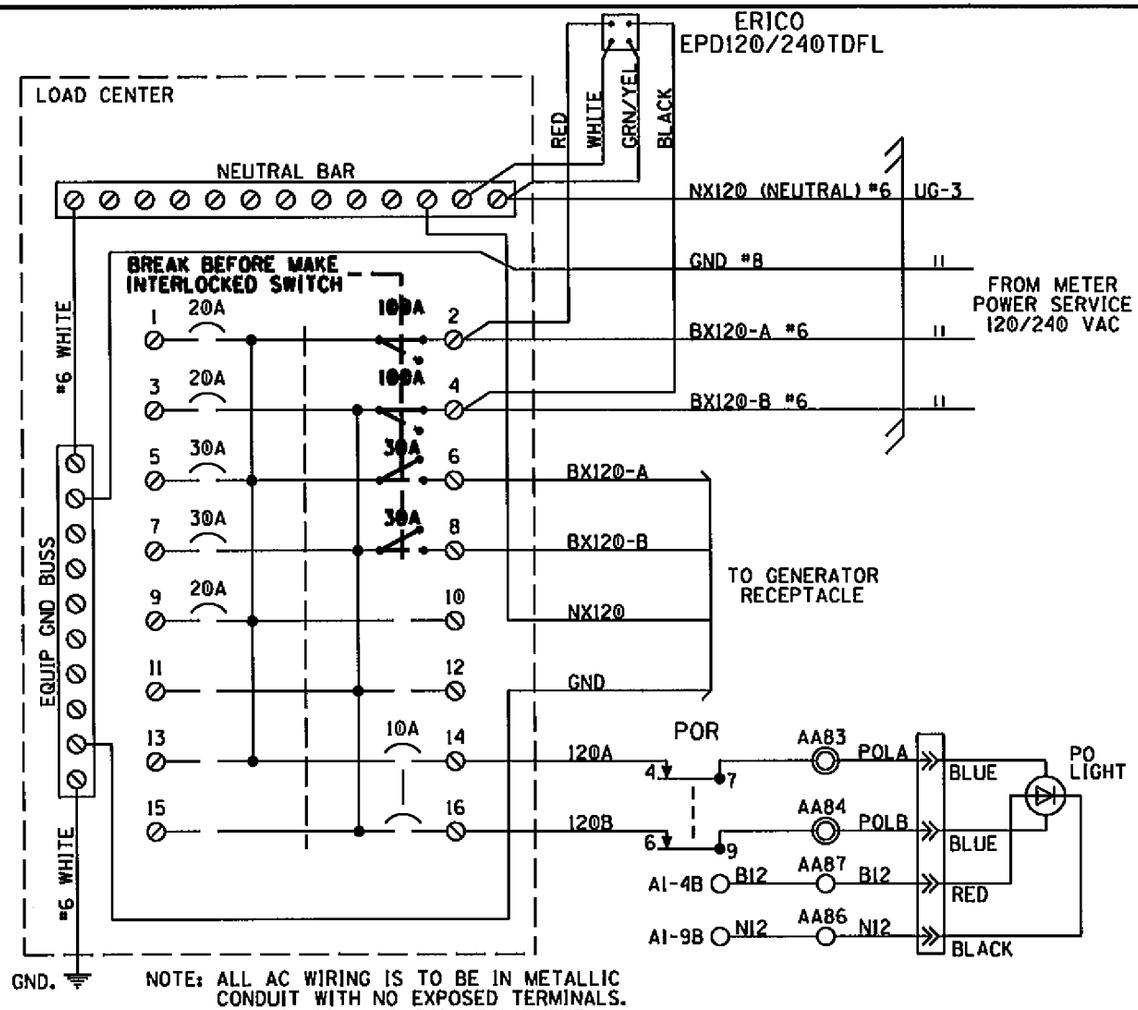

NOTE: ALL AC WIRING IS TO BE IN METALLIC CONDUIT WITH NO EXPOSED TERMINALS. ALL AC 120V AND 240V EQUIPMENT IS TO BE PROPERLY GROUNDED.

SQUARE 'D' PART NUMBERS:

LOAD CENTER——Q0116L125G
10A 1P CIR BKR——Q0110
10A 2P CIR BKR——Q0210
20A 1P CIR BKR——Q0120
30A 1P CIR BKR——Q0130
30A 2P CIR BKR——Q0230
60A 2P CIR BKR——Q0260
100A 2P CIR BKR——Q02100
MECH INTERLOCK——PK4DTIM4LA

GENERATOR RECEPTACLE:
MALE CONNECTOR - NEMA L1430-FI

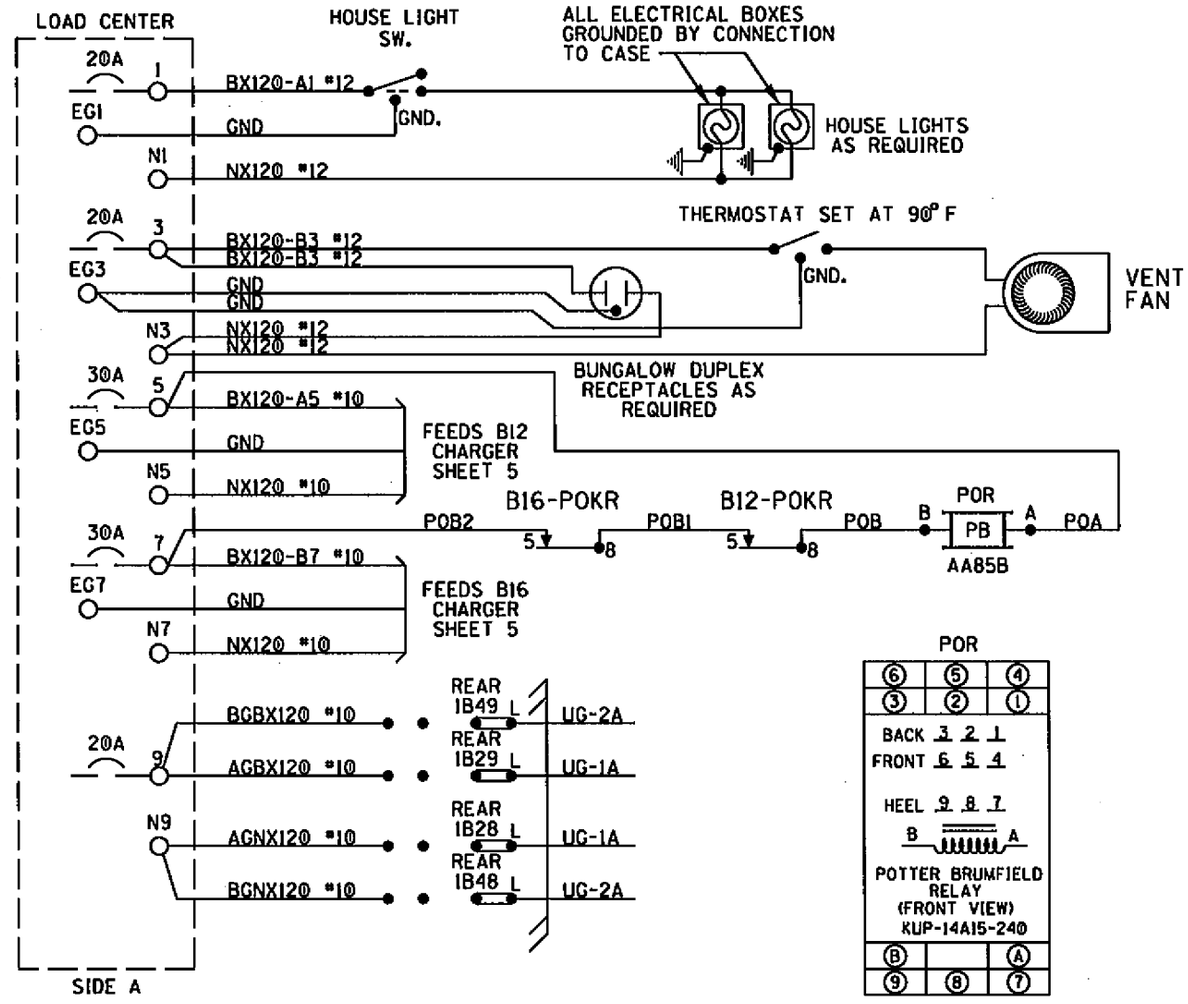

LOAD CENTER WIRING

DESIGNED BY: RAD 03-03-10	NORFOLK SOUTHERN	
DRAWN BY: SSC 03-03-10	OFFICE OF ASS'T. VICE PRESIDENT COMM. & SIGNAL, ATLANTA, GA.	M.P.: 120.65-W
CHECKED BY: MJL 03-04-10	PRINCETON TO E. ST. LOUIS FAIRFIELD, IL FLGS AT CR2200E	
IN SERVICE: " "	SOUTHERN-WEST DISTRICT	FILE No. R-
	CADD or DWG. No. SE0148P.04	SHEET No. 4 of 22

REVISION INITIALS

PROPERTY
NORFOLK SOUTHERN RAILWAY CO.

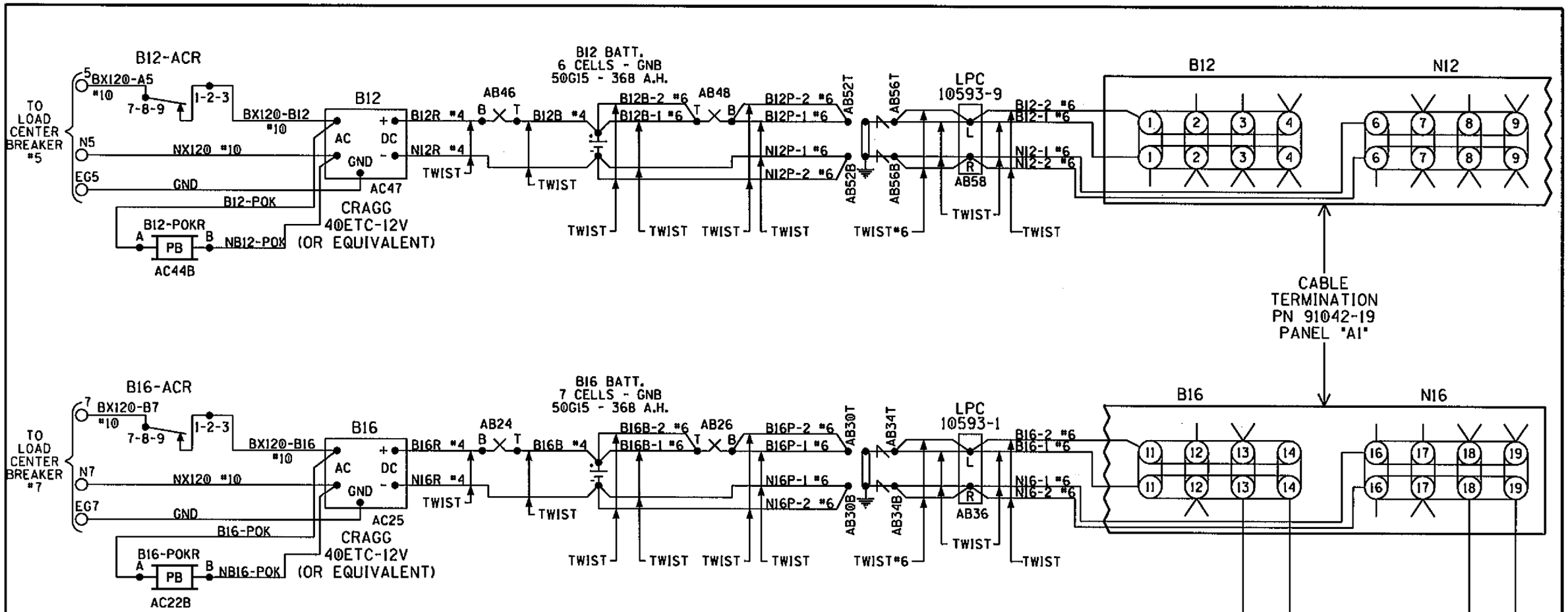

PANEL "A1" CABLE TERMINATION PANEL
B12 & B16 RECTIFIER HOOK-UP

NOTE:
ALL WIRING TO BE #16AWG
UNLESS NOTED OTHERWISE.

DESIGNED BY: RAD	03-03-10
DRAWN BY: SSC	03-03-10
CHECKED BY: MJL	03-04-10
IN SERVICE:	- -

NORFOLK SOUTHERN

OFFICE OF ASS'T. VICE PRESIDENT COMM. & SIGNAL, ATLANTA, GA. — M.P.: 120.85-W

PRINCETON TO E. ST. LOUIS
FAIRFIELD, IL FLGS AT CR2200E

SOUTHERN-WEST DISTRICT — FILE No. R-

CADD or DWG. No. SE0148P.05 — SHEET No. 5 of 22

REVISION INITIALS

PROPERTY
NORFOLK SOUTHERN RAILWAY CO.

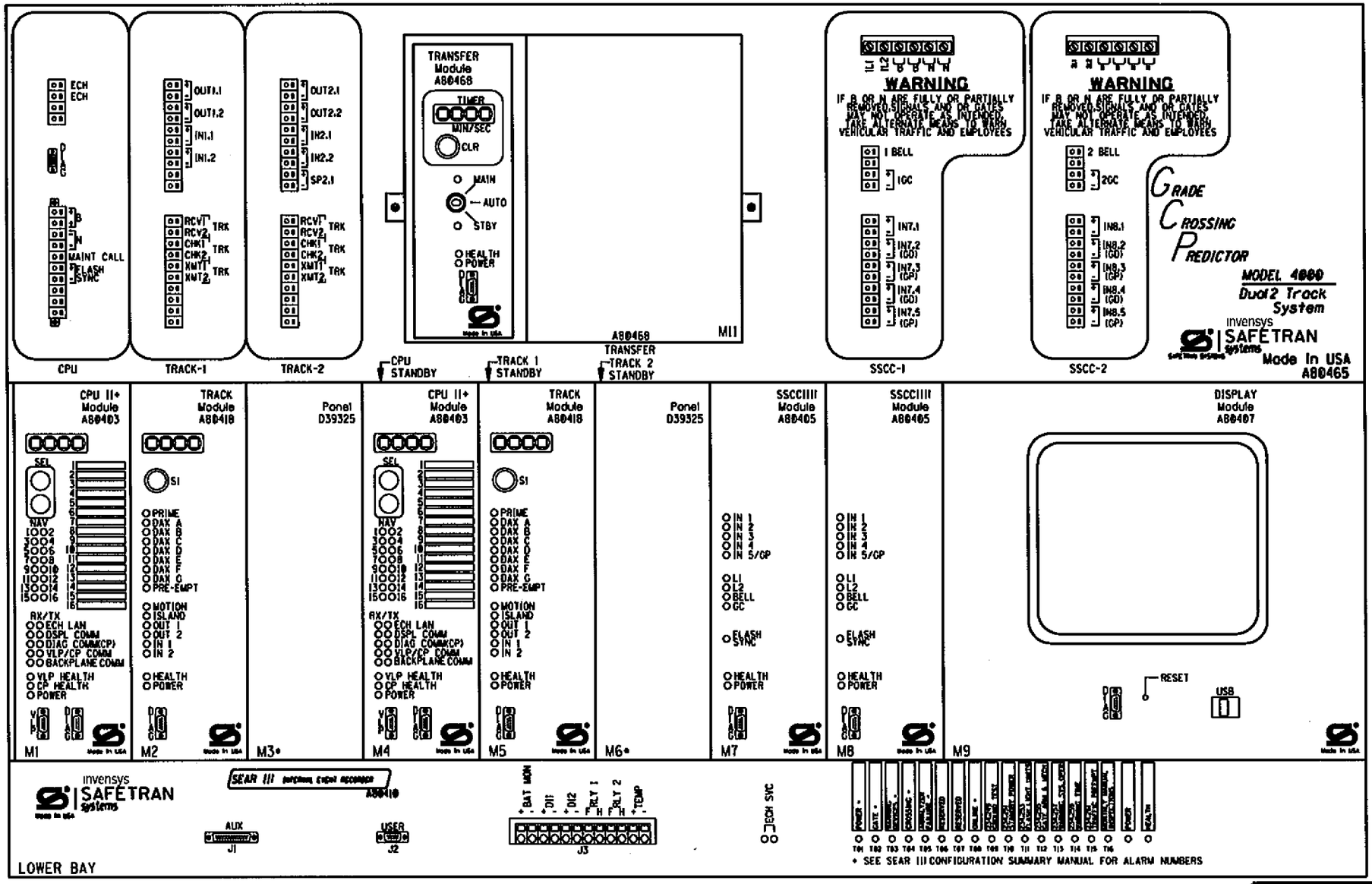

WARNING

REMOVAL OF THE SSCCIIII MODULE WILL CAUSE THE GATE(S) TO DROP BUT THE LIGHTS WILL NOT ACTIVATE

CAUTION

ASSURE CORRECT POLARITY OF THE SSCCIIII MODULE OR SEVERE DAMAGE WILL OCCUR.

ATTENTION!

ENSURE THE DISPLAY MODULE HEATER IS DISABLED. LEAVING THE DISPLAY HEATER ENABLED WILL REDUCE THE AMOUNT OF BATTERY STANDBY TIME IN THE EVENT OF AN AC POWER FAILURE.

HEATER FUNCTION IS JUMPER SELECTABLE ON THE DISPLAY MODULE BOARD.
THREE OPTIONS ARE AVAILABLE:
NORMAL LCD HTR (DEFAULT)
HI CURRENT
NO JUMPER (HEATER DISABLED)

*= MAIN AND STANDBY MAY USE RIO IN TRACK 2 SLOTS (M3 AND M6)

PANEL "A2" 4000 GCP REDUNDANT
2-TK CHASSIS AND MODULE LAYOUT

DESIGNED BY: RAD 03-03-10	NORFOLK SOUTHERN	
DRAWN BY: SSC 03-03-10	OFFICE OF ASS'T. VICE PRESIDENT COMM. & SIGNAL, ATLANTA, GA.	M.P.: 120.85-W
CHECKED BY: MJL 03-04-10	PRINCETON TO E. ST. LOUIS FAIRFIELD, IL FLGS AT CR2200E	
IN SERVICE: - -	SOUTHERN-WEST DISTRICT	FILE No. R-
	CADD or DWG. No. SE0148P.06	SHEET No. 6 of 22

REVISION INITIALS

PROPERTY
NORFOLK SOUTHERN RAILWAY CO.

Program Report

Location and SIN

DOT Number: 724713J
Milepost Number: 120.85-W
Site Name: TR-490

SIN: 755053304716

MCF and Template Selection

MCF Name: GCP-T6X-02-1.mcf
MCF Revision: 021
MCF CRC: 6076E435

Template = 1A:6 Trk Bi

Check Numbers

Office Check No. (DT 4.6.0): 41952C90
Office Check Number: 41952C90
Config. Check Number: 5C8538DC
(Based on MCF Revision 021)

Program

BASIC: module configuration
Track 1 Slot = Track
Track 2/RIO 1 Slot = Not Used
Track 3 Slot = Not Used
Track 4 Slot = Not Used
Track 5/RIO 2 Slot = Not Used
Track 6/RIO 3 Slot = Not Used
SSCC-1 Slot = SSCC31
SSCC-2 Slot = SSCC31
SEAR Used = Yes

BASIC: MS/GCP operation
Track 1: MS/GCP Operation = Yes

BASIC: Island operation
Track 1: Island Used = Internal

BASIC: preemption
Preempt Logic = No

BASIC: radio Dax links
Radio DAX link A Used = No
Radio DAX link B Used = No

BASIC: Vital Comms links
Vital Comms link 1 Used = No
Vital Comms link 2 Used = No

PREDICTORS: track 1
Track 1: Prime Used = Yes
Track 1: Dax A Used = No
Track 1: Dax B Used = No
Track 1: Dax C Used = No
Track 1: Dax D Used = No
Track 1: Dax E Used = No
Track 1: Dax F Used = No
Track 1: Dax G Used = No

GCP: track 1
Track 1: GCP Freq Category = Standard
Track 1: GCP Frequency = 86 Hz
Track 1: Approach Distance = 2573 ft
Track 1: Uni/Bi/Sim-Bidirni = Bidirni
Track 1: GCP Transmit Level = High
Track 1: Island Connection = Isl1
Track 1: Island Distance = 130 ft
Track 1: Computed Distance = 9999 ft
Track 1: Linearization Steps = 100

GCP: track 1 enhanced det
Track 1: Inbound PS Sensitivity = Off
Track 1: Speed Limiting Used = Yes
Track 1: Outbound False Act Lvl = Normal
Track 1: Outbound PS Timer = 20 sec
Track 1: Trailing Switch Logic = On
Track 1: Post Joint Detn Time = 15 sec
Track 1: Adv Appr Predn = No
Track 1: Cancel Pickup Delay = This Isl

GCP: track 1 prime
Track 1: Prime Warning Time = 30 sec
Track 1: Prime Offset Distance = 0 ft
Track 1: Switch MS EZ Level = 10
Track 1: Prime MS/GCP Mode = Pred
Track 1: Prime Pickup Delay = 15 sec
Track 1: Prime UAX = Not Used

GCP: track 1 pos start
Track 1: Positive Start = Off
Track 1: Sudden Shnt Det Used = No
Track 1: Low EZ Detection Used = No

GCP: track 1 MS Control
Track 1: MS/GCP Ctrl IP Used = No
Track 1: MS Sensitivity Level = 0
Track 1: Compensation Level = 1300
Track 1: Warn Time-Ballast Comp = High
Track 1: Low EX Adjustment = 39
Track 1: Bidirn Dax Passthru = No
Track 1: False Act on Train Stop = No
Track 1: EX Limiting Used = Yes
Track 1: EZ Correction Used = Yes

ISLAND: track 1
Track 1: IslFrequency = 4.9 kHz
Track 1: Pickup Delay (2s +) = 0 sec
Track 1: IslEnable IP Used = No

AND: track Anding
AND 1 XR Used = Yes
AND 2 Used = No
AND 3 Used = No
AND 4 Used = No
AND 5 Used = No
AND 6 Used = No
AND 7 Used = No
AND 8 Used = No

AND: AND 1 XR
AND 1 XR Track 1 = Prime
AND 1 Enable Used = Yes
And 1 Enable Pickup = 5 sec
AND 1 Enable Drop = 0 sec
AND 1 Wrap Used = No

ADVANCED: MS restart
MS/GCP Restart Used = No

ADVANCED: out of service
OOS Control = Display+OOS IPs
OOS Timeout = Yes
OOS Timeout = 1 hrs

ADVANCED: out of service 2
T1 OOS Control = OOS Input 1

ADVANCED: track wrap circuits
Wrap LOS Timer = 5 sec
Track 1 Wrap Used = No

ADVANCED: trk 1 overrides
Track 1: All Predictors Override Used = No

ADVANCED: OR logic
OR 1 Used = No
OR 2 Used = No
OR 3 Used = No
OR 4 Used = No

ADVANCED: Internal I/O 1
Pass Thrus = No
Int.1 Sets = Not Used
Int.1 Set by = Not Used
Int.2 Sets = Not Used
Int.2 Set by = Not Used
Int.3 Sets = Not Used
Int.3 Set by = Not Used
Int.4 Sets = Not Used
Int.4 Set by = Not Used

ADVANCED: Internal I/O 2
Int.5 Sets = Not Used
Int.5 Set by = Not Used
Int.6 Sets = Not Used
Int.6 Set by = Not Used
Int.7 Sets = Not Used
Int.7 Set by = Not Used
Int.8 Sets = Not Used
Int.8 Set by = Not Used

ADVANCED: Internal I/O 3
Int.9 Sets = Not Used
Int.9 Set by = Not Used
Int.10 Sets = Not Used
Int.10 Set by = Not Used
Int.11 Sets = Not Used
Int.11 Set by = Not Used
Int.12 Sets = Not Used
Int.12 Set by = Not Used

ADVANCED: Internal I/O 4
Int.13 Sets = Not Used
Int.13 Set by = Not Used
Int.14 Sets = Not Used
Int.14 Set by = Not Used
Int.15 Sets = Not Used
Int.15 Set by = Not Used
Int.16 Sets = Not Used
Int.16 Set by = Not Used

ADVANCED: site options
Daylight Savings = On
Units = Standard
Maint Call Rpt IP Used = No
Emergency Activate IP = No
EZ/EX Logging = Change
EZ/EX Point Change = 3

4000 GCP PROGRAMMING SETUP

DESIGNED BY: RAD 03-03-10	NORFOLK SOUTHERN		
DRAWN BY: SSC 03-03-10	OFFICE OF ASS'T. VICE PRESIDENT COMM. & SIGNAL, ATLANTA, GA.	M.P.: 120.85-W	
CHECKED BY: MJL 03-04-10	PRINCETON TO E. ST. LOUIS FAIRFIELD, IL FLGS AT CR2200E		
IN SERVICE: - -	SOUTHERN-WEST DISTRICT	FILE No. R-	
	CADD or DWG. No. SE0148P.07	SHEET No. 7 of 22	

REVISION INITIALS

PROPERTY
NORFOLK SOUTHERN RAILWAY CO.

SSCC: 1
SSCC-1 Activation = AND 1 XR
SSCC-1 Gate Delay = 4 sec
SSCC-1 Number of GPs = 1
SSCC-1 Number of GDs = 2
SSCC 1 : Flash Rate = 40
SSCC 1 : Low Battery Detection = No
SSCC 1 : Flash Sync = master
SSCC 1 : Invert Gate Output = No
SSCC 1 : Lamp Neutral Test = On
Aux-1 Xng Ctrl Used = No

SSCC: 2
SSCC-2 Activation = AND 1 XR
SSCC-2 Gate Delay = 4 sec
SSCC-2 Number of GPs = 0
SSCC-2 Number of GDs = 0
SSCC 2 : Flash Rate = 40
SSCC 2 : Low Battery Detection = No
SSCC 2 : Flash Sync = slave
SSCC 2 : Invert Gate Output = No
SSCC 2 : Lamp Neutral Test = On
Aux-2 Xng Ctrl Used = No

OUTPUT: assignment page 1
OUT 1.1 = Not Used
OUT 1.2 = Not Used

INPUT: assignment page 1
IN 1.1 = Not Used
IN 1.2 = Not Used

IO: assignment SSCC
OUT GC 1 = Gate Output 1
OUT GC 2 = Gate Output 2
IN 7.1 = Not Used
IN 7.2 = GD 1.2
IN 7.3 = AND 1 XR Enable
IN 7.4 = GD 1.1
IN 7.5 = GP 1.1
IN 8.1 = Not Used
IN 8.2 = Out Of Service IP 1
IN 8.3 = Not Used
IN 8.4 = Not Used
IN 8.5 = Not Used

SEAR
SEAR Subnode = 3
DI 1 = Gnd Flt Tester 1
DI 2 = Not Used
Rly 1 = Ground Fault Test
Rly 2 = AC Control

SEAR: Inputs
SP 2.1 = POK 1
SP 3.1 = Not Used
SP 4.1 = Not Used
SP 5.1 = Not Used
SP 6.1 = Not Used

SEAR: slot 1-4 Inputs
IN 1.1 = Not Used
IN 1.2 = Not Used
IN 2.1 = Not Used
IN 2.2 = Not Used
IN 3.1 = Not Used
IN 3.2 = Not Used
IN 4.1 = Not Used
IN 4.2 = Not Used

SEAR: Inputs slot 5
IN 5.1 = Not Used
IN 5.2 = Not Used

SEAR: Inputs slot 6
IN 6.1 = Not Used
IN 6.2 = Not Used

SEAR: slot 7-8 Inputs
IN 7.1 = TSS 1
IN 8.1 = TSS 2
IN 8.3 = POK 2
IN 8.4 = Not Used
IN 8.5 = Not Used

SITE: programming
Radio Subnode = 1
Field Password = Off
Low Battery Enabled = Off

Configuration Package File

Filename: SE0148.pac

4000 GCP PROGRAMMING SETUP

DESIGNED BY: RAD 03-03-10	NORFOLK SOUTHERN		
DRAWN BY: SSC 03-03-10	OFFICE OF ASS'T. VICE PRESIDENT COMM. & SIGNAL, ATLANTA, GA.	M.P.: 120.85-W	
CHECKED BY: MJL 03-04-10	PRINCETON TO E. ST. LOUIS FAIRFIELD, IL FLGS AT CR2200E		
IN SERVICE: - -	SOUTHERN-WEST DISTRICT	FILE No. R-	
	CADD or DWG. No. SE0148P.08	SHEET No. 8 of 22	

REVISION INITIALS

PROPERTY
NORFOLK SOUTHERN RAILWAY CO.

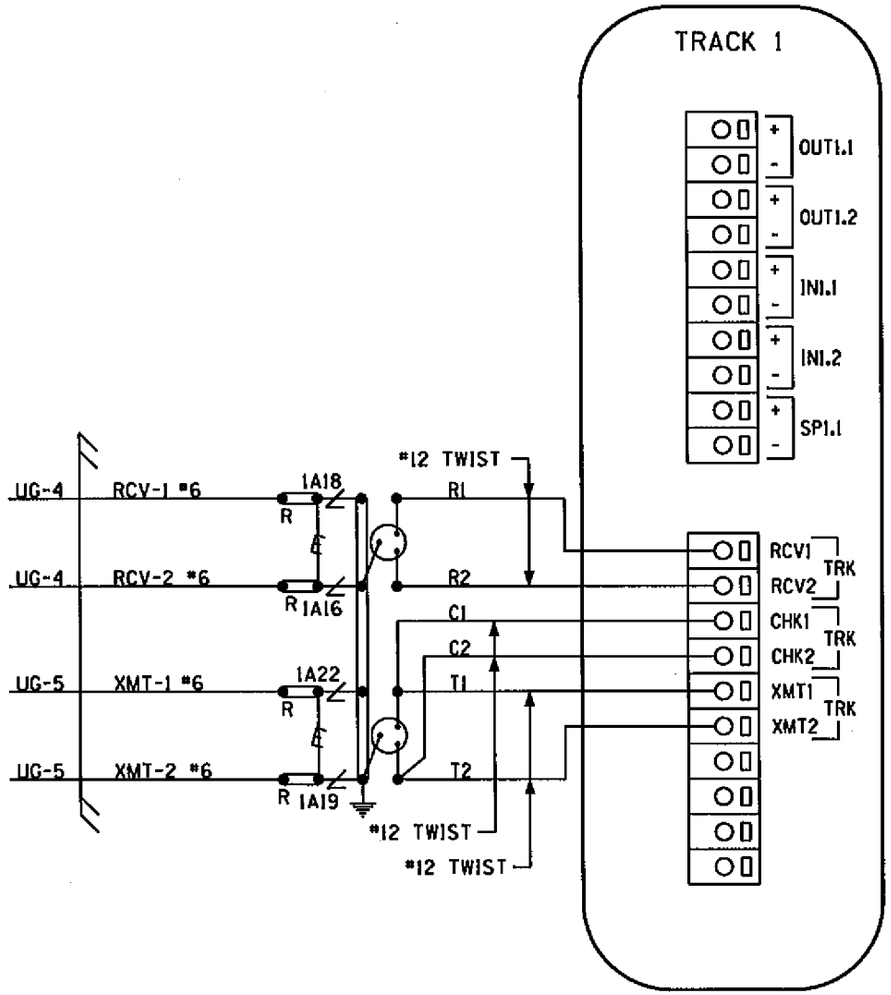

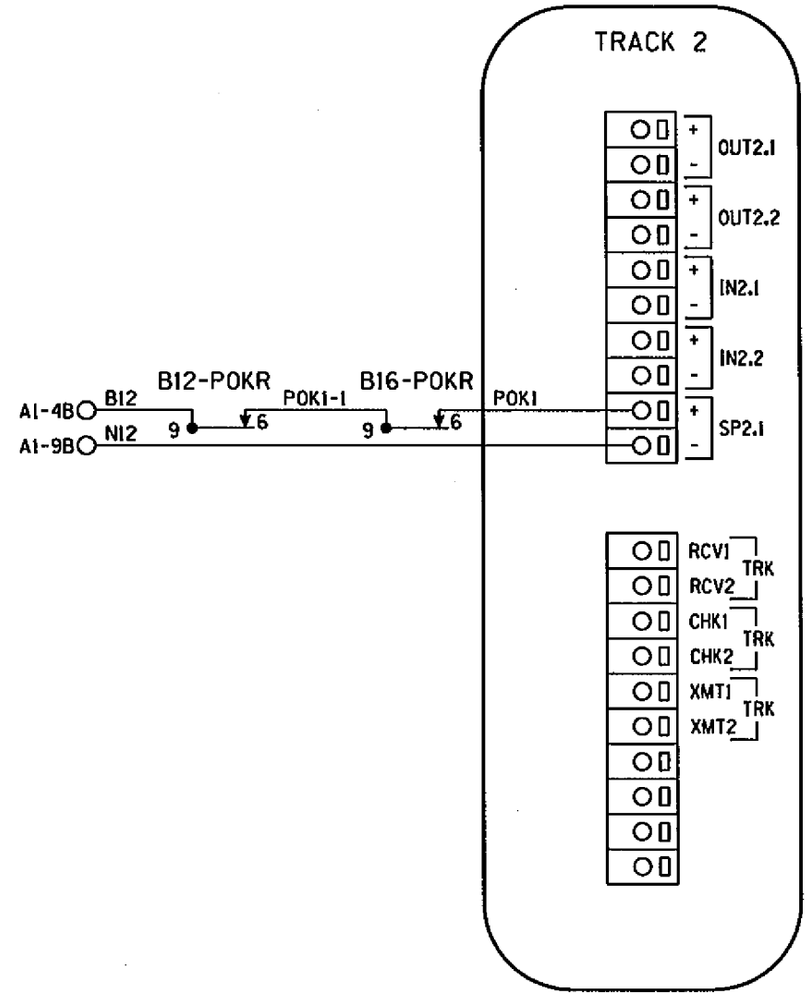

PANEL "A2" CONNECTORS FOR MODULES (A80418)

NOTE:
ALL WIRING TO BE #16AWG
UNLESS NOTED OTHERWISE.

DESIGNED BY: RAD 03-03-10	NORFOLK SOUTHERN		
DRAWN BY: SSC 03-03-10	OFFICE OF ASS'T. VICE PRESIDENT COMM. & SIGNAL, ATLANTA, GA.	M.P.: 120.85-W	
CHECKED BY: MJL 03-04-10	PRINCETON TO E. ST. LOUIS FAIRFIELD, IL FLGS AT CR2200E		
IN SERVICE: - -	SOUTHERN-WEST DISTRICT	FILE No. R-	
	CADD or DWG. No. SE0148P.09	SHEET No. 9 of 22	

REVISION INITIALS

PROPERTY
NORFOLK SOUTHERN RAILWAY CO.

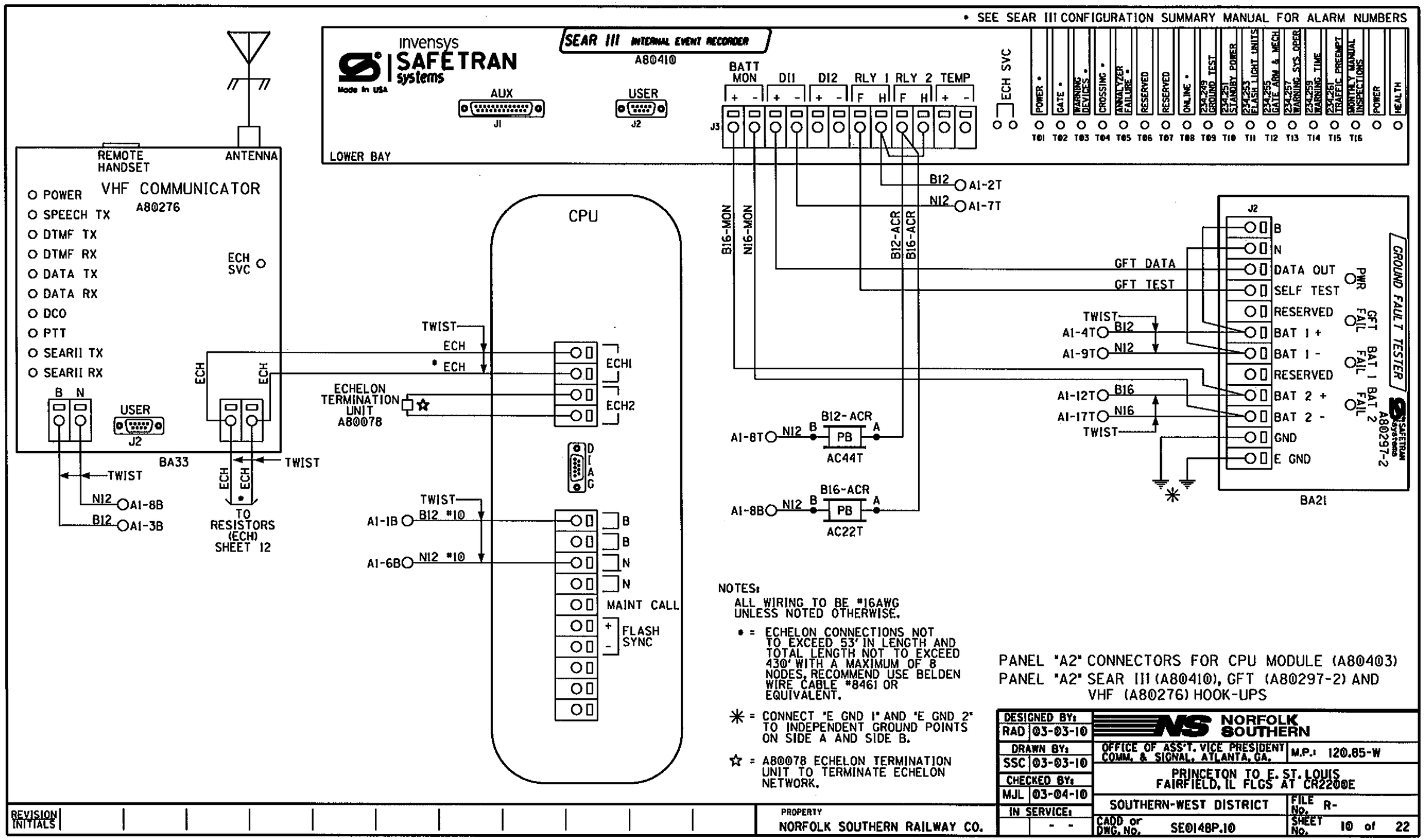
• SEE SEAR III CONFIGURATION SUMMARY MANUAL FOR ALARM NUMBERS
invensys SAFETRAN systems
Made in USA
SEAR III INTERNAL EVENT RECORDER
A80410
AUX
J1
USER
J2
BATT MON
DI1
DI2
RLY 1
RLY 2
TEMP
ECH SVC
POWER •
GATE •
WARNING DEVICES •
CROSSING •
ANALYZER FAILURE •
RESERVED
RESERVED
ON LINE •
234249 GROUND TEST
234251 STANDBY POWER
234253 FLASH LIGHT UNITS
234255 GATE ARM & MECH
234257 WARNING SYS. OPER
234259 WARNING TIME
234261 TRAFFIC PREEMPT
MONTHLY MANUAL INSPECTIONS
POWER
HEALTH
T01 T02 T03 T04 T05 T06 T07 T08 T09 T10 T11 T12 T13 T14 T15 T16
LOWER BAY
REMOTE HANDSET
ANTENNA
VHF COMMUNICATOR
A80276
POWER
SPEECH TX
DTMF TX
DTMF RX
DATA TX
DATA RX
DCO
PTT
SEARII TX
SEARII RX
ECH SVC
B N
USER
J2
BA33
TWIST
NI2 A1-8B
BI2 A1-3B
ECH
TO RESISTORS (ECH) SHEET 12
CPU
TWIST
ECH
• ECH
ECHELON TERMINATION UNIT A80078
ECH1
ECH2
D I A G
TWIST
A1-1B BI2 #10
A1-6B NI2 #10
B
B
N
N
MAINT CALL
FLASH SYNC
B16-MON
NI6-MON
BI2-ACR
B16-ACR
BI2 A1-2T
NI2 A1-7T
A1-8T NI2 B PB A
BI2-ACR
AC44T
A1-8B NI2 B PB A
B16-ACR
AC22T
J2
B
N
DATA OUT
SELF TEST
RESERVED
BAT 1 +
BAT 1 -
RESERVED
BAT 2 +
BAT 2 -
GND
E GND
GFT DATA
GFT TEST
TWIST
A1-4T BI2
A1-9T NI2
A1-12T BI6
A1-17T NI6
TWIST
PWR
GFT FAIL
BAT 1 FAIL
BAT 2 FAIL
GROUND FAULT TESTER
SAFETRAN Systems
A80297-2
BA21
NOTES:
ALL WIRING TO BE #16AWG UNLESS NOTED OTHERWISE.
• = ECHELON CONNECTIONS NOT TO EXCEED 53' IN LENGTH AND TOTAL LENGTH NOT TO EXCEED 430' WITH A MAXIMUM OF 8 NODES, RECOMMEND USE BELDEN WIRE CABLE #8461 OR EQUIVALENT.
✳ = CONNECT "E GND 1" AND "E GND 2" TO INDEPENDENT GROUND POINTS ON SIDE A AND SIDE B.
☆ = A80078 ECHELON TERMINATION UNIT TO TERMINATE ECHELON NETWORK.
PANEL "A2" CONNECTORS FOR CPU MODULE (A80403)
PANEL "A2" SEAR III (A80410), GFT (A80297-2) AND VHF (A80276) HOOK-UPS
DESIGNED BY: RAD 03-03-10
DRAWN BY: SSC 03-03-10
CHECKED BY: MJL 03-04-10
IN SERVICE: - -
NORFOLK SOUTHERN
OFFICE OF ASS'T. VICE PRESIDENT COMM. & SIGNAL, ATLANTA, GA.
M.P.: 120.85-W
PRINCETON TO E. ST. LOUIS
FAIRFIELD, IL FLGS AT CR2200E
SOUTHERN-WEST DISTRICT
FILE No. R-
CADD or DWG. No. SE0148P.10
SHEET No. 10 of 22
REVISION INITIALS
PROPERTY
NORFOLK SOUTHERN RAILWAY CO.

TO CONFIGURE SEARIII PRESS SITE SETUP KEY.
USE ARROW KEYS TO MAKE SELECTION,
PRESS ENTER AFTER SELECTION HAS BEEN MADE.

	SITE SET UP PROCEDURE	
	FUNCTION	LED DISPLAY
	DATE/TIME	
	AUTOMATIC DST ADJUSTMENT	YES
	TIME ZONE	CST
	SITE NAME	TR-490
	MILEPOST	120.85-WW
	DOT #	724713J
	TESTER TYPE	CROSSING
	DATE FORMAT	MM-DD-YYYY
	TEMP FORMAT	FAHRENHEIT
	INDICATE HOLD (SEC)	0
	INDICATE REFRESH (SEC)	60
	SITE ATCS	7.550.533.047.03.01
	SITE TYPE	NO COMMUNICATION
•••	OFFICE ATCS ADDRESS	2.550.00.0000
•••	PRIMARY HOP ADDR	7.RRR.LLL.GGG.XX.XX
•••	BACKUP HOP ADDR 1	7.RRR.LLL.GGG.XX.XX
•••	BACKUP HOP ADDR 2	7.RRR.LLL.GGG.XX.XX
•••	POLL ID	1
•••	MODE	GEN/ATCS
•••	WAMS XID	DISABLED
•••	OFFICE COMM DEVICE	MCM (ECHELON)
•••	RADIO ATCS ADDR	7.RRR.LLL.GGG.01.01
•••	PHONE #	(OFFICE NUMBER)
•••	INIT STRING	
•••	FIELD COMM	NONE
••••	USER PORT	BAUD 57600, N, 8, 1, NONE
••••	AUX PORT	BAUD 9600, N, 8, 1, NONE

VERIFY NUMBER OF BULBS: SENSOR #1	
CURR 1: LAMP SET UP	4 BULBS
CURR 2: LAMP SET UP	4 BULBS

VERIFY NUMBER OF BULBS: SENSOR #2	
CURR 1: LAMP SET UP	4 BULBS
CURR 2: LAMP SET UP	4 BULBS

	CONTROL SYSTEM CONFIGURATION MENU QUESTIONS	
	THE QUESTION	SELECT FROM MENU OPTION
	RESET NAMES AND MODULES?	YES
	RAILROAD NUMBER	550
	CROSSING CONFIGURATION	NORMAL
	AND 1 USED AS XR?	YES
	AND 2 USED AS XR?	NO
	AND 3 USED AS XR?	NO
	AND 4 USED AS XR?	NO
	AND 5 USED AS XR?	NO
	AND 6 USED AS XR?	NO
	AND 7 USED AS XR?	NO
	AND 8 USED AS XR?	NO
•	XR CONTROLLED BY FOREIGN RR	
	ENTRANCE GATES	2
•	GATES CONTROLLED BY FOREIGN RR	
	GATE POSITION FAIL TIME (SECONDS)	20
	BATTERY BANKS	2
	BATTERY MON USED	YES
	INTERNAL CROSSING CONTROLLERS	2
	EXTERNAL CROSSING CONTROLLERS	0
	VHF COMMUNICATOR	YES
	DTMF ACTIVATION	YES
•••••	ACTIVATION CODE	713
	ACTIVATION TIMEOUT (SECONDS)	60
	ILOD MODULES	2
	ANY LED BULBS USED	NO
	AUTO INSPECTIONS	NO
	BELL SENSORS	1
••	BELL SENSOR TSS1	YES
••	BELL SENSOR TSS2	NO
••	BELL SENSOR TSS3	NO
••	BELL SENSOR TSS4	NO
••	BELL SENSOR TSS5	NO
••	BELL SENSOR TSS6	NO
••	BELL SENSOR TSS7	NO
••	BELL SENSOR TSS8	NO

CONTROL SYSTEM CONFIGURATION MENU QUESTIONS (CONT.)	
BELL ON	GATES LOWERING
GFT'S	YES
BATTERIES ON GFT1	2
GATE TIP SENSORS	YES
RTU	NO
VHF VOICE CHANNEL	2
VHF DATA CHANNEL	2
USE CELL MODEM NON-CRITICAL FEATURE	NO
FULL APPROACH MOVES ALARM	ACTIVATE

PROGRAM MENU QUESTIONS	PROGRAM
EDIT DIGITAL INPUTS	NO
EDIT BATTERIES	NO
EDIT RELAYS	NO
EDIT INDICATOR LEDS	NO
EDIT TEST LEDS	NO
EDIT ILOD SENSORS	NO
EDIT VHF SETTINGS	NO
GCP4K ATCS SUBNODE	16

NOTES:

• = DISPLAYED IF CROSSING CONFIGURATION IS SPLIT GATE

•• = OPTIONS: IF BELL SENSOR = 0, THEN BELL FIELDS ARE NOT USED.

••• = IF SITE TYPE = NO COMMUNICATION, THEN THESE OPTIONS ARE NOT DISPLAYED

•••• = THESE SETTINGS SHOULD BE LEFT AT THE DEFAULT SETTING.

••••• = USE LAST 3 NUMBERS FROM DOT NUMBER

SEAR III PROGRAMMING SETUP

DESIGNED BY: RAD 03-03-10	NORFOLK SOUTHERN		
DRAWN BY: SSC 03-03-10	OFFICE OF ASS'T. VICE PRESIDENT COMM. & SIGNAL, ATLANTA, GA.	M.P.: 120.85-W	
CHECKED BY: MJL 03-04-10	PRINCETON TO E. ST. LOUIS FAIRFIELD, IL FLGS AT CR2200E		
IN SERVICE: - -	SOUTHERN-WEST DISTRICT	FILE No. R-	
CADD or DWG. No. SE0148P.11		SHEET No. 11 of 22	

REVISION INITIALS

PROPERTY
NORFOLK SOUTHERN RAILWAY CO.

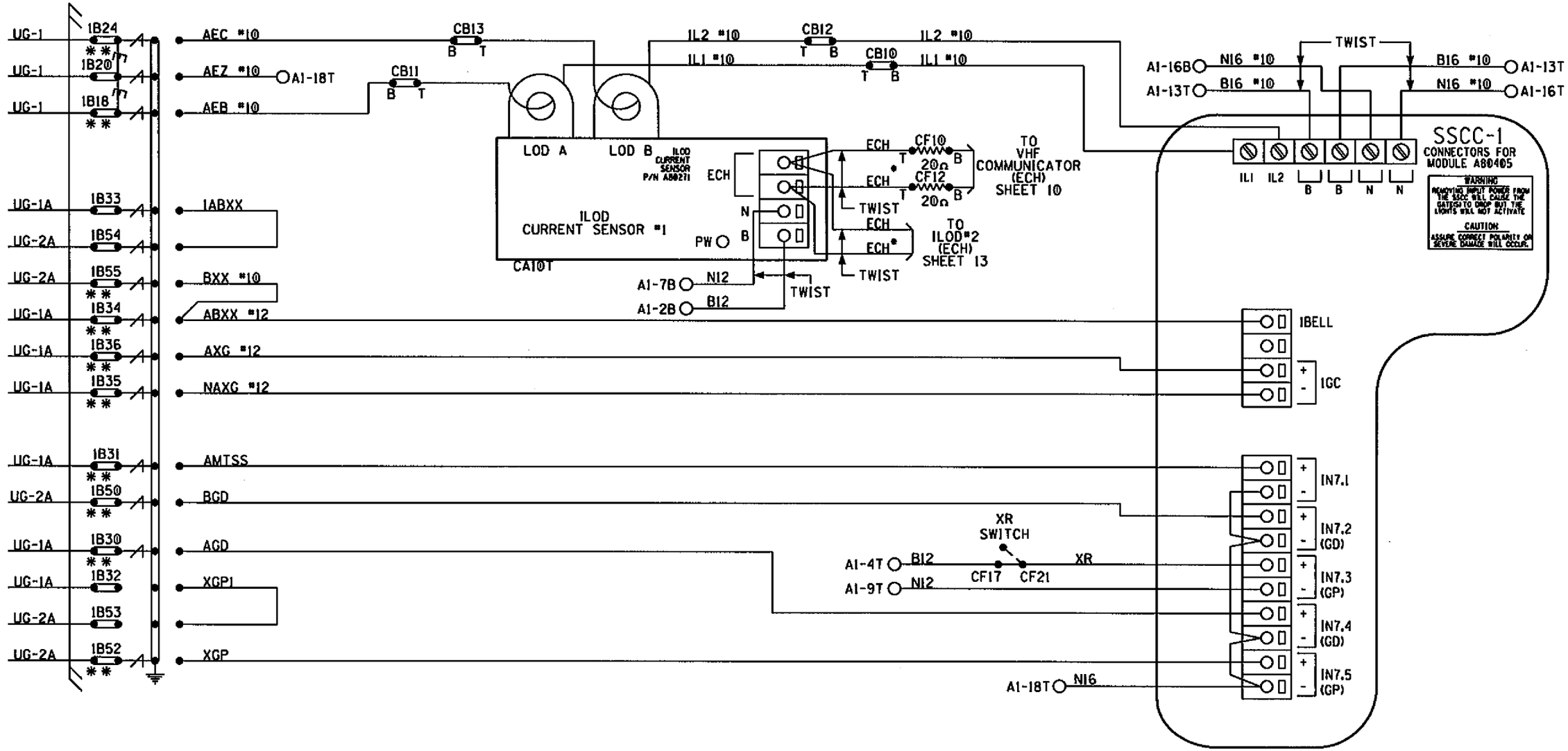

NOTES: ALL WIRING TO BE #16AWG UNLESS NOTED OTHERWISE.

• = ECHELON CONNECTIONS NOT TO EXCEED 53' IN LENGTH AND TOTAL LENGTH NOT TO EXCEED 430' WITH A MAXIMUM OF 8 NODES, RECOMMEND USE BELDEN WIRE CABLE #8461 OR EQUIVALENT.

** = TEST LINKS MUST BE OPENED TEMPORARILY FOR NEW COLD START OF NEW OR REPLACEMENT SSCC MODULE AND CAN ONLY BE CLOSED IN SEQUENCE WITH MFR. INSTRUCTIONS: SECTION 8 OF THE GCP 4000 REFERENCE MANUAL.

PANEL "A2" CONNECTORS FOR SSCC#1 MODULE (A80405)
ILOD#1 (A80271) HOOK-UP

DESIGNED BY: RAD 03-03-10	NORFOLK SOUTHERN		
DRAWN BY: SSC 03-03-10	OFFICE OF ASS'T. VICE PRESIDENT COMM. & SIGNAL, ATLANTA, GA.	M.P.: 120.85-W	
CHECKED BY: MJL 03-04-10	PRINCETON TO E. ST. LOUIS FAIRFIELD, IL FLGS AT CR2200E		
IN SERVICE: - -	SOUTHERN-WEST DISTRICT	FILE No. R-	
	CADD or DWG. No. SE0148P.12	SHEET No. 12 of 22	

REVISION INITIALS

PROPERTY NORFOLK SOUTHERN RAILWAY CO.

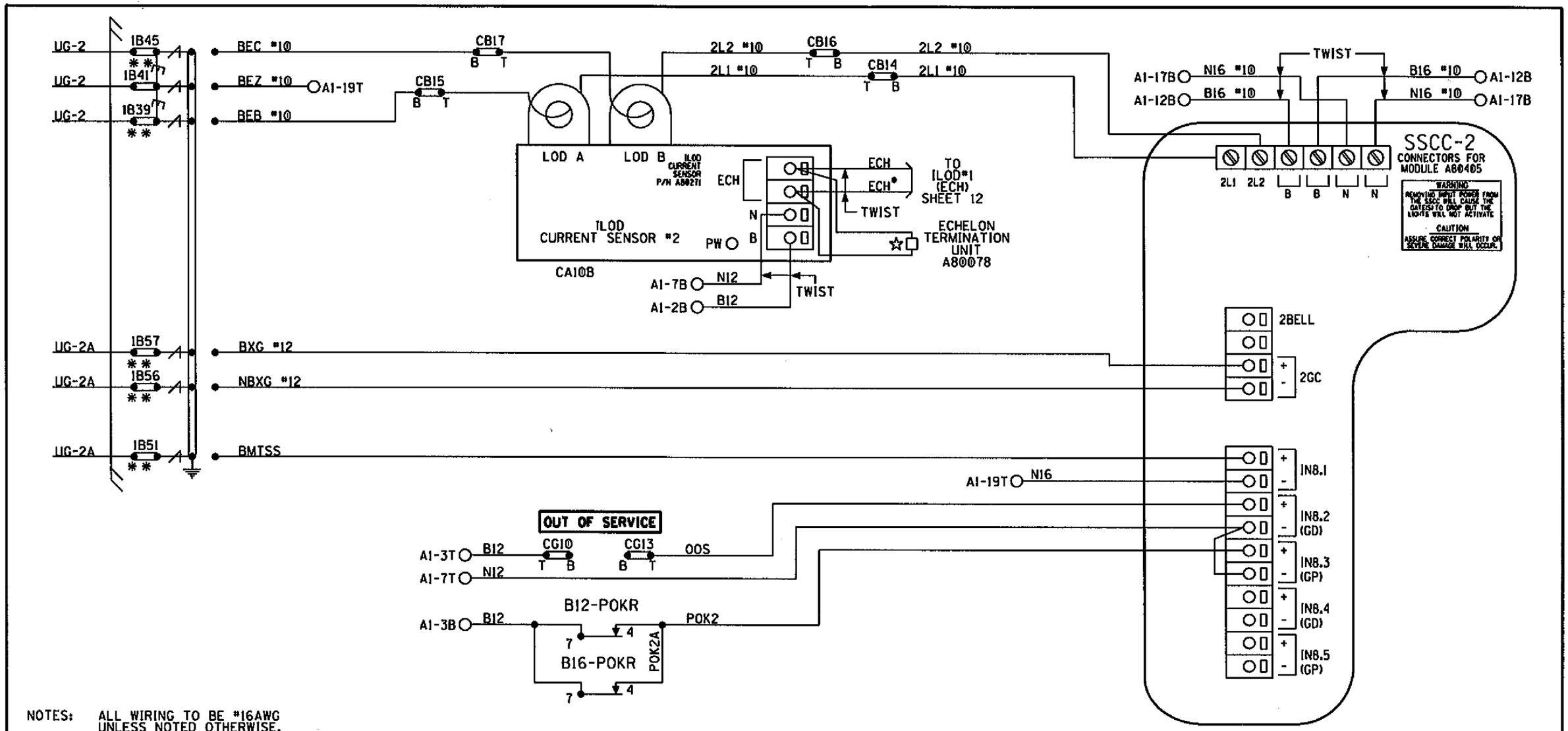

NOTES: ALL WIRING TO BE #16AWG UNLESS NOTED OTHERWISE.

* = ECHELON CONNECTIONS NOT TO EXCEED 53' IN LENGTH AND TOTAL LENGTH NOT TO EXCEED 430' WITH A MAXIMUM OF 8 NODES. RECOMMEND USE BELDEN WIRE CABLE #8461 OR EQUIVALENT.

** = TEST LINKS MUST BE OPENED TEMPORARILY FOR NEW COLD START OF NEW OR REPLACEMENT SSCC MODULE AND CAN ONLY BE CLOSED IN SEQUENCE WITH MFR. INSTRUCTIONS: SECTION 8 OF THE GCP 4000 REFERENCE MANUAL.

☆ = A80078 ECHELON TERMINATION UNIT TO TERMINATE ECHELON NETWORK.

PANEL "A2" CONNECTORS FOR SSCC#2 MODULE (A80405)
PANEL "A3" ILOD#2 (A80271) HOOK-UP

DESIGNED BY: RAD 03-03-10	NORFOLK SOUTHERN		
DRAWN BY: SSC 03-03-10	OFFICE OF ASS'T. VICE PRESIDENT COMM. & SIGNAL, ATLANTA, GA.	M.P.: 120.85-W	
CHECKED BY: MJL 03-04-10	PRINCETON TO E. ST. LOUIS FAIRFIELD, IL FLGS AT CR2200E		
IN SERVICE: - -	SOUTHERN-WEST DISTRICT	FILE No. R-	
	CADD or DWG. No. SE0148P.13	SHEET No. 13 of 22	

REVISION INITIALS										

PROPERTY
NORFOLK SOUTHERN RAILWAY CO.

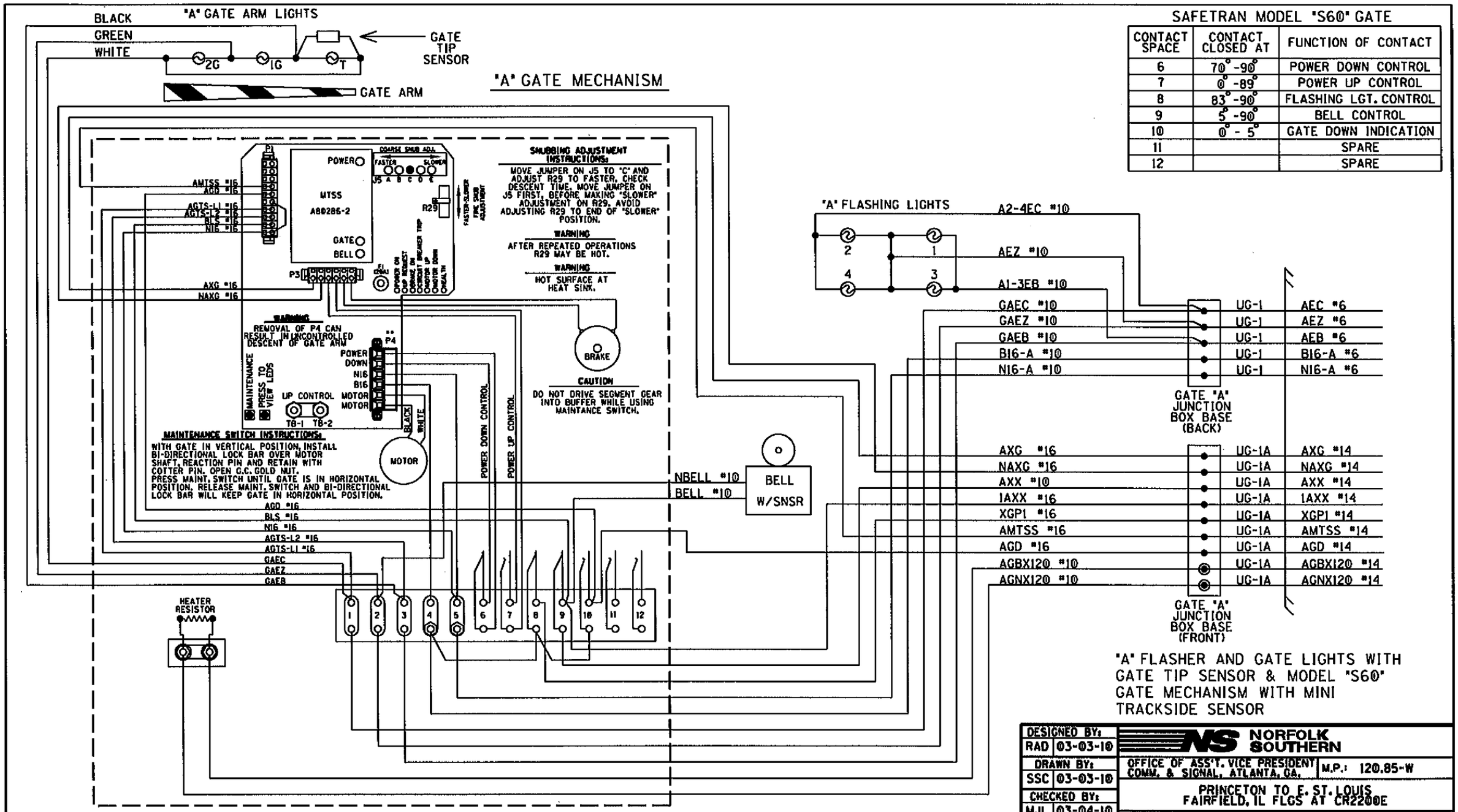

SAFETRAN MODEL "S60" GATE

CONTACT SPACE	CONTACT CLOSED AT	FUNCTION OF CONTACT
6	70°-90°	POWER DOWN CONTROL
7	0°-89°	POWER UP CONTROL
8	83°-90°	FLASHING LGT. CONTROL
9	5°-90°	BELL CONTROL
10	0°-5°	GATE DOWN INDICATION
11		SPARE
12		SPARE

"A" FLASHER AND GATE LIGHTS WITH GATE TIP SENSOR & MODEL "S60" GATE MECHANISM WITH MINI TRACKSIDE SENSOR

DESIGNED BY: RAD 03-03-10	NORFOLK SOUTHERN	
DRAWN BY: SSC 03-03-10	OFFICE OF ASS'T. VICE PRESIDENT COMM. & SIGNAL, ATLANTA, GA.	M.P.: 120.85-W
CHECKED BY: MJL 03-04-10	PRINCETON TO E. ST. LOUIS FAIRFIELD, IL FLGS AT CR2200E	
IN SERVICE: - -	SOUTHERN-WEST DISTRICT	FILE No. R-
	CADD or DWG. No. SE0148P.14	SHEET No. 14 of 22

REVISION INITIALS

PROPERTY
NORFOLK SOUTHERN RAILWAY CO.

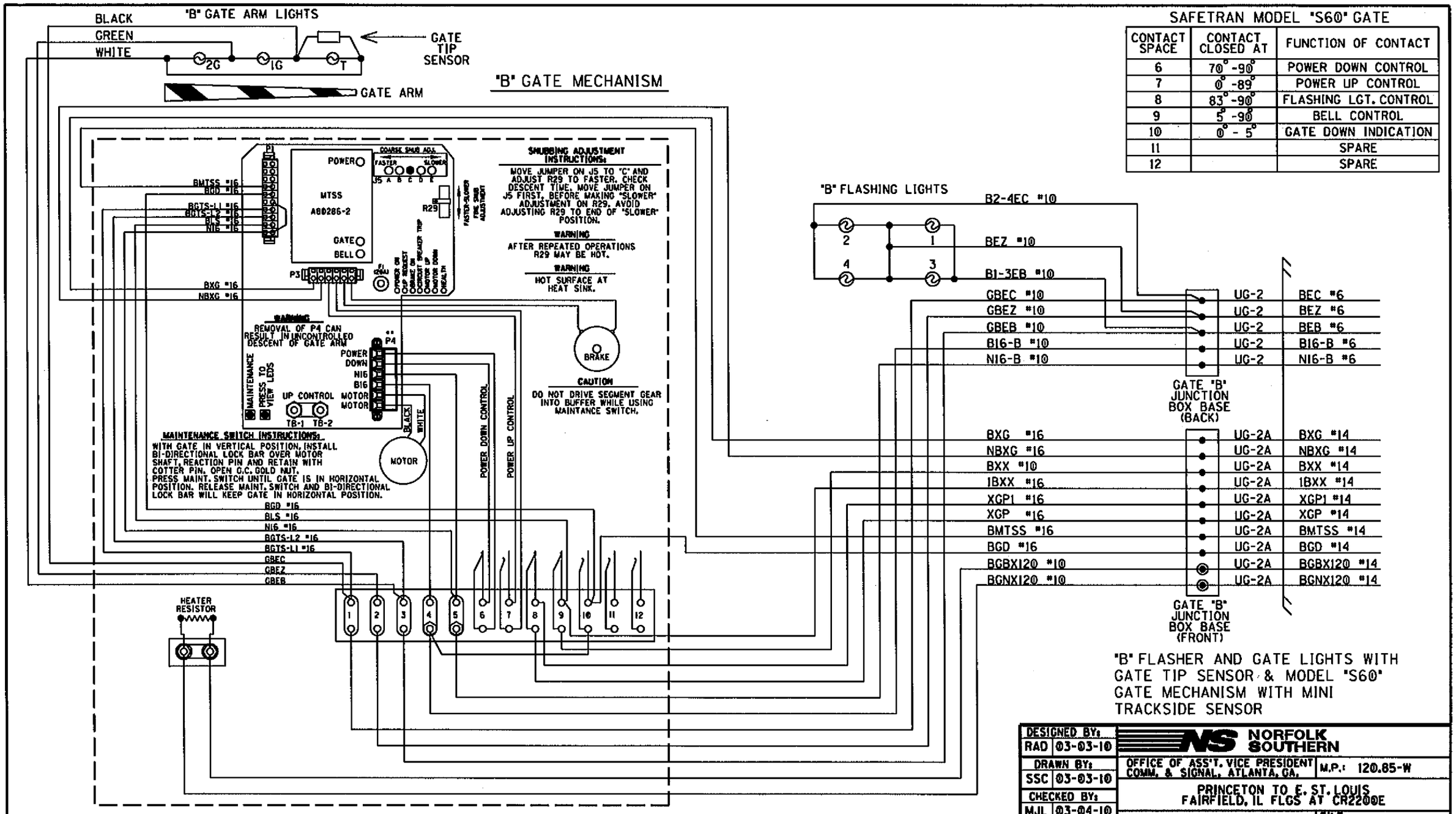

SAFETRAN MODEL "S60" GATE

CONTACT SPACE	CONTACT CLOSED AT	FUNCTION OF CONTACT
6	70°-90°	POWER DOWN CONTROL
7	0°-89°	POWER UP CONTROL
8	83°-90°	FLASHING LGT. CONTROL
9	5°-90°	BELL CONTROL
10	0°-5°	GATE DOWN INDICATION
11		SPARE
12		SPARE

"B" FLASHER AND GATE LIGHTS WITH GATE TIP SENSOR & MODEL "S60" GATE MECHANISM WITH MINI TRACKSIDE SENSOR

DESIGNED BY: RAD 03-03-10	NORFOLK SOUTHERN
DRAWN BY: SSC 03-03-10	OFFICE OF ASS'T. VICE PRESIDENT COMM. & SIGNAL, ATLANTA, GA. M.P.: 120.85-W
CHECKED BY: MJL 03-04-10	PRINCETON TO E. ST. LOUIS FAIRFIELD, IL FLGS AT CR2200E
IN SERVICE: " "	SOUTHERN-WEST DISTRICT FILE No. R-
	CADD or DWG. No. SE0148P.15 SHEET No. 15 of 22

REVISION INITIALS

PROPERTY NORFOLK SOUTHERN RAILWAY CO.

LEFT TWO ROWS TERMINAL BOARD 1

"1A" "1B"

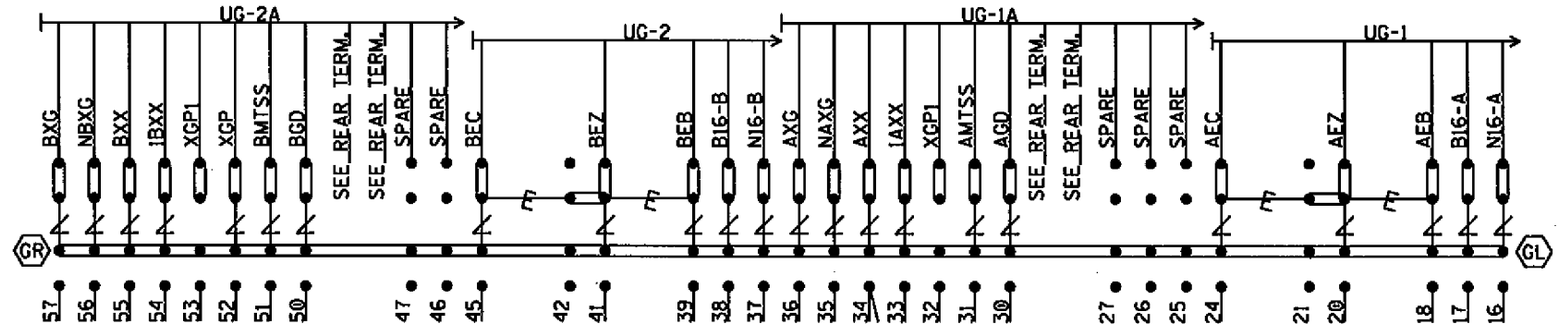

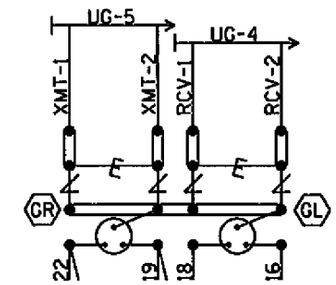

NOTE: INSTALL TEST LINKS ON ALL TRACK WIRES AND ON ALL LOW VOLTAGE UNDERGROUND CABLE TERMINATIONS.

SEE FARADAY SHIELD DETAILS - 1A & 1B FOR HOW THIS PORTION OF THE FARADAY SHIELD IS PREDRILLED. ONLY INSTALL AND USE THE TERMINALS NEEDED.

= Heavy Duty Equalizer (022700-1X)

= Clearview Lightning Arrester (022585-1X)

= LPC-10560-51

GR / GL = TERMINALS GROUNDED TO SHIELD. 4 POST BLOCKS USE EITHER - GR - SERMMI PART NO. 61278 GL - SERMMI PART NO. 61278-1.

BACKBOARD DETAIL - 1A & 1B

DESIGNED BY: RAD 03-03-10	NORFOLK SOUTHERN
DRAWN BY: SSC 03-03-10	OFFICE OF ASS'T. VICE PRESIDENT COMM. & SIGNAL, ATLANTA, GA. — M.P.: 120.85-W
CHECKED BY: MJL 03-04-10	PRINCETON TO E. ST. LOUIS FAIRFIELD, IL FLGS AT CR2200E
IN SERVICE: - -	SOUTHERN-WEST DISTRICT — FILE No. R-
	CADD or DWG. No. SE0148P.16 — SHEET No. 16 of 22

REVISION INITIALS

PROPERTY NORFOLK SOUTHERN RAILWAY CO.

REAR VIEW OF LEFT TWO ROWS TERMINAL BOARD 1

"1A"

"1B"

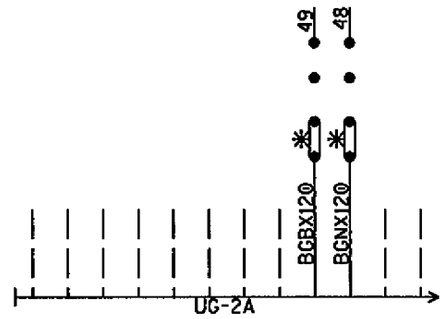

(SEE PREVIOUS SHEET FOR OTHER WIRES IN CABLE)

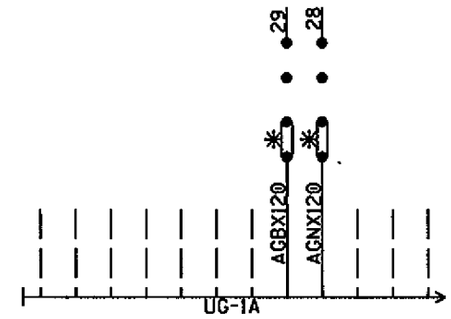

(SEE PREVIOUS SHEET FOR OTHER WIRES IN CABLE)

NOTE: ALL 120VAC AND ABOVE WILL BE WIRED TO THE REAR OF FARADAY BACKBOARD. INSULATED NUTS MUST BE USED ON ALL TERMINALS.

✳ = CLOSED DURING WINTER MONTHS

REAR OF FARADAY BACKBOARD
REAR BACKBOARD DETAIL - 1A & 1B

DESIGNED BY: RAD 03-03-10	NORFOLK SOUTHERN		
DRAWN BY: SSC 03-03-10	OFFICE OF ASS'T. VICE PRESIDENT COMM. & SIGNAL, ATLANTA, GA.	M.P.: 120.85-W	
CHECKED BY: MJL 03-04-10	PRINCETON TO E. ST. LOUIS FAIRFIELD, IL FLGS AT CR2200E		
IN SERVICE: - -	SOUTHERN-WEST DISTRICT	FILE No. R-	
	CADD or DWG. No. SE0148P.17	SHEET No. 17 of 22	

REVISION INITIALS

PROPERTY
NORFOLK SOUTHERN RAILWAY CO.

NOTE: IF THE FARADAY SHIELD WOULD EVER NEED TO BE DRILLED IN THE FIELD, PROPER PRECAUTIONS MUST BE TAKEN TO INSURE METAL SHAVINGS DO NOT GET INTO EXISTING TERMINALS/WIRES.

AREA BELOW IS SCALED WITH AS=.75

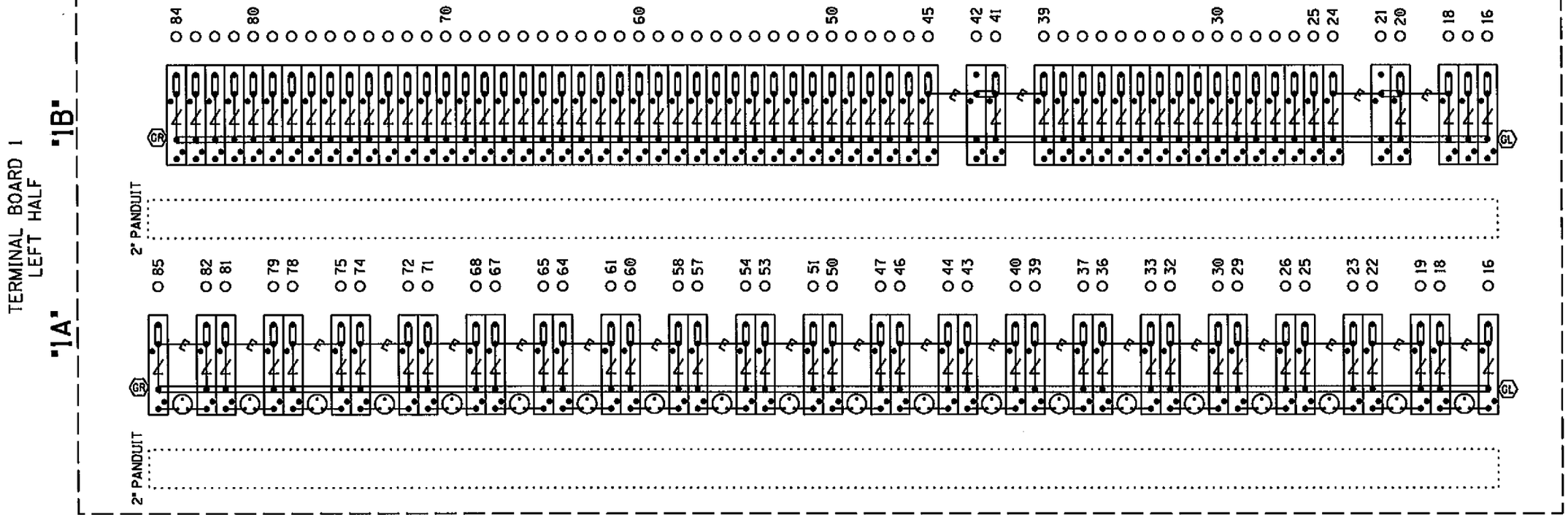

= Heavy Duty Equalizer (022700-1X)

= Clearview Lightning Arrester (022585-1X)

= LPC-10560-51

TERMINAL BOARD 1
LEFT TWO ROWS
FARADAY SHIELD DETAIL - 1A & 1B

= INDICATES PLACEMENT OF PANDUIT

THIS SHEET IS FOR REFERENCE ONLY, TO REFLECT HOW THE FARADAY SHIELD IS PREDRILLED. ONLY INSTALL AND USE THE TERMINALS NEEDED.

GR / GL = TERMINALS GROUNDED TO SHIELD. 4 POST BLOCKS USE EITHER - GR - SERMMI PART NO. 61278 GL - SERMMI PART NO. 61278-1.

DESIGNED BY: RAD 03-03-10	NORFOLK SOUTHERN
DRAWN BY: SSC 03-03-10	OFFICE OF ASS'T. VICE PRESIDENT COMM. & SIGNAL, ATLANTA, GA. M.P.: 120.85-W
CHECKED BY: MJL 03-04-10	PRINCETON TO E. ST. LOUIS FAIRFIELD, IL FLGS AT CR2200E
IN SERVICE: - -	SOUTHERN-WEST DISTRICT FILE No. R-
PROPERTY NORFOLK SOUTHERN RAILWAY CO.	CADD or DWG. No. SE0148P.18 SHEET No. 18 of 22

REVISION INITIALS

NOTE: IF THE FARADAY SHIELD WOULD EVER NEED TO BE DRILLED IN THE FIELD, PROPER PRECAUTIONS MUST BE TAKEN TO INSURE METAL SHAVINGS DO NOT GET INTO EXISTING TERMINALS/WIRES.

AREA BELOW IS SCALED WITH AS=.75

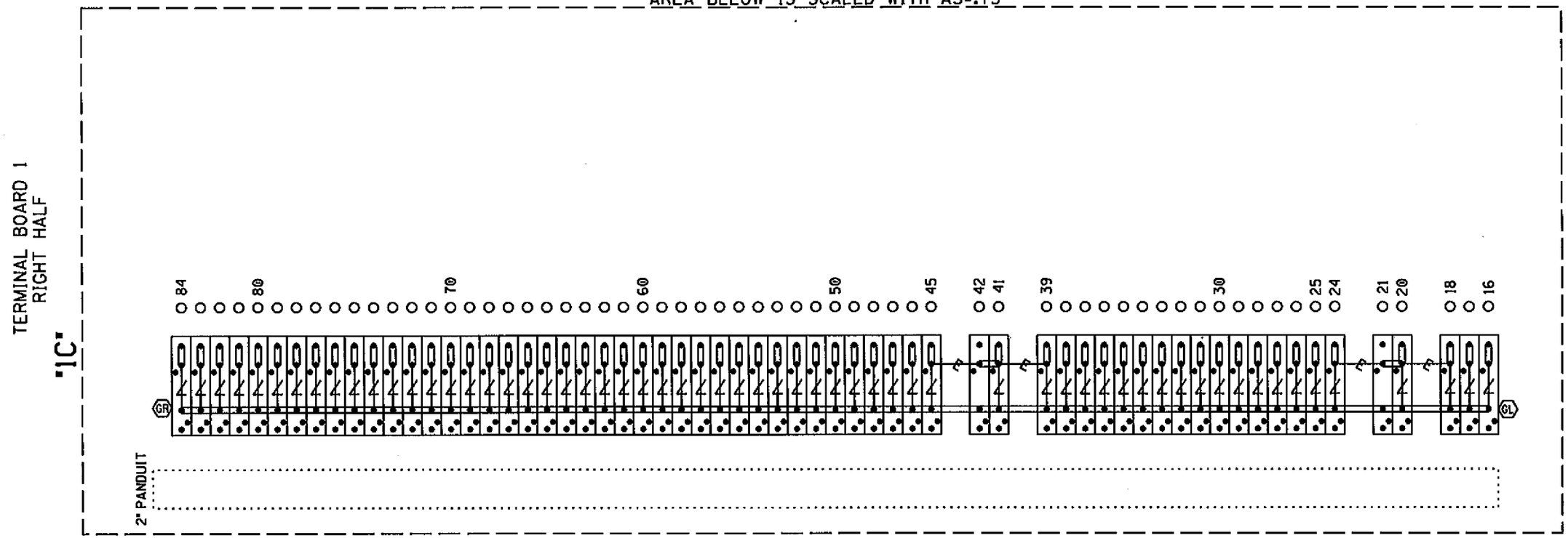

= Heavy Duty Equalizer (022700-1X)

= Clearview Lightning Arrester (022585-1X)

= LPC-10560-51

TERMINAL BOARD 1
RIGHT ROW
FARADAY SHIELD DETAIL - 1C

= INDICATES PLACEMENT OF PANDUIT

THIS SHEET IS FOR REFERENCE ONLY, TO REFLECT HOW THE FARADAY SHIELD IS PREDRILLED. ONLY INSTALL AND USE THE TERMINALS NEEDED.

GR / GL = TERMINALS GROUNDED TO SHIELD. 4 POST BLOCKS USE EITHER - GR - SERMMI PART NO. 61278 GL - SERMMI PART NO. 61278-1.

DESIGNED BY: RAD	03-03-10
DRAWN BY: SSC	03-03-10
CHECKED BY: MJL	03-04-10
IN SERVICE:	- -

NORFOLK SOUTHERN

OFFICE OF ASS'T. VICE PRESIDENT COMM. & SIGNAL, ATLANTA, GA. M.P.: 120.85-W

PRINCETON TO E. ST. LOUIS
FAIRFIELD, IL FLGS AT CR2200E

SOUTHERN-WEST DISTRICT

FILE No. R-

CADD or DWG. No. SE0148P.19

SHEET No. 19 of 22

REVISION INITIALS

PROPERTY
NORFOLK SOUTHERN RAILWAY CO.

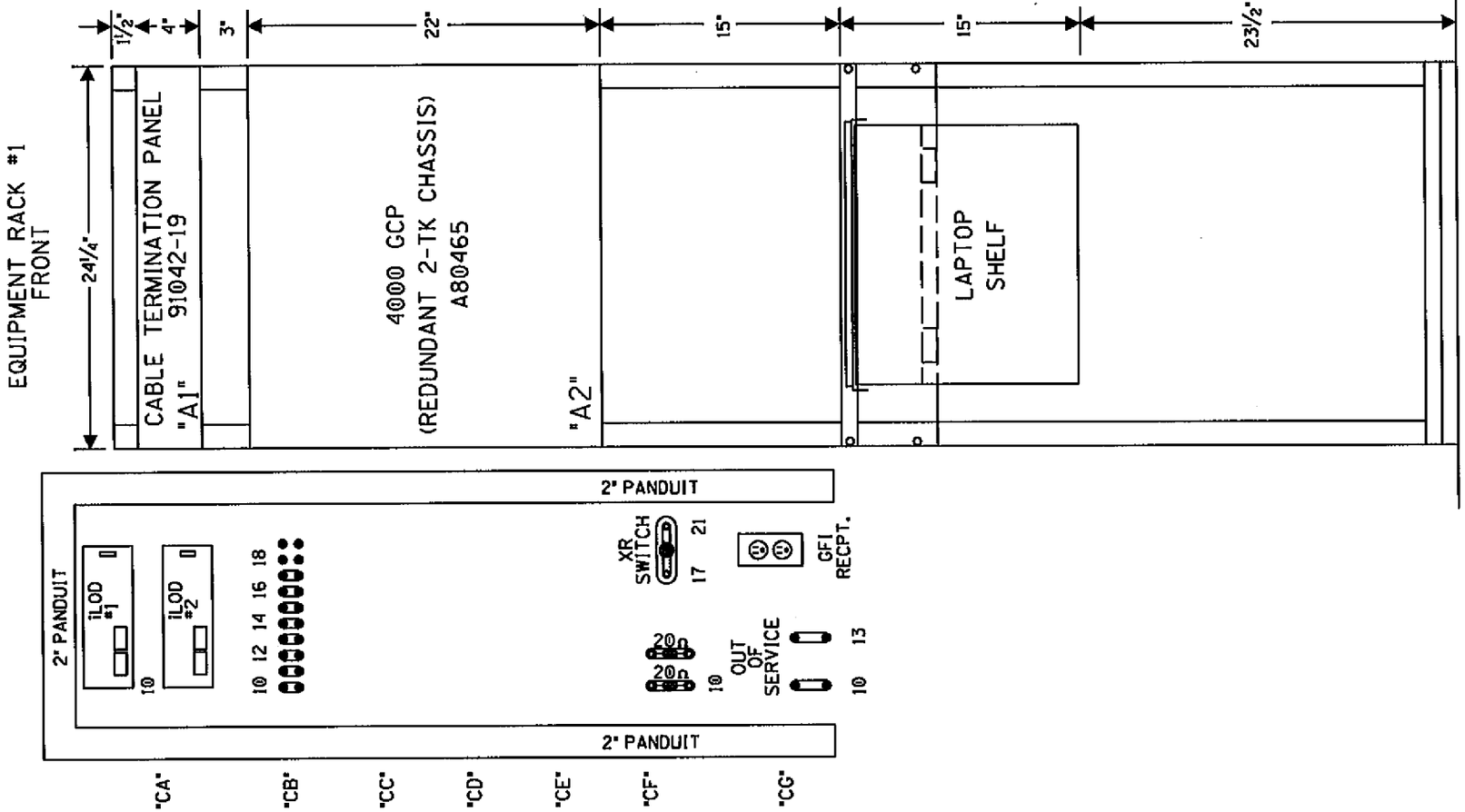

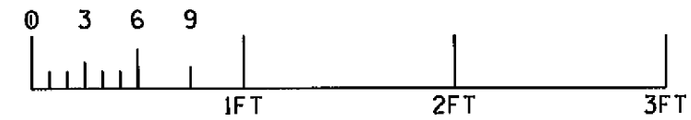

RACK PLACEMENT
6' X 8' HOUSE - SIDE "C"

DESIGNED BY: RAD 03-03-10	NORFOLK SOUTHERN
DRAWN BY: SSC 03-03-10	OFFICE OF ASS'T. VICE PRESIDENT COMM. & SIGNAL, ATLANTA, GA. — M.P.: 120.85-W
CHECKED BY: MJL 03-04-10	PRINCETON TO E. ST. LOUIS FAIRFIELD, IL FLGS AT CR2200E
IN SERVICE: - -	SOUTHERN-WEST DISTRICT — FILE No. R-
	CADD or DWG. No. SE0148P.20 — SHEET No. 20 of 22

REVISION INITIALS

PROPERTY
NORFOLK SOUTHERN RAILWAY CO.

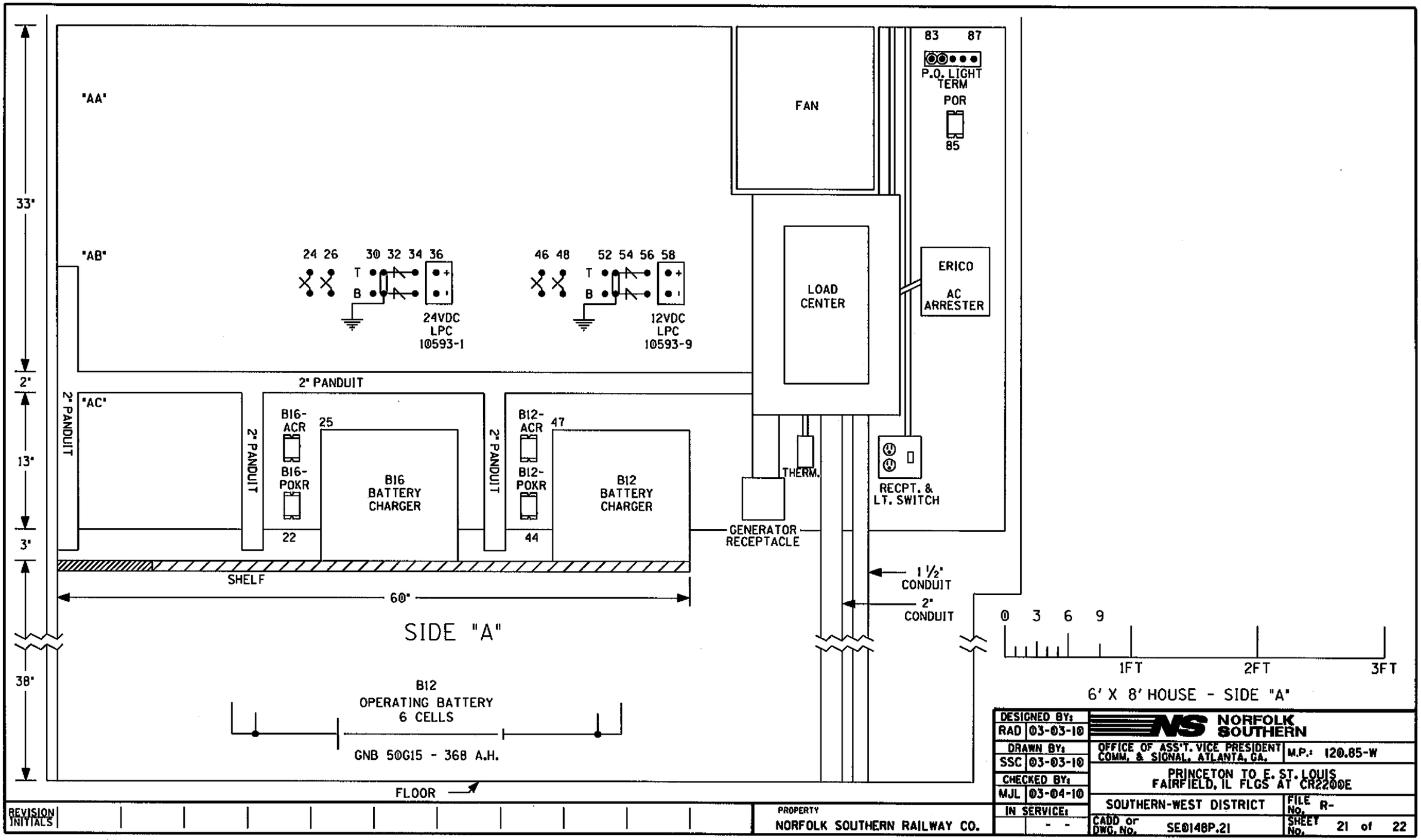
"AA"
"AB"
"AC"
33"
2"
13"
3"
38"
24 26
30 32 34 36
T
B
24VDC
LPC
10593-1
46 48
52 54 56 58
12VDC
LPC
10593-9
2" PANDUIT
2" PANDUIT
2" PANDUIT
2" PANDUIT
BI6-
ACR
25
BI6-
POKR
22
BI6
BATTERY
CHARGER
BI2-
ACR
47
BI2-
POKR
44
BI2
BATTERY
CHARGER
SHELF
60"
SIDE "A"
BI2
OPERATING BATTERY
6 CELLS
GNB 50G15 - 368 A.H.
FLOOR
FAN
LOAD
CENTER
THERM.
GENERATOR
RECEPTACLE
83 87
P.O. LIGHT
TERM
POR
85
ERICO
AC
ARRESTER
RECPT. &
LT. SWITCH
1 1/2"
CONDUIT
2"
CONDUIT
0 3 6 9
1FT
2FT
3FT
6' X 8' HOUSE - SIDE "A"
REVISION
INITIALS
PROPERTY
NORFOLK SOUTHERN RAILWAY CO.
DESIGNED BY:
RAD 03-03-10
DRAWN BY:
SSC 03-03-10
CHECKED BY:
MJL 03-04-10
IN SERVICE:
- -
NORFOLK
SOUTHERN
OFFICE OF ASS'T. VICE PRESIDENT
COMM. & SIGNAL, ATLANTA, GA.
M.P.: 120.85-W
PRINCETON TO E. ST. LOUIS
FAIRFIELD, IL FLGS AT CR2200E
SOUTHERN-WEST DISTRICT
FILE No. R-
CADD or DWG. No. SE0148P.21
SHEET No. 21 of 22

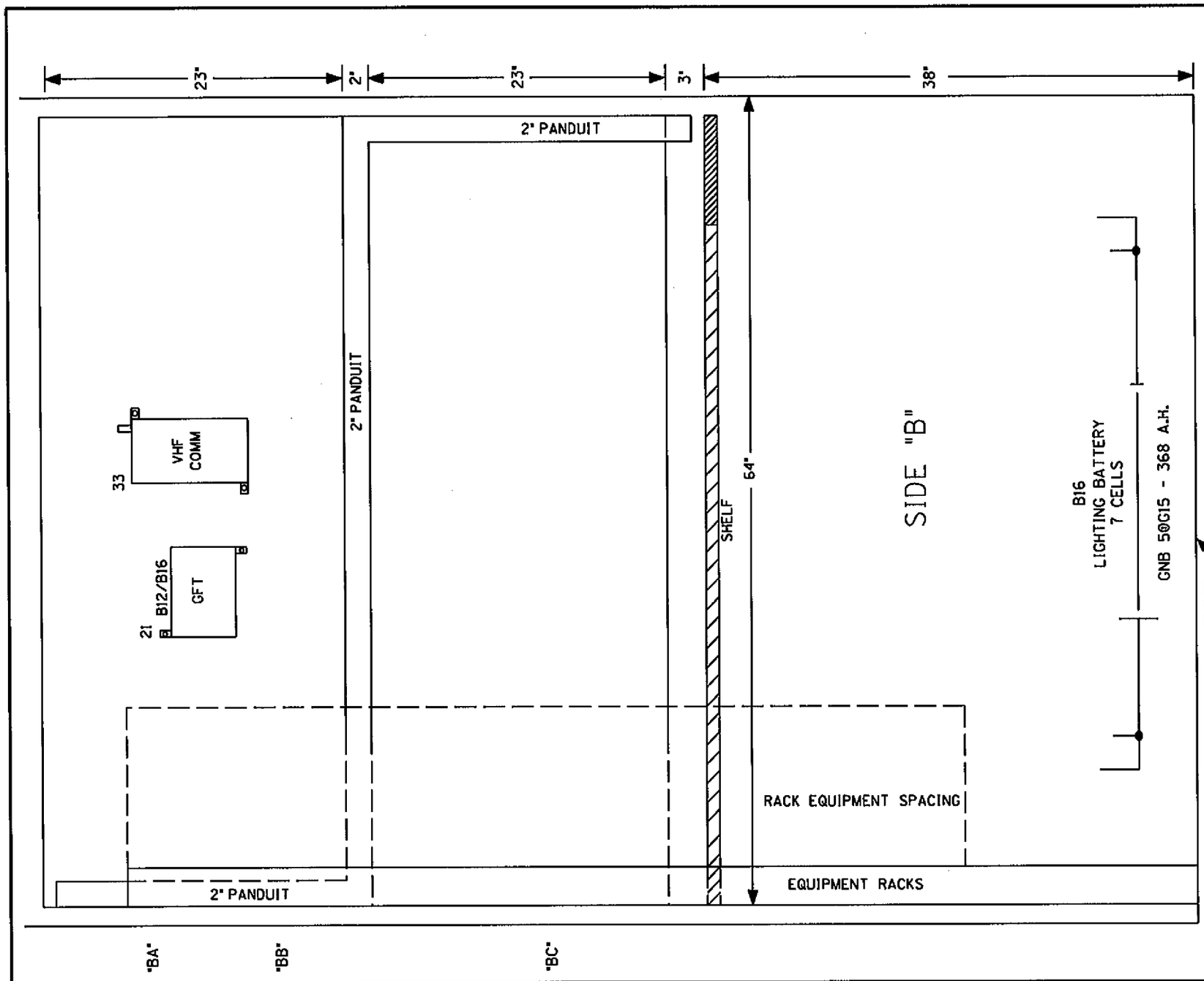

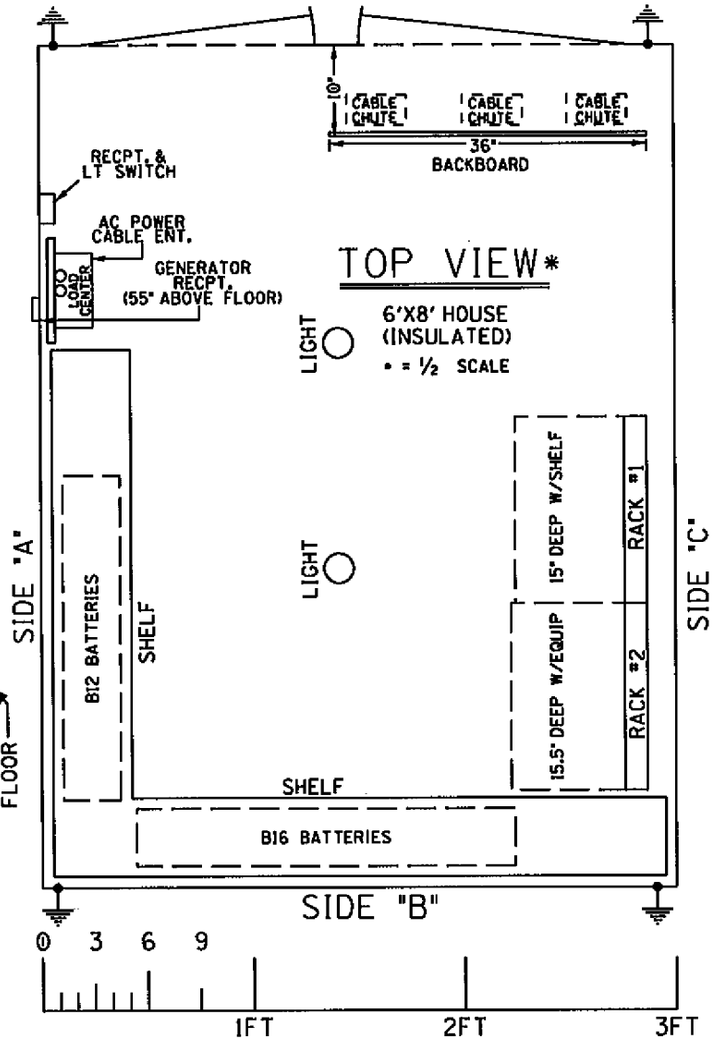

6' X 8' HOUSE (SIDE "B" & TOP VIEW)

DESIGNED BY: RAD 03-03-10	NORFOLK SOUTHERN	
DRAWN BY: SSC 03-03-10	OFFICE OF ASS'T. VICE PRESIDENT COMM. & SIGNAL, ATLANTA, GA.	M.P.: 120.85-W
CHECKED BY: MJL 03-04-10	PRINCETON TO E. ST. LOUIS FAIRFIELD, IL FLGS AT CR2200E	
IN SERVICE: - -	SOUTHERN-WEST DISTRICT	FILE No. R-
	CADD or DWG. No. SE0148P.22	SHEET No. 22 of 22

REVISION INITIALS

PROPERTY
NORFOLK SOUTHERN RAILWAY CO.