INDEX

CONTENTS

SH. NO.		REVISION NO. 1	2	3	4	5	6	7	8	9
I01	INDEX AND REVISIONS	╱								
S01	TRACK AND SIGNAL PLAN	╱								
E01	POWER DISTRIBUTION	╱								
C01	CROSSING DETECTION CIRCUITRY	╱								
C02	DETECTION DEVICE PROGRAM	╱								
C03	CROSSING WARNING DEVICE GATE CIRCUITRY	╱								
C04	CROSSING WARNING DEVICE LIGHT CIRCUITRY	╱								
C05	RECORDER AND DTMF CONTROLLER CIRCUITS	╱								
C06	RECORDER PROGRAM	╱								

╱ = DESIGN COMPLETED

╳ = REVISION COMPLETED

REVISIONS

REV. NO.	PROJECT NO.	DESIGN DATE	IN SERVICE DATE	REVISION DATE
1	IL2010018	09-15-10		

TO BE COMPLETED ON A.I.S.

= NOTE

NEW WORK

CXD1026558 IL2010018

09-15-10 XRL/V.ROGERS/

xorail

1TRKHXP3R.I01
REV. 02-17-06

CSX TRANSPORTATION

RAIL TRANSPORT GROUP ENGINEERING
COMMUNICATIONS AND SIGNALS

SKILLET FORK RD. 152924Y

(2100E)

INDEX AND REVISIONS

IUKA, IL M.P. BC-257.32

DESIGNED	DIGITIZED	CHECKED	DATE
XRL/VJR	XRL/VJR	XRL	09-15-10

DESIGN DATE	REV. NO.	DRAWING	SHEET NO	FILE	SHEET
09-15-10	1	-----	-----	BC25732	I01

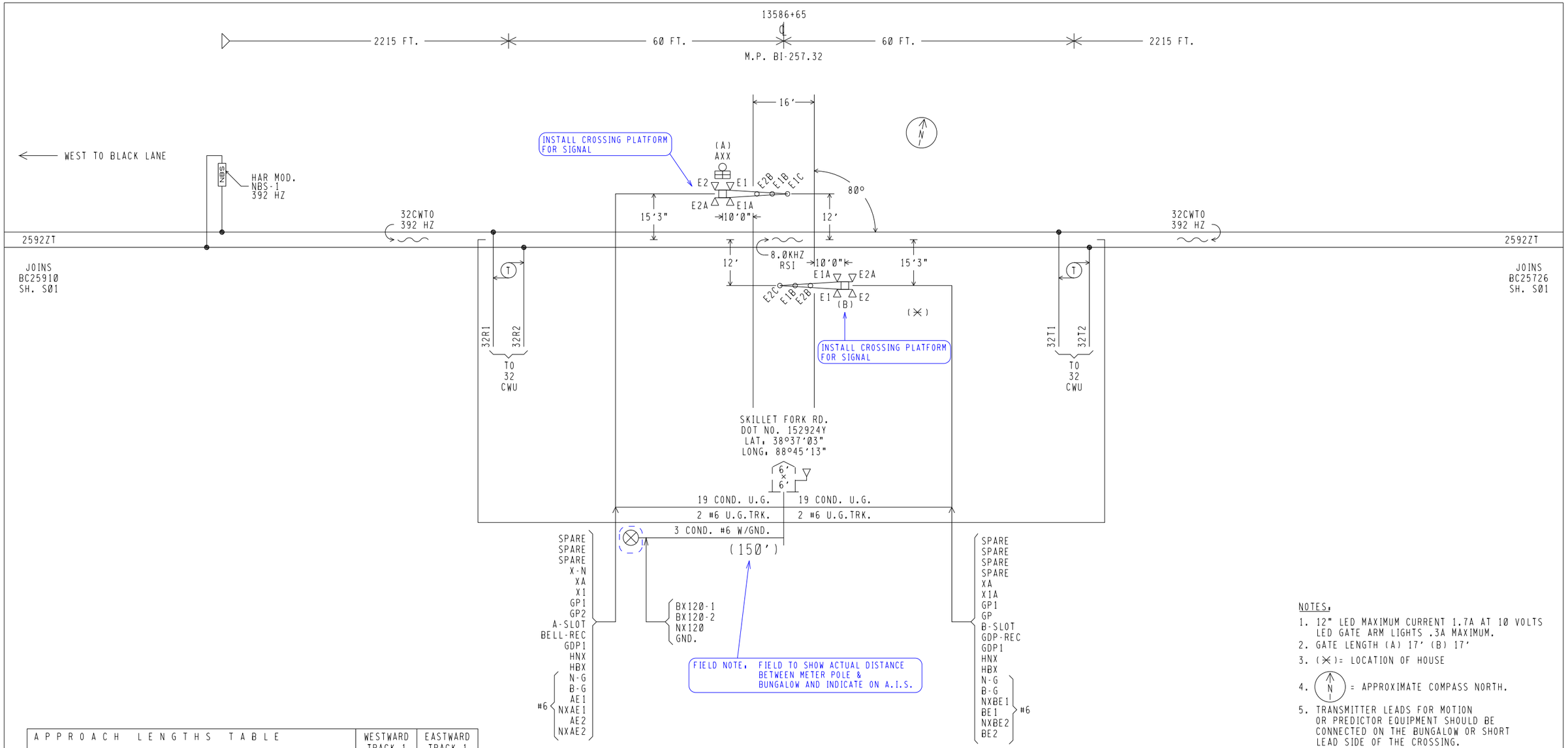

APPROACH LENGTHS TABLE DC, AFO, TYPE C, MOTION, CWT, OR OTHER	WESTWARD TRACK 1 MOT	EASTWARD TRACK 1 MOT
STANDARD MINIMUM WARNING TIME IN SECONDS	25	25
ROADWAY GATE TIME IN SECONDS	5	5
CLEARANCE TIME IN SECONDS	0	0
DOT TRAFFIC LIGHT SIMULTANEOUS PREEMPT TIME IN SECONDS✳	0	0
DESIGNED WARNING TIME FOR TRAINS AT TIME TABLE SPEED	30 SEC.	30 SEC.
DOT TRAFFIC LIGHT ADVANCE PREEMPT TIME IN SECONDS ✳	0	0
CONTROL EQUIPMENT DECISION TIME IN SECONDS	4	4
DESIGNED DETECTION TIME FOR TRAINS AT TIME TABLE SPEED	34 SEC.	34 SEC.
TIME TABLE MAXIMUM TRAIN SPEED IN MILES PER HOUR	40	40
BUFFER SPEED IN MILES PER HOUR	5	5
TOTAL WARNING SYSTEM DESIGN SPEED IN MILES PER HOUR	45	45
APPROACH DISTANCE TO ISLAND EDGE IN FEET	2215	2215
HALF WIDTH OF ISLAND IN FEET	60	60
APPROXIMATE MILE POSTS FOR APPROACH CIRCUIT	257.74	256.90

✳AUTHORIZING AGENCY. NONE
✳DATE OF REQUIREMENT. NONE
✳AMOUNT OF TIME (SEC.). NONE

NOTES.

1. 12" LED MAXIMUM CURRENT 1.7A AT 10 VOLTS LED GATE ARM LIGHTS .3A MAXIMUM.
2. GATE LENGTH (A) 17' (B) 17'
3. (✳)= LOCATION OF HOUSE
4. (N) = APPROXIMATE COMPASS NORTH.
5. TRANSMITTER LEADS FOR MOTION OR PREDICTOR EQUIPMENT SHOULD BE CONNECTED ON THE BUNGALOW OR SHORT LEAD SIDE OF THE CROSSING.
6. ISLAND TRACK LEADS SHOULD BE CONNECTED 50 FEET FROM ROAD EDGE BUT ON NARROW ROADS (20' OR LESS) ISLAND LENGTH SHALL BE 120 FEET.
7. WARNING SYSTEM APPROACH CIRCUIT DISTANCES ARE TO BE MEASURED FROM THE ISLAND TRACK CONNECTIONS.

= NOTE

= EXISTING

NEW WORK
CXD1026558 IL2010018
09-15-10 XRL/V.ROGERS/
xorail

1TRKHXP3R.S01
REV. 02-17-06

CSX TRANSPORTATION
RAIL TRANSPORT GROUP ENGINEERING
COMMUNICATIONS AND SIGNALS

SKILLET FORK RD. 152924Y
(2100E)
TRACK AND SIGNAL PLAN
IUKA, IL M.P. BC-257.32

DESIGNED	DIGITIZED	CHECKED	DATE
XRL/VJR	XRL/VJR	XRL	09-15-10

DESIGN DATE	REV. NO.	DRAWING	SHEET NO	FILE	SHEET
09-15-10	1	-----	-----	BC25732	S01

TOP ROW

						XR	XPR	GPR	EOR		POR		
						12 FB 15 FB 22 23 25 F 32 35 B8 C30	22 F 25 F B36 C30	12 B 15 B 22 25 32 F 35 B B82 C30	12 FB 15 FB 32 FB 35 FB B81 C30		12 FB 15 FB 22 FB 25 FB 32 F 35 B62 C30		

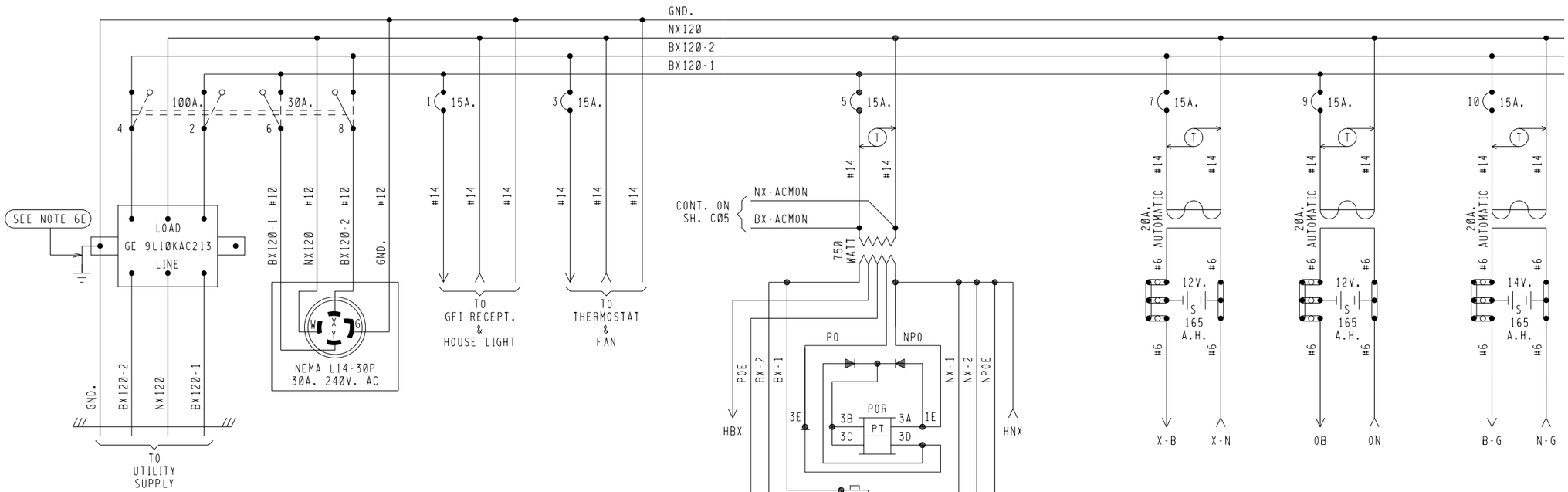

BX120-1	BX120-2
16.25 AMPS	14.0 AMPS

MAXIMUM LOAD
CALCULATED PER SS360

NOTES:

1 - REFERENCES ARE PER SCMS-13.
2 - ARRESTERS ARE PER SS382.
3 - SHELF RELAY PLACEMENT ON CONSIST CHART HAS NO SIGNIFICANCE.
4 - PLUG-IN RELAYS ARE VIEWED FROM THE FRONT OF RACK.
5 - BATTERY A.H. CAPACITY SHOWN IS THE MINIMUM REQUIREMENT.
6 - WIRING
  A - FEED TO ALL BUSSES, LIGHT CIRCUITS,MOTOR CIRCUITS TO BE #10 FLEX.
  B - 120-VOLT FEED FROM ENTRANCE TO POWER BUSS TO BE #10 FLEX.
  C - ALL TRACK WIRES TO BE #10 FLEX.
  D - ALL OTHERS TO BE #16 FLEX UNLESS NOTED.
  E - GROUND WIRE NOT NECESSARY WHEN GE ARRESTER IS MOUNTED ON GROUND PLANE OR METAL ENCLOSURE AFFIXED DIRECTLY TO BUNGALOW METALLIC STRUCTURAL MEMBER.
7 - CIRCUIT INTERRUPTERS 2 & 4 ARE MECHANICALLY INTERLOCKED WITH CIRCUIT INTERRUPTERS 6 & 8.

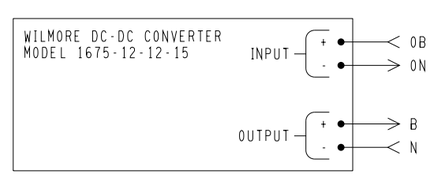

= NOTE

NEW WORK
CXD1026558 IL2010018
09-15-10 XRL/V.ROGERS/
xorail

6'X 6' RELAY HOUSE W/FARADAY SHIELD

CSX TRANSPORTATION
RAIL TRANSPORT GROUP ENGINEERING
COMMUNICATIONS AND SIGNALS

SKILLET FORK RD. 152924Y
(2100E)
POWER DISTRIBUTION
IUKA, IL M.P. BC-257.32

1TRKHXP3R.E01
REV. 08-29-08

DESIGNED	DIGITIZED	CHECKED	DATE
XRL/VJR	XRL/VJR	XRL	09-15-10

DESIGN DATE	REV. NO.	DRAWING	SHEET NO	FILE	SHEET
09-15-10	1	-----	-----	BC25732	E01

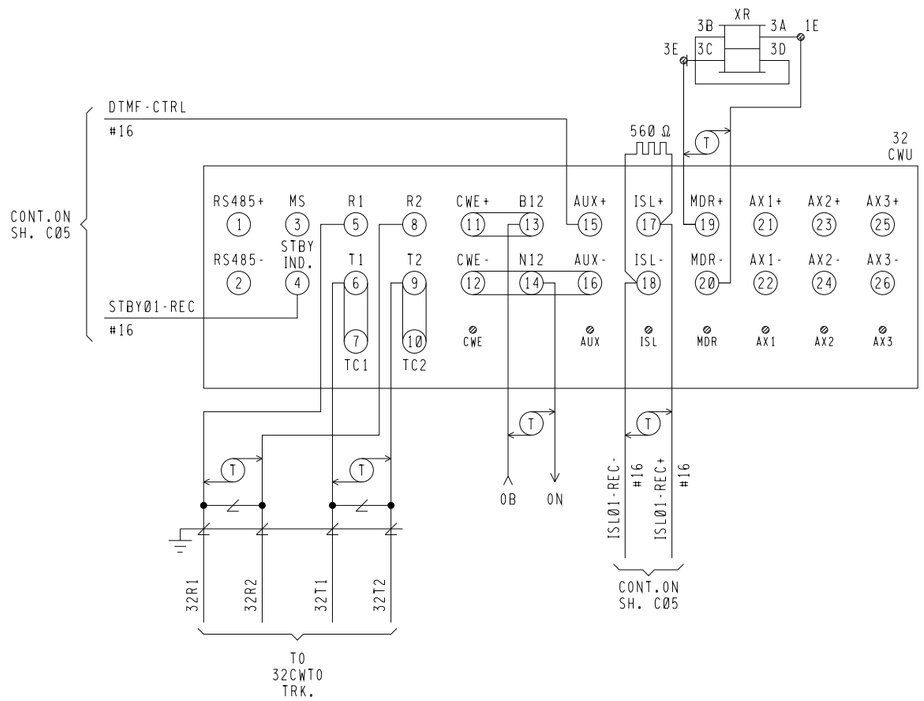

32CWU
HXP-3R MODULES REQUIRED

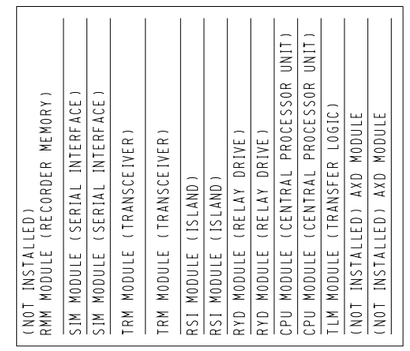

FRONT VIEW

RSI MODULE
226736-000 8.0KHZ

ISLAND FREQ.
8.0KHZ

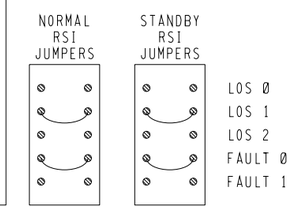

32
CWU

CABINET SWITCHES
THESE SWITCHES ARE LOCATED ON MOTHERBOARD
MASTER/SLAVE MASTER — SLAVE S1

SYSTEM CONFIGURATION				
S6 & S7 DIP SWITCH POSITIONS				
SWITCH	1	2	3	4
SWITCH POSITION	ON	OFF	OFF	OFF
APPROACH,	NORMAL		(NOT USED)	

	FREQUENCY SELECT					
NORMAL	S2 & S3 DIP SWITCH POSITIONS 392 HZ					
	SWITCH	1	2	3	4	5
	SWITCH POSITION	OFF	OFF	ON	ON	OFF
STANDBY	S4 & S5 DIP SWITCH POSITIONS 392 HZ					
	SWITCH	1	2	3	4	5
	SWITCH POSITION	OFF	OFF	ON	ON	OFF

TLM MODULE
JUMPERS AND SWITCHES

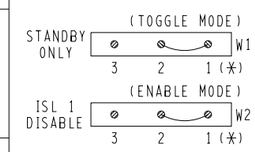

NOTE.
PIN 1 IS IDENTIFIED BY ASTERICK BELOW IT.
(☆) = MAY BE SET PER FIELD CONDITIONS.

MINUTE TIMEOUT SWITCH

SETTING	(☆) 9 MINUTES	S1

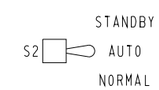

NEW WORK
CXD1026558 IL2010018
09-15-10 XRL/V.ROGERS/
xorail

CSX TRANSPORTATION
RAIL TRANSPORT GROUP ENGINEERING
COMMUNICATIONS AND SIGNALS

SKILLET FORK RD. 152924Y
(2100E)
CROSSING DETECTION CIRCUITRY
IUKA, IL M.P. BC-257.32

1TRKHXP3R.C01
REV. 08-31-09

DESIGNED	DIGITIZED	CHECKED	DATE
XRL/VJR	XRL/VJR	XRL	09-15-10

DESIGN DATE	REV. NO.	DRAWING	SHEET NO	FILE	SHEET
09-15-10	1	-----	-----	BC25732	C01

32CWU

HXP-3R APPLICATION DESIGN CARD

OPTION 90 (CABINET #)	CABINET #

PASSWORD(_ _✳_ _)(SEE MANUAL 100052-001 AA0 1-27	TRACK 1	TRACK 2	DEFAULT
APPROACH LENGTH ADJUSTMENT	2215'	N/A	9,999 FT.
WARNING TIME ADJUSTMENT	30 SEC.	N/A	99 SEC.
LUMPED IMPEDANCE ADJUSTMENT (LIA)	✳	N/A	0
TRANSMITTER CHECK ADJUSTMENT (TC)	✳	N/A	0
MOTION DETECT RESTART (MD RESTART)	0 ☆	N/A	99%
OPTION 1 TRACK ENABLE (TK-ENA)	UP	N/A	UP (ALWAYS ENABLED)
OPTION 2 TRACK FREQUENCY (TK FO)	STRAP ◇	N/A	0 HZ
OPTION 3 CONSTANT WARNING/MOTION (CW/MD)	d	N/A	d (Motion)
OPTION 4 UNI/BIDIRECTIONAL (UNI-BI)	b	N/A	b (bi)
OPTION 5 NARROW BAND COMPENSATION (NBS-C)	⊗	N/A	9,999 FT.
OPTION 6 CWE WARNING TIME (CWEWT)	80 SEC.	N/A	80 SEC.
OPTION 7 LOSS OF SHUNT TIME (LOS)	16 SEC.	N/A	16 SEC.
OPTION 8 LOS W/JOINTS NEAR ISLAND (IJ-LOS)	5 SEC. ✳✳	N/A	5 SEC.
OPTION 9 BALLAST COMPENSATION (BC)	✳	N/A	FREQUENCY DEPENDANT ◎
OPTION 10 PHASE COMPENSATION ADJUSTMENT (P-COMP)	~~✳✳✳~~	N/A	0°

AX OPTIONS △		OPTION 11 AX DRIVE #1	OPTION 12 AX DRIVE #2	OPTION 13 AX DRIVE #3	DEFAULT
ITEM 1	TRACK ASSIGNMENT (TK-ASN)	N/A	N/A	N/A	1
ITEM 2	OFFSET DISTANCE TRACK 1 (OF-TK1)	0000'	0000'	0000'	0 FT.
ITEM 3	OFFSET DISTANCE TRACK 2 (OF-TK2)	N/A	N/A	N/A	N/A
ITEM 4	WARNING TIME (WT)	99 SEC.	99 SEC.	99 SEC.	99 SEC.
ITEM 5	MOTION DETECT RESTART (MD-RST)	99 %	99 %	99 %	99 %
ITEM 6	CONSTANT WARNING/MOTION (CW/MD)	d	d	d	d (Motion)
ITEM 7	CLEAR JOINTS LOS (CJ-LOS)	00 SEC.	00 SEC.	00 SEC.	0 SEC.
ITEM 8	POST JOINT DETECTION (PJ-DET)	15 SEC.	15 SEC.	15 SEC.	15 SEC.
ITEM 9	POST JOINT RX (PJ-RX)	15	15	15	15
ITEM 10	POSITIVE START	dn	dn	dn	dn
OPTION 17 MDR DRIVE OR AX RELAY DRIVE SELECTION (MDR-AX)			◎	N/A	dn (STATUS ONLY) ◎

OPTION 17 SUB-MENU		TRACK 1	TRACK 2	DEFAULT
ITEM 1	MDR-AX OFFSET DISTANCE TRK. 1(OF-TK1) & TRK. 2(OF-TK2)	0000'	N/A	0 FT.= CONFIGURED AS MDR
ITEM 2	MDR-AX CLEAR JOINT LOS TIME (CJ-LOS)	00 SEC.	N/A	0 SEC.
ITEM 3	MDR-AX POST JOINT DETECTION TIME (PJ-DET)	15 SEC.	N/A	15 SEC.
ITEM 4	POST JOINT RX (PJ-RX)	15	N/A	15 (0 = DISABLE)
OPTION 18 MOTION DETECTOR TIMER (MD-TMR)		10 MIN.	N/A	10 MIN. (0 = DISABLE)
OPTION 19 MINIMUM WARNING TIME WITH ADVANCED PREEMPTION (MIN-WT)		00 SEC.	N/A	00 SEC. (0 = DISABLE)
OPTION 20 FALSE SHUNT TIMER ADJUSTMENT (FS-TMR)				
ITEM 1	FALSE SHUNT RX (FS-RX)	0	N/A	0, 0 = DISABLE
ITEM 2	FALSE SHUNT TIMER ADJUSTMENT (FS-TM)	10	N/A	10
OPTION 21 POSITIVE START RX & TIMER ADJUSTMENT (POS-ST)				
ITEM 1	POSITIVE START RX (POS-RX)	0	N/A	0, 0 = DISABLE
ITEM 2	POSITIVE START TIMER (POS-TM)	10	N/A	10
OPTION 22 APPROACH RELEASE RX (AR-TM)				
ITEM 1	APPROACH RELEASE RX (AR-RX)	0	N/A	0, 0 = DISABLE
ITEM 2	APPROACH RELEASE TIMER (AR-TM)	10	N/A	10
OPTION 47 AUTO RX ADJUSTMENT (ATO-RX)		dn	N/A	dn = DISABLE
OPTION 48 PREDICTIVE FILTER ENABLE/DISABLE (PF-ENA)		dn	N/A	dn = DISABLE
OPTION 49 RESET LOCAL PARAMETERS TO DEFAULT SETTINGS (RESET)				PAGE 3-14 & 3-41
OPTION 50 RECORDER PRINTER CONTROL (PRNTR)		⊕		PAGE 1-47 & 3-41
OPTION 51 CLOCK ADJUSTMENT (CLOCK)		⊕		PAGE 3-32
OPTION 70 LOCAL SERIAL I/O PORT ADJUSTMENT (LSP)				
ITEM 1	BAUD RATE	38.4	⊕	PAGE 1-47 & 3-42
ITEM 2	DBITS (DATA BITS)	8	⊕	PAGE 1-47 & 3-42
ITEM 3	PA (PARITY)	NO(-=NO PARITY)	⊕	PAGE 1-47 & 3-42
OPTION 90 CABINET NUMBER DISPLAY (CAB)		✳		PAGE 1-47 & 3-41
OPTION 91 HXP-3 OPERATING PROGRAM VERSION NUMBER (VERS)		✳		VERSION 35.0
OPTION 99 RESET PASSWORD TIMER (TIMER)		⊕		PAGE 3-30

NOTE:

✳ = ENTRY TO BE DONE ON AS-IN-SERVICE.

☆ = NORMALLY SET AT "0" SEE MANUAL 100052-001 AA0 PG. 1-46 & 3-41.

◇ = THE WORD STRAP IS DISPLAYED WHEN FREQUENCY SELECT DIP SWITCHES USED TO SELECT A STANDARD FREQUENCY.

⊗ = ADJUSTMENT NECESSARY ONLY WHEN AX RELAY DRIVE MODULE USED.

✳✳ = ADJUSTMENT NECESSARY IF INSULATED JOINTS ARE LOCATED NEAR ISLAND CIRCUIT.

~~✳✳✳~~ = ADJUSTMENT NECESSARY ONLY IF VERY POOR BALLAST CONDITIONS NEED TO BE COMPENSATED.

◎ = OPTION 17 SUB-MENU USED ONLY WHEN AX RELAY DRIVE OPERATION IS SELECTED. ENTERING AN OFFSET DISTANCE VALUE OTHER THAN ZERO ASSIGNS A MDR AS AN AX DRIVE.

△ 1. WHEN AXD MODULES ARE NOT INSTALLED, THEIR ASSOCIATED OPTIONS AND ADJUSTMENTS ARE NOT DISPLAYED.
2. PROGRAM UNUSED AX OPTION(S) SAME AS OPTION 11. IF AX OPTION 12 OR 13 IS USED IN FUTURE THEN REPROGRAM AS APPLICABLE.

◎ = FREQUENCY DEPENDANT, RANGE BETWEEN 50-250 TO BE SUPPLIED ON AS-IN-SERVICE.

⊕ = OPTIONS 50-99 ARE NON-VITAL AND NOT REQUIRED FOR INITIAL SETUP. SEE MANUAL 100052-001 AA0. FOR OPTIONS 49 TO 99 SEE PAGES AS LISTED IN DEFAULT COLUMN.

⊕ = SET CORRECT LOCAL TIME AND DATE. TIME OF DAY SHOULD BE SYNCRONIZED WITH TIME SHOWN BY EXTERNAL EVENT RECORDER.

NEW WORK
CXD1026558 IL2010018
09-15-10 XRL/V.ROGERS/
xorail

CSX TRANSPORTATION
RAIL TRANSPORT GROUP ENGINEERING
COMMUNICATIONS AND SIGNALS

SKILLET FORK RD. 152924Y
(2100E)
DETECTION DEVICE PROGRAM
IUKA, IL M.P. BC-257.32

1TRKHXP3R.C02
REV. 10-31-07

DESIGNED	DIGITIZED	CHECKED	DATE
XRL/VJR	XRL/VJR	XRL	09-15-10

DESIGN DATE	REV. NO.	DRAWING	SHEET NO	FILE	SHEET
09-15-10	1	-----	-----	BC25732	C02

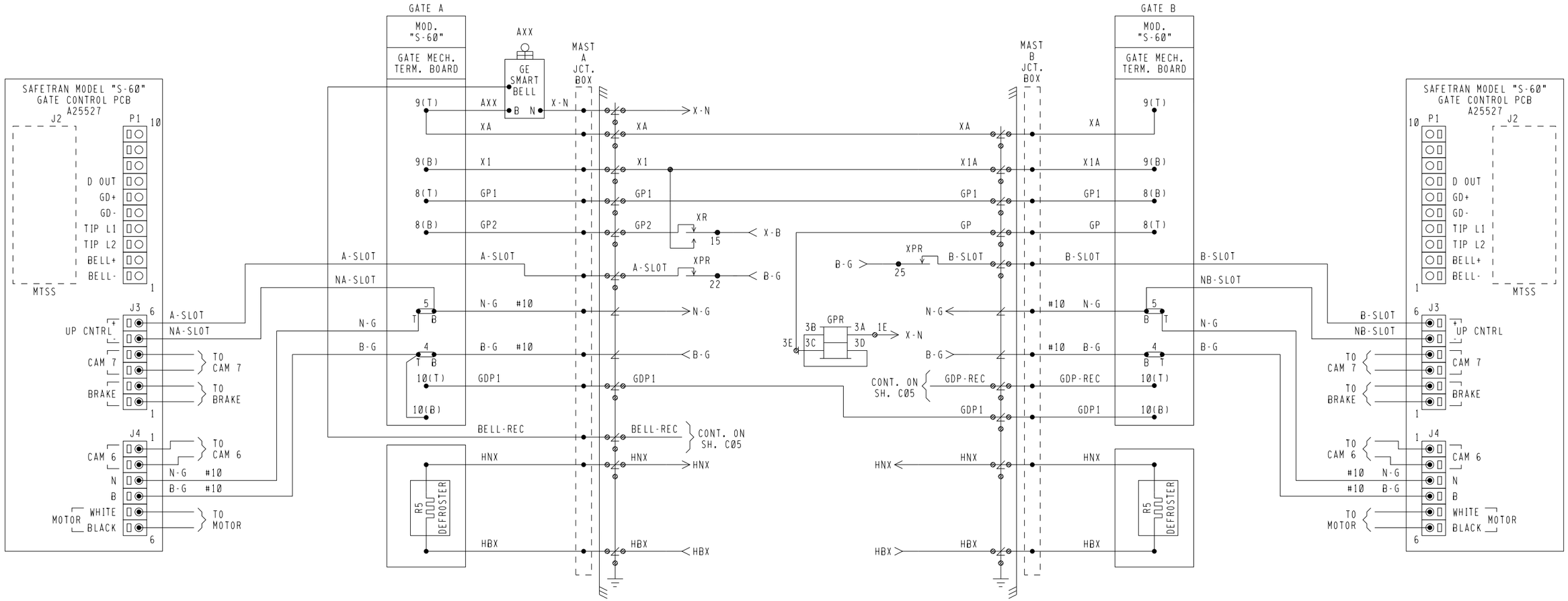

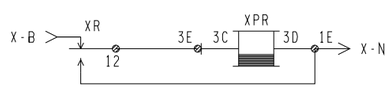

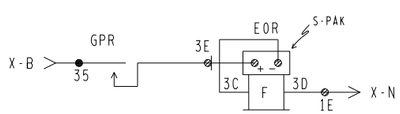

NOTES:

1. = TERMINAL IN JCT. BOX BASE
2. ALL WIRING #16 UNLESS NOTED OTHERWISE.

NEW WORK
CXD1026558 IL2010018
09-15-10 XRL/V.ROGERS/
xorail

CSX TRANSPORTATION
RAIL TRANSPORT GROUP ENGINEERING
COMMUNICATIONS AND SIGNALS

SKILLET FORK RD. 152924Y
(2100E)
CROSSING WARNING DEVICE GATE CIRCUITRY
IUKA, IL M.P. BC-257.32

PMD3RCPML.C03
REV. 01-08-10

DESIGNED	DIGITIZED	CHECKED	DATE
XRL/VJR	XRL/VJR	XRL	09-15-10

DESIGN DATE	REV. NO.	DRAWING	SHEET NO	FILE	SHEET
09-15-10	1	-----	-----	BC25732	C03

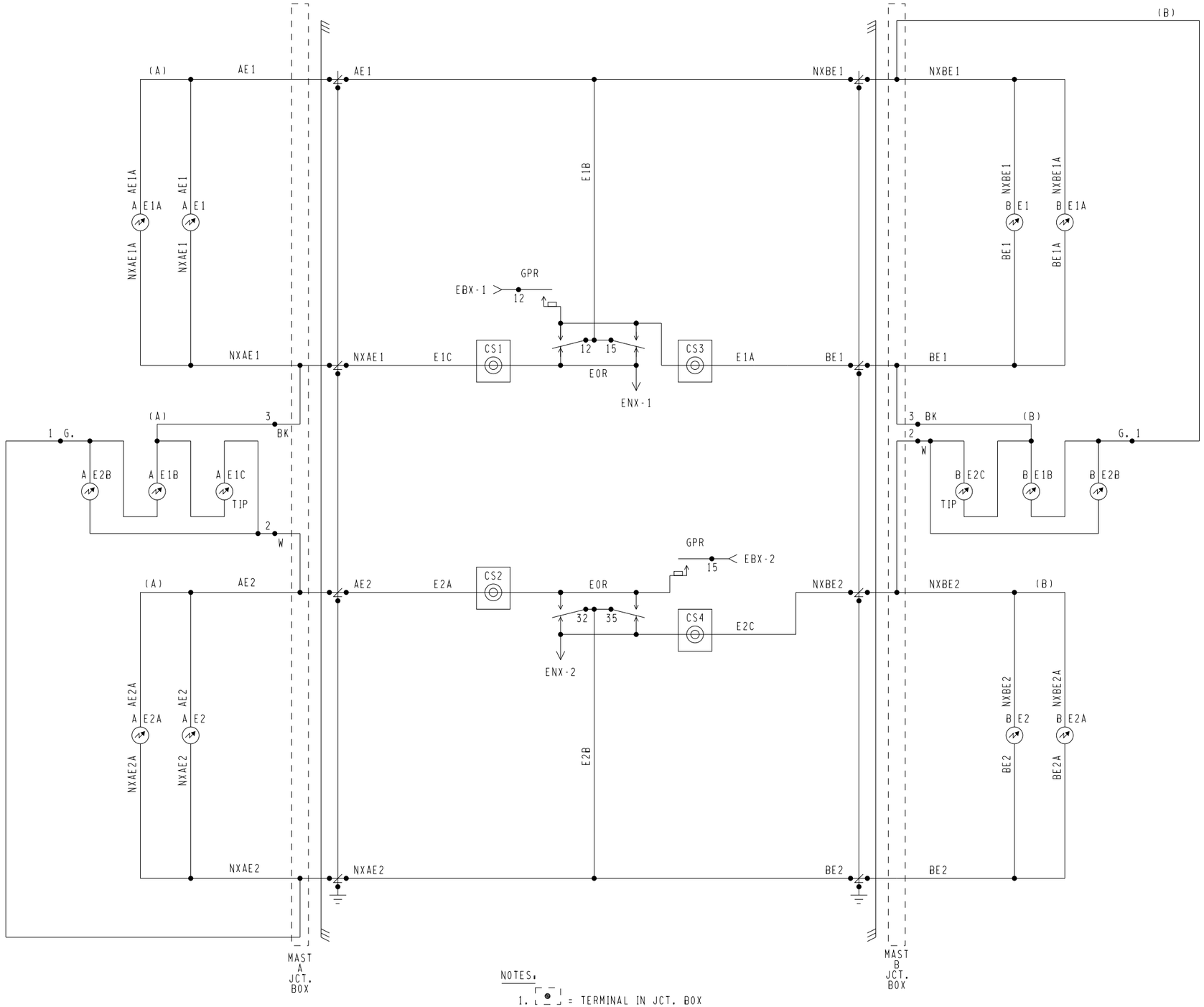

NOTES:

1. [ ] = TERMINAL IN JCT. BOX
2. WHEN 7 OR MORE LIGHTS ON A SINGLE STRUCTURE REFER TO SS-382 FOR REQUIRED ARRESTER RATING.

NEW WORK
CXD1026558 IL2010018
09-15-10 XRL/V.ROGERS/
xorail

CSX TRANSPORTATION
RAIL TRANSPORT GROUP ENGINEERING
COMMUNICATIONS AND SIGNALS

SKILLET FORK RD. 152924Y
(2100E)
CROSSING WARNING DEVICE LIGHT CIRCUITRY
IUKA, IL M.P. BC-257.32

PMD3RCPML.C04
REV. 01-08-10

DESIGNED	DIGITIZED	CHECKED	DATE
XRL/VJR	XRL/VJR	XRL	09-15-10

DESIGN DATE	REV. NO.	DRAWING	SHEET NO	FILE	SHEET
09-15-10	1	-----	-----	BC25732	C04

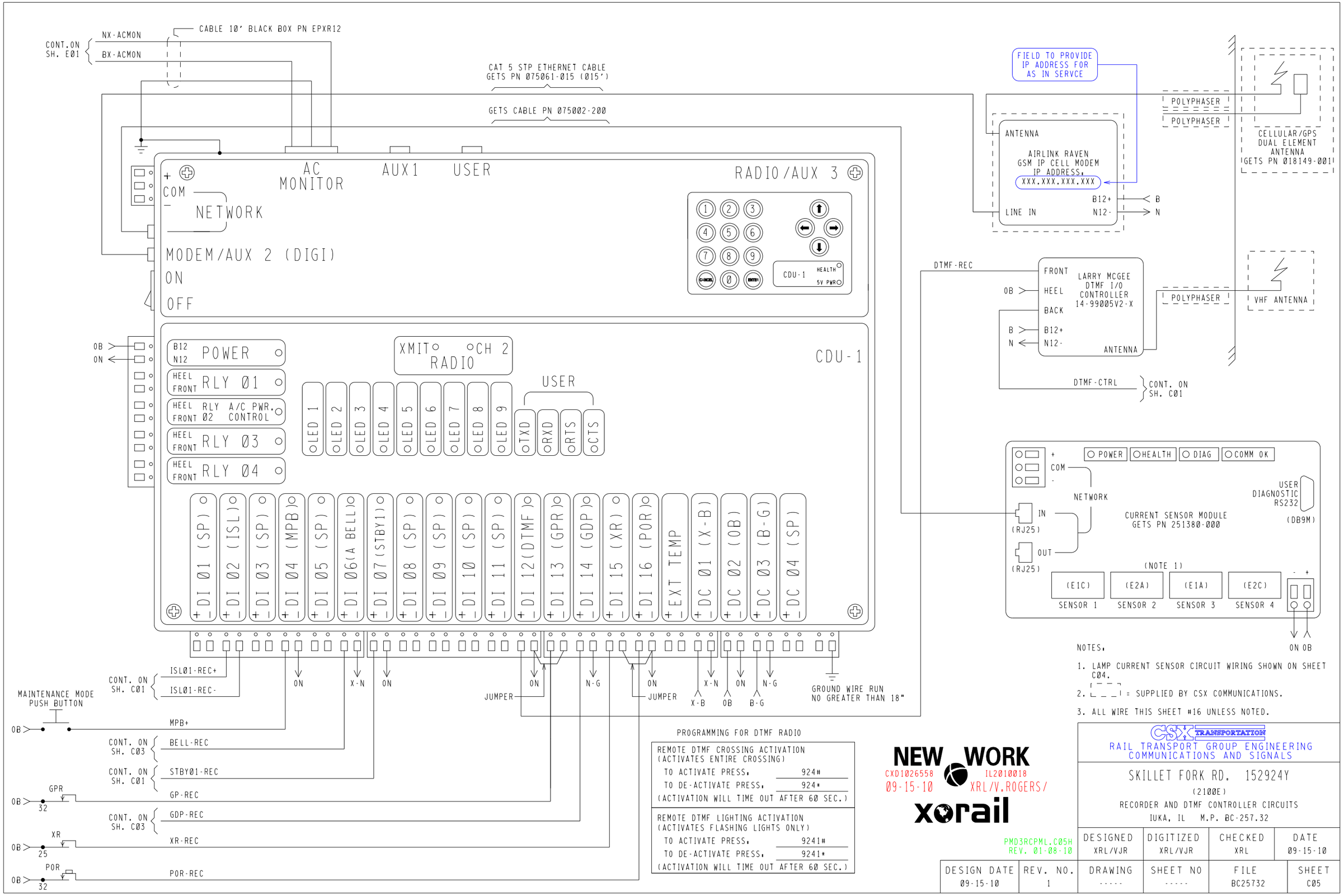

NOTES:

1. LAMP CURRENT SENSOR CIRCUIT WIRING SHOWN ON SHEET C04.
2. [ ] = SUPPLIED BY CSX COMMUNICATIONS.
3. ALL WIRE THIS SHEET #16 UNLESS NOTED.

PROGRAMMING FOR DTMF RADIO

REMOTE DTMF CROSSING ACTIVATION (ACTIVATES ENTIRE CROSSING)	
TO ACTIVATE PRESS:	924#
TO DE-ACTIVATE PRESS:	924*
(ACTIVATION WILL TIME OUT AFTER 60 SEC.)	

REMOTE DTMF LIGHTING ACTIVATION (ACTIVATES FLASHING LIGHTS ONLY)	
TO ACTIVATE PRESS:	9241#
TO DE-ACTIVATE PRESS:	9241*
(ACTIVATION WILL TIME OUT AFTER 60 SEC.)	

NEW WORK
CXD1026558 IL2010018
09-15-10 XRL/V.ROGERS/
xorail

CSX TRANSPORTATION
RAIL TRANSPORT GROUP ENGINEERING
COMMUNICATIONS AND SIGNALS

SKILLET FORK RD. 152924Y
(2100E)
RECORDER AND DTMF CONTROLLER CIRCUITS
IUKA, IL M.P. BC-257.32

PMD3RCPML.C05H
REV. 01-08-10

DESIGNED	DIGITIZED	CHECKED	DATE
XRL/VJR	XRL/VJR	XRL	09-15-10

DESIGN DATE	REV. NO.	DRAWING	SHEET NO	FILE	SHEET
09-15-10	1	-----	-----	BC25732	C05

	DEFAULTS AND/OR STYLE	FIELD RECORD
EVENT ANALYZER EXECUTIVE PROGRAM	VERSION 2.7, COMPILED ON NOV. 11, 2003	VERSION ____, COMPILED ON _____ (FIELD TO ENTER)
CSXT USER PROGRAM (IF LOADED)	VERSION 1.01, COMPILED ON 12-01-03 (MM-DD-YY)	VERSION ____, COMPILED ON _____ (FIELD TO ENTER)
SYSTEM SETTINGS		
DATE & TIME (ENABLE DAYLIGHT SAVINGS TIME = Y (YES)	MM-DD-YY 23:01:59	n/a
MILE POST	XYZ-789.01	BC-257.32
SITE NAME	MAIN ST (SR-17,US-1)	SKILLET FORK RD.
DOT NUMBER	123456A	152924Y

NOTE TO INSPECTOR, AT IN SERVICE OF EVENT ANALYZER OR UPDATE OF ITS INTERNAL EXECUTIVE PROGRAM OR ITS CSXT USER PROGRAM, THE VERSION NUMBER AND COMPILE DATES OF EACH PROGRAM MUST BE INSERTED IN THE BLANK FIELDS.

EVENT ANALYZER ETHERNET PORT SETUP	
	IP ADDRESS
ETHERNET DIAGNOSTIC PORT (TOP)	192.168.13.2
ETHERNET REMOTE PORT (BOTTOM)	192.168.13.1

BATTERY INPUTS	DC 01	DC 02	DC 03	DC 04
CHANNEL	1	2	3	4
BATTERY CHANNEL NAMES	X-B BULB BATTERY	OB ELECTRONIC BATTERY	B-G GATE BATTERY	SPARE
BATTERY CHANNEL I.D.	X-B	OB	B-G	SP
SAMPLE PERIOD	500 ms	500 ms	500 ms	10,000 ms
RESOLUTION	00.2 V	00.2 V	01.0 V	02.0 V

MODULE-DIGITAL 4 QUAD CURRENT SENSOR SERIAL NUMBER: [_____] (BLANK UNTIL AIS RECEIVED)				
RESOLUTION (AMPS RMS) : [00.2] ARMS				
AUTOMATICALLY ALLOCATED DIGITAL INPUT	DI 17	DI 18	DI 19	DI 20
DIGITAL 4 QUAD CURRENT SENSOR	1	2	3	4
NAME	E1C	E2A	E1A	E2C
ID	E1C	E2A	E1A	E2C
LIT BULB COUNT ON EACH CIRCUIT	4	4	4	4
CURRENT READING IN AMPS AT APPROXIMATE 10.0 VOLTS BULB VOLTAGE	4.0	4.0	4.0	4.0

DIGITAL INPUTS	DI 01	DI 02	DI 03	DI 04	DI 05
CHANNEL	1	2	3	4	5
NAME		ISLAND TRACK 1		MAINTENANCE PB	
ID	SP	ISL	SP	MPB	SP
ON NAME		ISL 1 UP		MAINTENANCE PB HI	
OFF NAME		ISL 1 DN		MAINTENANCE PB LOW	
ON DEBOUNCE TIME	1000 ms	100 ms	1000 ms	100 ms	1000 ms
OFF DEBOUNCE TIME	1000 ms	100 ms	1000 ms	100 ms	1000 ms
TOGGLE PERIOD	500 ms	500 ms	500 ms	500 ms	500 ms

CHANNEL	1	2	3	4
NAME	RELAY OUTPUT 01	RELAY OUTPUT 02	RELAY OUTPUT 03	RELAY OUTPUT 04
I.D.	RLY01	RLY02	RLY03	RLY04
ON NAME	ON	ON	ON	ON
OFF NAME	OFF	OFF	OFF	OFF
PULSE DURATION	1000 ms	1000 ms	1000 ms	1000 ms

DIGITAL INPUTS	DI 06	DI 07	DI 08	DI 09	DI 10
CHANNEL	6	7	8	9	10
NAME	A BELL	STANDBY 1			
ID	A BELL	STBY 1	SP	SP	SP
ON NAME	A BELL RINGING	STANDBY UNIT			
OFF NAME	A BELL NOT RINGING	PRIMARY UNIT			
ON DEBOUNCE TIME	100 ms	100 ms	1000 ms	1000 ms	1000 ms
OFF DEBOUNCE TIME	100 ms	100 ms	1000 ms	1000 ms	1000 ms
TOGGLE PERIOD	500 ms	500 ms	500 ms	500 ms	500 ms

PORT	USER	AUX 1	MODEM/AUX 2
BAUD RATE	38400	9600	9600
PARITY	N	N	N
DATA BITS	8	8	8
STOP BITS	1	1	1
FLOW CONTROL	NONE	NONE	NONE

DIGITAL INPUTS	DI 11	DI 12	DI 13	DI 14	DI 15	DI 16
CHANNEL	11	12	13	14	15	16
NAME		DTMF/TEST	GATE VERTICAL	GATE HORIZONTAL	XR	AC POWER OFF
ID	SP	DTMF	GP	GDP	XR	POR
ON NAME		DTMF TEST ON	GATE VERTICAL	GATE HORIZONTAL	XR UP	AC POWER ON
OFF NAME		DTMF TEST OFF	GATE NOT VERTICAL	GATE NOT HORIZONTAL	XR DN	AC POWER OFF
ON DEBOUNCE TIME	1000 ms	100 ms	100 ms	100 ms	100 ms	100 ms
OFF DEBOUNCE TIME	1000 ms	100 ms	100 ms	100 ms	100 ms	100 ms
TOGGLE PERIOD	500 ms	500 ms	500 ms	500 ms	500 ms	500 ms

= NOTE

NEW WORK
CXD1026558 IL2010018
09-15-10 XRL/V.ROGERS/
xorail

CSX TRANSPORTATION
RAIL TRANSPORT GROUP ENGINEERING
COMMUNICATIONS AND SIGNALS

SKILLET FORK RD. 152924Y
(2100E)
RECORDER PROGRAM
IUKA, IL M.P. BC-257.32

PMD3RCPML.C06
REV. 01-08-10

DESIGNED	DIGITIZED	CHECKED	DATE
XRL/VJR	XRL/VJR	XRL	09-15-10

DESIGN DATE	REV. NO.	DRAWING	SHEET NO	FILE	SHEET
09-15-10	1	-----	-----	BC25732	C06