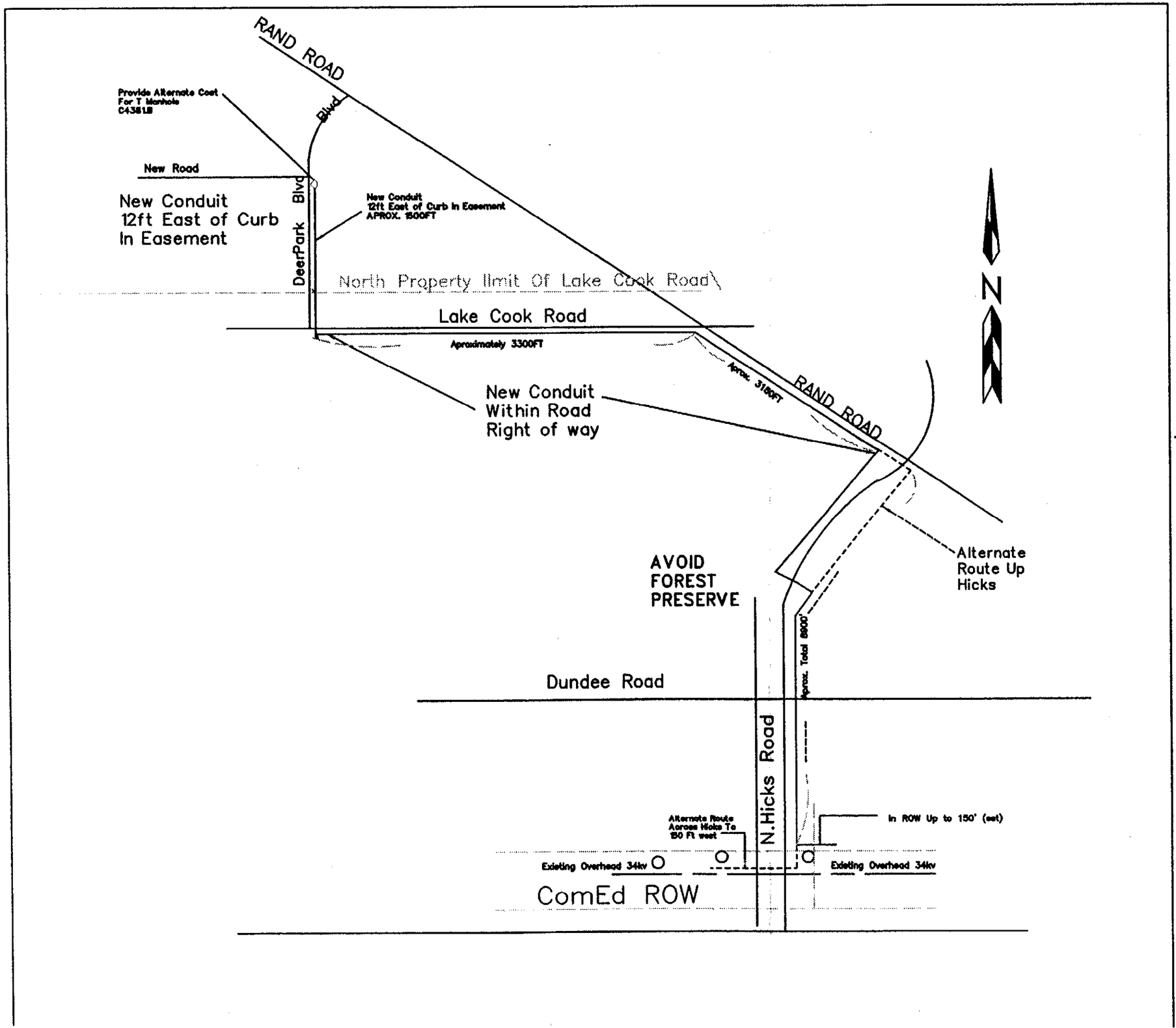


**New Conduit Within Road Right of way**

CABLE SIZE
1/C 750 EXCCJ CU=2.21 Inches
(3 Cables Required)
3–1/C 500 EXCCJ CU= 4.36 Inches

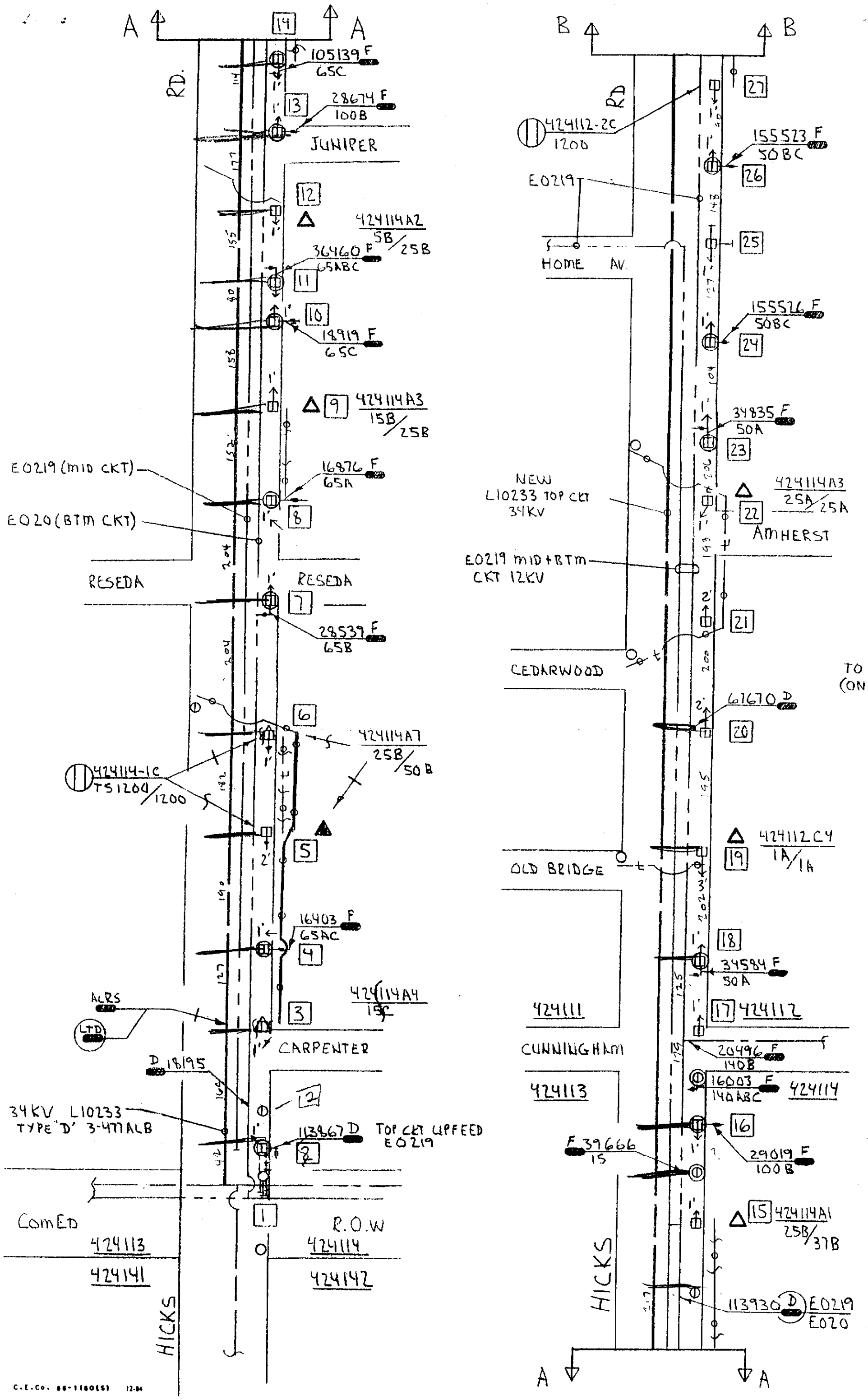
A
A
B
B
RD.
RD
105139 F
65C
28674 F
100B
JUNIPER
424112-2C
120D
155523 F
50BC
E0219
HOME AV.
424114A2
5B/25B
36460 F
65ABC
155526 F
50BC
18919 F
65C
424114A3
15B/25B
34835 F
50A
E0219 (MID CKT)
16876 F
65A
E020 (BTM CKT)
NEW
L10233 TOP CKT
34KV
424114A3
25A/25A
AMHERST
RESEDA
RESEDA
E0219 MID+BTM
CKT 12KV
28539 F
65B
CEDARWOOD
TO
(ON
67670 D
424114A7
25B/50B
424114-1C
TS1200/1200
424112C4
1A/1A
OLD BRIDGE
16403 F
65AC
34584 F
50A
424114A4
15C
424111
ALRS
LTD
CARPENTER
CUNNINGHAM
20496 F
140B
D 18195
424113
16003 F
140ABC
424114
34KV L10233
TYPE 'D' 3-477ALB
113867 D
TOP CKT UPFEED
E0219
F 39666
15
29019 F
100B
424114A1
25B/37B
ComED
R.O.W
424113
424114
424141
424142
HICKS
HICKS
113930 D
E0219
E020
C.E.Co. 86-1160(S) 12-84

| UNDERGROUND UTILITIES | YES | NO | INFORMATION OBTAINED BY | DATE |
|---|---|---|---|---|
| C E CO | X | | RNP | 3-01 |
| GAS | | | | |
| TEL | | | | |
| WATER | | | | |
| SEWER | | | | |

FOR JOINT WORK — C E NO TO CALL | FOR LOCATING UG | FOR CONST.

PREPARED BY: RICH PARKER EXT. CRY-5217
AUTHORIZED BY: DATE:
MAPPED BY: DATE:
REF NO.: ZP011402
AGR: —
SHEET 1 OF 4
TOWN OR TOWNSHIP: PALATINE
BUDGET NO: —
AGR: —
RELATED ORDERS: 065073
NOTES ARE ON SHEET # 2 3 & 4

LOCATION — REASON FOR WORK: CE POW ATT HICKS RD EXTEND
U1023 TO RT 12

ORDER NUMBER: 063934
DATE REQUIRED: MO 05 DAY 11 YEAR 01
ENG DATE: MO 03 YEAR 01 JOB CODE: 3010
MAP (OS OR BLOCK): 424114

VOLTAGE: [S] EC [4] KV; [T] SM [12] KV; [C] ONV 4/12 KV [24] KV
LOC CODE: 41CID
WORK: [L] IVE [D] EAD
STATUS: [I] NTERRUPTION; [S] WITCH/PARALLEL; [P] ORTABLE; [N] OT APPLICABLE
ACCESS: [A] CCESSIBLE; [P] ARTLY ACCES; [N] OT ACCES
CREW SIZE
TRUCK CLASS
TOTAL EST MANHRS
A
B
C
D
COMPLETED BY
DATE COMPLETED

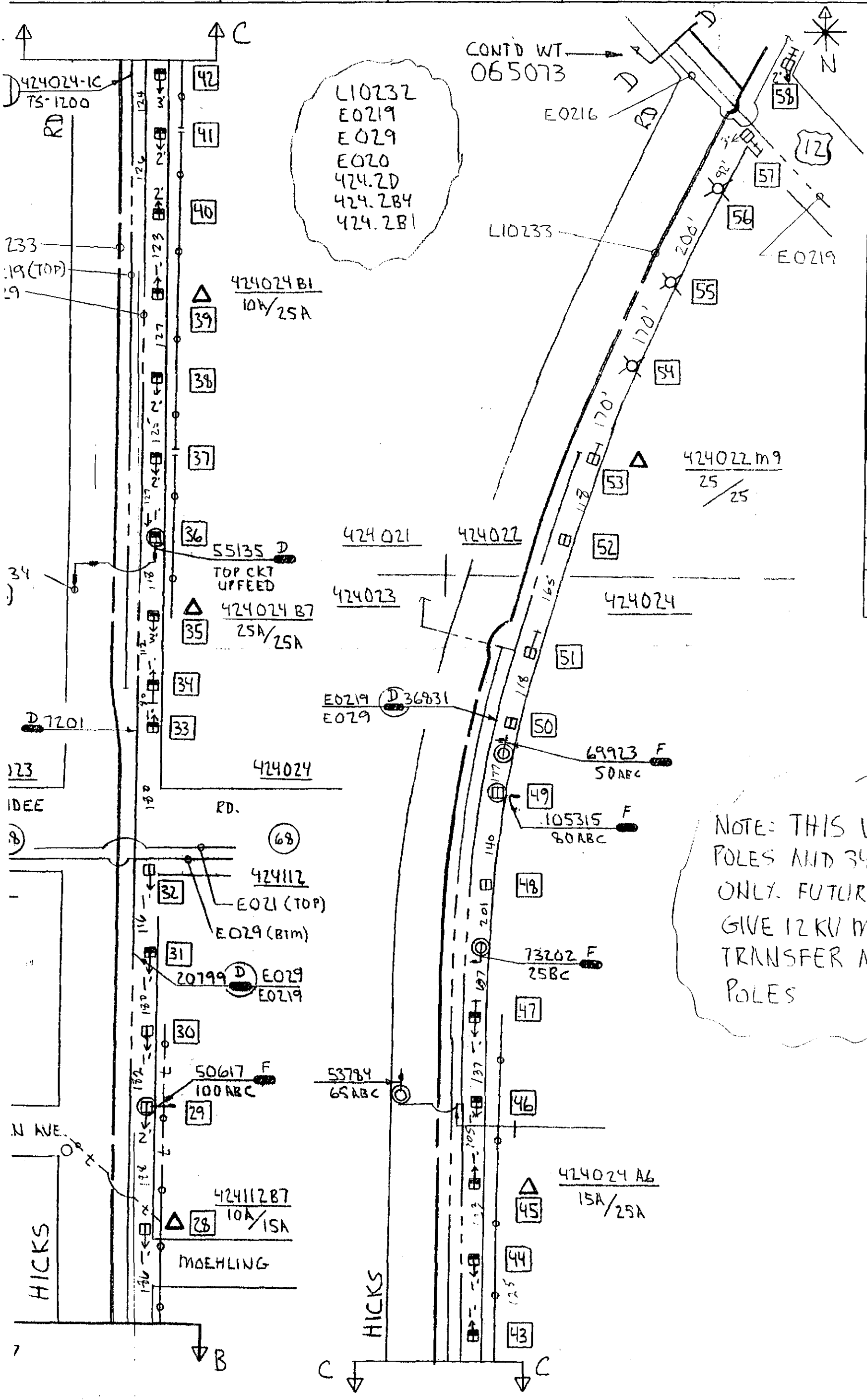


NOTE: THIS WT ISSUES POLES AND 34 KV MATERIAL ONLY. FUTURE WT WILL GIVE 12 KV MATERIAL, TRANSFER AND REMOVE POLES

| UNDERGROUND UTILITIES | YES | NO | INFORMATION OBTAINED BY | DATE |
|---|---|---|---|---|
| ComEd | | | | |
| GAS | | | | |
| TEL | | | | |
| WATER | | | | |
| SEWER | | | | |

FOR JOINT WORK — ComEd NO. TO CALL | FOR LOCATING UG | FOR CONST.

PREPARED BY: LEN BERNDT EXT 2094

AUTHORIZED BY | DATE

MAPPED BY | DATE | REF NO | AGR

TOWN OR TOWNSHIP | BUDGET NO. | AGR | RELATED ORDERS

LOCATION — REASON FOR WORK: LAKE COOK & RAND MOTOROLA

SHEET 1 OF 5

NOTES ARE ON SHEET # 3 & 4

ORDER 065

DATE R MO

ENG. DA MO Y

MAP (QS

VO

S EC

T SM

C ONV 4/12

L IVE

STATUS

I NTERRUPTION

S WITCH/PARALLEL

P ORTABLE

N OT APPLICABLE

ACCESS

A CCESSIBLE

P ARTLY ACCES.

N OT ACCES.

CREW SIZE

TRUCK CLASS

TOTAL EST. MANHRS.

A

B

C

D

COMPLETED BY

DATE COMPLETED

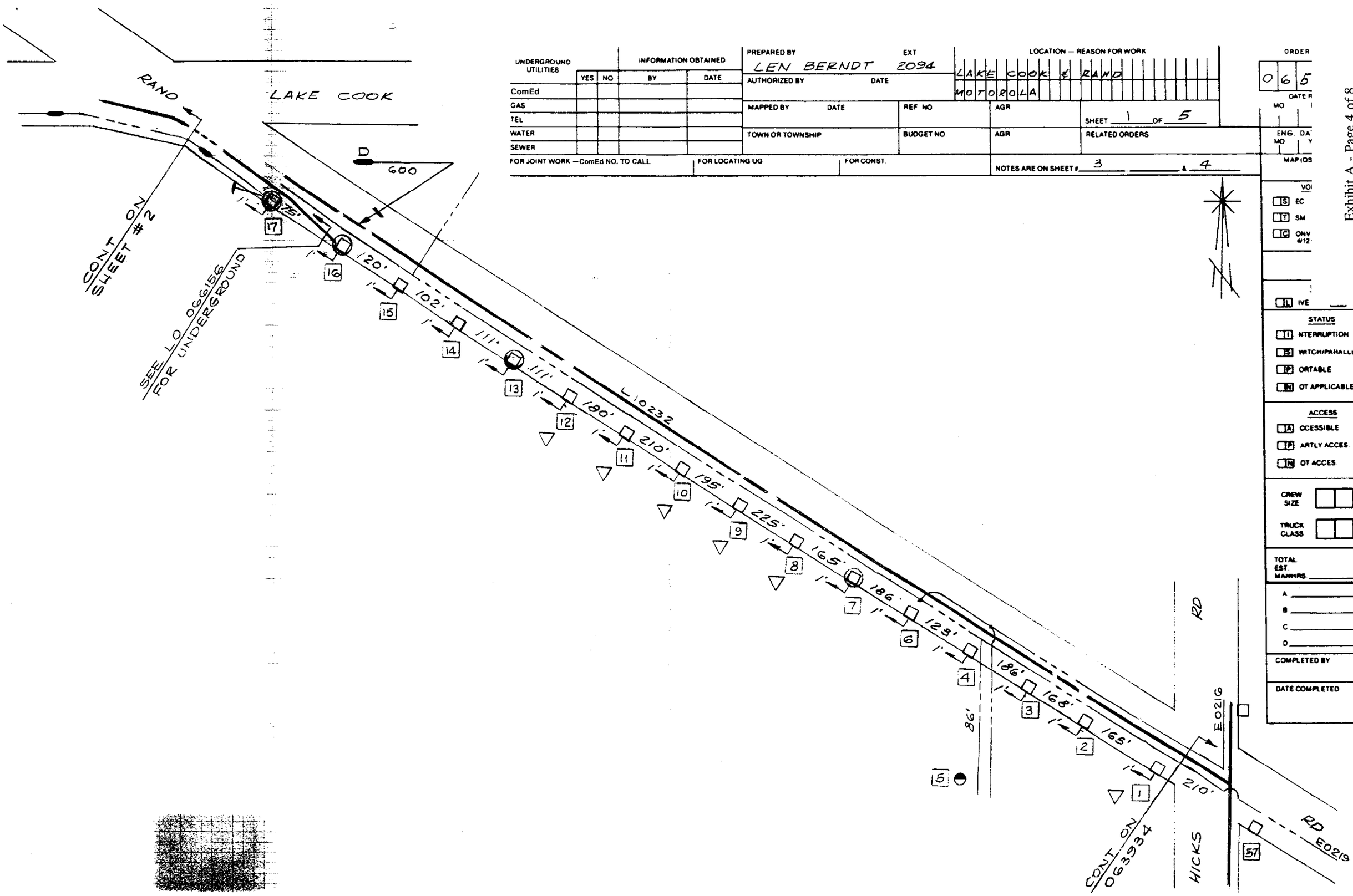


Exhibit A - Page 4 of 8

| UNDERGROUND UTILITIES | YES | NO | INFORMATION OBTAINED BY | DATE |
|---|---|---|---|---|
| ComEd | | | | |
| GAS | | | | |
| TEL | | | | |
| WATER | | | | |
| SEWER | | | | |

FOR JOINT WORK – ComEd NO. TO CALL | FOR LOCATING UG | FOR CONST

PREPARED BY: LEN BERNDT EXT 2094

AUTHORIZED BY | DATE

MAPPED BY | DATE

REF NO: 2P011402

TOWN OR TOWNSHIP: PALATINE

BUDGET NO

LOCATION – REASON FOR WORK: MOTOROLA & RAND / LAKE COOK & RAND RD

AGR

AGR: —

SHEET 1 OF 2

RELATED ORDERS: 066073

NOTES ARE ON SHEET # _____ & _____

ORDER: 066

DATE R: MO 04

ENG. DAT: MO 03

MAP IDS: 421C

VO

[S] EC

[T] SM

[C] ONV 4/12

W

[L] IVE [D] EAD

STATUS

[I] NTERRUPTION

[S] WITCH/PARALLEL

[P] ORTABLE

[N] OT APPLICABLE

ACCESS

[A] CCESSIBLE

[P] ARTLY ACCES

[N] OT ACCES

CREW SIZE

TRUCK CLASS

TOTAL EST MANHRS.

A

B

C

D

COMPLETED BY

DATE COMPLETED

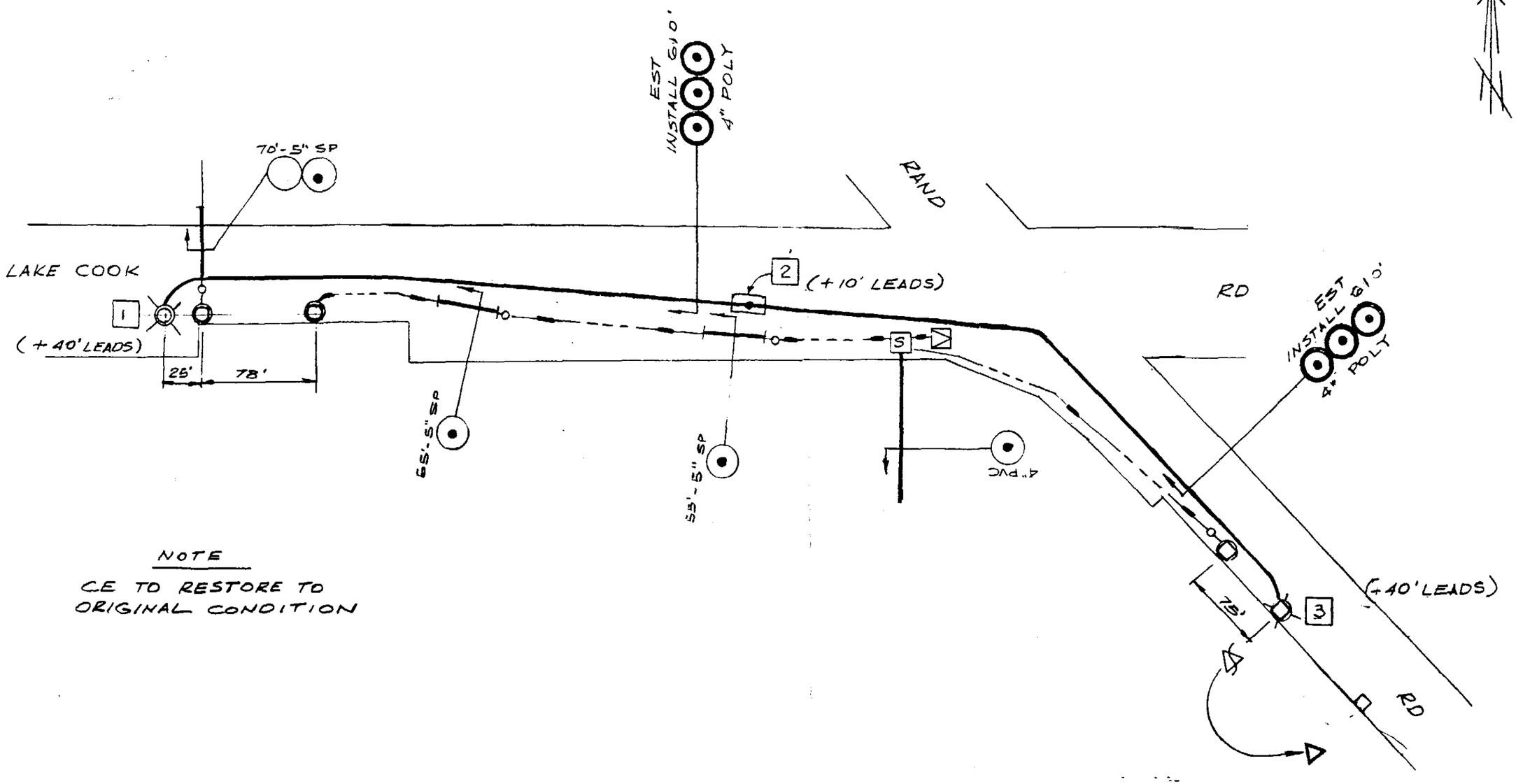


NOTE

CE TO RESTORE TO ORIGINAL CONDITION

| UNDERGROUND UTILITIES | YES | NO | INFORMATION OBTAINED BY | DATE |
|---|---|---|---|---|
| ComEd | | | | |
| GAS | | | | |
| TEL | | | | |
| WATER | | | | |
| SEWER | | | | |

FOR JOINT WORK — ComEd NO. TO CALL | FOR LOCATING UG | FOR CONST

PREPARED BY: LEN BERNDT EXT 2090

AUTHORIZED BY | DATE

MAPPED BY | DATE | REF NO | AGR

TOWN OR TOWNSHIP | BUDGET NO | AGR

LOCATION — REASON FOR WORK: LAKE COOK & RAND RD MOTOROLA

SHEET 2 OF 5

RELATED ORDERS

NOTES ARE ON SHEET # 4 & 5

ORDER NUMBER: 06607

DATE REQUIRED: MO DAY YE

ENG DATE MO YEAR JOB

MAP (QS OR BLOCK)

VOLTAGE: S EC, T SM, C ONV 4/12 KV, 4, 12, 34

LOC

WORK: L IVE, D EAD

STATUS: I NTERRUPTION, S WITCH/PARALLEL, P ORTABLE, N OT APPLICABLE

ACCESS: A CCESSIBLE, P ARTLY ACCES, N OT ACCES

CREW SIZE

TRUCK CLASS

TOTAL EST MANHRS

A

B

C

D

COMPLETED BY

DATE COMPLETED

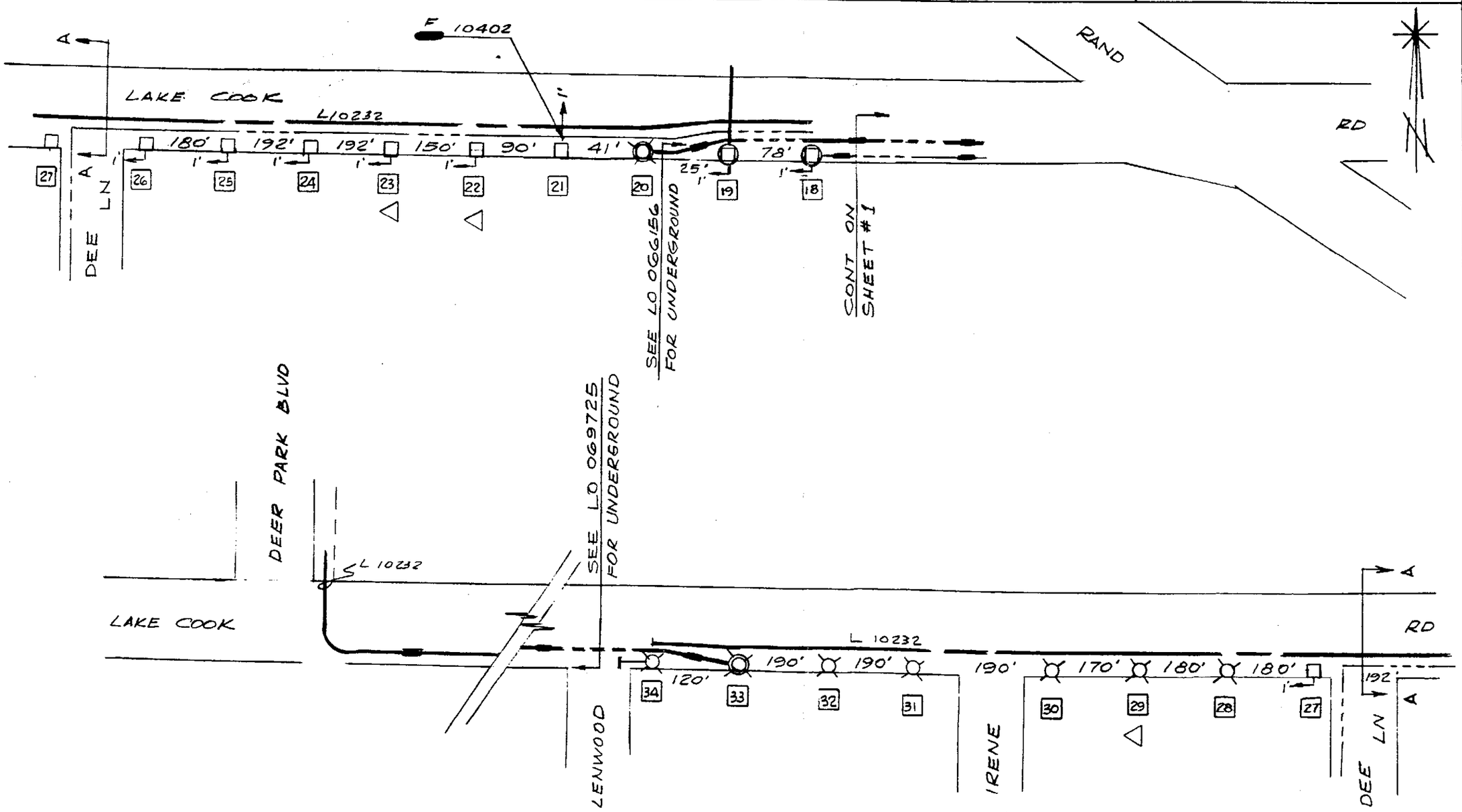

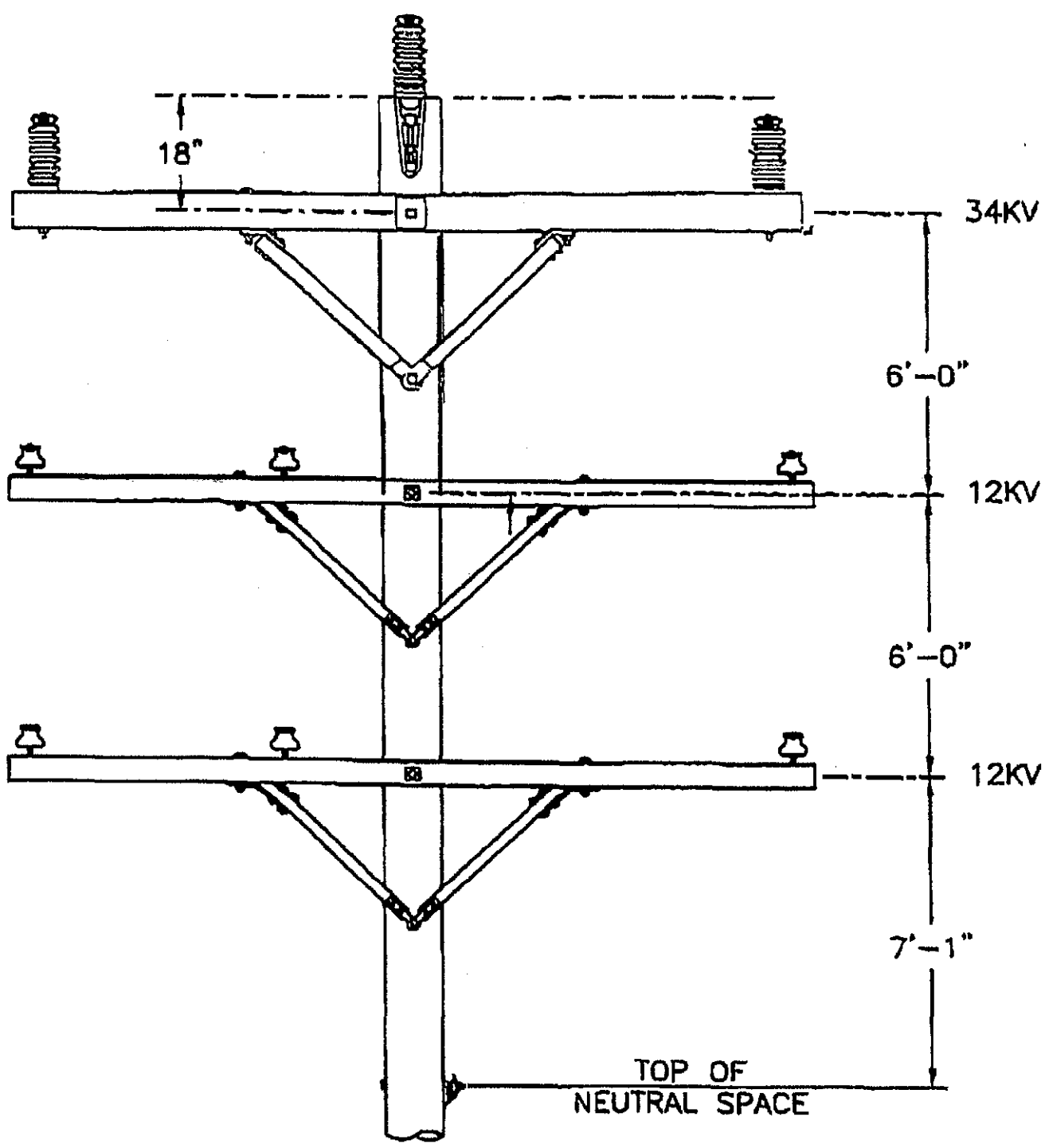


ACAD

© Notice: The information contained on this page is the sole property of ComEd and is to be used only in conjunction with electric service provided by ComEd.

ComEd SYSTEM STANDARD

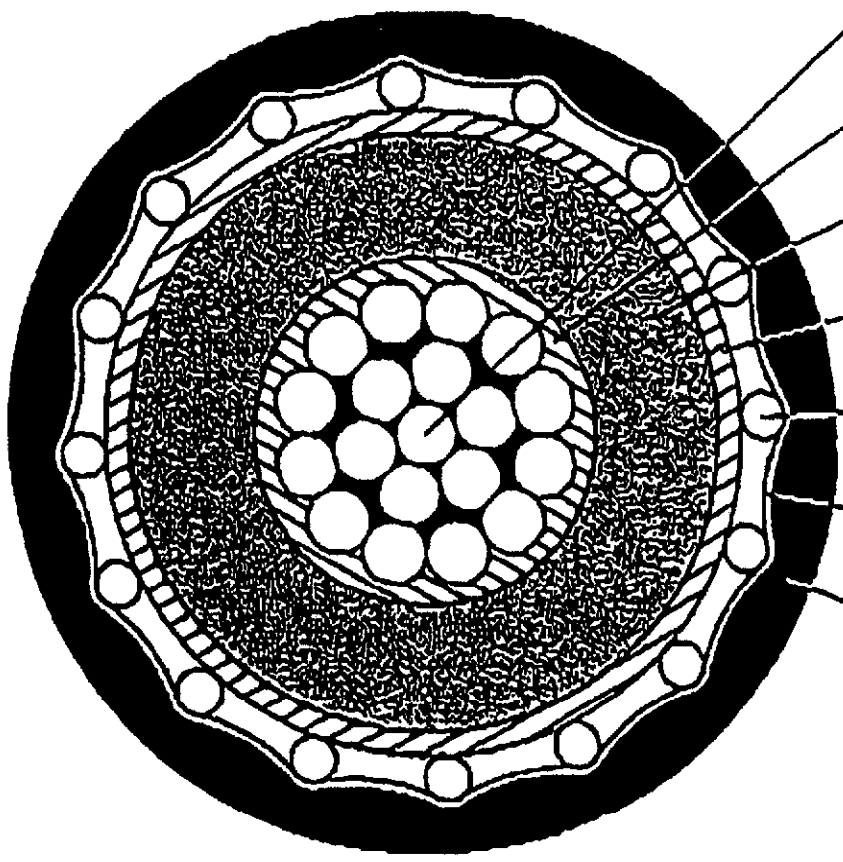
CONDUCTOR W/
STRAND FILL COMPOUND
CONDUCTOR SHIELD
INSULATION
INSULATION SHIELD
CONCENTRIC NEUTRAL WIRE
LONGITUDINAL
WATER BLOCK LAYER
JACKET

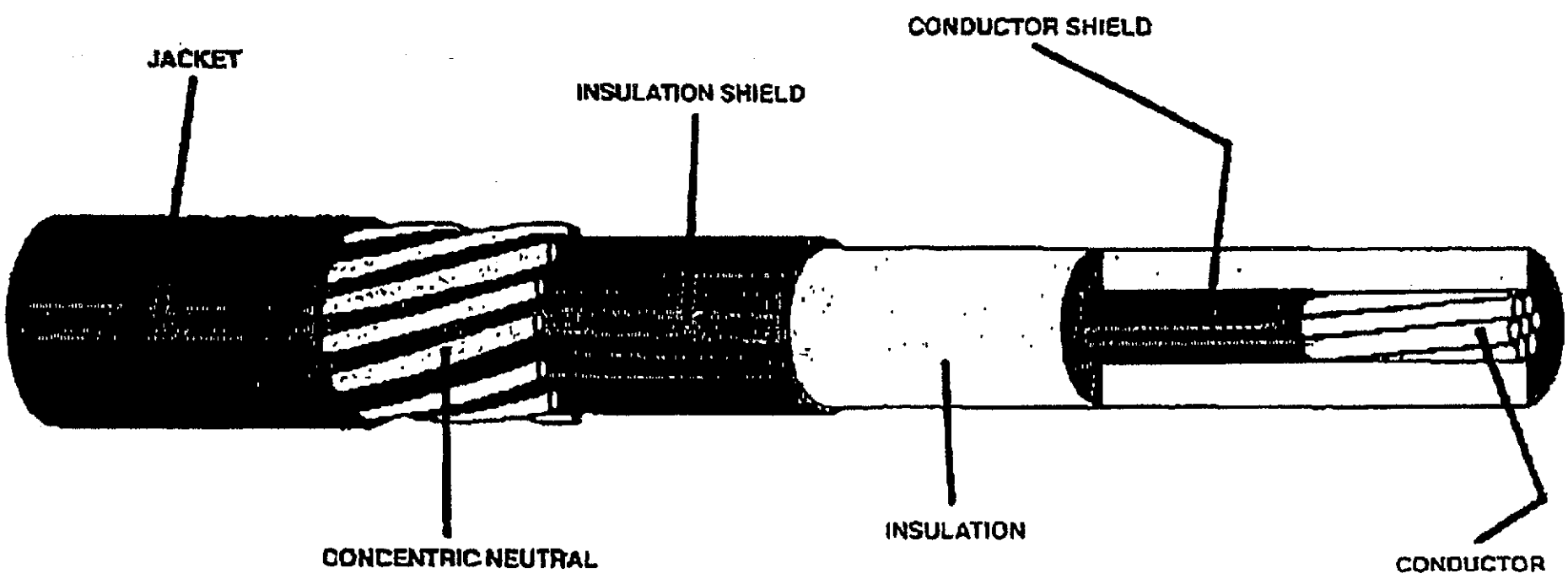
JACKET
INSULATION SHIELD
CONDUCTOR SHIELD
CONCENTRIC NEUTRAL
INSULATION
CONDUCTOR