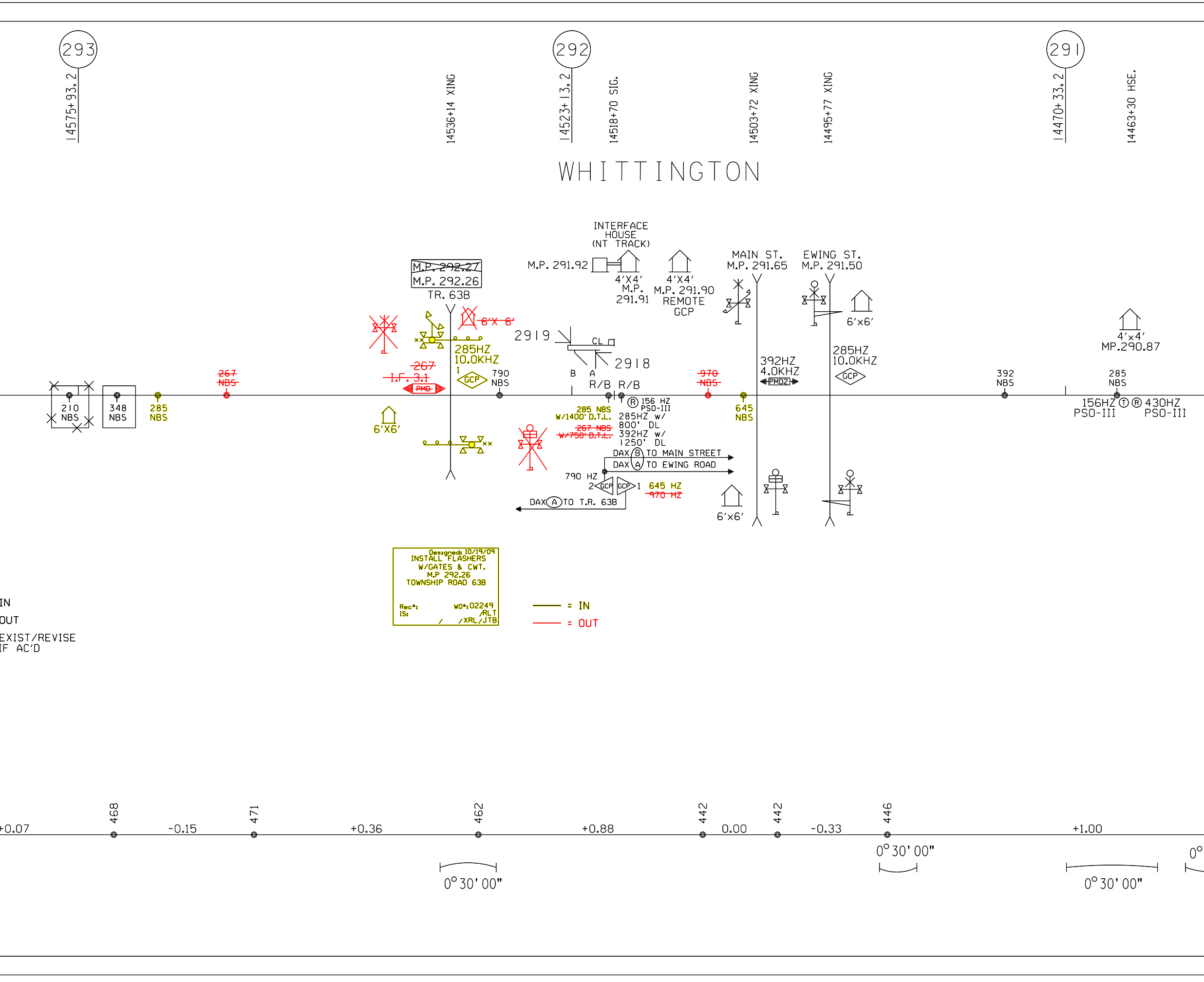

293
292
291
14575+93.2
14536+14 XING
14523+13.2
14518+70 SIG.
14503+72 XING
14495+77 XING
14470+33.2
14463+30 HSE.
WHITTINGTON
INTERFACE HOUSE (NT TRACK)
M.P. 291.92
4'X4' M.P. 291.91
4'X4' M.P. 291.90 REMOTE GCP
MAIN ST. M.P. 291.65
EWING ST. M.P. 291.50
M.P. 292.27
M.P. 292.26
TR. 63B
6'X 6'
6'x6'
4'x4' MP.290.87
2919
2918
CL
285HZ 10.0KHZ
267 I.F. 3.1
PMD
GCP
790 NBS
B A
R/B R/B
970 NBS
392HZ 4.0KHZ
PMD2
285HZ 10.0KHZ
392 NBS
285 NBS
210 NBS
348 NBS
285 NBS
6'X6'
285 NBS W/1400' D.T.L.
267 NBS W/750' D.T.L.
156 HZ PSO-III
285HZ w/ 800' DL
392HZ w/ 1250' DL
645 NBS
156HZ PSO-III
430HZ PSO-III
DAX B TO MAIN STREET
DAX A TO EWING ROAD
790 HZ
645 HZ
970 HZ
DAX A TO T.R. 63B
6'x6'
Designed: 10/19/09
INSTALL FLASHERS
W/GATES & CWT.
M.P 292.26
TOWNSHIP ROAD 63B
Rec#: WO#:02249
IS: /RLT
/ /XRL/JTB
= IN
= OUT
IN
OUT
EXIST/REVISE
IF AC'D
468
471
462
442
442
446
+0.07
-0.15
+0.36
+0.88
0.00
-0.33
+1.00
0° 30' 00"
0° 30' 00"
0° 30' 00"
0°

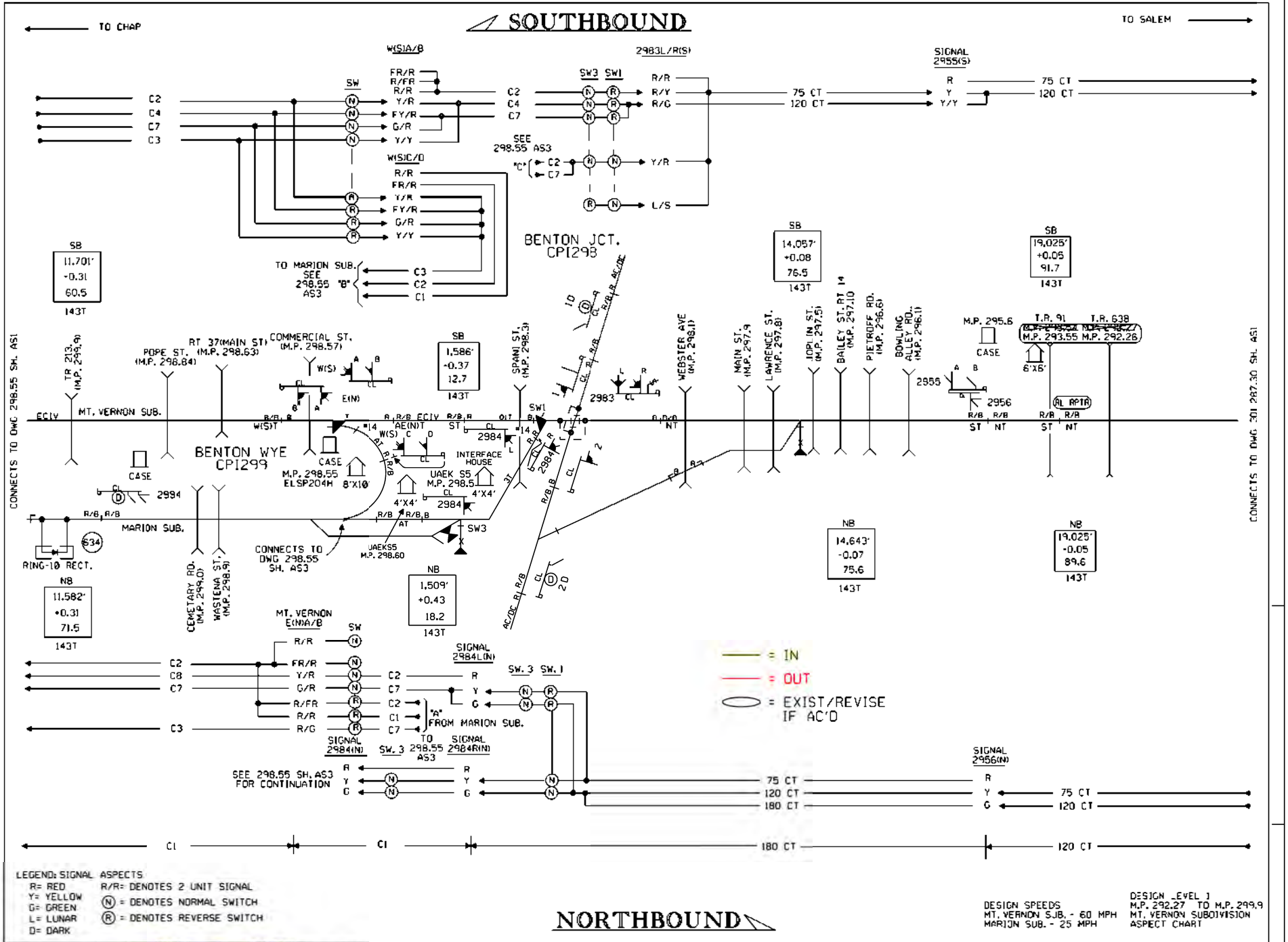
SOUTHBOUND
TO CHAP
TO SALEM
W(S)A/B
2983L/R(S)
SIGNAL 2955(S)
SW
SW3 SW1
SEE 298.55 AS3
W(S)C/D
TO MARION SUB. SEE 298.55 "B" AS3
BENTON JCT. CPI298
SB 11.701' -0.31 60.5 143T
SB 14.057' +0.08 76.5 143T
SB 19.025' +0.05 91.7 143T
SB 1,586' -0.37 12.7 143T
NB 11.582' +0.31 71.5 143T
NB 1,509' +0.43 18.2 143T
NB 14.643' -0.07 75.6 143T
NB 19.025' -0.05 89.6 143T
CONNECTS TO DWG 298.55 SH. AS1
CONNECTS TO DWG 301 287.30 SH. AS1
TR 213 (M.P. 299.9)
POPE ST. (M.P. 298.84)
RT 37(MAIN ST) (M.P. 298.63)
COMMERCIAL ST. (M.P. 298.57)
SPANI ST. (M.P. 298.3)
WEBSTER AVE (M.P. 298.1)
MAIN ST. (M.P. 297.9)
LAWRENCE ST. (M.P. 297.8)
JOPLIN ST. (M.P. 297.5)
BAILEY ST. RT 14 (M.P. 297.10)
PIETROFF RD. (M.P. 296.6)
BOWLING ALLEY RD. (M.P. 296.1)
M.P. 295.6
T.R. 91 M.P. 293.55
T.R. 638 M.P. 292.26
MT. VERNON SUB.
BENTON WYE CPI299
CASE
M.P. 298.55 ELSP204H 8'X10'
INTERFACE HOUSE
UAEK S5 M.P. 298.5
UAEKS5 M.P. 298.60
MARION SUB.
RING-10 RECT.
CEMETARY RD. (M.P. 299.0)
WASIENA ST. (M.P. 298.9)
CONNECTS TO DWG 298.55 SH. AS3
MT. VERNON E(N)A/B
SIGNAL 2984L(N)
SW. 3 SW. 1
"A" FROM MARION SUB.
TO SW. 3 298.55 AS3
SIGNAL 2984(N)
SIGNAL 2984R(N)
SIGNAL 2956(N)
SEE 298.55 SH. AS3 FOR CONTINUATION
= IN
= OUT
= EXIST/REVISE IF AC'D
NORTHBOUND
LEGEND: SIGNAL ASPECTS
R= RED
Y= YELLOW
G= GREEN
L= LUNAR
D= DARK
R/R= DENOTES 2 UNIT SIGNAL
(N) = DENOTES NORMAL SWITCH
(R) = DENOTES REVERSE SWITCH
DESIGN SPEEDS
MT. VERNON SJB. - 60 MPH
MARION SUB. - 25 MPH
DESIGN LEVEL 1
M.P. 292.27 TO M.P. 299.9
MT. VERNON SUBDIVISION
ASPECT CHART
UNION PACIFIC RAILROAD
SALEM, ILLINOIS
TO CHAP, ILLINOIS
C.T.C. CIRCUITS
SIGNAL DESIGN
DATE 6-12-00
SHEET AS2
DWG 298.55
S-1277

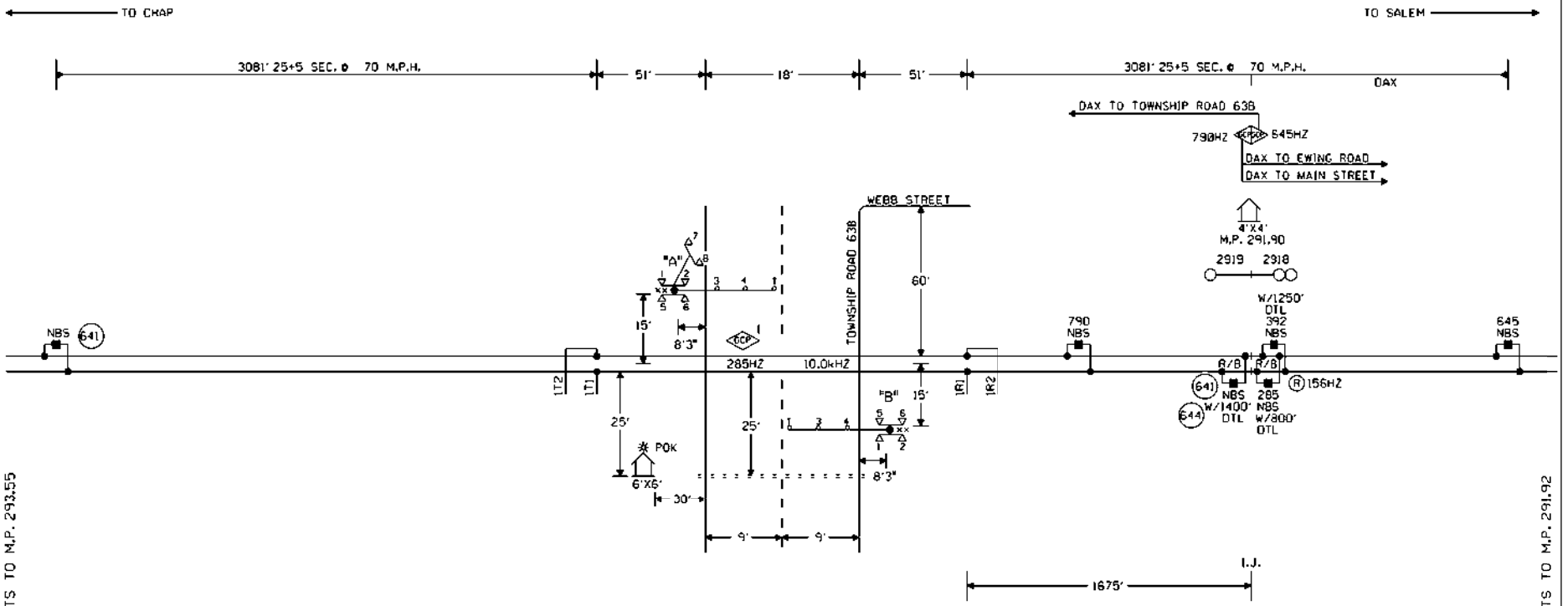

NOTES:

⊗ = TWISTED WIRES
INSULATED 1 TWIST PER FT.
ALL TRACK WIRES 2C. #6

TRANSMITTER AND RECEIVER LEADS TO BE SEPARATED BY AT LEAST 12" IN TRENCH, LENGTHS SHOULD NOT EXCEED MANUFACTURES RECOMMENDATION.

TOP OF FOUNDATION TO BE AT SAME ELEVATION AS THE SURFACE OF THE TRAVELED WAY & NO MORE THAN 4" ABOVE THE SURFACE OF THE GROUND.

ALL BUNGALOW WIRING TO BE #16 AWG FLEX UNLESS OTHERWISE SPECIFIED EXCEPT ALL GROUND WIRE TO BE #6 AWG FLEX OR LARGER.

ALL WIRING IN GATE MECHANISM TO BE #10 "AWG FLEX".

REFER TO UP STANDARD DWG FOR BUNGALOW GROUNDING.

PORTABLE GENERATOR EXTENSION CORD FOR 240V TO 240V IS PROVIDED AS WELL AS A 120V TO 240V ADAPTER.

ALL LIGHTS TO BE 12" ROUNDELS.

= = = = = = 4" X 40' CONDUIT

LIGHTS: LED LIGHTS

GATE A: 17'
GATE B: 17'

xx = BELL

CONSTRUCTION NOTES:

1. ORDER AND INSTALL (2) 133" INSULATED JOINTS AT M.P. 291.90. RETIRE EXISTING INSULATED JOINTS.

2. WIRE FOR BUT FIELD TO SUPPLY CRTU EQUIPMENT.

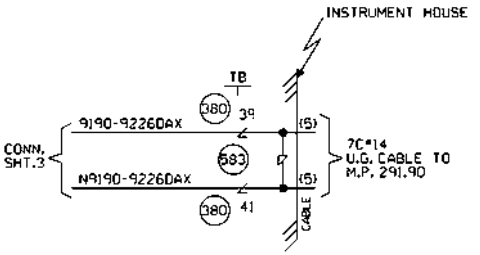

W(S) ← → E(N)

CABLE TABULATION

CABLE #5 7C#14 U.G.B.T. HOUSE TO MP. 291.90

NEW SHEET

					Designed 10/19/09 INSTALL FLASHERS W/GATES & CWT. M.P. 292.26 TOWNSHIP ROAD 63B	MODIFICATION LEVEL		UNION PACIFIC SAFETY SIGNAL DESIGN	Date: 10/19/09
					Rev'd 15: WO#:02249 RLT /XRL/JTB	Q. A. LAST LEVEL CHECKED	DS		Des: XRL
						LAST LEVEL MOD THIS TYPICAL	DS		Chk: RLT
						LAST LEVEL BY DESIGNER	DS		AFE: 02249
						CHANGED FROM TYPICAL?	Y		
						4K 1TKBG.1			

UNION PACIFIC RAILROAD
WHITTINGTON, ILLINOIS
TOWNSHIP ROAD 63B
MT. VERNON SUBDIVISION
Office of Sr. AVP Engineering - Signal/TCD Omaha, Nebraska

Sht: 1
DOT: 167612K
MP: 292.26
ID: 030129226.1X

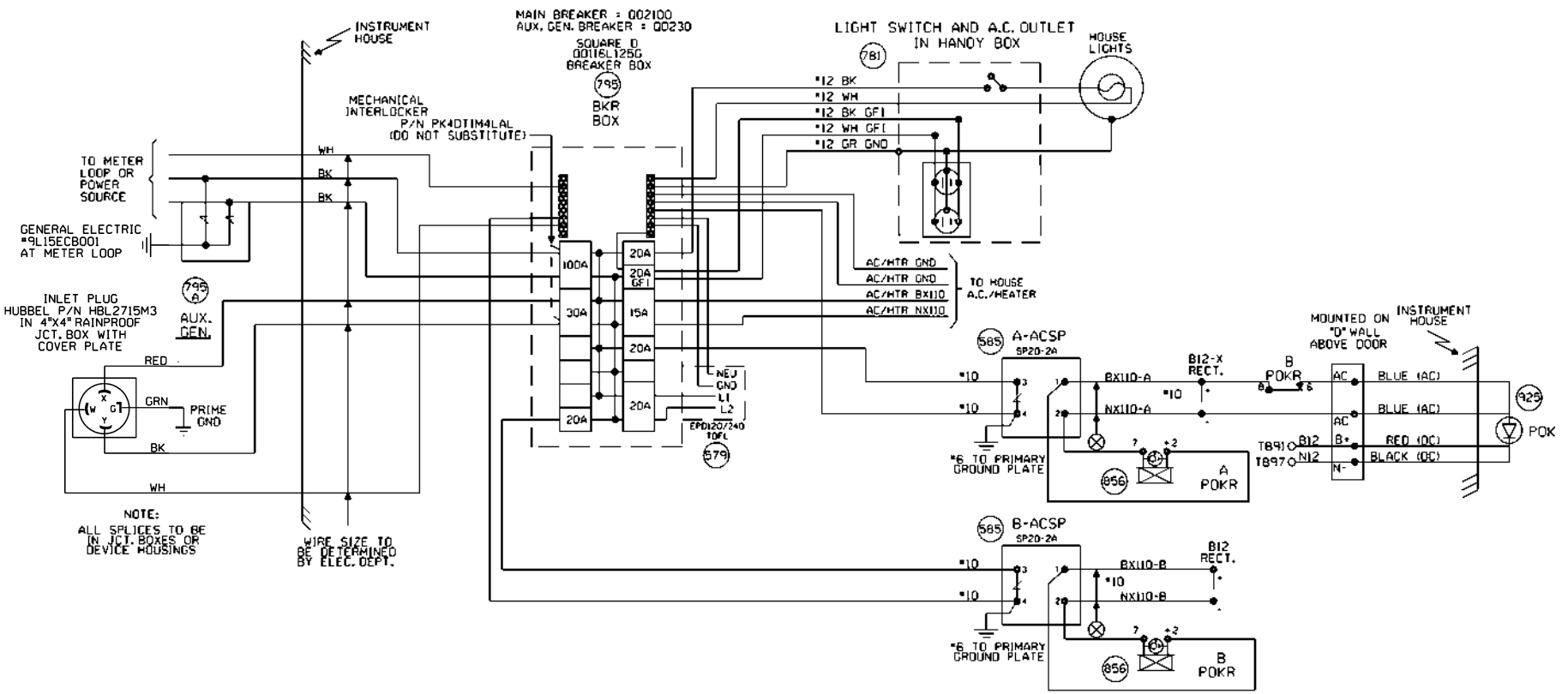

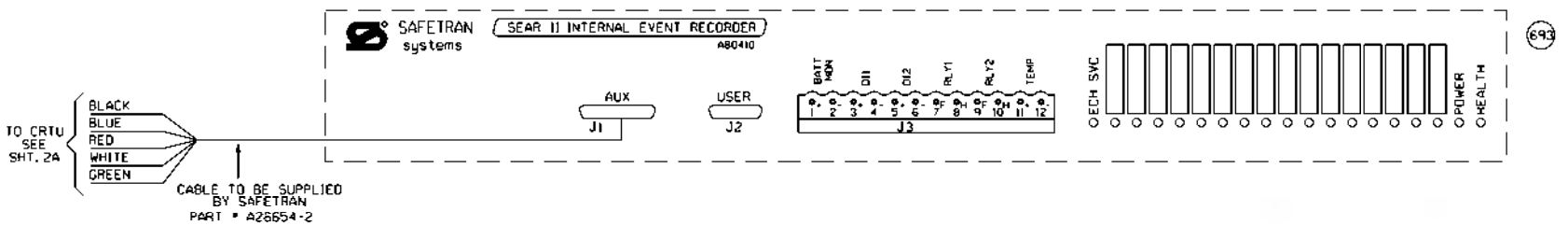

NEW SHEET

					Designed 10/19/09 INSTALL FLASHERS W/GATES & CWT. MLP 292.26 TOWNSHIP ROAD 63B	MODIFICATION LEVEL		UNION PACIFIC	Date: 10/19/09	UNION PACIFIC RAILROAD	Sht: 2
					Rec'd: W04D2249	Q.A. LAST LEVEL CHECKED	DS	QUALITY PROJECT SAFETY	Dest: XRL	WHITTINGTON, ILLINOIS	DOT 167612K
					Rev: RLT	LAST LEVEL MOD THIS TYPICAL	DS	SAFETY SIGNAL DESIGN	Chk: RLT	TOWNSHIP ROAD 63B	MP: 292.26
					/XRL/JTB	LAST LEVEL BY DESIGNER	DS		AFE: 02249	MT. VERNON SUBDIVISION	ID: 030129226.2K
						CHANGED FROM TYPICAL?	N			Office of Sr. AVP Engineering - Signal/TCO Omaha, Nebraska	
						Rev 09.02.09 4K SEARAC.2					

NOTE: IF ALOD'S ARE USED REMOVE JUMPER FROM POWER SOURCE + TO E0e + AND SHOW ALOD WIRE CONNECTED

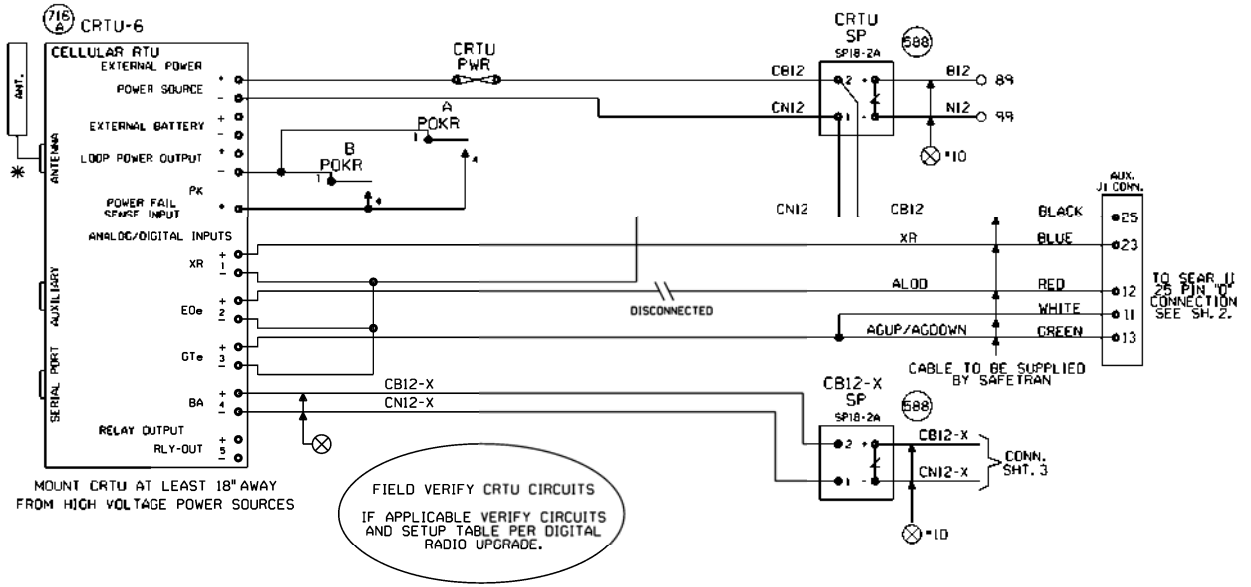

NOTES:

ALL DIODES 1N5060 OR 1N4004 UNLESS OTHERWISE NOTED.

✳ MOUNT ANTENNA ON TOP OF HOUSE.
INSTALL ANTENNA CABLE AND CHOKE PER TECH BULLENTIN #99-0015-00

ALL WIRES #18 UNLESS OTHERWISE NOTED.

ALL UNUSED 'NC' INPUTS MUST BE TIED HIGH TO BATTERY

ALL UNUSED ANALOG INPUTS MUST BE TIED HIGH TO BATTERY

ALL UNUSED 'NO' INPUTS MUST BE DISCONNECTED

NORMAL STATE FOR ANALOG CHANNELS IS EQUAL TO THE STORED NOMINAL VOLTAGE +120% OR -81%

CRTU FRONT PANEL DISPLAY CHART INDICATES NORMAL STATE

■ DIGITAL INPUT HIGH, OR POWER FAIL INPUT CLOSED ☐ DIGITAL INPUT LOW, OR POWER FAIL INPUT OPEN

■ L ◄ LATCH IS SET BECAUSE CRTU DETECTED AN ALARM CONDITION
12.06V L ◄

'sRUN MODE' 'sRUN MODE-SILENT'
CRTU RADIO IS DISABLED. REPROGRAM CRTU WITH LAPTOP.

ANALOG AND AC INPUT MODULES AND SURGE PROTECTORS MUST BE MOUNTED LESS THAN 18" FROM CRTU

ANALOG MODULES CONVERT DC VOLTAGE TO A SQUARE WAVE. A WORKING ANALOG MODULE WILL HAVE 4.5VDC TO 8.0VDC BETWEEN 5VOUT+ AND 6VOUT-. WHERE, 0VOLTS = 0HZ OUT, 30VOLTS = 10KHZ OUT, AND 15VOLTS = 5KHZ OUT

MAKE SURE CRTU IS PROGRAMMED WITH CALIBRATION SETTINGS.

CRTU CH4 CAN BE CONNECTED TO EITHER SP18 OR EQUIPMENT SIDE OF MOSAI, TAB 565

UNIT INSTALLATION AND SETUP

R.R. SITE ID WHERE: SSSS : 4 CHARACTER SUBDIVISION ID. FILL WITH PRECEDING ZEROS AS REQUIRED. THE MAIN TRACK SUBDIVISION ID* IS IN THE CURRENT TIMETABLE. INDUSTRIAL LEADS, LEASED, AND LEAD TRACKS LISTED WITHIN THE SUBDIVISION MAY HAVE THEIR OWN UNIQUE SUBDIVISION ID*. ALWAYS REFER TO CURRENT PRINTED COPY OF THE TIMETABLE.
LLLLLLLL : 8 CHARACTERS USE DOT* AT CROSSINGS, AND
WDLLLLLL : USE 'WD' THEN MP' AT WAYSIDE LOCATIONS.
EXAMPLE : 0785WD1801.5UT
HBLLLLLL : USE 'HB' THEN MP' AT HBD SITES.
EXAMPLE : 0100-HB55.62TX
THE MP' MUST USE A DECIMAL POINT TO SEPARATE NUMBERS.
FILL WITH PRECEDING DASHES AS REQUIRED.
AA = 2 CHARACTER STATE NAME FOR ALL LOCATIONS.
MUST BE 14 CHARACTERS LONG. NO SPACES ALLOWED.

SITE IDENTIFIER: SSSSLLLLLLLLAA	0047-167612KIL
OPERATION TO RESUME:	RUN
SIGNAL STRENGTH dBm	
CARRIER ID	
FIRMWARE VERSION	2.3.
SERIAL NUMBER	
BOOT VERSION:	
CMM VERSION:	
MIN ASSIGNMENT	
ESN: (MICROBURST ONLY):	
CONFIGURATION NET	
SILENCE INTERVAL	60 MINUTES
HEALTHCHECK INTERVAL	EVERY 2 DAYS
ALARM DEFER DELAY	240 MINUTES (4 HOURS)
SIGNAL STATUS	
SCADANET STATUS	
CALIBRATION CONSTANT CH1	
CALIBRATION CONSTANT CH2	
CALIBRATION CONSTANT CH3	
CALIBRATION CONSTANT CH4	
CALIBRATION CONSTANT PS	

FIELD PROVIDES: SAMPLED NOMINAL VOLTAGES, SCADANET STATUS CALIBRATION CONSTANTS, SERIAL NUMBER, AND SIGNAL STATUS.

CHANNEL SETUP - STANDARD CONFIGURATION 32:XR,E0e,GTe,Ba

CHANNEL NORMAL STATE	SENSE (NO/NC)	NAME FUNCTION	RECOGNITION DELAY SECONDS ACTIVE	RECOGNITION DELAY SECONDS NORMAL	RETURN TO NORMAL	REPORTING MODE	ALARM LINKED CHANNEL	ALARM LINKED CRITERIA	EVENT LOGGING ENABLED OPTIONS
POWER FAIL (CH5) ■	POWER FAIL DETECT NO	PFin-PK AC POWER FAIL	7,200 ALARM	300 NORMAL	ENABLED	ALERT	DISABLED	N/A	
									ANALOG VALUE SENT
CH1 ■ ☐	DIGITAL INPUT NC	CH1-XR XR DOWN TO LONG	1,800 ALARM	1 NORMAL	ENABLED	ALERT	DISABLED	N/A	
CH2 ☐ ■	DIGITAL INPUT NO	CH2-E0e LIGHT OUT	120 ALARM	10 NORMAL	ENABLED	ALERT	DISABLED	N/A	
CH3 ☐ ■	DIGITAL INPUT NO	CH3-GTe GATES NOT UP/DOWN	120 ALARM	10 NORMAL	ENABLED	ALERT	DISABLED	N/A	
									DIGITAL EVENTS
CH4 STORED NOMINAL VOLTAGE	ANALOG INPUT N/A	CH4-Ba/Y BATTERY MONITOR BATTERY LOW	600 ALARM	1200 NORMAL	ENABLED	ALERT W/UPDATE	DISABLED	N/A	PFin-PK CH1-XR CH2-E0e CH3-GTe
POWER SOURCE (CH6)	ANALOG INPUT N/A	PS-Ba/Y BATTERY MONITOR BATTERY LOW	600 ALARM	1200 NORMAL	ENABLED	ALERT W/UPDATE	DISABLED	N/A	

ANALOG CHANNEL	USEFUL RANGE VOLTS LOW	USEFUL RANGE VOLTS HIGH	DISPLAYED RANGE VOLTS LOW	DISPLAYED RANGE VOLTS HIGH	RELATIVE ALARM POINT LOW	RELATIVE ALARM POINT HIGH	ABSOLUTE ALARM POINT LOW	ABSOLUTE ALARM POINT HIGH	AUTOMATIC UPDATE INTERVAL	STORED NOMINAL VOLTAGE	SAMPLED NOMINAL VOLTAGE
CH4	0.0	30.00	0.0	30.00	81%	120%	10.0	29.0	14 DAYS	12.69	
POWER SOURCE	0.0	30.00	0.0	30.00	81%	120%	10.0	29.0	14 DAYS	12.69	

RELAY OUTPUT	NAME	ACTIVE	NORMAL	PULSE DURATION	15 SECONDS	
	RLY-OUT	SET-UP-OPEN	CLR-ON-CLOSE			StdCfg Ver: 2.3.3 REV'D 9-20-02

MAINTENANCE OPERATIONS

TO START OR ABORT ANY PROCEDURE
1. PRESS THE 'CANCEL' BUTTON FIRST

WHEN RESPONDING TO A CALL, PUT THE CRTU IN THE 'SILENCE ALARMS' MODE
1. PRESS 'SELECT' AND THEN '+ ARROW' BUTTON UNTIL
DISPLAY: ACTION?
SILENCE ALARMS
2. PRESS THE 'SELECT' BUTTON TWICE.
3. CORRECT PROBLEM AND SIMULATE NORMAL TRAIN MOVEMENT THROUGH THE LOCATION
4. EXAMINE EACH CHANNEL ON THE CRTU
5. PRESS THE '-/+' ARROW' BUTTON
VERIFY ALL CHANNELS INDICATE A NORMAL STATE
NORMAL STATES ARE ON THE CHANNEL SETUP CHART

CLEAR TIMERS, LATCHES AND SEND ALL NORMAL
1. DO STEPS #1 - #5 ABOVE, AND PRESS 'CANCEL'.
2. PRESS 'SELECT' AND THEN '+ ARROW' BUTTON UNTIL
DISPLAY: ACTION?
SERVICE MODE
3. PRESS 'SELECT' AGAIN TO RESET TIMERS, AND IF
DISPLAY: SERVICE MODE
ALL NORMAL
4. PRESS 'SELECT' AGAIN TO CLEAR LATCHES, AND SEND ALL NORMAL, SKIP STEPS #5-#6.
5. HOWEVER, IF ALARMS ARE NOT CLEARED:
DISPLAY: SERVICE MODE
ALARMS PENDING/PRESENT
6. PRESS 'CANCEL', CORRECT PROBLEM AND REPEAT STEPS #2 THRU #5 UNTIL ALL NORMAL SENT.

TO CANCEL THE 'SILENCE ALARMS' MODE
1. PRESS 'SELECT' AND THEN '+ ARROW' BUTTON UNTIL
DISPLAY: ACTION?
CANCEL SILENCE
2. PRESS THE 'SELECT' BUTTON AGAIN

EXAMINE & SET BATTERY VOLTAGE NOMINAL VALUE
1. PRESS THE '+ ARROW' OR '- ARROW' BUTTON UNTIL THE DESIRED CHANNEL IS DISPLAYED.
DISPLAY: PS-Ba:
13.83V NORMAL
2. VERIFY THE DISPLAYED READING WITH A DIGITAL VOLTMETER
3. PRESS THE 'SELECT' BUTTON, AND THE CRTU DISPLAY WILL SWITCH BETWEEN CURRENT/SAVED NOMINAL VOLTAGE VALUES.
DISPLAY: NOMINAL ON #67 (CURRENT)
13.83
DISPLAY: SAVED NOMINAL 6 (STORED)
12.69
4. PRESS THE 'SELECT' BUTTON AND THE CURRENT OR 'NOMINAL ON' VALUE WILL BE SAMPLED AND STORED AS THE 'SAVED NOMINAL' VALUE
5. VERIFY THE 'NOMINAL ON' AND 'SAVED NOMINAL' VALUES ARE EQUIVALENT, REPEAT STEPS #1 THRU #3 & PRESS THE 'CANCEL' BUTTON.

◯ = FIELD VERIFY EXISTING/ REVISE IF AC'D

NEW SHEET

Designed 10/09/09 INSTALL FLASHERS W/GATES & CWT. MLP 292.26 TOWNSHIP ROAD 63B	
Rec'd: 10:	WO#02249 RLT /XRL/JTB

MODIFICATION LEVEL

O. A. LAST LEVEL CHECKED	DJ
LAST LEVEL MOD THIS TYPICAL	DJ
LAST LEVEL BY DESIGNER	DS
CHANGED FROM TYPICAL?	Y
Rev 06.01.04 CRTUCFG32-2BAT.3	

UNION PACIFIC QUALITY PRODUCTIVITY SAFETY SIGNAL DESIGN

Date: 10/19/09	
Des:	XRL
Chk:	RLT
AFE:	02249

UNION PACIFIC RAILROAD
WHITTINGTON, ILLINOIS
TOWNSHIP ROAD 63B
MT. VERNON SUBDIVISION
Office of Sr AVP Engineering - Signal/TCO Omaha, Nebraska

Sht:	2A
DOT:	167612K
MP:	292.26
ID:	030129226.24X

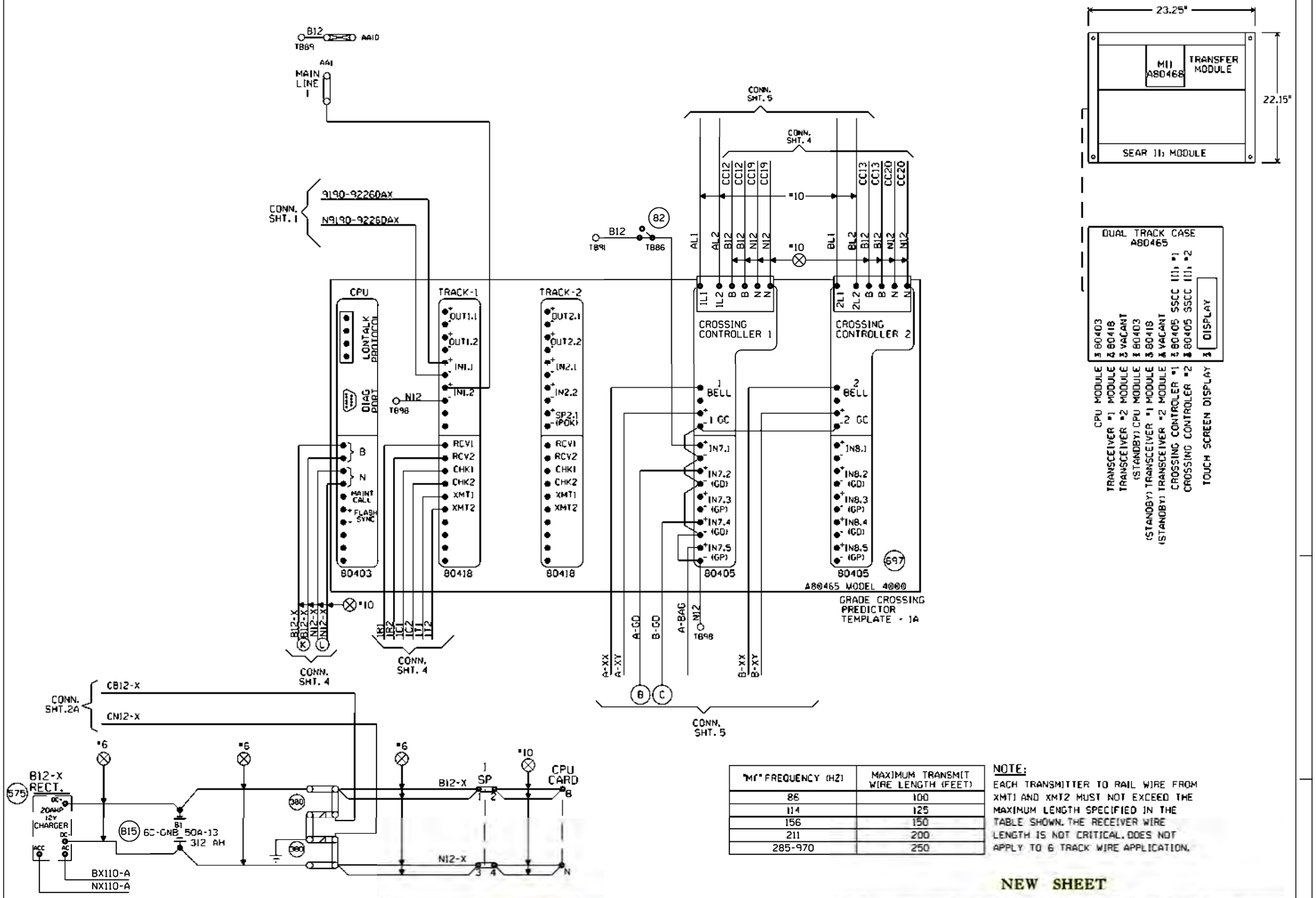

"MT" FREQUENCY (HZ)	MAXIMUM TRANSMIT WIRE LENGTH (FEET)
86	100
114	125
156	150
211	200
285-970	250

NOTE:
EACH TRANSMITTER TO RAIL WIRE FROM XMT1 AND XMT2 MUST NOT EXCEED THE MAXIMUM LENGTH SPECIFIED IN THE TABLE SHOWN. THE RECEIVER WIRE LENGTH IS NOT CRITICAL. DOES NOT APPLY TO 6 TRACK WIRE APPLICATION.

NEW SHEET

Designed: 10/19/09
INSTALL FLASHERS W/GATES & CWT.
MLP 292.26
TOWNSHIP ROAD 63B
Rec'd: WO#02249
IS: RLT / XRL/JTB

MODIFICATION LEVEL	
Q.A. LAST LEVEL CHECKED	DS
LAST LEVEL MOD THIS TYPICAL	DS
LAST LEVEL BY DESIGNER	DS
CHANGED FROM TYPICAL?	Y

UNION PACIFIC
QUALITY PRODUCTIVITY SAFETY
SIGNAL DESIGN

Date: 10/19/09
Des: XRL
Chk: RLT
AFE: 02249

UNION PACIFIC RAILROAD
WHITTINGTON, ILLINOIS
TOWNSHIP ROAD 63B
MT. VERNON SUBDIVISION
Office of Sr AVP Engineering - Signal/TCD Omaha, Nebraska

Sh.: 3
DOT 167612K
MP: 292.26
ID: 030129226.3X

Minimum Program Steps Report

Location and SIN

DOT Number: 167612K
Milepost Number: 292.26
Site Name: WHITTINGTON, IL

SIN: 762010010016 *

* Parameter is part of office check number calculation.

MCF and Template Selection

MCF Name: GCP-T6X-02-1.mcf
MCF Revision: 021
MCFCRC: 6076E435

Template = 1A:6 Trk Bi *

* Parameter is part of office check number calculation.

Minimum Program Steps

TEMPLATE: track 1-Bi, Island
Track 1 : GCP Frequency = 285 Hz
Track 1 : Approach Distance = 3081 ft
Track 1 : Prime Warning Time = 25 sec
Track 1 : Prime UAX = IP *
Track 1 : Prime UAX Pickup = 15 sec *
Track 1 : GCP Transmit Level = Medium (Set in Field)
Track 1 : Isl Frequency = 10.0 kHz

TEMPLATE: AND 1 XR
AND 1 Enable Used = Yes *

TEMPLATE: SSCC
SSCC 1 : Lamp Neutral Test = Off (Set in Field)
SSCC 2 : Lamp Neutral Test = Off (Set in Field)

TEMPLATE: OOS
OOS Control = OOS IPs *

TEMPLATE: IP assignment 1
IN 1.1 = T1 Prime UAX *
IN 1.2 = Out Of Service IP 1 *

TEMPLATE: IP assignment SSCC
IN 7.1 = AND 1 XR Enable *

GCP: track 1
Track 1 : Island Distance = 120 ft *

* Parameter is part of office check number calculation.

Check Numbers

Office Check No. (DT 4.6.0): 2026C159
Office Check Number: 2026C159
Config. Check Number: 113D9A89
(Based on MCF Revision 021)

Parameters not part of office check number calculation:

Track 1 : GCP Frequency = 285 Hz
Track 1 : Approach Distance = 3081 ft
Track 1 : Prime Warning Time = 25 sec
Track 1 : GCP Transmit Level = Medium (Set in Field)
Track 1 : Isl Frequency = 10.0 kHz
SSCC 1 : Lamp Neutral Test = Off (Set in Field)
SSCC 2 : Lamp Neutral Test = Off (Set in Field)

Comments

<none>

Configuration Package File

Filename: 030129226_167612K.pac
Date/Time: 1/19/2010 10:37:23
DT Version: 4.8.5

NEW SHEET

				Designed: 10/19/09 INSTALL FLASHERS W/GATES & CWT. MP 292.26 TOWNSHIP ROAD 63B Rec'd: WO#: 02249 IS: RLT / /XRL/JTB	NOTE: Actual OFFSET and ISLAND distances must be verified by field personnel.	UNION PACIFIC QUALITY PRODUCTIVITY SAFETY SIGNAL DESIGN	Date: 10/19/09 Des: XRL Chk: RLT AFE: 02249	UNION PACIFIC RAILROAD WHITTINGTON, ILLINOIS TOWNSHIP ROAD 63B MT. VERNON SUBDIVISION Office of Sr AVP Engineering - Signal/TCO Omaha, Nebraska	Sh.: 3A DOT 167612K MP: 292.26 ID: 030129226.3AX

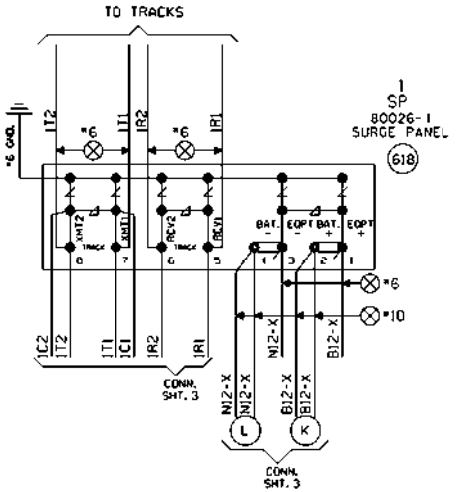

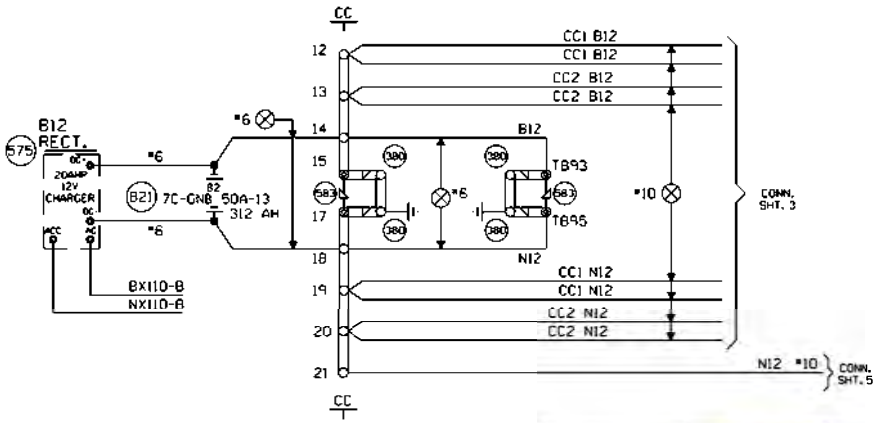

NEW SHEET

Designed: 10/19/09 INSTALL FLASHERS W/GATES & CWT. MLP 292.26 TOWNSHIP ROAD 63B	MODIFICATION LEVEL		UNION PACIFIC SIGNAL DESIGN	Date: 10/19/09	UNION PACIFIC RAILROAD	Sh.: 4
	Q.A. LAST LEVEL CHECKED	DS		Des: XRL	WHITTINGTON, ILLINOIS	DOT 167612K
	LAST LEVEL MOD THIS TYPICAL	DS		Chk: RLT	TOWNSHIP ROAD 63B	MP: 292.26
Rec'd: WO#: 02249	LAST LEVEL BY DESIGNER	DS		AFE: 02249	MT. VERNON SUBDIVISION	ID: 030129226.4X
IS: RLT / XRL/JTB	CHANGED FROM TYPICAL?	Y			Office of Sr AVP Engineering - Signal/TCD Omaha, Nebraska	
	Rev 09.02.09 4K 4TKSPGFC.4					

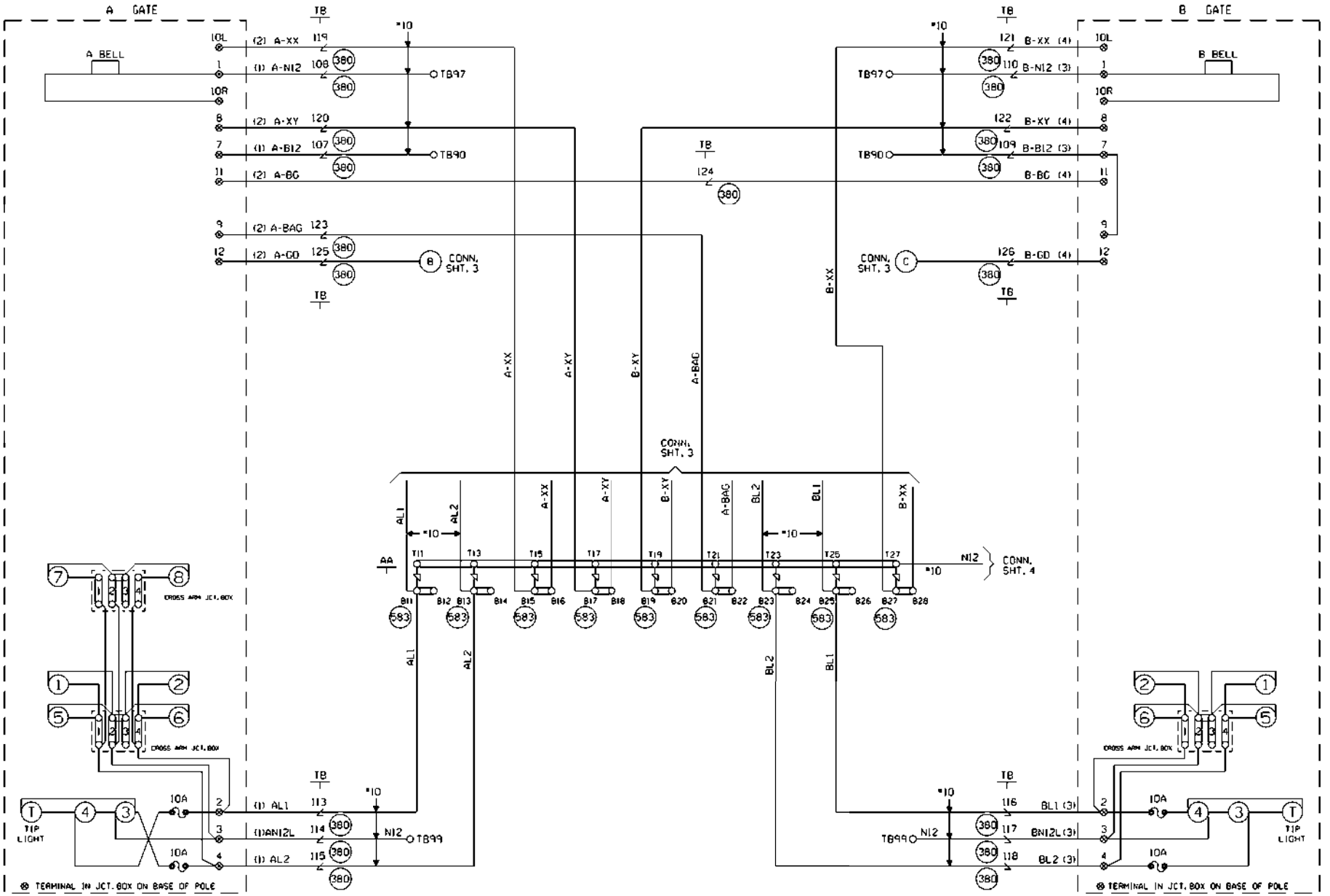

CABLE TABULATION

CABLE NO. 1 5C. NO.6 U.G.B.T.
CABLE NO. 2 7C. NO.14 U.G.B.T.
CABLE NO. 3 5C. NO.6 U.G.B.T.
CABLE NO. 4 7C. NO.14 U.G.B.T.

NEW SHEET

Designed: 10/19/09 INSTALL FLASHERS W/GATES & CWT. MLP 292.26 TOWNSHIP ROAD 63B	MODIFICATION LEVEL		UNION PACIFIC QUALITY PRODUCTIVITY SAFETY SIGNAL DESIGN	Date: 10/19/09	UNION PACIFIC RAILROAD	Sh.: 5
Rec'd: WO#: 02249	Q.A. LAST LEVEL CHECKED	DS		Des: XRL	WHITTINGTON, ILLINOIS	DOT 167612K
IS: /RLT /XRL/JTB	LAST LEVEL MOD THIS TYPICAL	DS		Chk: RLT	TOWNSHIP ROAD 63B	MP: 292.26
	LAST LEVEL BY DESIGNER	DS		AFE: 02249	MT. VERNON SUBDIVISION	ID: 030129226.5X
	CHANGED FROM TYPICAL?	Y			Office of Sr. AVP Engineering - Signal/TCD Omaha, Nebraska	
	ev 09.02.09 4K GFSLTYP.5					

WCH 3597

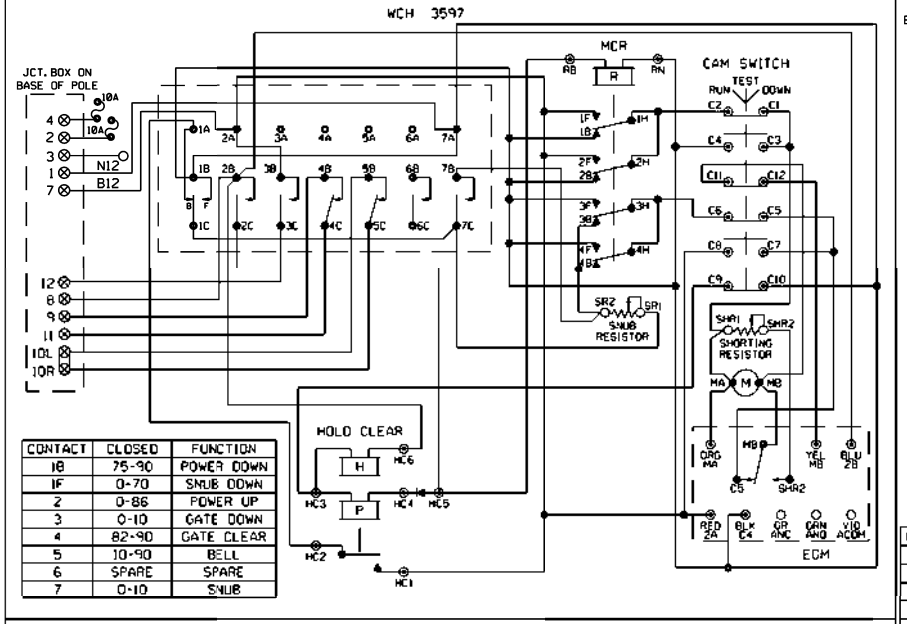

CONTACT	CLOSED	FUNCTION
1B	75-90	POWER DOWN
1F	0-70	SNUB DOWN
2	0-86	POWER UP
3	0-10	GATE DOWN
4	82-90	GATE CLEAR
5	10-90	BELL
6	SPARE	SPARE
7	0-10	SNUB

WCH 3597-RB

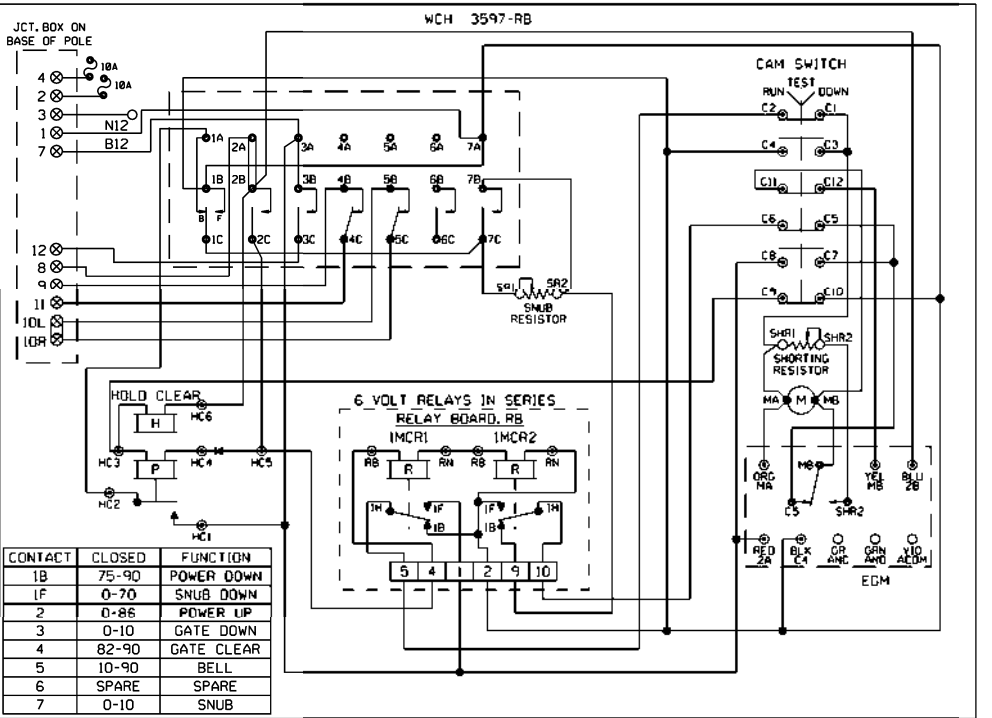

CONTACT	CLOSED	FUNCTION
1B	75-90	POWER DOWN
1F	0-70	SNUB DOWN
2	0-86	POWER UP
3	0-10	GATE DOWN
4	82-90	GATE CLEAR
5	10-90	BELL
6	SPARE	SPARE
7	0-10	SNUB

WCH 3593-E

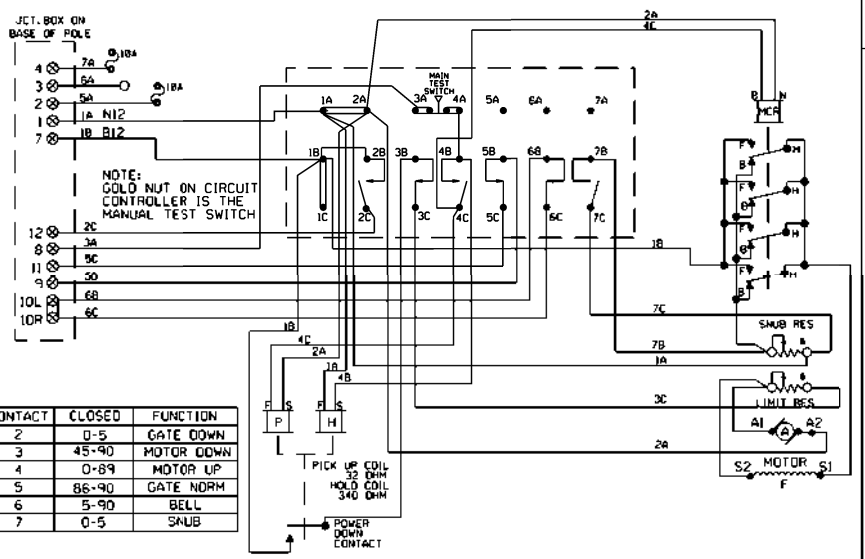

CONTACT	CLOSED	FUNCTION
2	0-5	GATE DOWN
3	45-90	MOTOR DOWN
4	0-89	MOTOR UP
5	86-90	GATE NORM
6	5-90	BELL
7	0-5	SNUB

WCH 3597-E

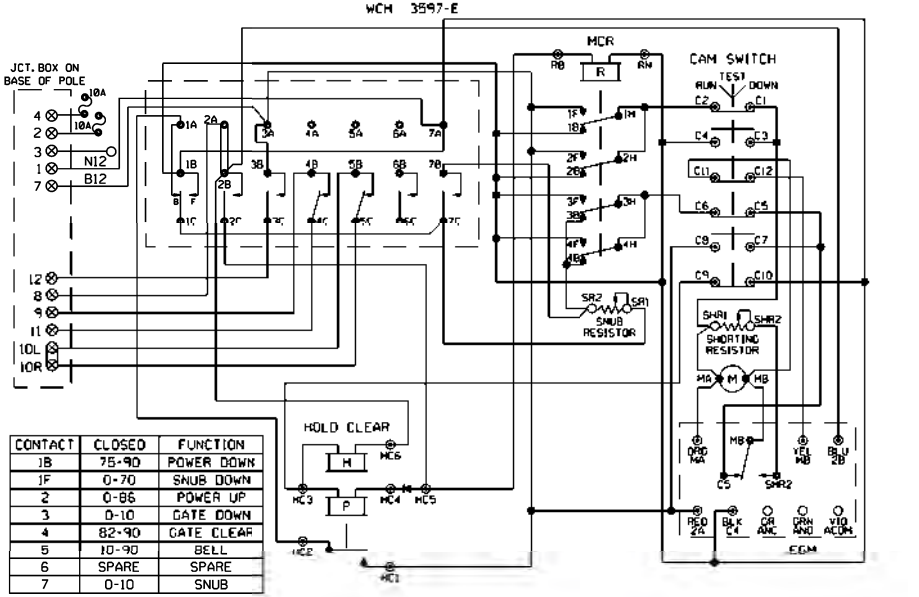

CONTACT	CLOSED	FUNCTION
1B	75-90	POWER DOWN
1F	0-70	SNUB DOWN
2	0-86	POWER UP
3	0-10	GATE DOWN
4	82-90	GATE CLEAR
5	10-90	BELL
6	SPARE	SPARE
7	0-10	SNUB

SHOW TYPE MECH. INSTALLED

ALL MECHANISMS SHOWN IN THE CLEAR POSITION

JCT. BOX ON BASE POLE

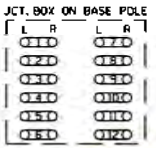

NEW SHEET

Designed: 10/19/09
INSTALL FLASHERS
W/GATES & CWT.
MLP 292.26
TOWNSHIP ROAD 63B

Rec'd: WO#: 02249
IS: RLT
/XRL/JTB

MODIFICATION LEVEL	
O.A. LAST LEVEL CHECKED	DS
LAST LEVEL MOD THIS TYPICAL	DS
LAST LEVEL BY DESIGNER	DS
CHANGED FROM TYPICAL?	N

Rev 09.02.09 4K GWIRING.7

UNION PACIFIC
QUALITY PRODUCTIVITY SAFETY
SIGNAL DESIGN

Date: 10/19/09
Des: XRL
Chk: RLT
AFE: 02249

UNION PACIFIC RAILROAD
WHITTINGTON, ILLINOIS
TOWNSHIP ROAD 63B
MT. VERNON SUBDIVISION
Office of Sr AVP Engineering - Signal/TCD Omaha, Nebraska

Sh.: 6
DOT 167612K
MP: 292.26
ID: 030129226.6X

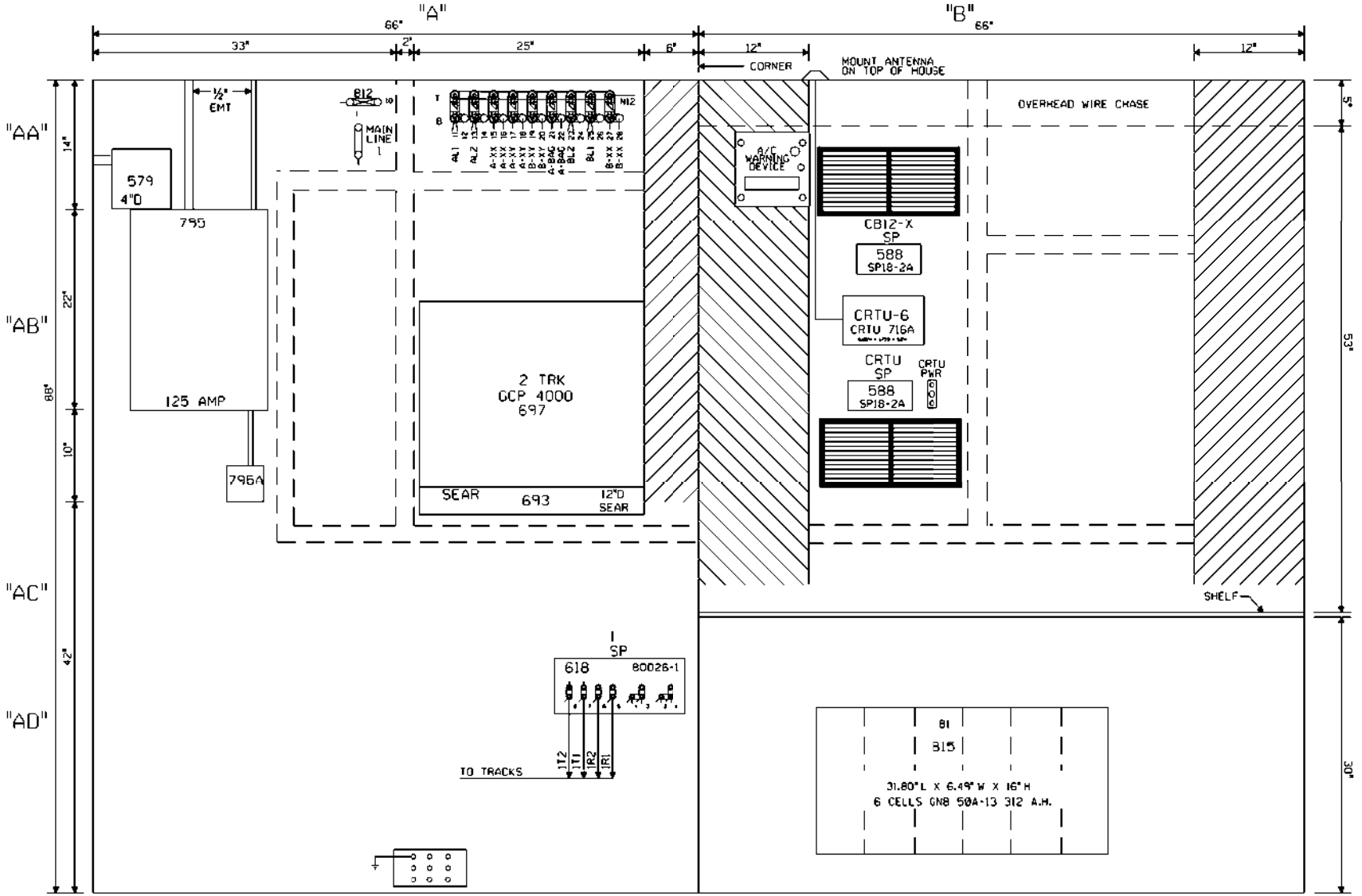

NOTE: ALL DIMENSIONS SHOWN ARE APPROXIMATE.

NEW SHEET

				Designed 10/19/09 INSTALL FLASHERS W/GATES & CWT. MLP 292.26 TOWNSHIP ROAD 63B	MODIFICATION LEVEL		UNION PACIFIC QUALITY PROCESS SAFETY SIGNAL DESIGN	Date: 10/19/09	UNION PACIFIC RAILROAD
				Rev'd: WO#:02249	Q.A. LAST LEVEL CHECKED	DS		Des: XRL	WHITTINGTON, ILLINOIS
				Rev'd: ISs: /XRL /JTB	LAST LEVEL MOD THIS TYPICAL	DS		Chk: RLT	TOWNSHIP ROAD 63B
					LAST LEVEL BY DESIGNER	DS			MT. VERNON SUBDIVISION
					CHANGED FROM TYPICAL?	Y		AFE: 02249	Office of Sr. AVP Engineering - Signal/TCO Omaha, Nebraska
					wp 05.02.09 4K 4TKGFC.8				

Sht:	7
DOT:	167612K
MP:	292.26
ID:	D30129226.7X

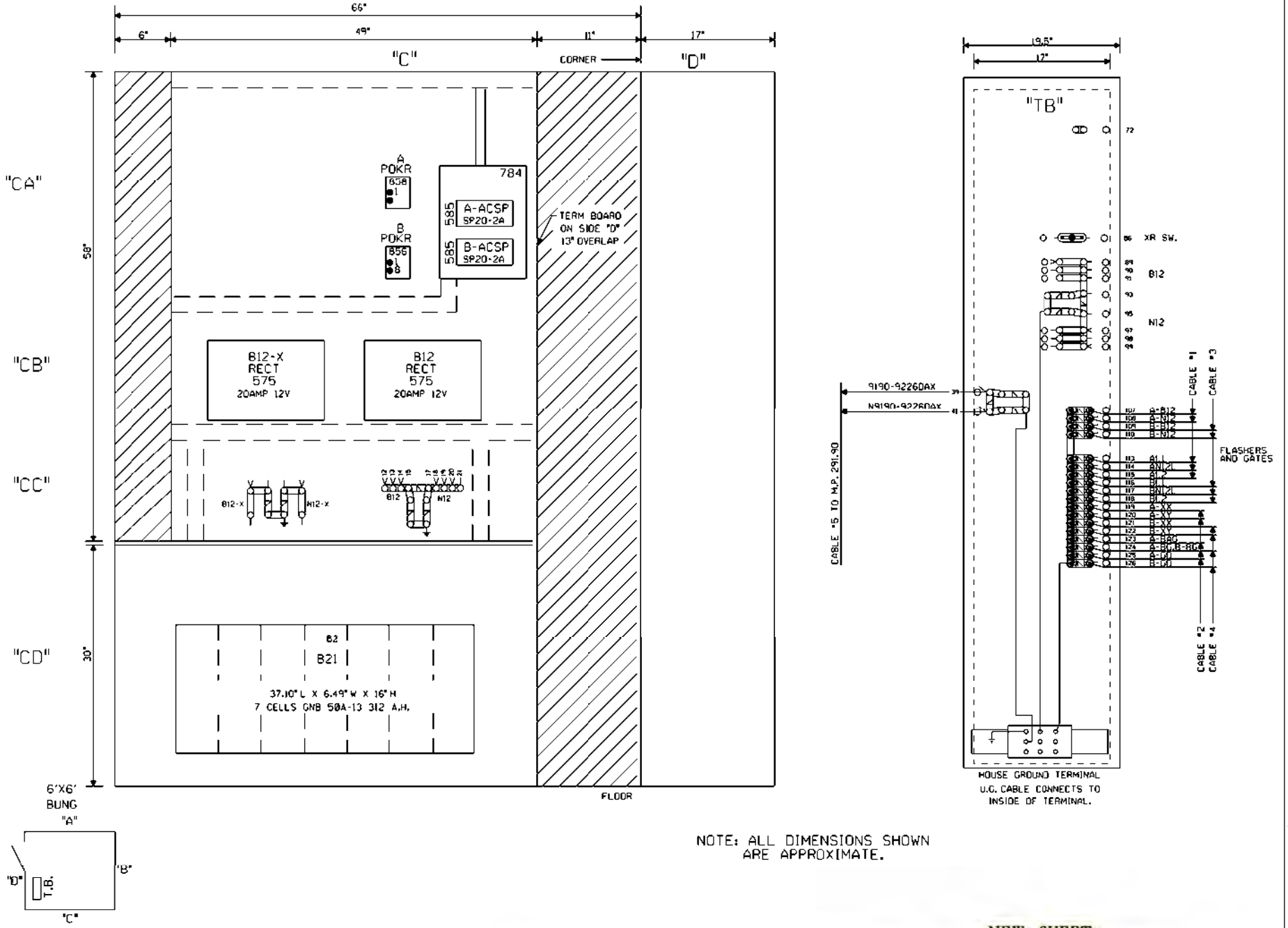

NOTE: ALL DIMENSIONS SHOWN ARE APPROXIMATE.

NEW SHEET

Designed: 10/19/09 INSTALL FLASHERS W/GATES & CWT. M.P 292.26 TOWNSHIP ROAD 63B	MODIFICATION LEVEL		UNION PACIFIC SIGNAL DESIGN	Date: 10/19/09	UNION PACIFIC RAILROAD	Sh.: 8
	Q. A. LAST LEVEL CHECKED	DS		Des: XRL	WHITTINGTON, ILLINOIS	DOT 167612K
	LAST LEVEL MOD THIS TYPICAL	DS		Chk: RLT	TOWNSHIP ROAD 63B	MP: 292.26
Rec#: WO#: 02249	LAST LEVEL BY DESIGNER	DS		AFE: 02249	MT. VERNON SUBDIVISION	ID: D30129226.8X
IS: /RLT /XRL/JTB	CHANGED FROM TYPICAL?	Y			Office of Sr. AVP Engineering - Signal/TCO Omaha, Nebraska	
	09.02.09 4K GFC.9					

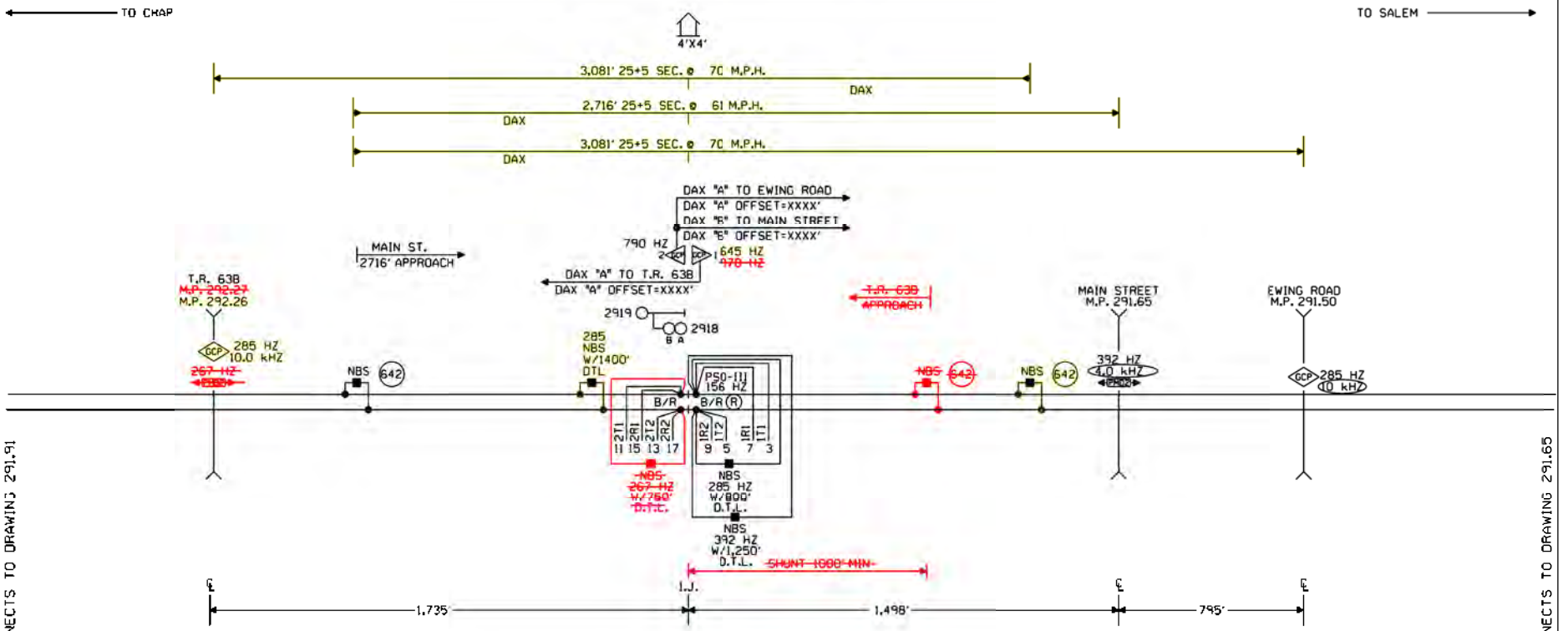

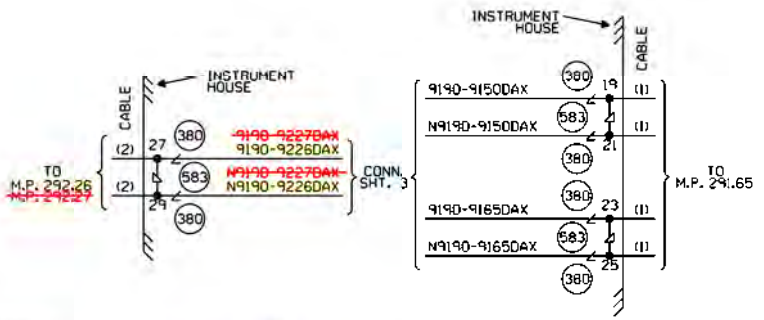

NOTES:

⊗ = TWISTED WIRES
ALL TRACK WIRES 2C. #6
INSULATED 1 TWIST PER FT.

TRANSMITTER AND RECEIVER LEADS
TO BE SEPARATED BY AT LEAST 12" IN TRENCH.
LENGTHS SHOULD NOT EXCEED MANUFACTURER'S
RECOMMENDATION.

ALL BUNGALOW WIRING TO BE #16 AWG FLEX
UNLESS OTHERWISE SPECIFIED EXCEPT ALL GROUND
WIRE TO BE #6 AWG FLEX OR LARGER.

REFER TO UP STANDARD DWG. FOR BUNGALOW
GROUNDING.

= IN

= OUT

= EXIST/REVISE
IF AC'D

S ← → N

CABLE TABULATION

CABLE NO.1-7C.NO.14 U.G.B.T. HOUSE TO M.P. 291.65.
CABLE NO.2-7C.NO.14 U.G.B.T.HOUSE TO M.P. 292.26 ~~292.27~~

WHITTINGTON, ILLINOIS
REMOTE LOCATION
M.P. 291.90
MT. VERNON SUBDIVISION

Designed: 10/19/09 INSTALL FLASHERS W/GATES & CWT. M.P. 292.26 TOWNSHIP ROAD 63B Rec'd: WO#02249 IS: /RLT /XRL/JTB	REV. 11-14-07 INSTALL FLS/GATES & CONSTANT WARNING AT EWING ROAD M.P. 291.50 W.O.#44518 REC#13145 9-24-07 JTB RLT/WITT/CTC/JNM	MODIFICATION LEVEL Q.A. LAST LEVEL CHK'D. DJ LAST LEVEL MOD. THIS TYP. DJ LAST LEVEL BY DESIGNER. DJ CHANGED FROM TYP.? Y/N Y	UNION PACIFIC QUALITY PROTECTIVITY SAFETY SIGNAL DESIGN	DES: CTC DIG: CTC CHK: RLT/JTB A.F.E. 44518 ID: 030129190.1X	UNION PACIFIC RAILROAD SALEM, ILLINOIS TO CHAP, ILLINOIS C.T.C. CIRCUITS OFFICE OF CHIEF ENG'R DHAHA NEBR.	DATE 2-20-04 SHEET 1 DWG 291.90 S-301

(REV. 06.01.04) (REMOTE.1)

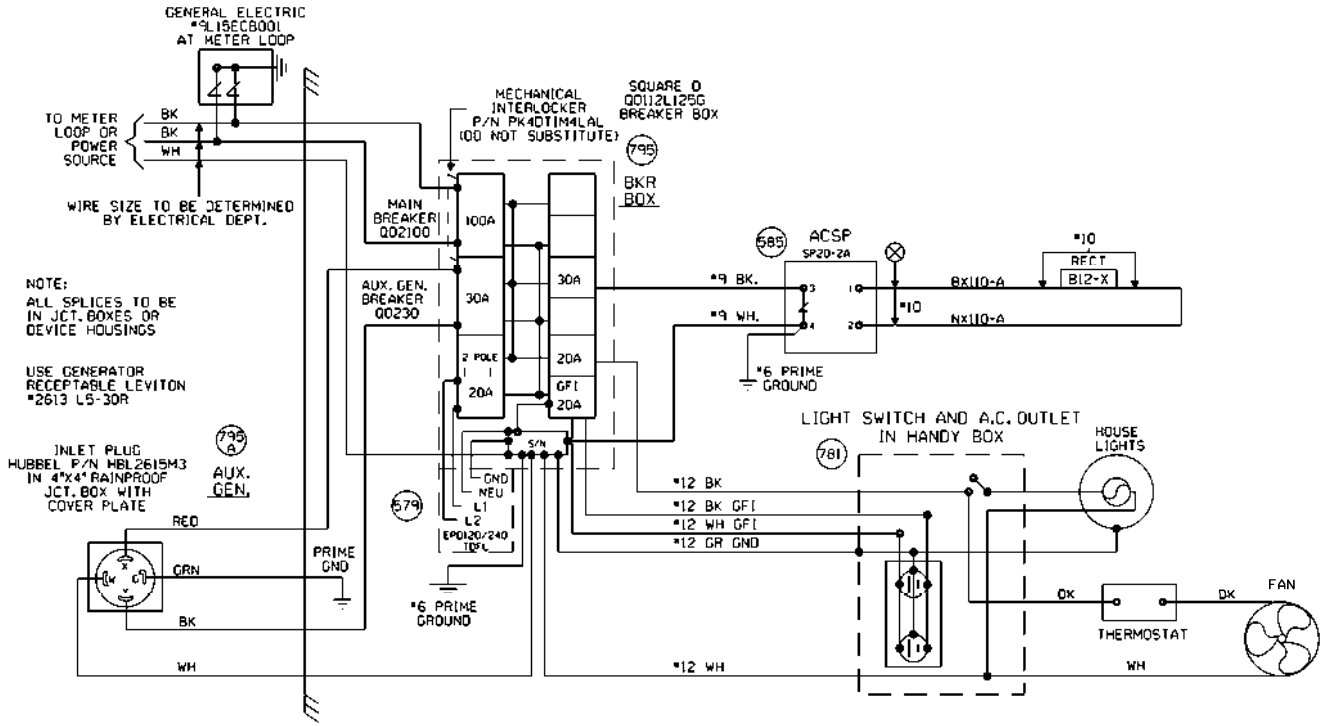

WHITTINGTON, ILLINOIS
REMOTE LOCATION
M.P. 291.90
MT. VERNON SUBDIVISION

					REV. 11-14-07 INSTALL FLS/GATES & CONSTANT WARNING AT EWING ROAD M.P. 291.50 W.O.#44518 REC#13145 9-24-07 JTB RLT/WITT/CTC/JNM	MODIFICATION LEVEL		UNION PACIFIC QUALITY PROJECTIVITY SAFETY SIGNAL DESIGN	DES: CTC DIG: CTC CHK: JTB A.F.E. 44518 ID: 030129190.2X	UNION PACIFIC RAILROAD SALEM, ILLINOIS TO CHAP, ILLINOIS C.T.C. CIRCUITS OFFICE OF CHIEF ENG'R DHAHA NEBR.	DATE 2-20-04 SHEET 2 DWG 291.90 S-301
						Q.A. LAST LEVEL CHK'D.	DJ				
						LAST LEVEL MOD. THIS TYP.	DJ				
						LAST LEVEL BY DESIGNER.	DJ				
						CHANGED FROM TYP.? Y/N	Y				

(REV. 07.30.04: (SEARAC.2)

3-13-23-32-42-50

~~PROGRAM NOTES~~
~~USE TEMPLATE 5A FOR PROPER XING CONFIGURATION~~
~~ASSIGN T1 DAX "A" TO OUT 1.1~~
~~ASSIGN T2 DAX "A" TO OUT 2.1~~
~~ASSIGN T2 DAX "B" TO OUT 2.2~~

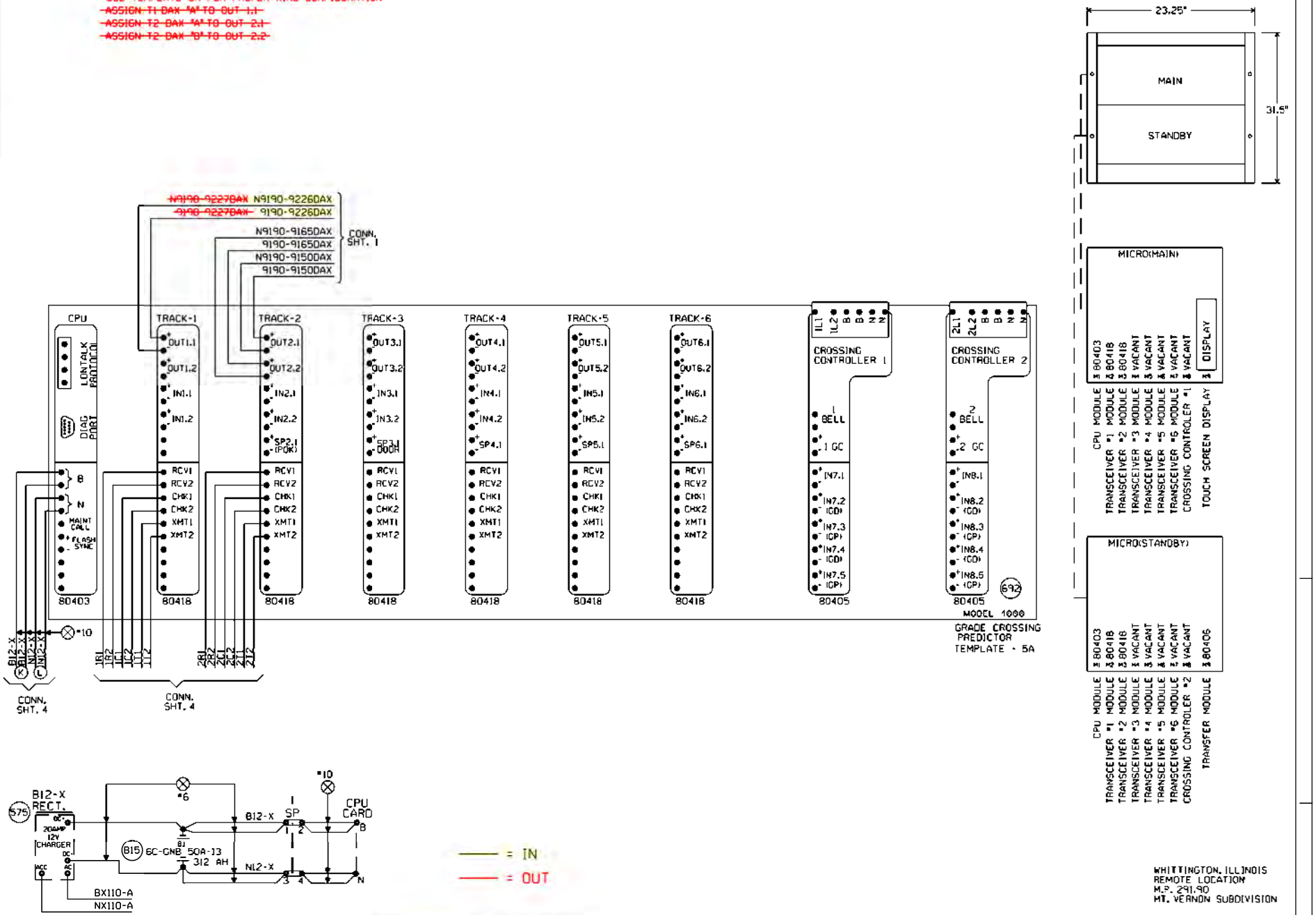

WHITTINGTON, ILLINOIS
REMOTE LOCATION
M.P. 291.90
MT. VERNON SUBDIVISION

Designed: 10/19/09 INSTALL FLASHERS W/GATES & CWT. M.P. 292.26 TOWNSHIP ROAD 638 Rec'd: WO#02249 IS: /RLT / /XRL/JTB	REV. 11-14-07 INSTALL FLS/GATES & CONSTANT WARNING AT EWING ROAD M.P. 291.50 W.O.#44518 REC#13145 9-24-07 JTB RLT/WITT/CTC/JNM	MODIFICATION LEVEL		UNION PACIFIC QUALITY PROTECTIVITY SAFETY SIGNAL DESIGN	DES: CTC	UNION PACIFIC RAILROAD SALEM, ILLINOIS TO CHAP, ILLINOIS C.T.C. CIRCUITS	DATE 2-20-04
		Q.A. LAST LEVEL CHK'D.	DJ		DIG: CTC		SHEET 3
		LAST LEVEL MOD. THIS TYP.	DJ		CHK: JTB		DWG 291.90
		LAST LEVEL BY DESIGNER.	DJ		A.F.E. 44518		
		CHANGED FROM TYP.? Y/N	Y		ID: 030129190.3X	OFFICE OF CHIEF ENG'R DHAHA NEBR.	S-301

(REV. 07.30.04) I4TKB4GF.4 I

4-14-24-33-51

```
Minimum Program Steps Report
----------------------------

Location and SIN
----------------
DOT Number: 000000R
Milepost Number: 291.90
Site Name: Whittington, IL

SIN: 762010010016 *

* Parameter is part of office check number calculation.

MCF and Template Selection
--------------------------
MCF Name: GCP-T6X-01-2.mcf
MCF Revision: 012
MCFCRC: 0DFE7A0C

Template = 5A:3 Remote pairs *

* Parameter is part of office check number calculation.

Minimum Program Steps
---------------------
TEMPLATE:  track 1-Remote Dax
Track 1 : GCP Frequency = 645 Hz
Track 1 : Approach Distance = 1406 ft (See Plans)
Track 1 : Dax A Warning Time = 25 sec *
Track 1 : Dax A Offset Distance = 1675 ft (Verify in Field)
Track 1 : GCP Transmit Level = Medium (Set in Field)

TEMPLATE:  track 2-Remote Dax
Track 2 : GCP Frequency = 790 Hz
Track 2 : Approach Distance = 1277 ft (See Plans)
Track 2 : Dax A Warning Time = 25 sec *
Track 2 : Dax A Offset Distance = 2233 ft (Verify in Field)
Track 2 : GCP Transmit Level = Medium (Set in Field)

TEMPLATE:  track 2-Remote Daxes
Track 2 : Dax B Used = Yes *
Track 2 : Dax B Warning Time = 25 sec *
Track 2 : Dax B Offset Distance = 1439 ft (Verify in Field)

TEMPLATE:  OP assignment 1
OUT 1.1 = T1 Dax A *
OUT 2.1 = T2 Dax A *
OUT 2.2 = T2 Dax B *

* Parameter is part of office check number calculation.

Check Numbers
-------------
Office Check No. (DT 4.6.0): 6D35184D
Office Check Number: 6D35184D
Config. Check Number: 404D2D10
(Based on MCF Revision 012)

Parameters not part of office check number calculation:

Track 1 : GCP Frequency = 645 Hz
Track 1 : Approach Distance = 1406 ft (See Plans)
Track 1 : Dax A Offset Distance = 1675 ft (Verify in Field)
Track 1 : GCP Transmit Level = Medium (Set in Field)
Track 2 : GCP Frequency = 790 Hz
Track 2 : Approach Distance = 1277 ft (See Plans)
Track 2 : Dax A Offset Distance = 2233 ft (Verify in Field)
Track 2 : GCP Transmit Level = Medium (Set in Field)
Track 2 : Dax B Offset Distance = 1439 ft (Verify in Field)

Comments
--------
<none>

Configuration Package File
--------------------------
Filename: 030129190_000000R.pac
Date/Time: 12/30/2009 13:52:14
DT Version: 4.8.5
```

NEW SHEET

				Designed 10/19/09 INSTALL FLASHERS W/GATES & CWT. M.P. 292.26 TOWNSHIP ROAD 638 Rec'd: WO#: 02249 ISs: /XRL/JTB	NOTE: Actual OFFSET and ISLAND distances must be verified by field personnel.	UNION PACIFIC SAFETY SIGNAL DESIGN	Date: 10/19/09 Des: XRL Chk: AFE: 02249	UNION PACIFIC RAILROAD WHITTINGTON, ILLINOIS REMOTE LOCATION MT. VERNON SUBDIVISION Office of Sr. AVP Engineering - Signal/TCO Omaha, Nebraska

Sh.:	3A
DOT	000000R
MP:	291.90
ID:	030129190.3AX

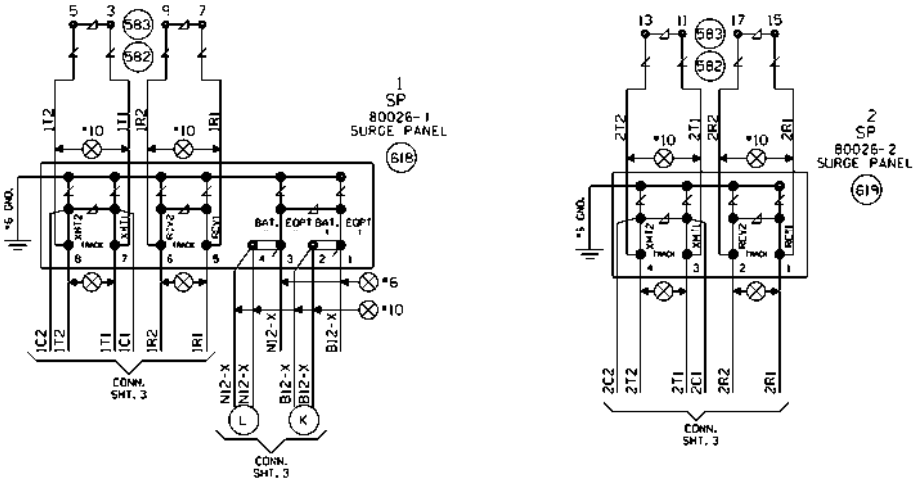

WHITTINGTON, ILLINOIS
REMOTE LOCATION
M.P. 291.90
MT. VERNON SUBDIVISION

REV. 11-14-07 INSTALL FLS/GATES & CONSTANT WARNING AT EWING ROAD M.P. 291.50 W.O.#44518 REC#13145 9-24-07 JTB RLT/WITT/CTC/JNM	MODIFICATION LEVEL		UNION PACIFIC QUALITY PROJECTIVITY SAFETY SIGNAL DESIGN	DES: CTC DIG: CTC CHK: JTB A.F.E. 44518 ID: 030129190.4X	UNION PACIFIC RAILROAD SALEM, ILLINOIS TO CHAP, ILLINOIS C.T.C. CIRCUITS OFFICE OF CHIEF ENG'R DHAHA NEBR.	DATE 2-20-04 SHEET 4 DWG 291.90 S-301
	Q.A. LAST LEVEL CHK'D.	DJ				
	LAST LEVEL MOD. THIS TYP.	DJ				
	LAST LEVEL BY DESIGNER.	DJ				
	CHANGED FROM TYP.? Y/N	Y				

(REV. 06.01.04) (REMOTE.4)

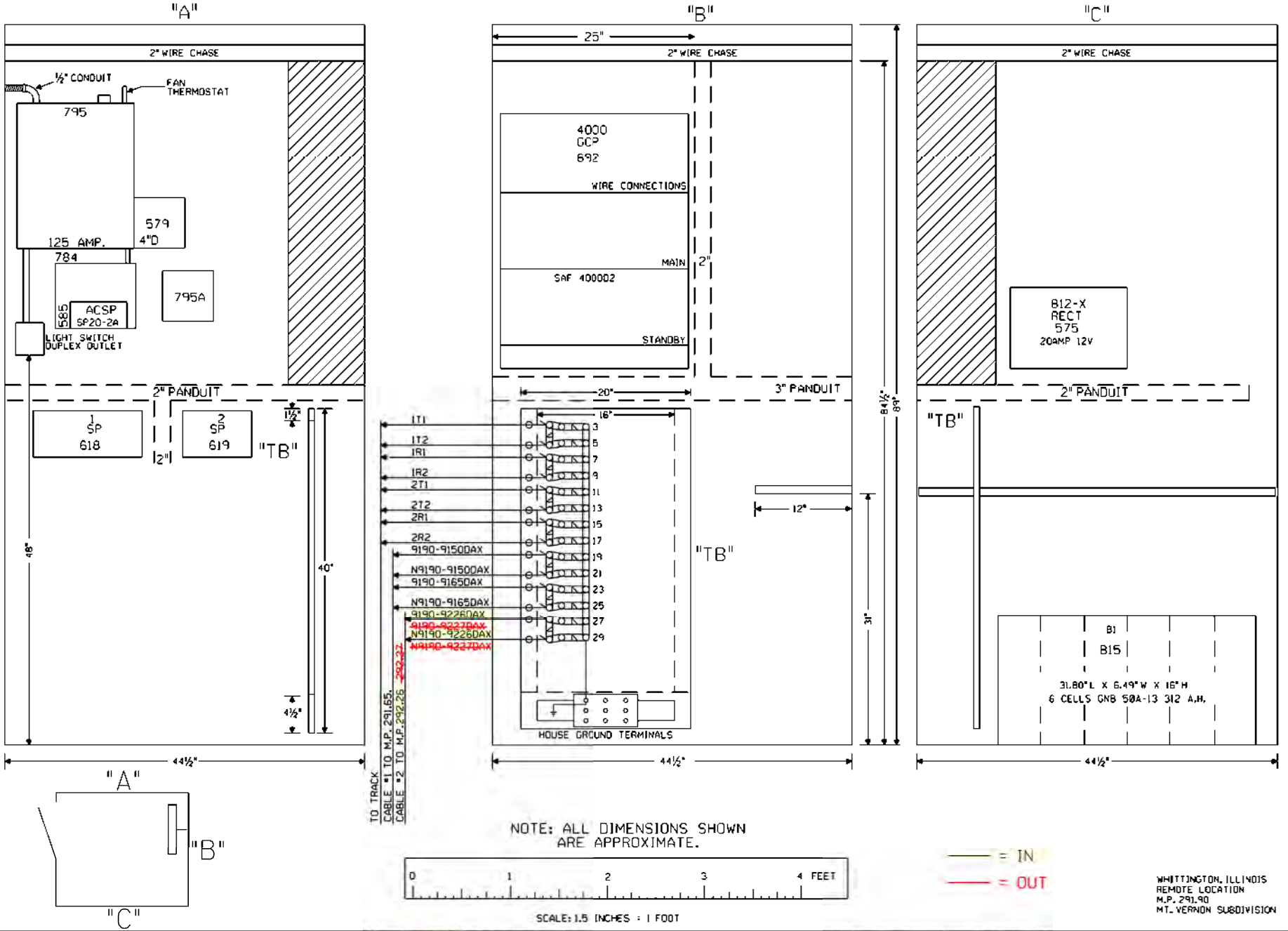
"A"
2" WIRE CHASE
½" CONDUIT
FAN THERMOSTAT
795
579
4"D
125 AMP.
784
795A
585
ACSP
SP20-2A
LIGHT SWITCH
DUPLEX OUTLET
2" PANDUIT
1
SP
618
2
SP
619
2"
"TB"
1½"
48"
40"
4½"
44½"
"B"
25"
2" WIRE CHASE
4000
GCP
692
WIRE CONNECTIONS
MAIN
SAF 400002
STANDBY
2"
20"
3" PANDUIT
16"
1T1
1T2
1R1
1R2
2T1
2T2
2R1
2R2
9190-9150DAX
N9190-9150DAX
9190-9165DAX
N9190-9165DAX
9190-9226DAX
N9190-9226DAX
3
5
7
9
11
13
15
17
19
21
23
25
27
29
"TB"
12"
31"
84½"
89"
HOUSE GROUND TERMINALS
44½"
TO TRACK
CABLE #1 TO M.P. 291.65.
CABLE #2 TO M.P. 292.26
"C"
2" WIRE CHASE
812-X
RECT
575
20AMP 12V
2" PANDUIT
"TB"
B1
B15
31.80"L X 6.49"W X 16"H
6 CELLS GNB 50A-13 312 A.H.
44½"
"A"
"B"
"C"
NOTE: ALL DIMENSIONS SHOWN
ARE APPROXIMATE.
0
1
2
3
4 FEET
SCALE: 1.5 INCHES = 1 FOOT
= IN
= OUT
WHITTINGTON, ILLINOIS
REMOTE LOCATION
M.P. 291.90
MT. VERNON SUBDIVISION
INSTALL FLASHERS W/GATES & CNT. M.P. 292.26 TOWNSHIP ROAD 638
REV. 11-14-07
INSTALL FLS/GATES & CONSTANT WARNING AT EWING ROAD M.P. 291.50
W.O.#44518
REC#131145
9-24-07 JTB
RLT/WITT/CTC/JNM
MODIFICATION LEVEL
Q.A. LAST LEVEL CHK'D. OJ
LAST LEVEL MOD. THIS TYP. OJ
LAST LEVEL BY DESIGNER. OJ
CHANGED FROM TYP.2 Y/N Y
UNION PACIFIC
SAFETY
SIGNAL DESIGN
DES: CTC
DIG: CTC
CHK: JTB
A.F.E. 44518
ID=0301291905X
UNION PACIFIC RAILROAD
SALEM, ILLINOIS TO
CHAP, ILLINOIS
C.T.C. CIRCUITS
OFFICE OF CHIEF ENG'R
OMAHA NEBR.
DATE 2-20-04
SHEET 5
DWG 291.90
S-301
(REV. 06.01.04) (REMOTE.5)