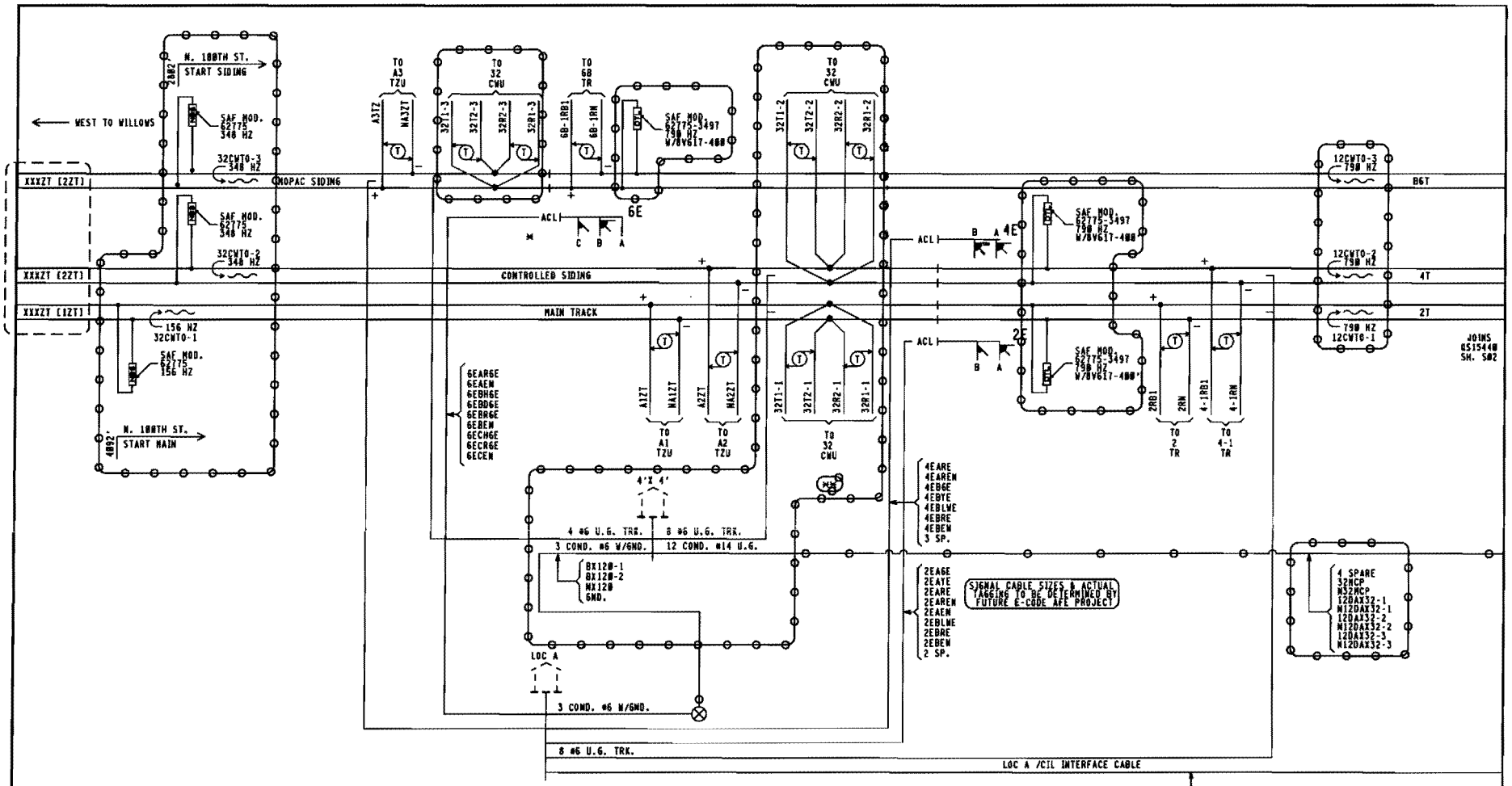

PRELIMINARY

NEW SHEET

PROJECT #: TL2089035
DESIGNED BY: S. SPENCE
CHECKED BY: E. HORNE
DATE: 11-17-10

ALL EXSITNG EXCEPT
= IN
= NOTE

NOTE SHEET REDRAWN FROM DWG. 8406-1544 SH. 2

NOTE: (⊗) = LOCATION OF REMOTE 4'X4' HOUSE

NOTES:
1. (⊗) = LOCATION OF HOUSE.
2. [ ] = TAGGING PURPOSES ONLY.

CSX TRANSPORTATION
RAIL TRANSPORT GROUP ENGINEERING
COMMUNICATIONS AND SIGNALS

C.P. EAST ST. ELMO

SIG. 2E, 4E, & 6E
TRACK AND SIGNAL PLAN
ALTAMONT, IL M.P. OS-154.48

DESIGNED	DIGITIZED	CHECKED	DATE
IRC/SWS	IRC/SWS	IRC/EJH	11-17-10

DESIGN DATE	REV. NO.	DRAWING	SHEET NO	FILE	SHEET
11-17-10	1	8406-1544	2A	0S15440	S01

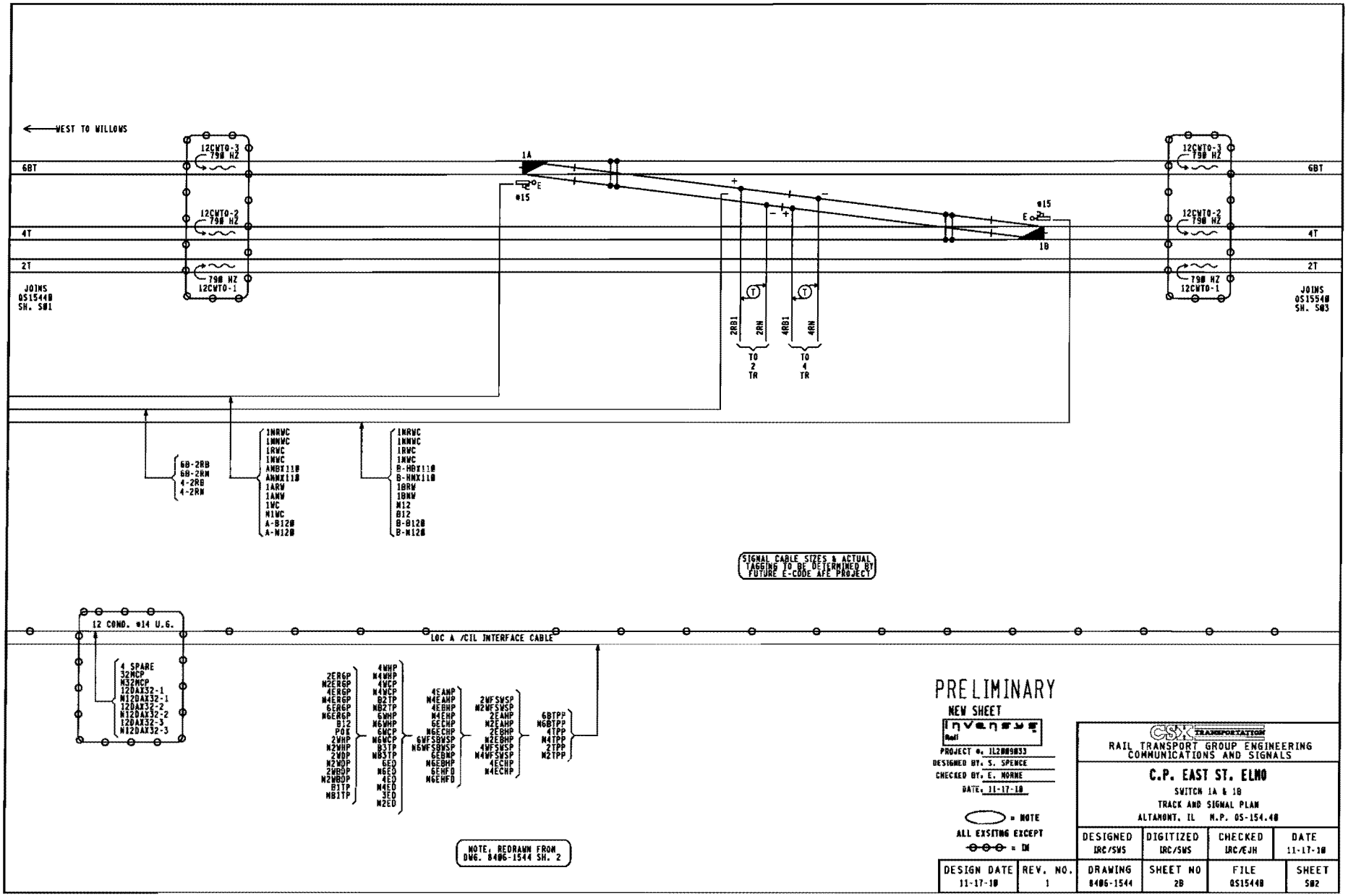

PRELIMINARY

NEW SHEET

Invensys Rail

PROJECT #: IL2009033

DESIGNED BY: S. SPENCE

CHECKED BY: E. NORNE

DATE: 11-17-10

= NOTE

ALL EXSITING EXCEPT

= IN

CSX TRANSPORTATION

RAIL TRANSPORT GROUP ENGINEERING
COMMUNICATIONS AND SIGNALS

C.P. EAST ST. ELMO

SWITCH 1A & 1B

TRACK AND SIGNAL PLAN

ALTAMONT, IL N.P. OS-154.40

DESIGNED	DIGITIZED	CHECKED	DATE
IRC/SWS	IRC/SWS	IRC/EJH	11-17-10

DESIGN DATE	REV. NO.	DRAWING	SHEET NO	FILE	SHEET
11-17-10	1	8406-1544	2B	OS15440	S02

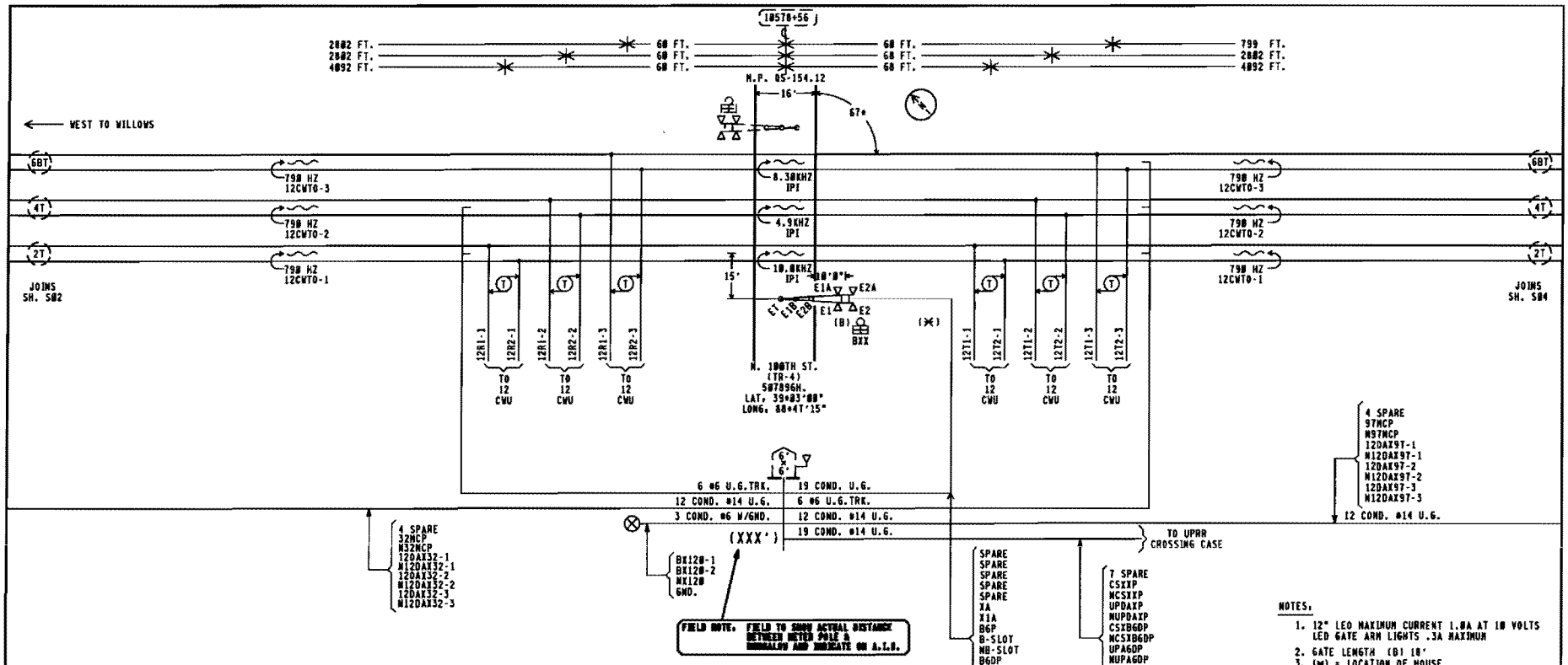

APPROACH LENGTHS TABLE DC, AFO, TYPE C, MOTION, CWT, OR OTHER	WESTWARD SIDING CWT	EASTWARD SIDING CWT	WESTWARD SIDING CWT	EASTWARD SIDING CWT	WESTWARD MAIN CWT	EASTWARD MAIN CWT
STANDARD MINIMUM WARNING TIME IN SECONDS	25	25	25	25	25	25
ROADWAY GATE TIME IN SECONDS	5	5	5	5	5	5
CLEARANCE TIME IN SECONDS	9	9	9	9	9	9
DOT TRAFFIC LIGHT SIMULTANEOUS PREEMPT TIME IN SECONDS *	0	0	0	0	0	0
DESIGNED WARNING TIME FOR TRAINS AT TIME TABLE SPEED	39 SEC.	39 SEC.	39 SEC.	39 SEC.	39 SEC.	39 SEC.
DOT TRAFFIC LIGHT ADVANCE PREEMPT TIME IN SECONDS *	0	0	0	0	0	0
CONTROL EQUIPMENT DECISION TIME IN SECONDS	5	5	5	5	5	5
DESIGNED DETECTION TIME FOR TRAINS AT TIME TABLE SPEED	41 SEC.	41 SEC.	41 SEC.	41 SEC.	41 SEC.	41 SEC.
TIME TABLE MAXIMUM TRAIN SPEED IN MILES PER HOUR	40	40	40	40	60	60
BUFFER SPEED IN MILES PER HOUR	5	5	5	5	5	5
TOTAL WARNING SYSTEM DESIGN SPEED IN MILES PER HOUR	45	45	45	45	65	65
APPROACH DISTANCE TO ISLAND EDGE IN FEET	2002	2002	2002	2002	4092	4092
HALF WIDTH OF ISLAND IN FEET	40	40	40	40	60	60
APPROXIMATE MILE POSTS FOR APPROACH CIRCUIT	154.65	153.59	154.65	153.59	154.90	153.35

*AUTHORIZING AGENCY. NONE
*DATE OF REQUIREMENT. NONE
*AMOUNT OF TIME (SEC.). NONE

LOC A / CIL INTERFACE CABLE

PRELIMINARY
NEW WORK EXCEPT
Inventory
Rail

PROJECT #. JL2005033
DESIGNED BY. S. SPENCE
CHECKED BY. E. HORNE
DATE. 11-17-10

= NOTE
= EXISTING

NOTES:

1. 12" LED MAXIMUM CURRENT 1.0A AT 10 VOLTS LED GATE ARM LIGHTS .3A MAXIMUM
2. GATE LENGTH (B) 10'
3. (X) = LOCATION OF HOUSE
4. (N) = APPROXIMATE COMPASS NORTH.
5. TRANSMITTER LEADS FOR MOTION OR PREDICTOR EQUIPMENT SHOULD BE CONNECTED ON THE BUNGALOW OR SHORT LEAD SIDE OF THE CROSSING.
6. ISLAND TRACK LEADS SHOULD BE CONNECTED 50 FEET FROM ROAD EDGE BUT ON NARROW ROADS (20' OR LESS) ISLAND LENGTH SHALL BE 120 FEET.
7. WARNING SYSTEM APPROACH CIRCUIT DISTANCES ARE TO BE MEASURED FROM THE ISLAND TRACK CONNECTIONS.

CSX TRANSPORTATION
RAIL TRANSPORT GROUP ENGINEERING
COMMUNICATIONS AND SIGNALS

C.P. EAST ST. ELMO

N. 100TH ST.
TRACK AND SIGNAL PLAN
ALTAMONT, IL M.P. QS-154.40

DESIGNED	DIGITIZED	CHECKED	DATE
JRC/SWS	JRC/SWS	JRC/EJH	11-17-10

DESIGN DATE	REV. NO.	DRAWING	SHEET NO	FILE	SHEET
11-17-10	1	8406-1544	2C	QS15440	503

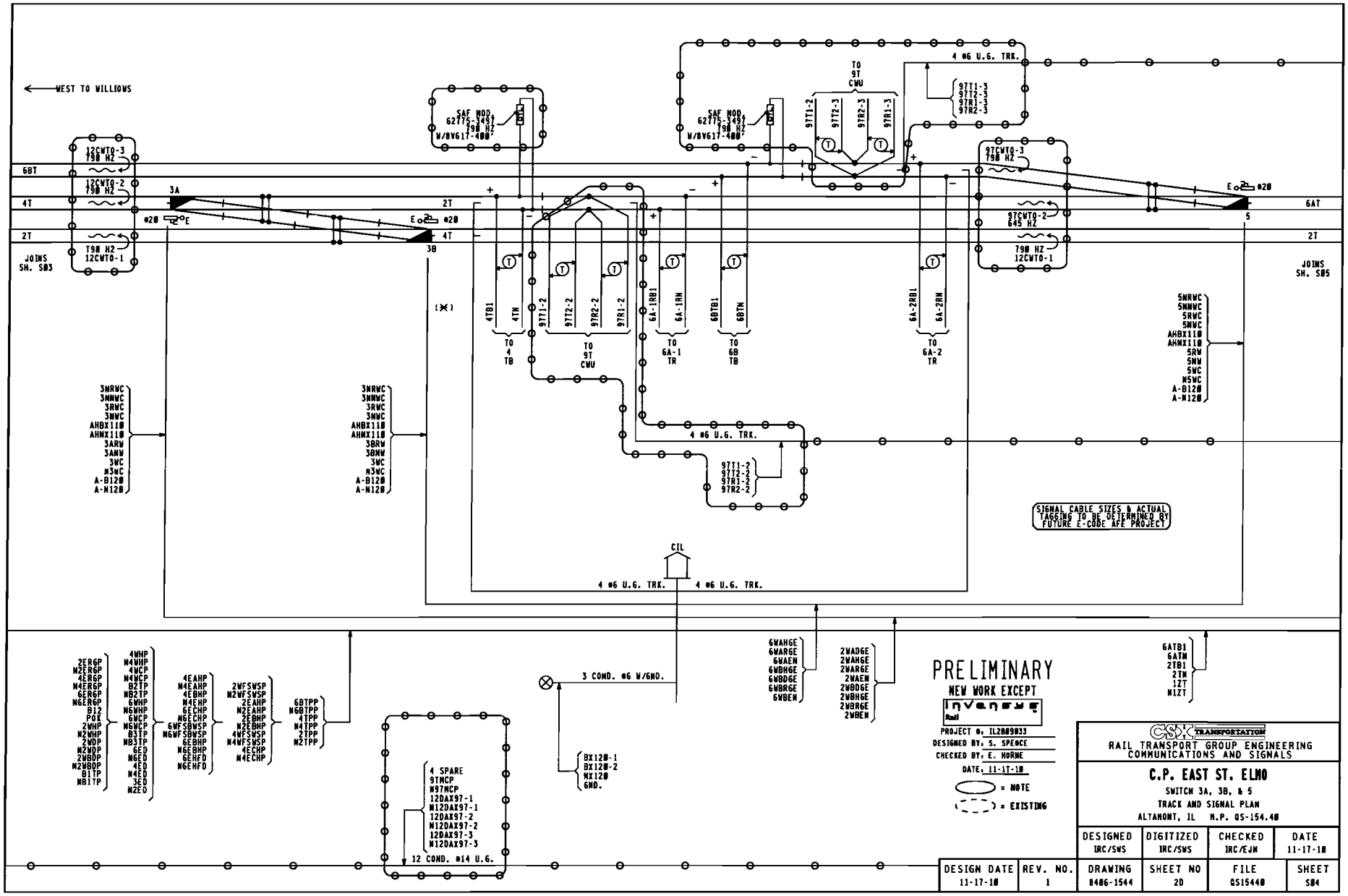
WEST TO WILLIOWS
12CWTO-3
79Ø HZ
12CWTO-2
79Ø HZ
T9Ø HZ
12CWTO-1
JOINS
SH. SØ3
6BT
4T
2T
3A
3B
#2Ø
E
SAF MOD.
62775-3491
79Ø HZ
W/8V617-4ØØ'
TO
9T
CWU
97T1-2
97T2-3
97R2-3
97R1-3
97T1-3
97T2-3
97R1-3
97R2-3
4 #6 U.G. TRK.
97CWTO-3
79Ø HZ
97CWTO-2
645 HZ
79Ø HZ
12CWTO-1
6AT
5
JOINS
SH. SØ5
4TB1
4TN
97T1-2
97T2-2
97R2-2
97R1-2
6A-1RB1
6A-1RN
6BTB1
6BTN
6A-2RB1
6A-2RN
TO
4
TB
TO
9T
CWU
TO
6A-1
TR
TO
6B
TB
TO
6A-2
TR
5NRWC
5NWWC
5RWC
5NWC
AHBX11Ø
AHNX11Ø
5RW
5NW
5WC
N5WC
A-B12Ø
A-N12Ø
3NRWC
3NWWC
3RWC
3NWC
AHBX11Ø
AHNX11Ø
3BRW
3BNW
3WC
N3WC
A-B12Ø
A-N12Ø
SIGNAL CABLE SIZES & ACTUAL
TAGGING TO BE DETERMINED BY
FUTURE E-CODE AFE PROJECT
CIL
4 #6 U.G. TRK.
2ER6P
N2ER6P
4ER6P
N4ER6P
6ER6P
N6ER6P
B12
POI
2WHP
N2WHP
2WDP
N2WDP
2WBDP
N2WBDP
B1TP
NB1TP
4WHP
N4WHP
4WCP
N4WCP
B2TP
NB2TP
6WHP
N6WHP
6WCP
N6WCP
B3TP
NB3TP
6ED
N6ED
4ED
N4ED
3ED
N2ED
4EAHP
N4EAHP
4EBHP
N4EHP
6ECHP
N6ECHP
6WFSBWSP
N6WFSBWSP
6EBHP
N6EBHP
6EHFD
N6EHFD
2WFSWSP
N2WFSWSP
2EAHP
N2EAHP
2EBHP
N2EBHP
4WFSWSP
N4WFSWSP
4ECHP
N4ECHP
6BTPP
N6BTPP
4TPP
N4TPP
2TPP
N2TPP
4 SPARE
9TNCP
N9TNCP
12DAX97-1
N12DAX97-1
12DAX97-2
N12DAX97-2
12DAX97-3
N12DAX97-3
12 COND. #14 U.G.
3 COND. #6 W/6NO.
8X12Ø-1
8X12Ø-2
NX12Ø
6NO.
6WAHGE
6WARGE
6WAEN
6WBHGE
6WBDGE
6WBRGE
6WBEN
2WADGE
2WAHGE
2WARGE
2WAEN
2WBDGE
2WBHGE
2WBRGE
2WBEN
6ATB1
6ATN
2TB1
2TN
1ZT
N1ZT
PRELIMINARY
NEW WORK EXCEPT
Invensys Rail
PROJECT #: IL2009033
DESIGNED BY: S. SPENCE
CHECKED BY: E. HORNE
DATE: 11-17-10
= NOTE
= EXISTING
CSX TRANSPORTATION
RAIL TRANSPORT GROUP ENGINEERING
COMMUNICATIONS AND SIGNALS
C.P. EAST ST. ELMO
SWITCH 3A, 3B, & 5
TRACK AND SIGNAL PLAN
ALTAMONT, IL M.P. QS-154.40
DESIGNED IRC/SWS
DIGITIZED IRC/SWS
CHECKED IRC/EJH
DATE 11-17-10
DESIGN DATE 11-17-10
REV. NO. 1
DRAWING 8406-1544
SHEET NO 2D
FILE QS1544Ø
SHEET SØ4

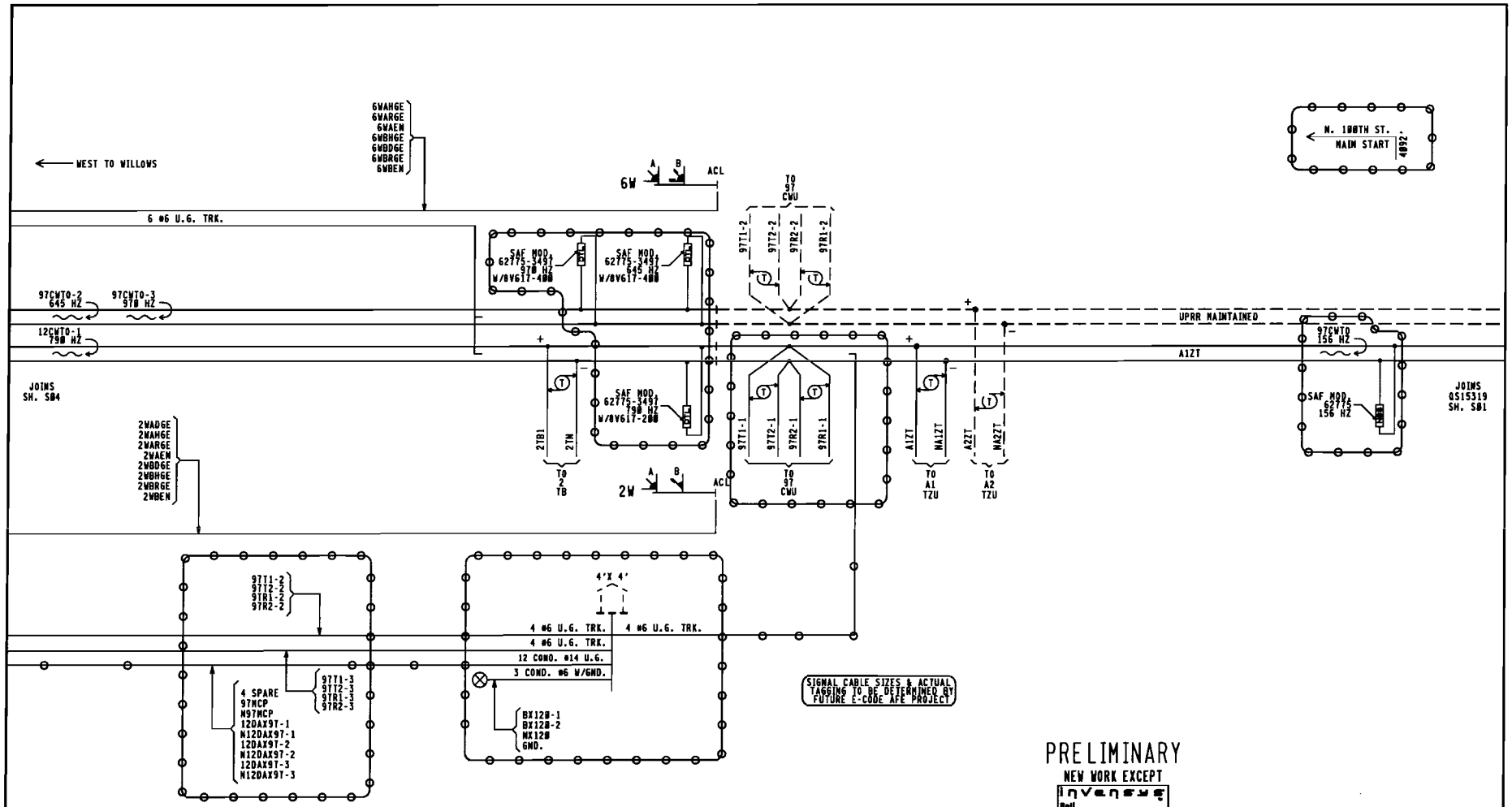

PRELIMINARY

NEW WORK EXCEPT

PROJECT #: IL2009033
DESIGNED BY: S. SPENCE
CHECKED BY: E. NORNE
DATE: 11-17-10

= NOTE
= EXISTING

CSX TRANSPORTATION
RAIL TRANSPORT GROUP ENGINEERING
COMMUNICATIONS AND SIGNALS

C.P. EAST ST. ELMO

SIG. 2W & 6W
TRACK AND SIGNAL PLAN
ALTAMONT, IL M.P. QS-154.40

DESIGNED	DIGITIZED	CHECKED	DATE
IRC/SWS	IRC/SWS	IRC/EJH	11-17-10

DESIGN DATE	REV. NO.	DRAWING	SHEET NO	FILE	SHEET
11-17-10	1	8406-1544	2E	QS15440	S05

Minimum Program Steps Report

Location and SIN

DOT Number: 015432X
Milepost Number: QS-154.32
Site Name: REMOTE @ SIG 2E 4E

SIN: 7125462000416 *

* Parameter is part of office check number calculation.

MCF and Template Selection

MCF Name: GCP-T6X-02-1.mcf
MCF Revision: 021
MCFCRC: 607GE435

Template = 4A.6 Remotes *

* Parameter is part of office check number calculation.

Minimum Program Steps

TEMPLATE: module configuration
Track 2/RIO 1 Slot = Track *
Track 3 Slot = Track *

TEMPLATE: track 1-Remote Dax
Track 1 : GCP Frequency = 156 Hz
Track 1 : Approach Distance = 3117 ft
Track 1 : Dax A Warning Time = 39 sec
Track 1 : Dax A Offset Distance = 975 ft
Track 1 : GCP Transmit Level = High

TEMPLATE: track 2-Remote Dax
Track 2 : GCP Frequency = 340 Hz
Track 2 : Approach Distance = 1030 ft
Track 2 : Dax A Warning Time = 39 sec
Track 2 : Dax A Offset Distance = 975 ft
Track 2 : GCP Transmit Level = High

TEMPLATE: track 3-Remote Dax
Track 3 : GCP Frequency = 340 Hz
Track 3 : Approach Distance = 1030 ft
Track 3 : Dax A Warning Time = 39 sec
Track 3 : Dax A Offset Distance = 975 ft
Track 3 : GCP Transmit Level = Medium (Set in Field)

TEMPLATE: SSCC
Gates Used = No *
SSCC 1 : Lamp Neutral Test = Off (Set in Field)

TEMPLATE: OOS
OOS Control = Display OOS IPs *
T2 OOS Control = OOS Input 1 *
T3 OOS Control = OOS Input 1 *

TEMPLATE: OP assignment 1
OUT 1.1 = T1 Dax A *
OUT 2.1 = T2 Dax A *
OUT 3.1 = T3 Dax A *

TEMPLATE: IP assignment SSCC
IN 7.2 = Out Of Service IP 1 *
IN 7.4 = Not Used *
IN 7.5 = Not Used *

BASIC: module configuration
SSCC-1 Slot = SSCC31 *
SEAR Used = Yes *

GCP: track 1 enhanced det
Track 1 : Inbound PS Sensitivity = Off *
Track 1 : Trailing Switch Logic = Off *

GCP: track 2 enhanced det
Track 2 : Inbound PS Sensitivity = Off *
Track 2 : Trailing Switch Logic = Off *

GCP: track 3 enhanced det
Track 3 : Inbound PS Sensitivity = Off *
Track 3 : Trailing Switch Logic = Off *

ADVANCED: site options
Daylight Savings = On *

SEAR
DI 1 = Gnd Flt Tester 1 *
Rly 1 = Ground Fault Test *
Rly 2 = AC Control *

SEAR: slot 7-8 inputs
IN 7.3 = POK 2 *

* Parameter is part of office check number calculation.

Check Numbers

Office Check No. (DT 4.6.0): 7A6D129E
Office Check Number: 7A6D129E
Config. Check Number: 3A75080F
(Based on MCF Revision 021)

Parameters not part of office check number calculation.

Track 1 : GCP Frequency = 156 Hz
Track 1 : Approach Distance = 3117 ft
Track 1 : Dax A Warning Time = 39 sec
Track 1 : Dax A Offset Distance = 975 ft
Track 1 : GCP Transmit Level = High
Track 2 : GCP Frequency = 340 Hz
Track 2 : Approach Distance = 1030 ft
Track 2 : Dax A Warning Time = 39 sec
Track 2 : Dax A Offset Distance = 975 ft
Track 2 : GCP Transmit Level = High
Track 3 : GCP Frequency = 340 Hz
Track 3 : Approach Distance = 1030 ft
Track 3 : Dax A Warning Time = 39 sec
Track 3 : Dax A Offset Distance = 975 ft
Track 3 : GCP Transmit Level = Medium (Set in Field)
SSCC 1 : Lamp Neutral Test = Off (Set in Field)

PRELIMINARY
NEW WORK

Invensys Rail

PROJECT #: IL2009033
DESIGNED BY: S. SPENCE
CHECKED BY: E. HORNE
DATE: 11-17-10

CSX TRANSPORTATION
RAIL TRANSPORT GROUP ENGINEERING
COMMUNICATIONS AND SIGNALS

C.P. EAST ST. ELMO

REMOTE HOUSE SIG. 2E, 4E, & 6E
MINIMUM PROGRAM STEPS REPORT CWE-32
ALTAMONT, IL N.P. QS-154.40

DESIGNED	DIGITIZED	CHECKED	DATE
IRC/SWS	IRC/SWS	IRC/EJH	11-17-10

DESIGN DATE	REV. NO.	DRAWING	SHEET NO	FILE	SHEET
11-17-10	1	0406-1544	64	QS1544B	P01

Minimum Program Steps Report

Location and SIN

DOT Number: 507896H
Milepost Number: QS-154.12
Site Name: N 100TH ST (TR-4)

SIN: 712546200216 *

* Parameter is part of office check number calculation.

MCF and Template Selection

MCF Name: GCP-T6X-02-1.mcf
MCF Revision: 021
MCFCRC: 6076E435

Template = 1A.6 Trk Bi *

* Parameter is part of office check number calculation.

Minimum Program Steps

TEMPLATE: module configuration
Track 2/RIO 1 Slot = Track *
Track 3 Slot = Track *
Track 5/RIO 2 Slot = RIO *
SSCC 1 Slot = Not Used *

TEMPLATE: track 1-Bi, Island
Track 1 : GCP Frequency = 790 Hz
Track 1 : Approach Distance = 957 ft
Track 1 : Prime Warning Time = 39 sec
Track 1 : Prime UAX = IP *
Track 1 : GCP Transmit Level = Medium (Set in Field)
Track 1 : Isl Frequency = 10.0 kHz

TEMPLATE: track 2-Bi, Island
Track 2 : GCP Frequency = 790 Hz
Track 2 : Approach Distance = 957 ft
Track 2 : Prime Warning Time = 39 sec
Track 2 : Prime UAX = IP *
Track 2 : GCP Transmit Level = Medium (Set in Field)
Track 2 : Isl Frequency = 4.9 kHz

TEMPLATE: track 3-Bi, Island
Track 3 : GCP Frequency = 790 Hz
Track 3 : Approach Distance = 957 ft
Track 3 : Prime Warning Time = 39 sec
Track 3 : Prime UAX = IP *
Track 3 : GCP Transmit Level = Medium (Set in Field)
Track 3 : Isl Frequency = 8.3 kHz

TEMPLATE: AND 1 XR
AND 1 Enable Used = Yes *
And 1 Enable Pickup = 0 sec *

TEMPLATE: SSCC
SSCC-2 Number of GPs = 1 *
SSCC-2 Number of GDs = 1 *
SSCC 2 : Lamp Neutral Test = Off (Set in Field)

TEMPLATE: OOS
OOS Control = Display+OOS IPs *
T2 OOS Control = OOS Input 1 *
T3 OOS Control = OOS Input 1 *

TEMPLATE: OP assignment 1
OUT 1.1 = AND 1 XR *

TEMPLATE: OP assignment 2
OUT 5.1 = T1 Prime *

TEMPLATE: IP assignment 1
IN 1.1 = T1 Prime UAX *
IN 1.2 = T1 Prime UAX *
IN 2.1 = T2 Prime UAX *
IN 2.2 = T2 Prime UAX *
IN 3.1 = T3 Prime UAX *
IN 3.2 = T3 Prime UAX *

TEMPLATE: IP assignment 2
IN 5.1 = AND 1 XR Enable *

TEMPLATE: IP assignment SSCC
IN 8.2 = Out Of Service IP 1 *
IN 8.4 = GD 2.1 *
IN 8.5 = GP 2.1 *

GCP: track 1 enhanced det
Track 1 : Inbound PS Sensitivity = Off *

GCP: track 2
Track 2 : Island Distance = 120 ft *

GCP: track 2 enhanced det
Track 2 : Inbound PS Sensitivity = Off *

GCP: track 3
Track 3 : Island Distance = 120 ft *

GCP: track 3 enhanced det
Track 3 : Inbound PS Sensitivity = Off *

ADVANCED: site options
Daylight Savings = On *

SSCC: 2
SSCC-2 Gate Delay = 5 sec *
SSCC 2 : Flash Rate = 55 *

SEAR
DI 1 = Gnd Flt Tester 1 *
DI 2 = Gnd Flt Tester 2 *
Rly 1 = Ground Fault Test *
Rly 2 = AC Control *

SEAR: slot 7-8 inputs
IN 8.1 = TSS 2 *
IN 8.3 = POK 2 *

* Parameter is part of office check number calculation.

Check Numbers

Office Check No. (DT 4.6.0): 43C7B95D
Office Check Number: 43C7B95D
Config. Check Number: 3780AF63
(Based on MCF Revision 021)

Parameters not part of office check number calculation:

Track 1 : GCP Frequency = 790 Hz
Track 1 : Approach Distance = 957 ft
Track 1 : Prime Warning Time = 39 sec
Track 1 : GCP Transmit Level = Medium (Set in Field)
Track 1 : Isl Frequency = 10.0 kHz
Track 2 : GCP Frequency = 790 Hz
Track 2 : Approach Distance = 957 ft
Track 2 : Prime Warning Time = 39 sec
Track 2 : GCP Transmit Level = Medium (Set in Field)
Track 2 : Isl Frequency = 4.9 kHz
Track 3 : GCP Frequency = 790 Hz
Track 3 : Approach Distance = 957 ft
Track 3 : Prime Warning Time = 39 sec
Track 3 : GCP Transmit Level = Medium (Set in Field)
Track 3 : Isl Frequency = 8.3 kHz
SSCC 2 : Lamp Neutral Test = Off (Set in Field)

PRELIMINARY

NEW WORK

Invensys Rail

PROJECT #: IL2000833
DESIGNED BY: S. SPENCE
CHECKED BY: E. HORNE
DATE: 11-17-10

CSX TRANSPORTATION
RAIL TRANSPORT GROUP ENGINEERING
COMMUNICATIONS AND SIGNALS

C.P. EAST ST. ELMO

N. 100TH ST. 507896H
MINIMUM PROGRAM STEPS REPORT CWE-12
ALTAMONT, IL M.P. QS-154.40

DESIGNED	DIGITIZED	CHECKED	DATE
IRC/SWS	IRC/SWS	IRC/EJH	11-17-10

DESIGN DATE	REV. NO.	DRAWING	SHEET NO	FILE	SHEET
11-17-10	1	8406-1544	65	QS15440	P02

Minimum Program Steps Report

Location and SIN

DOT Number: 015397X
Milepost Number: QS-153.97
Site Name: REMOTE @ SIG 2W

SIN: 712546200316 *

* Parameter is part of office check number calculation.

MCF and Template Selection

MCF Name: GCP-T6X-02-1.mcf
MCF Revision: 021
MCFCRC: 607GE435

Template = 4A:6 Remotes *

* Parameter is part of office check number calculation.

Minimum Program Steps

TEMPLATE: module configuration
Track 2/RIO 1 Slot = Track *
Track 3 Slot = Track *

TEMPLATE: track 1-Remote Dax
Track 1 : GCP Frequency = 156 Hz
Track 1 : Approach Distance = 3353 ft
Track 1 : Dax A Warning Time = 39 sec
Track 1 : Dax A Offset Distance = 740 ft
Track 1 : GCP Transmit Level = High

TEMPLATE: track 2-Remote Dax
Track 2 : GCP Frequency = 790 Hz
Track 2 : Approach Distance = 400 ft
Track 2 : Dax A Offset Distance = 99 ft (Verify in Field)
Track 2 : GCP Transmit Level = Medium (Set in Field)

TEMPLATE: track 3-Remote Dax
Track 3 : GCP Frequency = 645 Hz
Track 3 : Approach Distance = 400 ft
Track 3 : Dax A Offset Distance = 740 ft
Track 3 : GCP Transmit Level = Medium (Set in Field)

TEMPLATE: SSCC
Gates Used = No *
SSCC 1 : Lamp Neutral Test = Off (Set in Field)

TEMPLATE: OOS
OOS Control = Display+OOS IPs *
T2 OOS Control = OOS Input 1 *
T3 OOS Control = OOS Input 1 *

TEMPLATE: OP assignment 1
OUT 1.1 = T1 Dax A *
OUT 2.1 = T2 Dax A *
OUT 3.1 = T3 Dax A *

TEMPLATE: IP assignment SSCC
IN 7.2 = Out Of Service IP 1 *
IN 7.4 = Not Used *
IN 7.5 = Not Used *

BASIC: module configuration
SSCC-1 Slot = SSCC31 *
SEAR Used = Yes *

GCP: track 1 enhanced det
Track 1 : Inbound PS Sensitivity = Off *
Track 1 : Trailing Switch Logic = Off *

GCP: track 2 enhanced det
Track 2 : Inbound PS Sensitivity = Off *
Track 2 : Trailing Switch Logic = Off *

GCP: track 2 Dax A
Track 2 : Dax A MS/GCP Mode = MS *

GCP: track 3 enhanced det
Track 3 : Inbound PS Sensitivity = Off *
Track 3 : Trailing Switch Logic = Off *

GCP: track 3 Dax A
Track 3 : Dax A MS/GCP Mode = MS *

ADVANCED: site options
Daylight Savings = On *

SEAR
DT 1 = Gnd Flt Tester 1 *
Rly 1 = Ground Fault Test *
Rly 2 = AC Control *

SEAR: slot 7-8 inputs
IN 7.3 = POK 2 *

* Parameter is part of office check number calculation.

Check Numbers

Office Check No. (DT 4.6.0): 58FC0926
Office Check Number: 58FC0926
Config. Check Number: 12711205
(Based on MCF Revision 021)

Parameters not part of office check number calculation:

Track 1 : GCP Frequency = 156 Hz
Track 1 : Approach Distance = 3353 ft
Track 1 : Dax A Warning Time = 39 sec
Track 1 : Dax A Offset Distance = 740 ft
Track 1 : GCP Transmit Level = High
Track 2 : GCP Frequency = 790 Hz
Track 2 : Approach Distance = 400 ft
Track 2 : Dax A Offset Distance = 99 ft (Verify in Field)
Track 2 : GCP Transmit Level = Medium (Set in Field)
Track 3 : GCP Frequency = 645 Hz
Track 3 : Approach Distance = 400 ft
Track 3 : Dax A Offset Distance = 740 ft
Track 3 : GCP Transmit Level = Medium (Set in Field)
SSCC 1 : Lamp Neutral Test = Off (Set in Field)

PRELIMINARY
NEW WORK

PROJECT #: IL2009033
DESIGNED BY: S. SPENCE
CHECKED BY: E. HORNE
DATE: 11-17-10

CSX TRANSPORTATION
RAIL TRANSPORT GROUP ENGINEERING
COMMUNICATIONS AND SIGNALS

C.P. EAST ST. ELMO
SIGNALS 2W & 6W
MINIMUM PROGRAM STEPS REPORT CWE-97
ALTAMONT, IL M.P. QS-154.40

DESIGNED	DIGITIZED	CHECKED	DATE
IRC/SWS	IRC/SWS	IRC/EJN	11-17-10

DESIGN DATE	REV. NO.	DRAWING	SHEET NO	FILE	SHEET
11-17-10	1	8406-1544	66	QS1544B	P03

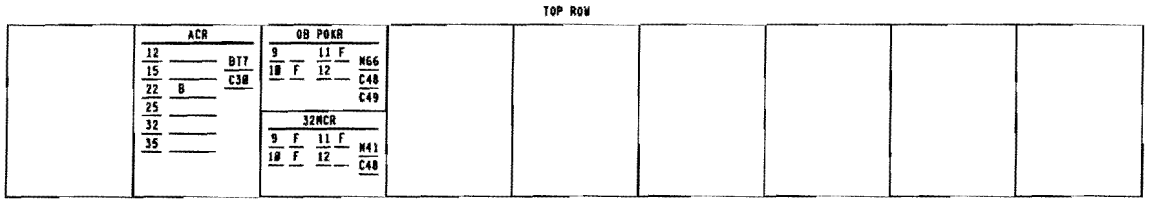

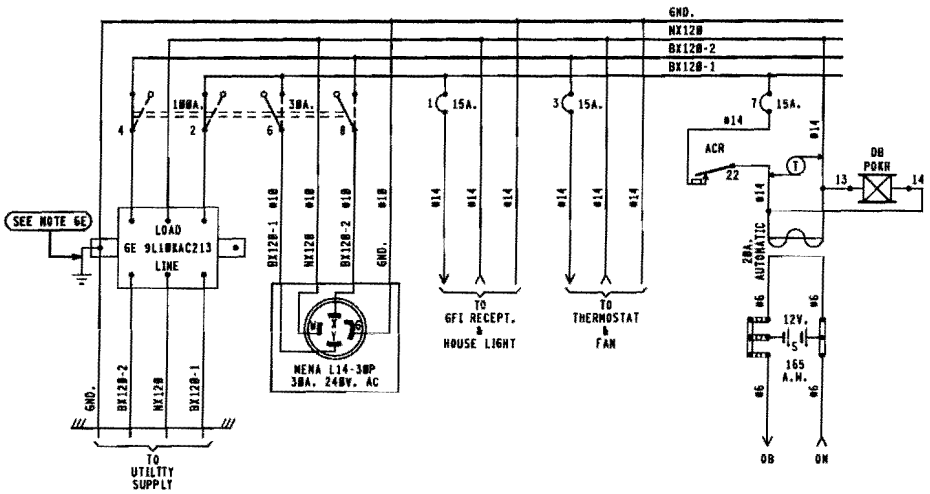

BX120-1	BX120-2
8.0 AMPS	2.0 AMPS

MAXIMUM LOAD CALCULATED PER SS360

NOTES.

1 - REFERENCES ARE PER SCMS-13.
2 - ARRESTERS ARE PER SS302.
3 - SHELF RELAY PLACEMENT ON CONSIST CHART HAS NO SIGNIFICANCE.
4 - PLUG-IN RELAYS ARE VIEWED FROM THE FRONT OF RACK.
5 - BATTERY A.H. CAPACITY SHOWN IS THE MINIMUM REQUIREMENT.
6 - WIRING
  A - FEED TO ALL BUSSES, LIGHT CIRCUITS, MOTOR CIRCUITS TO BE #10 FLEX.
  B - 120-VOLT FEED FROM ENTRANCE TO POWER BUSS TO BE #10 FLEX.
  C - ALL TRACK WIRES TO BE #10 FLEX.
  D - ALL OTHERS TO BE #16 FLEX UNLESS NOTED.
  E - GROUND WIRE NOT NECESSARY WHEN 6E ARRESTER IS MOUNTED ON GROUND PLANE OR METAL ENCLOSURE AFFIXED DIRECTLY TO BUNGALOW METALLIC STRUCTURAL MEMBER.
7 - CIRCUIT INTERRUPTERS 2 & 4 ARE MECHANICALLY INTERLOCKED WITH CIRCUIT INTERRUPTERS 6 & 8.

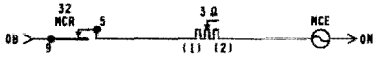

PRELIMINARY

NEW WORK

PROJECT #. IL2009033
DESIGNED BY. S. SPENCE
CHECKED BY. E. HORNE
DATE. 11-17-10

= NOTE

4'X 4' RELAY HOUSE W/FARADAY SHIELD

CSX TRANSPORTATION
RAIL TRANSPORT GROUP ENGINEERING
COMMUNICATIONS AND SIGNALS

C.P. EAST ST. ELMO

REMOTE HOUSE SIG. 2E, 4E & 6E
POWER DISTRIBUTION CWE-32
ALTAMONT, IL M.P. QS-154.40

DESIGNED	DIGITIZED	CHECKED	DATE
IRC/SWS	IRC/SWS	IRC/EJH	11-17-10

DESIGN DATE	REV. NO.	DRAWING	SHEET NO	FILE	SHEET
11-17-10	1	8486-1544	61	QS15440	E01

TOP ROW

ACR	X-B POKR	12MCR	32MCPR	CSXXR	UPDAXPR	CSXBGOR	UPAGDPR	CSXBGR	UPAGPR
12 B — BTT C30	9 — 11 F — N66 C40 C49	9 F — 11 — N41 C40 C49	9 F — 11 — N41 C40 C49	12 — B8 C30	12 * — B0 C30	12 — B8 C30	12 — B8 C30	12 — B8 C30	12 — B8 C30
15	10 F — 12 —	10 — 12 —	10 — 12 —	15	15	15	15	15	15
22 B	0B POKR	B-G POKR	9TMCPR	22	22	22	22	22	22
25	9 — 11 F — N66 C40	9 F 11 F — N66 C40	9 F — 11 — N41 C40 C49	23 F	23 F	23 F	23 F	23 F	23 F
32 B	10 F — 12 —	10 F — 12 —	10 — 12 —	25 F	25	25 F	25	25 F	25
35				32	32	32	32	32	32
				35	35	35	35	35	35

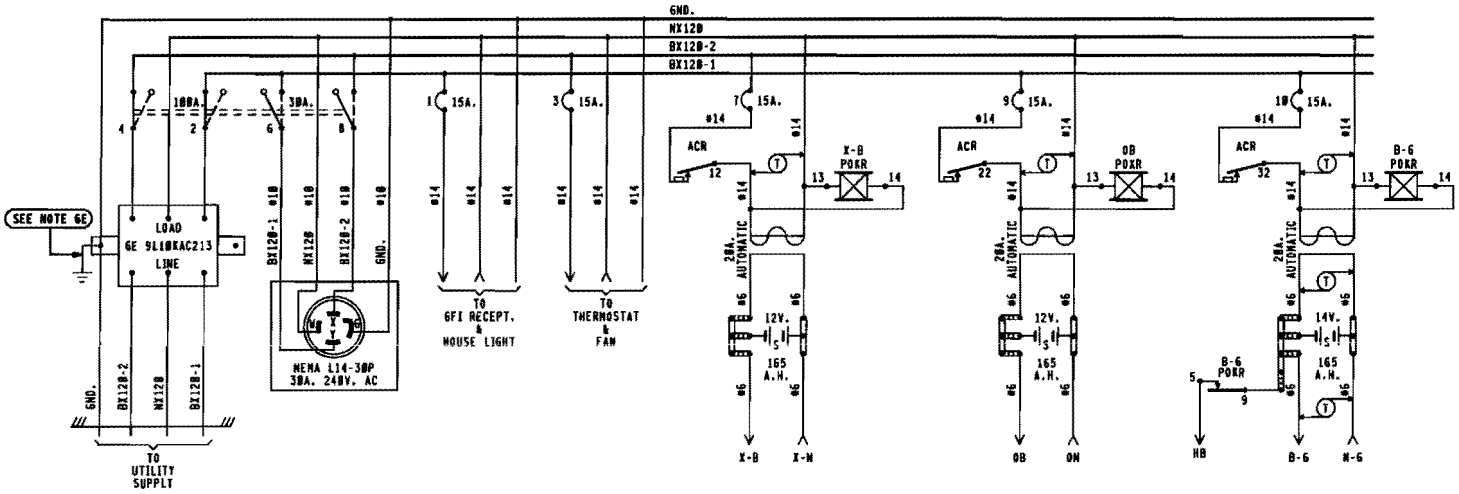

BX120-1	BX120-2
16.0 AMPS	8.0 AMPS

MAXIMUM LOAD CALCULATED PER SS360

NOTES.

1 - REFERENCES ARE PER SCMS-13.
2 - ARRESTERS ARE PER SS382.
3 - SHELF RELAY PLACEMENT ON CONSIST CHART HAS NO SIGNIFICANCE.
4 - PLUG-IN RELAYS ARE VIEWED FROM THE FRONT OF RACK.
5 - BATTERY A.H. CAPACITY SHOWN IS THE MINIMUM REQUIREMENT.
6 - WIRING
  A - FEED TO ALL BUSSES, LIGHT CIRCUITS, MOTOR CIRCUITS TO BE #10 FLEX.
  B - 120-VOLT FEED FROM ENTRANCE TO POWER BUSS TO BE #10 FLEX.
  C - ALL TRACK WIRES TO BE #10 FLEX.
  D - ALL OTHERS TO BE #16 FLEX UNLESS NOTED.
  E - GROUND WIRE NOT NECESSARY WHEN GE ARRESTER IS MOUNTED ON GROUND PLANE OR METAL ENCLOSURE AFFIXED DIRECTLY TO BUNGALOW METALLIC STRUCTURAL MEMBER.
7 - CIRCUIT INTERRUPTERS 2 & 4 ARE MECHANICALLY INTERLOCKED WITH CIRCUIT INTERRUPTERS 6 & 8.

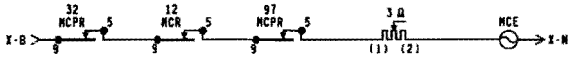

PRELIMINARY
NEW WORK

Invensys Rail

PROJECT #. JL2009033
DESIGNED BY. S. SPENCE
CHECKED BY. E. HORNE
DATE. 11-17-10

= NOTE

6'X 6' RELAY HOUSE W/FARADAY SHIELD

CSX TRANSPORTATION
RAIL TRANSPORT GROUP ENGINEERING
COMMUNICATIONS AND SIGNALS

C.P. EAST ST. ELMO
N. 100TH ST. 507896H
POWER DISTRIBUTION CWE-12
ALTAMONT, IL M.P. QS-154.40

DESIGNED	DIGITIZED	CHECKED	DATE
IRC/SWS	IRC/SWS	IRC/EJR	11-17-10

DESIGN DATE	REV. NO.	DRAWING	SHEET NO	FILE	SHEET
11-17-10	1	B406-1544	62	QS1544B	E02

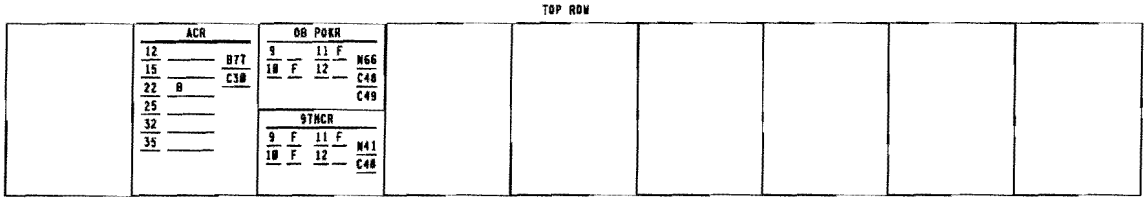

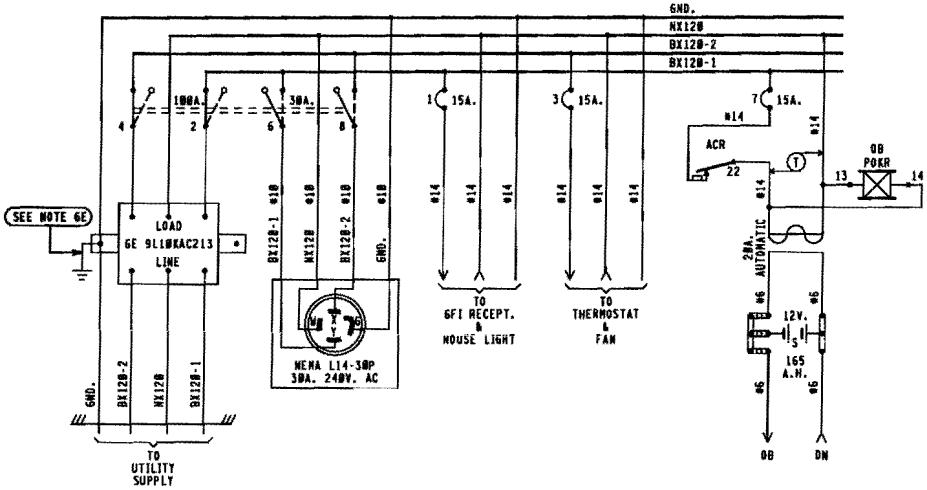

BX120-1	BX120-2
8.0 AMPS	2.0 AMPS

MAXIMUM LOAD CALCULATED PER SS360

NOTES:

1 - REFERENCES ARE PER SCMS-13.
2 - ARRESTERS ARE PER SS382.
3 - SHELF RELAY PLACEMENT ON CONSIST CHART HAS NO SIGNIFICANCE.
4 - PLUG-IN RELAYS ARE VIEWED FROM THE FRONT OF RACK.
5 - BATTERY A.H. CAPACITY SHOWN IS THE MINIMUM REQUIREMENT.
6 - WIRING
  A - FEED TO ALL BUSSES, LIGHT CIRCUITS, MOTOR CIRCUITS TO BE #10 FLEX.
  B - 120-VOLT FEED FROM ENTRANCE TO POWER BUSS TO BE #10 FLEX.
  C - ALL TRACK WIRES TO BE #10 FLEX.
  D - ALL OTHERS TO BE #16 FLEX UNLESS NOTED.
  E - GROUND WIRE NOT NECESSARY WHEN GE ARRESTER IS MOUNTED ON GROUND PLANE OR METAL ENCLOSURE AFFIXED DIRECTLY TO BUNGALOW METALLIC STRUCTURAL MEMBER.
7 - CIRCUIT INTERRUPTERS 2 & 4 ARE MECHANICALLY INTERLOCKED WITH CIRCUIT INTERRUPTERS 6 & 8.

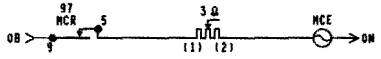

PRELIMINARY

NEW WORK

Invensys Rail

PROJECT #: IL2089833
DESIGNED BY: S. SPENCE
CHECKED BY: E. HORNE
DATE: 11-17-10

= NOTE

4'X 4' RELAY HOUSE W/FARADAY SHIELD

CSX TRANSPORTATION

RAIL TRANSPORT GROUP ENGINEERING
COMMUNICATIONS AND SIGNALS

C.P. EAST ST. ELMO

REMOTE HOUSE SIG. 2W & 6W
POWER DISTRIBUTION CWE-97
ALTAMONT, IL M.P. DS-154.40

DESIGNED	DIGITIZED	CHECKED	DATE
IRC/SWS	IRC/SWS	IRC/EJH	11-17-10

DESIGN DATE	REV. NO.	DRAWING	SHEET NO	FILE	SHEET
11-17-10	1	8486-1544	63	DS15440	E03

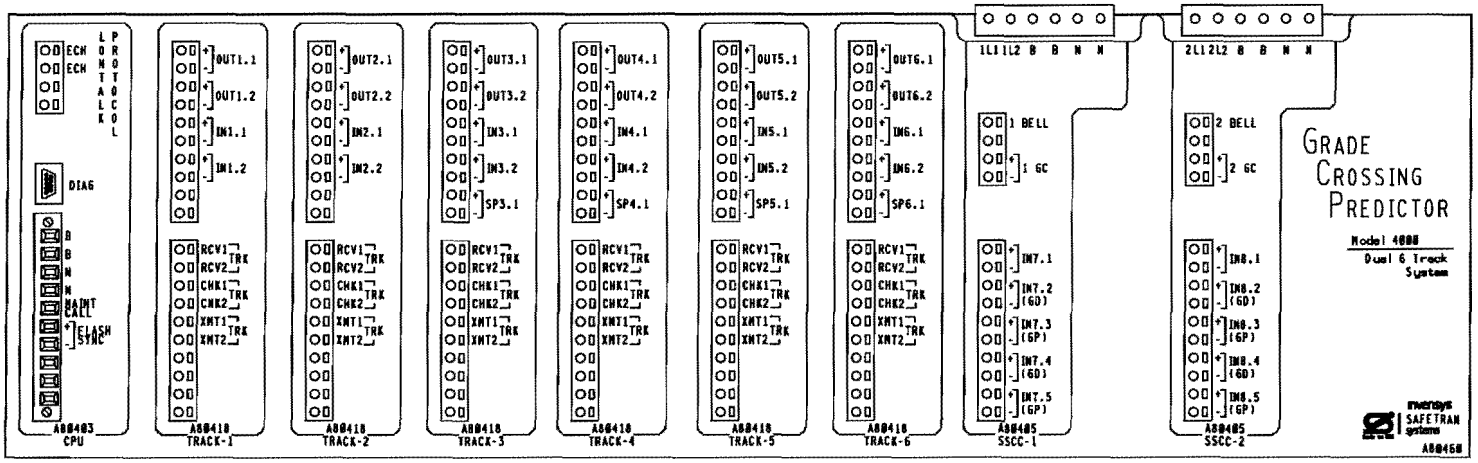

PRELIMINARY

NEW WORK

invensys Rail

PROJECT #: IL2009033
DESIGNED BY: S. SPENCE
CHECKED BY: E. HORNE
DATE: 11-17-10

CSX TRANSPORTATION

RAIL TRANSPORT GROUP ENGINEERING
COMMUNICATIONS AND SIGNALS

C.P. EAST ST. ELMO

REMOTE HOUSE SIG 2E, 4E, & 6E
DETECTION DEVICE CONSIST CWE-32
ALTAMONT, IL M.P. QS-154.40

DESIGNED	DIGITIZED	CHECKED	DATE
IRC/SWS	IRC/SWS	IRC/EJW	11-17-10

DESIGN DATE	REV. NO.	DRAWING	SHEET NO	FILE	SHEET
11-17-10	1	8486-1544	67	QS15440	C01

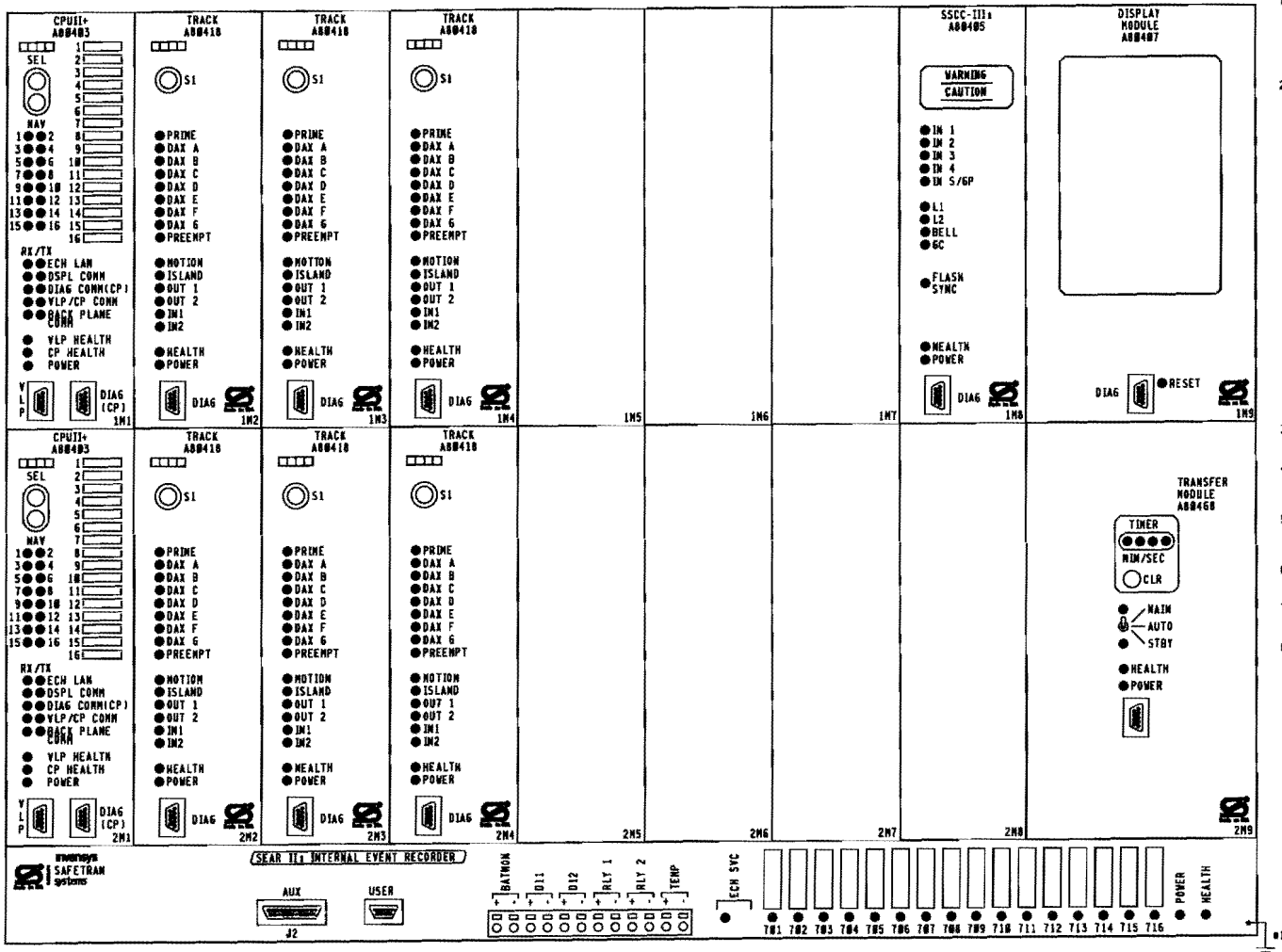

GCP 4000 APPLICATION NOTES:

1. THE GRADE CROSSING PREDICTOR (GCP) IS A MODULAR MICROPROCESSOR CONTROLLED SYSTEM THAT IS DEPLOYED TO CONTINUALLY MONITOR THE APPROACHES TO RAILROAD GRADE CROSSINGS AND TO CONTROL THE LAMPS, GATES AND BELLS ASSOCIATED WITH THOSE CROSSINGS. WHEN EQUIPPED WITH THE SEAR II: MODULE THE GCP 4000 WILL RECORD EVENTS AND REPORT ALARMS WHEN CONNECTED TO AN OFFICE SYSTEM.

2. THE GCP 4000 GCP (A8B460) IS A SIX TRACK REDUNDANT UNIT CAPABLE OF DRIVING 4 INDEPENDENT FLASHER AND GATE SIGNALS AND RECORDING EVENTS AND REPORTING ALARMS. THIS A8B460 INCLUDES THE FOLLOWING MODULES.

SLOT	MODULE	FUNCTION	PART NO.
1M1	CPU-II+	MAIN	A8B403
1M2	TRACK-1	MAIN	A8B418
1M3	TRACK-2	MAIN	A8B418
1M4	TRACK-3	NONE	A8B418
1M5	PANEL	NONE	D39325
1M6	PANEL	NONE	D39325
1M7	PANEL	NONE	D39325
1M8	SSCC-III:	OSS	A8B405
1M9	DISPLAY MODULE		A8B407
2M1	CPU-II+	STANDBY	A8B403
2M2	TRACK-1	STANDBY	A8B418
2M3	TRACK-2	STANDBY	A8B418
2M4	TRACK-3	STANDBY	A8B418
2M5	PANEL	NONE	D39325
2M6	PANEL	NONE	D39325
2M7	PANEL	NONE	D39325
2M8	PANEL	NONE	D39325
2M9	TRANSFER UNIT	NONE	A8B406
LOWER BAY	SEAR II:	RECORDER	A8B410

3. EACH TRACK MODULE HAS TWO PROGRAMMABLE INPUTS AND TWO PROGRAMABLE OUTPUTS.

4. THE SEAR II: INTERNAL EVENT RECORDER HAS INPUTS FOR ONE BATTERY MONITOR, TWO NON-VITAL INPUTS AND TWO PROGRAMMABLE RELAY DRIVES (HEEL/FRONT).

5. LOCATED ON THE FRONT OF EACH MODULE THERE ARE LED LIGHTS TO INDICATE THE ACTIVITY OF CERTAIN FUNCTIONS OCCURRING INSIDE THE GCP.

6. BETWEEN SLOT 1 & 2 THERE IS A CHASSIS IDENTIFICATION CHIP (CIC) SOCKET AND AN ECD CONNECTOR (DB-25 FEMALE).

7. UPON THE FAILURE OF A MODULE IN SLOTS 1M1-1M7 THE AUTOMATIC TRANSFER UNIT SWITCHES TO THE STANDBY MODULES IN SLOTS 2M1-2M7.

8. THE GCP 4000 GCP (A8B460) MAY USE RIO MODULES IN SLOTS 1M3, 1M6, 1M7, 2M3, 2M6 AND 2M7.

PRELIMINARY

NEW WORK

invensys Rail

PROJECT #: IL2009033
DESIGNED BY: S. SPENCE
CHECKED BY: E. HORNE
DATE: 11-17-10

CSX TRANSPORTATION

RAIL TRANSPORT GROUP ENGINEERING
COMMUNICATIONS AND SIGNALS

C.P. EAST ST. ELMO

REMOTE HOUSE SIG 2E, 4E, & 6E
DETECTION CIRCUITRY CWE-32
ALTAMONT, IL M.P. QS-154.40

DESIGNED	DIGITIZED	CHECKED	DATE
IRC/SWS	IRC/SWS	IRC/EJH	11-17-10

DESIGN DATE	REV. NO.	DRAWING	SHEET NO	FILE	SHEET
11-17-10	1	8406-1544	68	QS1544B	C#2

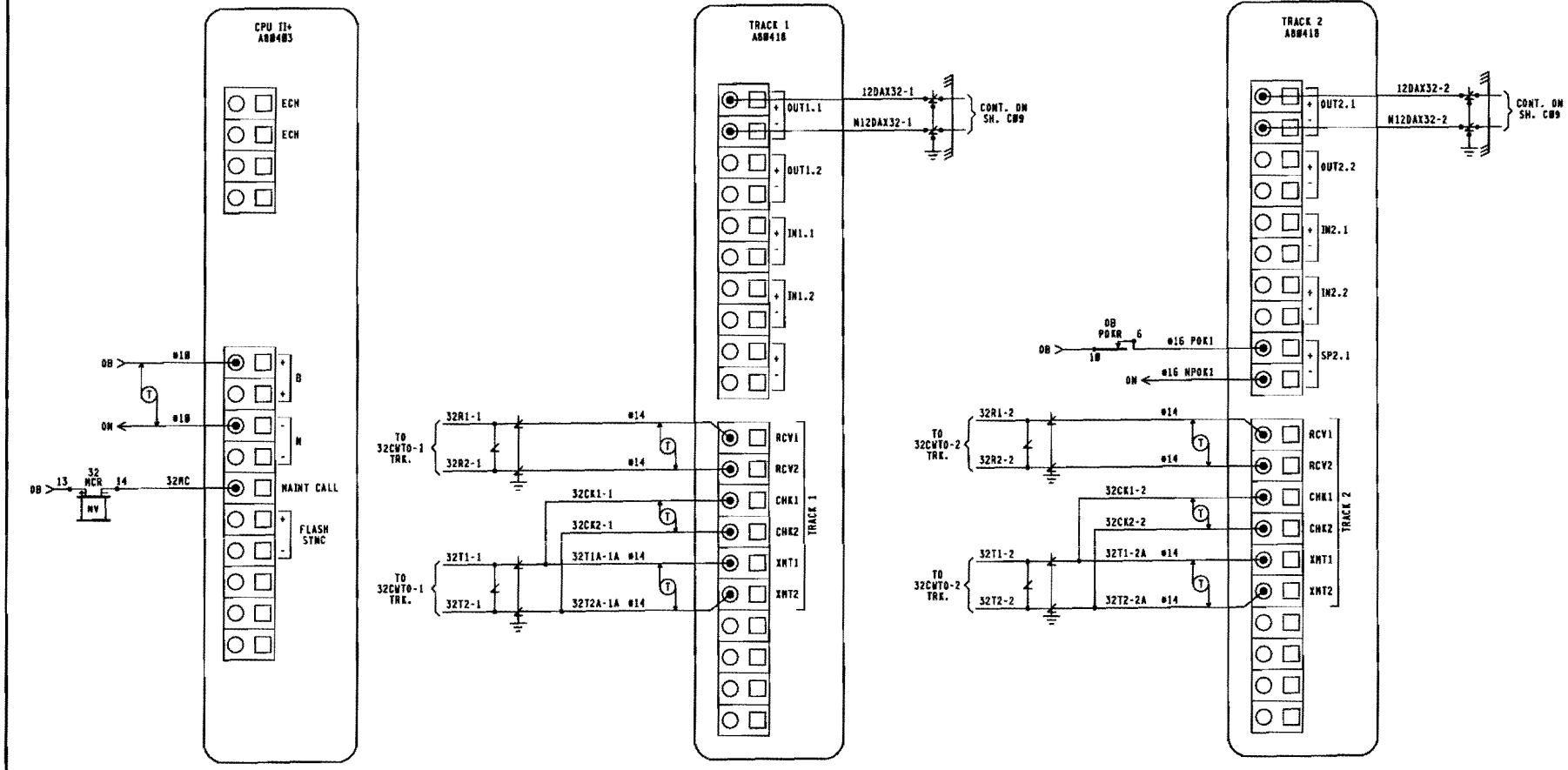

PRELIMINARY

NEW WORK

Invensys
Rail

PROJECT #: IL2#49033
DESIGNED BY: S. SPENCE
CHECKED BY: E. NORNE
DATE: 11-17-1#

CSX TRANSPORTATION

RAIL TRANSPORT GROUP ENGINEERING
COMMUNICATIONS AND SIGNALS

C.P. EAST ST. ELMO

REMOTE HOUSE SIG 2E, 4E, & 6E
DETECTION CIRCUITRY CWE-32
ALTAMONT, IL M.P. QS-154.4#

DESIGNED	DIGITIZED	CHECKED	DATE
IRC/SWS	IRC/SWS	IRC/EJH	11-17-1#

DESIGN DATE	REV. NO.	DRAWING	SHEET NO	FILE	SHEET
11-17-1#	1	8406-1544	69	051544#	C#3

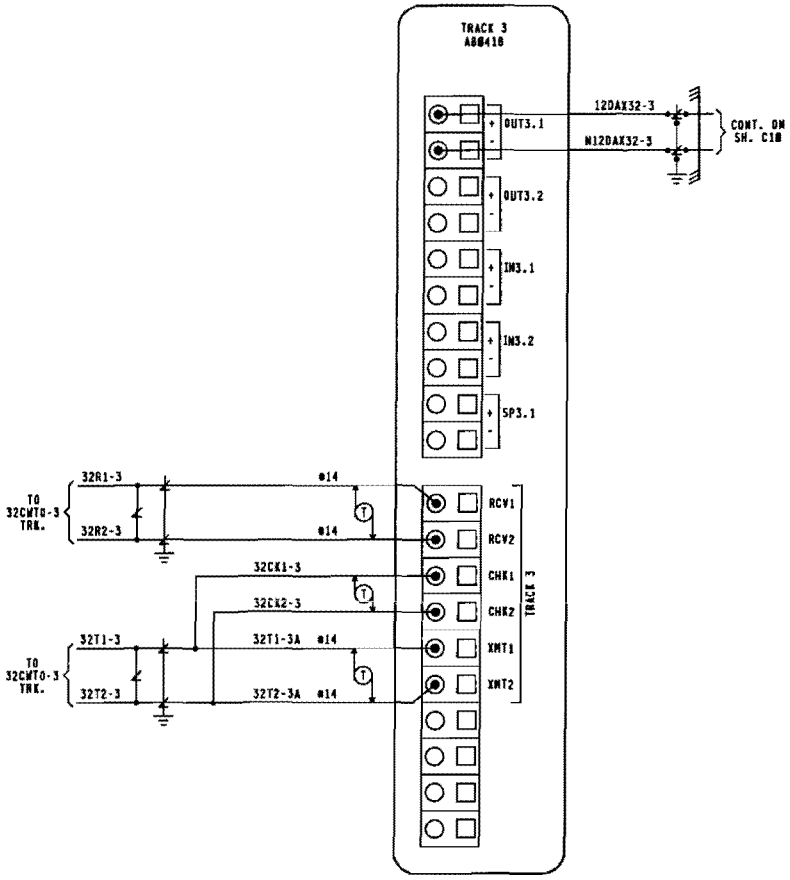

PRELIMINARY

NEW WORK

PROJECT #: JL2B09035
DESIGNED BY: S. SPENCE
CHECKED BY: E. HORNE
DATE: 11-17-10

CSX TRANSPORTATION
RAIL TRANSPORT GROUP ENGINEERING
COMMUNICATIONS AND SIGNALS

C.P. EAST ST. ELMO

REMOTE HOUSE S16 2E, 4E, & 6E
DETECTION CIRCUITRY CWE-32
ALTAMONT, IL M.P. QS-154.40

DESIGNED	DIGITIZED	CHECKED	DATE
IRC/SWS	IRC/SWS	IRC/EJW	11-17-10

DESIGN DATE	REV. NO.	DRAWING	SHEET NO	FILE	SHEET
11-17-10	1	8406-1544	70	Q515440	C04

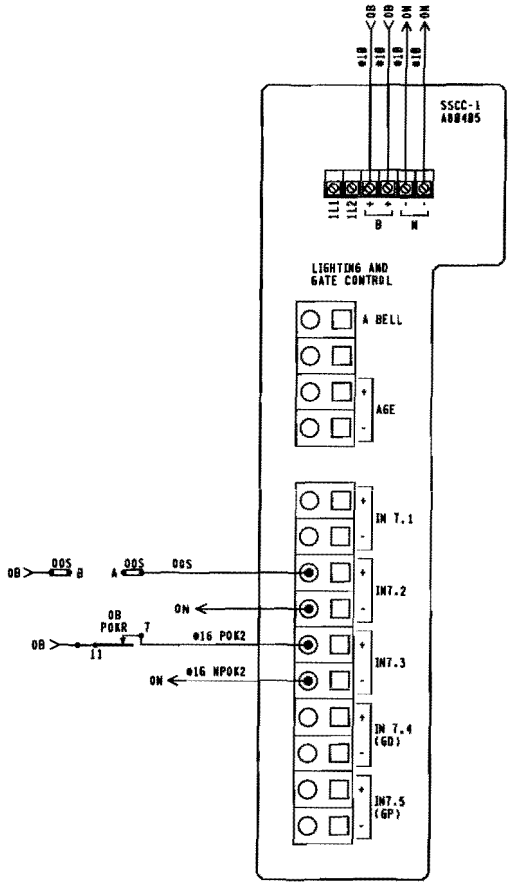

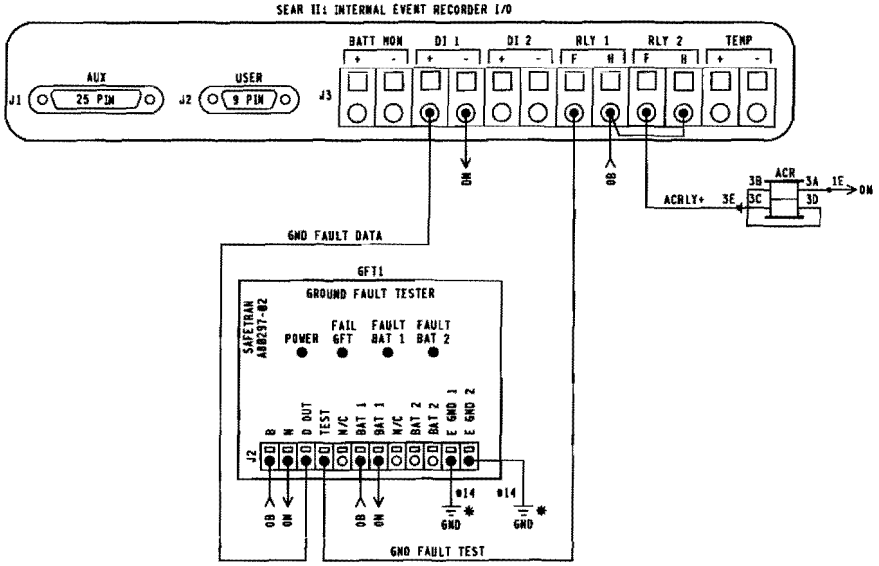

WARNING

BEFORE REMOVING A TRACK FROM SERVICE COMPLIANCE WITH TRAIN CONTROL JUMPER POLICY, TCR 1525-01, MUST BE ASSURED.

TO ENABLE THE REMOVAL OF A TRACK FROM SERVICE, APPLY A JUMPER CONNECTING OOS TERMINAL (A) TO OOS TERMINAL (B).

NOTES:

1. ALL WIRING #16 UNLESS NOTED OTHERWISE.
2. * = EARTH GROUND REF. TERMINALS REQUIRED FOR DETECTION. DO NOT JUMPER TERMINALS. MUST BE CONNECTED TO DIFFERENT POINTS OF BUNGALOW.

PRELIMINARY

NEW WORK

Invensys Rail

PROJECT #: IL2009033
DESIGNED BY: S. SPENCE
CHECKED BY: E. NORNE
DATE: 11-17-10

CSX TRANSPORTATION
RAIL TRANSPORT GROUP ENGINEERING
COMMUNICATIONS AND SIGNALS

C.P. EAST ST. ELMO

REMOTE HOUSE SIG 2E, 4E, & 6E
DETECTION CIRCUITRY CWE-32
ALTAMONT, IL M.P. 05-154.40

DESIGNED	DIGITIZED	CHECKED	DATE
IRC/SWS	IRC/SWS	IRC/EJN	11-17-10

DESIGN DATE	REV. NO.	DRAWING	SHEET NO	FILE	SHEET
11-17-10	1	0486-1544	T1	051544B	C05

DEFAULTS AND/OR STYLE		FIELD RECORD
SEAR II: EXECUTIVE PROGRAM	VERSION: 9V725A01	VERSION: _____
APPLICATION PROGRAM (IF LOADED)	VERSION: 9V864A01	VERSION: _____

NOTE TO INSPECTOR:
AT IN SERVICE OF SEAR II: OR UPDATE OF ITS INTERNAL EXECUTIVE PROGRAM OR ITS CSXT APPLICATION PROGRAM, NOTE THE VERSION NUMBER OF EACH PROGRAM MUST IN THE BLANK FIELDS.

SITE SET UP MENU

FUNCTION	LED DISPLAY
DATE/TIME	XX-XX-XXXX XX:XX:XX
AUTOMATIC DST ADJUSTMENT	YES
TIME ZONE	EASTERN
SITE NAME	REMOTE LOCATION
MILEPOST	QS-154.32
DOT NUMBER	815432X
TESTER TYPE	CROSSING
DATE FORMAT	MM-DD-YYYY
TEMP FORMAT	FAHRENHEIT
INDICATE HOLD (SEC)	0
INDICATE REFRESH (SEC)	60
SITE ATCS ADDRESS	7.125.462.004.99.01 (7.RRR.LLL.GGG.99.01)
SITE TYPE	COLLECTOR
OFFICE ADDRESS	2.125.00.0000 (2.RRR.NN.DDDD)
POLL ID	1
MODE	GEN/ATCS
WAMS XID	DISABLED
OFFICE COMM. DEVICE	■ WAG (ECHELON) ☐ DIRECT (RS232) ☐ MCM (ECHELON) ☐ MCM (RS232) ☐ DIAL MODEM ☐ S200 RADIO (RS422)
RADIO ATCS ADDR	7.125.497.028.07.01 (7.RRR.LLL.GGG.NN.01)
FIELD COMM. DEVICE	☐ WAG (ECHELON) ■ NONE ☐ VHF COMM. (ECHELON) ☐ VHF COMM. (RS232) ☐ SPREAD-SPECTRUM (RS232)
USER PORT BAUD	57,600
USER PORT DATA BITS	8
USER PORT PARITY	NONE
USER PORT STOP BITS	1
USER PORT FLOW CONTROL	NONE
AUX PORT BAUD	38,400
AUX PORT DATA BITS	8
AUX PORT PARITY	NONE
AUX PORT STOP BITS	1
AUX PORT FLOW CONTROL	NONE

CONTROL SYSTEM CONFIGURATION MENU QUESTIONS

	OPTION	SELECTION
NOTE 3	RESET NAMES / MODULES	NO ■ YES ☐
	RAILROAD NUMBER	125
	CROSSING CONFIGURATION	NORMAL ■ SPLIT GATE ☐ EXTERNAL ENTRANCE GATE CONTROLLER(S) ☐
	AND1 USED AS XR	NO ■ YES ☐
	AND2 USED AS XR	NO ■ YES ☐
	AND3 USED AS XR	NO ■ YES ☐
	AND4 USED AS XR	NO ■ YES ☐
	AND5 USED AS XR	NO ■ YES ☐
	AND6 USED AS XR	NO ■ YES ☐
	AND7 USED AS XR	NO ■ YES ☐
	AND0 USED AS XR	NO ■ YES ☐
	ENTRANCE GATES*	0 ■ 1 ☐ 2 ☐ 3 ☐ 4 ☐ 5 ☐ 6 ☐ 7 ☐ 8 ☐
NOTE 2	BATTERY BANKS*	1 ■ 2 ☐ 3 ☐
	BATT MON USED*	NO ■ YES ☐
	OB RESOLUTION*	0.2 ■ 0.5 ☐ 1.0 ☐
	X-B RESOLUTION*	0.2 ☐ 0.5 ☐ 1.0 ☐ NOT PRESENT ■
	X-B2 RESOLUTION*	0.2 ☐ 0.5 ☐ 1.0 ☐ NOT PRESENT ■
	BATT MON RESOLUTION*	0.2 ☐ 0.5 ☐ 1.0 ☐ NOT PRESENT ■
	INTERNAL CROSSING CONTROLLERS*	0 ☐ 1 ■ 2 ☐
	EXTERNAL CROSSING CONTROLLERS*	0 ■ 1 ☐ 2 ☐
	DTMF ACTVATION*	YES ☐ NO ■
	iLOD MODULES*	0 ■ 1 ☐ 2 ☐ 3 ☐ 4 ☐
	AUTO INSPECTIONS*	YES ☐ NO ■
	BELL SENSOR*	0 ■ 1 ☐ 2 ☐ 3 ☐ 4 ☐
	GFT'S	YES ■ NO ☐
	BATTERIES ON GFTI	1 ■ 2 ☐
	RTU	NO ■ YES ☐
	USE NON-CRITICAL FEATURE*	NO ■ YES ☐
	FULL APPROACH MOVE ALARMS*	ACTIVATE ☐ DO NOT ACTIVATE ■
	ENABLE PASSWORD	NO ■ YES ☐

NOTES:

1. ONLY YES IN SPECIAL CIRCUMSTANCES.
2. BATTERY BANKS* = NUMBER OF BANKS EXCLUDING THE BANK APPLIED TO THE BAT MON SEAR INPUT
3. YES ON INITIAL SETUP

PRELIMINARY

NEW WORK

Invensys Rail

PROJECT #: IL2009033
DESIGNED BY: S. SPENCE
CHECKED BY: E. HORNE
DATE: 11-17-10

CSX TRANSPORTATION
RAIL TRANSPORT GROUP ENGINEERING
COMMUNICATIONS AND SIGNALS

C.P. EAST ST. ELMO
REMOTE HOUSE SIG 2E, 4E, & 6E
SEAR II: CONFIGURATION & FUNCTIONS
ALTAMONT, IL M.P. QS-154.40

DESIGNED	DIGITIZED	CHECKED	DATE
IRC/SWS	IRC/SWS	IRC/EJH	11-17-10

DESIGN DATE	REV. NO.	DRAWING	SHEET NO	FILE	SHEET
11-17-10	1	8406-1544	72	QS1544B	C06

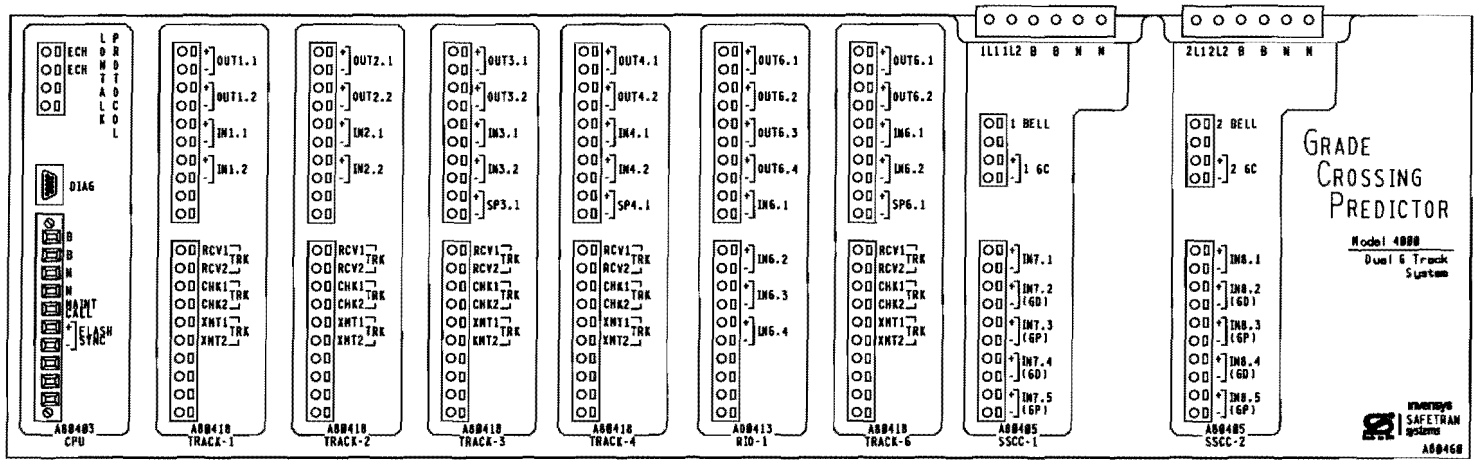

PRELIMINARY

NEW WORK

invensys

PROJECT #: IL2009033
DESIGNED BY: S. SPENCE
CHECKED BY: E. NORNE
DATE: 11-17-10

CSX TRANSPORTATION

RAIL TRANSPORT GROUP ENGINEERING
COMMUNICATIONS AND SIGNALS

C.P. EAST ST. ELMO

N. 100TH ST. 507896M
DETECTION DEVICE CONSIST CWE-12
ALTAMONT, IL M.P. QS-154.12

DESIGNED	DIGITIZED	CHECKED	DATE
IRC/SWS	IRC/SWS	IRC/EJH	11-17-10

DESIGN DATE	REV. NO.	DRAWING	SHEET NO	FILE	SHEET
11-17-10	1	8406-1544	73	QS1544B	C07

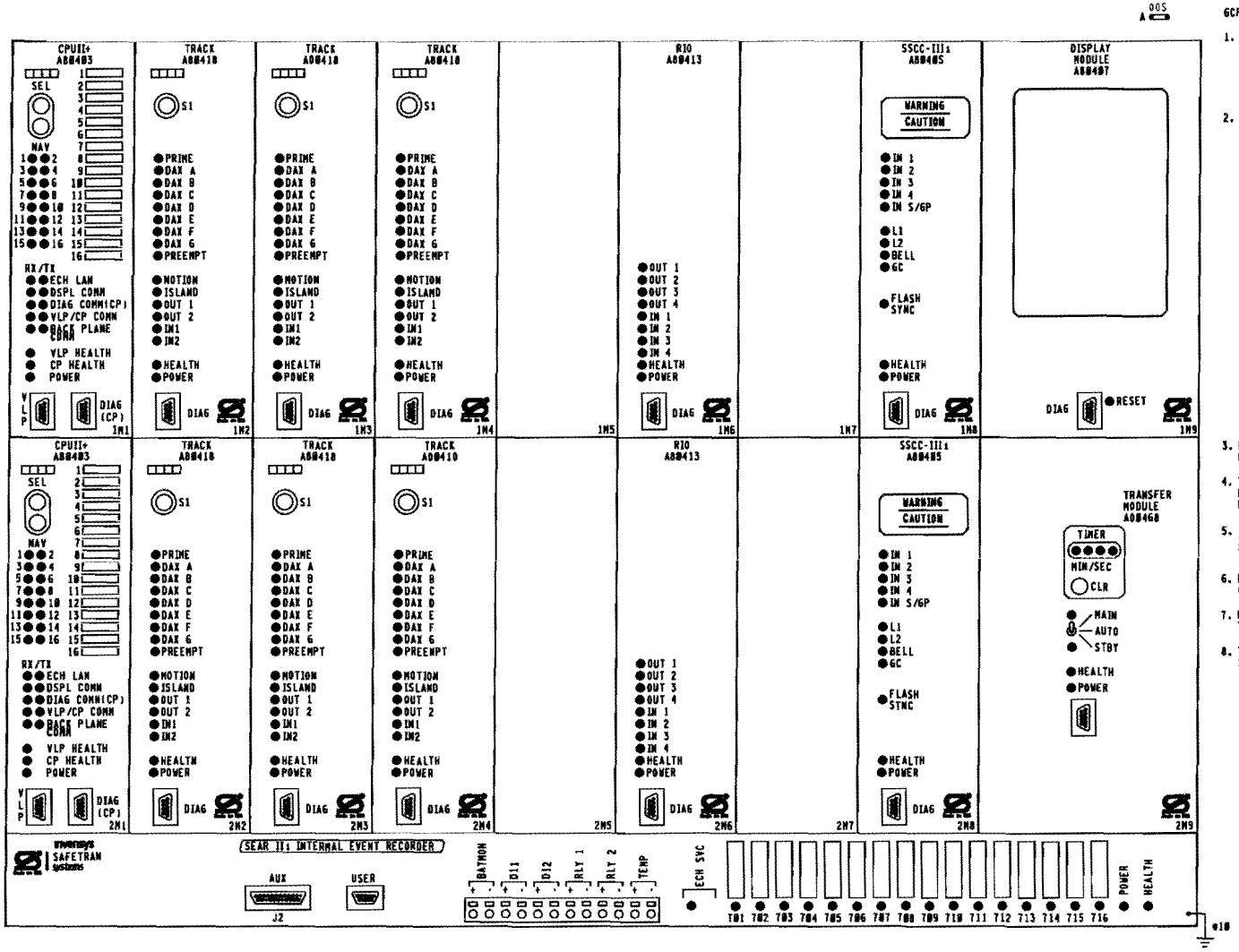

GCP 4000 APPLICATION NOTES.

1. THE GRADE CROSSING PREDICTOR (GCP) IS A MODULAR MICROPROCESSOR CONTROLLED SYSTEM THAT IS DEPLOYED TO CONTINUALLY MONITOR THE APPROACHES TO RAILROAD GRADE CROSSINGS AND TO CONTROL THE LAMPS, GATES AND BELLS ASSOCIATED WITH THOSE CROSSINGS. WHEN EQUIPPED WITH THE SEAR II1 MODULE THE GCP 4000 WILL RECORD EVENTS AND REPORT ALARMS WHEN CONNECTED TO AN OFFICE SYSTEM.

2. THE GCP 4000 GCP (A80460) IS A SIX TRACK REDUNDANT UNIT CAPABLE OF DRIVING 4 INDEPENDENT FLASHER AND GATE SIGNALS AND RECORDING EVENTS AND REPORTING ALARMS. THIS A80460 INCLUDES THE FOLLOWING MODULES.

SLOT	MODULE	FUNCTION	PART NO.
1M1	CPU-II+	MAIN	A80403
1M2	TRACK-1	MAIN	A80410
1M3	TRACK-2	MAIN	A80410
1M4	TRACK-3	MAIN	A80410
1M5	PANEL	NONE	039325
1M6	RIO-1	MAIN	A80413
1M7	PANEL	NONE	039325
1M8	SSCC-III1	A SIGNAL	A80405
1M9	DISPLAY MODULE		A80407
2M1	CPU-II+	STANDBY	A80403
2M2	TRACK-1	STANDBY	A80410
2M3	TRACK-2	STANDBY	A80410
2M4	TRACK-3	STANDBY	A80410
2M5	PANEL	NONE	039325
2M6	RIO-1	STANDBY	A80413
2M7	PANEL	NONE	039325
2M8	SSCC-III1	B SIGNAL	A80405
2M9	TRANSFER UNIT		A80406
LOWER BAY	SEAR II1	RECORDER	A80410

3. EACH TRACK MODULE HAS TWO PROGRAMMABLE INPUTS AND TWO PROGRAMABLE OUTPUTS.

4. THE SEAR II1 INTERNAL EVENT RECORDER HAS INPUTS FOR ONE BATTERY MONITOR, TWO NON-VITAL INPUTS AND TWO PROGRAMMABLE RELAY DRIVES (HEEL/FRONT).

5. LOCATED ON THE FRONT OF EACH MODULE THERE ARE LED LIGHTS TO INDICATE THE ACTIVITY OF CERTAIN FUNCTIONS OCCURRING INSIDE THE GCP.

6. BETWEEN SLOT 1 & 2 THERE IS A CHASSIS IDENTIFICATION CHIP (CIC) SOCKET AND AN ECO CONNECTOR (DB-25 FEMALE).

7. UPON THE FAILURE OF A MODULE IN SLOTS 1M1-1M7 THE AUTOMATIC TRANSFER UNIT SWITCHES TO THE STANDBY MODULES IN SLOTS 2M1-2M7.

8. THE GCP 4000 GCP (A80460) MAY USE RIO MODULES IN SLOTS 1M3, 1M6, 1M7, 2M3, 2M6 AND 2M7.

PRELIMINARY

NEW WORK

PROJECT #: IL2009833
DESIGNED BY: S. SPENCE
CHECKED BY: E. NORNE
DATE: 11-17-10

CSX TRANSPORTATION
RAIL TRANSPORT GROUP ENGINEERING
COMMUNICATIONS AND SIGNALS

C.P. EAST ST. ELNO
N. 100TH ST. 587896H
DETECTION DEVICE CONSIST CWE-12
ALTAMONT, IL M.P. OS-154.40

DESIGNED	DIGITIZED	CHECKED	DATE
IRC/SWS	IRC/SWS	IRC/EJN	11-17-10

DESIGN DATE	REV. NO.	DRAWING	SHEET NO	FILE	SHEET
11-17-10	1	8406-1544	74	OS1544H	C00

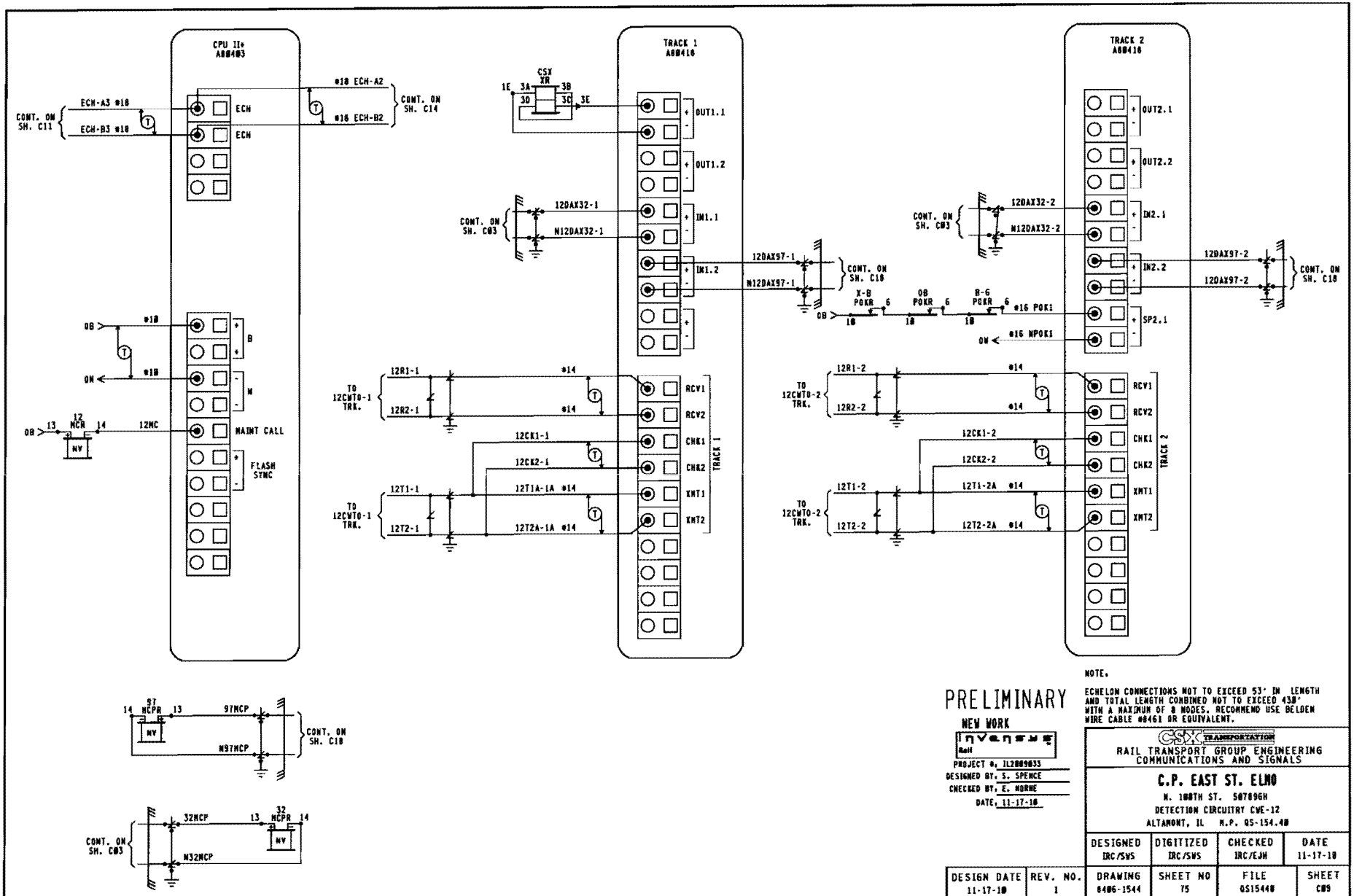
CPU II+
A80403
ECH
ECH
ECH-A3 #18
ECH-B3 #18
#18 ECH-A2
#18 ECH-B2
CONT. ON SH. C11
CONT. ON SH. C14
B
N
MAINT CALL
FLASH SYNC
12MC
MCR
NV
TRACK 1
A80410
OUT1.1
OUT1.2
IN1.1
IN1.2
RCV1
RCV2
CHK1
CHK2
XMT1
XMT2
TRACK 1
CSX XR
12DAX32-1
N12DAX32-1
CONT. ON SH. C03
12DAX97-1
N12DAX97-1
CONT. ON SH. C18
X-B POKR
OB POKR
R-G POKR
#16 POK1
#16 NPOK1
TO 12CWTO-1 TRK.
12R1-1
12R2-1
12CK1-1
12CK2-1
12T1-1
12T2-1
12T1A-1A #14
12T2A-1A #14
TRACK 2
A80410
OUT2.1
OUT2.2
IN2.1
IN2.2
SP2.1
12DAX32-2
N12DAX32-2
12DAX97-2
TO 12CWTO-2 TRK.
12R1-2
12R2-2
12CK1-2
12CK2-2
12T1-2
12T2-2
12T1-2A #14
12T2-2A #14
TRACK 2
97MCP
N97MCP
32MCP
N32MCP
MCPR
NOTE.
ECHELON CONNECTIONS NOT TO EXCEED 53' IN LENGTH AND TOTAL LENGTH COMBINED NOT TO EXCEED 438' WITH A MAXIMUM OF 8 NODES. RECOMMEND USE BELDEN WIRE CABLE #8461 OR EQUIVALENT.
PRELIMINARY
NEW WORK
PROJECT #. IL2009033
DESIGNED BY. S. SPENCE
CHECKED BY. E. HORNE
DATE. 11-17-10
CSX TRANSPORTATION
RAIL TRANSPORT GROUP ENGINEERING
COMMUNICATIONS AND SIGNALS
C.P. EAST ST. ELMO
N. 100TH ST. 507896H
DETECTION CIRCUITRY CWE-12
ALTAMONT, IL M.P. QS-154.40
DESIGNED IRC/SWS
DIGITIZED IRC/SWS
CHECKED IRC/EJH
DATE 11-17-10
DESIGN DATE 11-17-10
REV. NO. 1
DRAWING 8406-1544
SHEET NO 75
FILE QS15440
SHEET C09

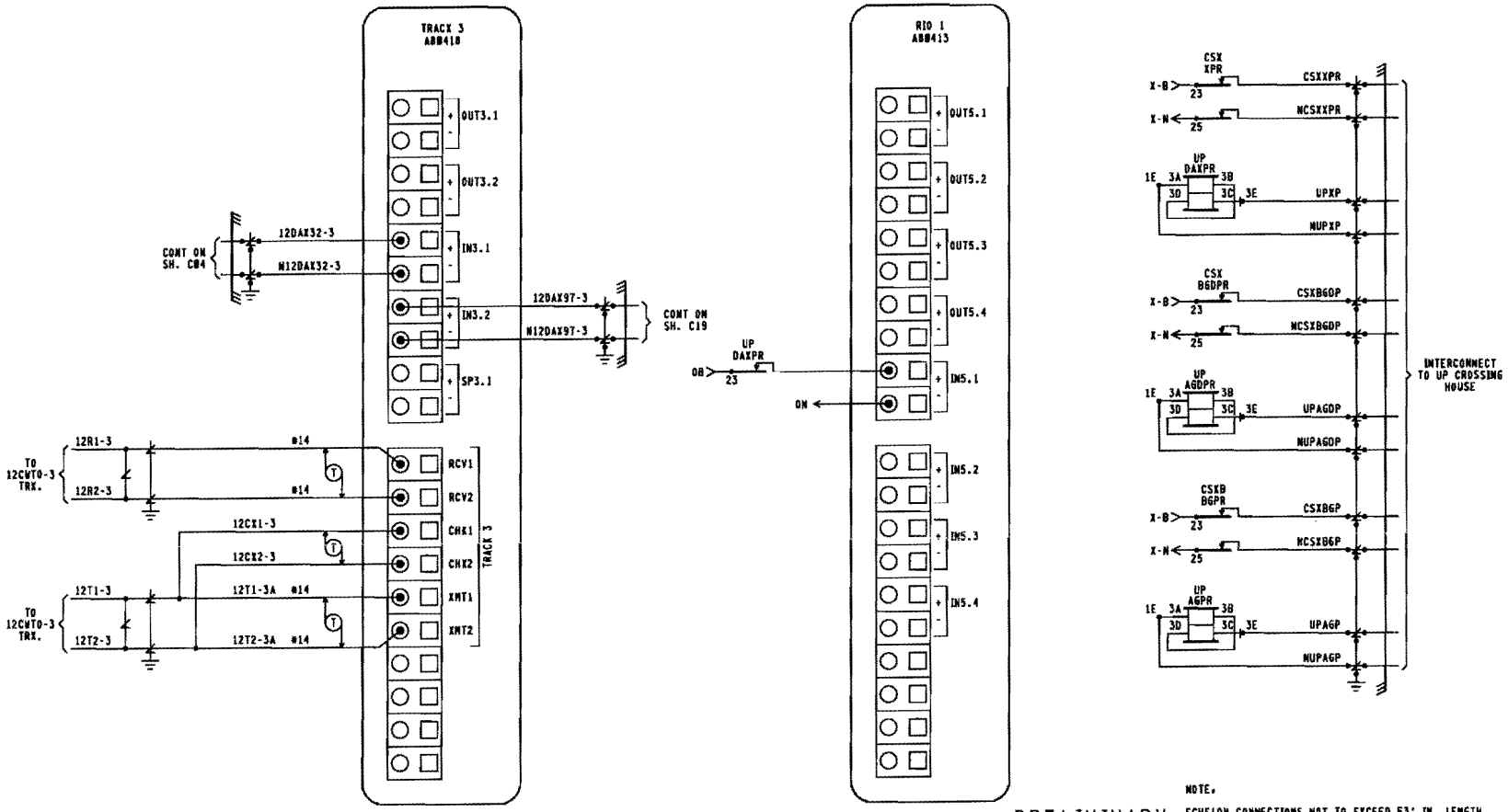

PRELIMINARY

NEW WORK

Invensys Rail

PROJECT #. IL2009033

DESIGNED BY. S. SPENCE

CHECKED BY. E. HORNE

DATE. 11-17-10

NOTE.

ECHELON CONNECTIONS NOT TO EXCEED 53' IN LENGTH AND TOTAL LENGTH COMBINED NOT TO EXCEED 430' WITH A MAXIMUM OF 6 NODES. RECOMMEND USE BELDEN WIRE CABLE #8461 OR EQUIVALENT.

CSX TRANSPORTATION

RAIL TRANSPORT GROUP ENGINEERING
COMMUNICATIONS AND SIGNALS

C.P. EAST ST. ELMO

N. 100TH ST. 50709GH
DETECTION CIRCUITRY CWE-12
ALTAMONT, IL M.P. QS-154.40

DESIGNED	DIGITIZED	CHECKED	DATE
IRC/SWS	IRC/SWS	IRC/EJH	11-17-10

DESIGN DATE	REV. NO.	DRAWING	SHEET NO	FILE	SHEET
11-17-10	1	B406-1544	76	QS15440	C10

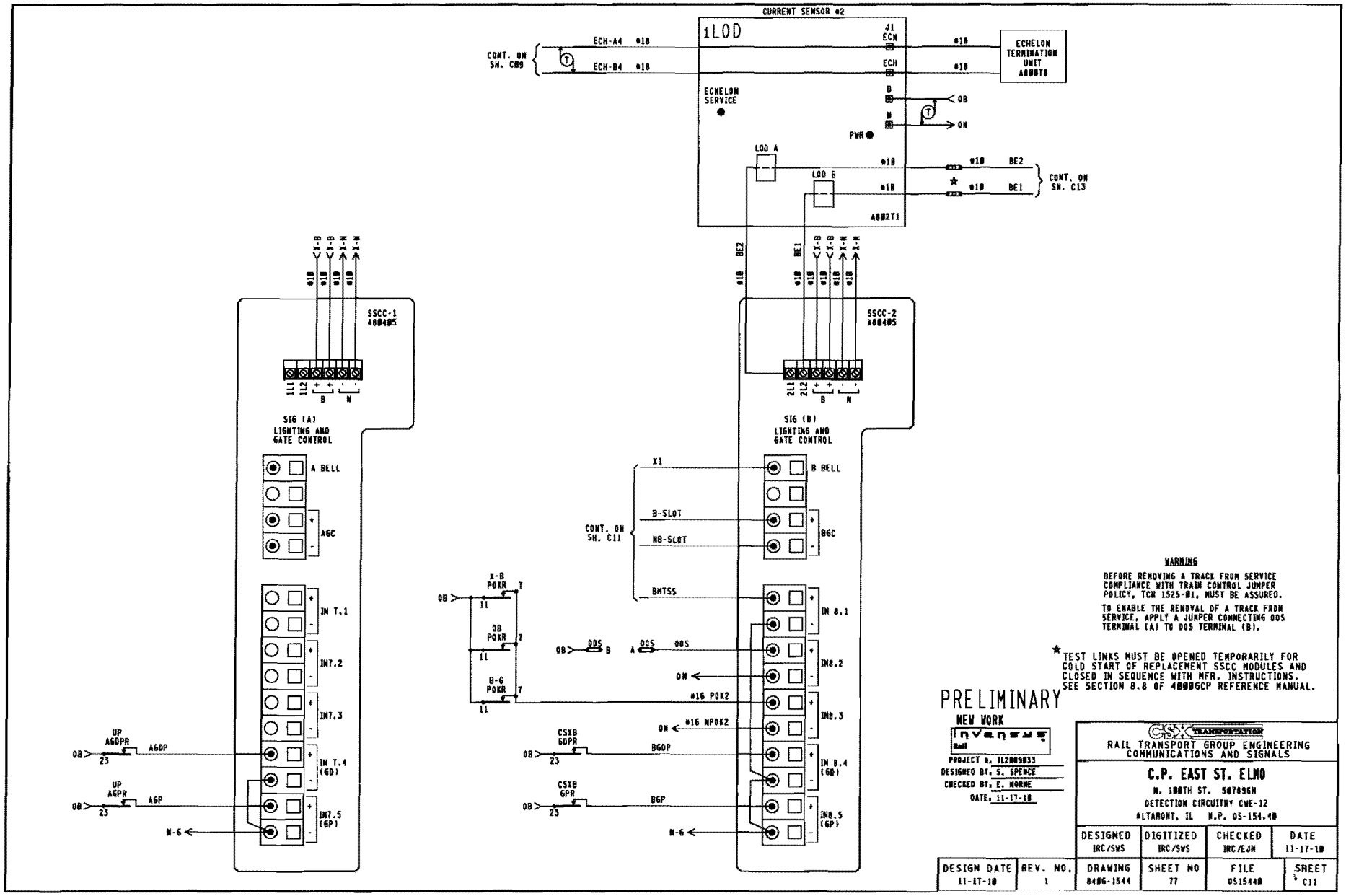
CURRENT SENSOR #2
1LOD
J1
ECN
ECH
ECHELON SERVICE
PWR
LOD A
LOD B
A802T1
CONT. ON SH. C09
ECH-A4 #18
ECH-B4 #18
ECHELON TERMINATION UNIT A800T8
OB
ON
BE2
BE1
CONT. ON SH. C13
SSCC-1 A804#5
SSCC-2 A804#5
SIG (A) LIGHTING AND GATE CONTROL
SIG (B) LIGHTING AND GATE CONTROL
A BELL
AGC
IN T.1
IN7.2
IN7.3
IN T.4 (GD)
IN7.5 (GP)
B BELL
BGC
IN 8.1
IN8.2
IN8.3
IN 8.4 (GD)
IN8.5 (GP)
X1
B-SLOT
NB-SLOT
BHTSS
CONT. ON SH. C11
X-B POKR
OB POKR
B-G POKR
OOS
#16 POK2
#16 NPOK2
UP AGDPR
UP AGPR
AGDP
AGP
CSXB GDPR
CSXB GPR
BGDP
BGP
N-G
WARNING
BEFORE REMOVING A TRACK FROM SERVICE COMPLIANCE WITH TRAIN CONTROL JUMPER POLICY, TCR 1525-01, MUST BE ASSURED.
TO ENABLE THE REMOVAL OF A TRACK FROM SERVICE, APPLY A JUMPER CONNECTING OOS TERMINAL (A) TO OOS TERMINAL (B).
* TEST LINKS MUST BE OPENED TEMPORARILY FOR COLD START OF REPLACEMENT SSCC MODULES AND CLOSED IN SEQUENCE WITH MFR. INSTRUCTIONS. SEE SECTION 8.8 OF 4000GCP REFERENCE MANUAL.
PRELIMINARY
NEW WORK
PROJECT #, TL2809033
DESIGNED BY, S. SPENCE
CHECKED BY, E. WORNE
DATE, 11-17-10
CSX TRANSPORTATION
RAIL TRANSPORT GROUP ENGINEERING
COMMUNICATIONS AND SIGNALS
C.P. EAST ST. ELMO
N. 100TH ST. 507896N
DETECTION CIRCUITRY CWE-12
ALTAMONT, IL N.P. 05-154.40
DESIGNED IRC/SWS
DIGITIZED IRC/SWS
CHECKED IRC/EJW
DATE 11-17-10
DESIGN DATE 11-17-10
REV. NO. 1
DRAWING 8486-1544
SHEET NO 77
FILE 051544#
SHEET C11

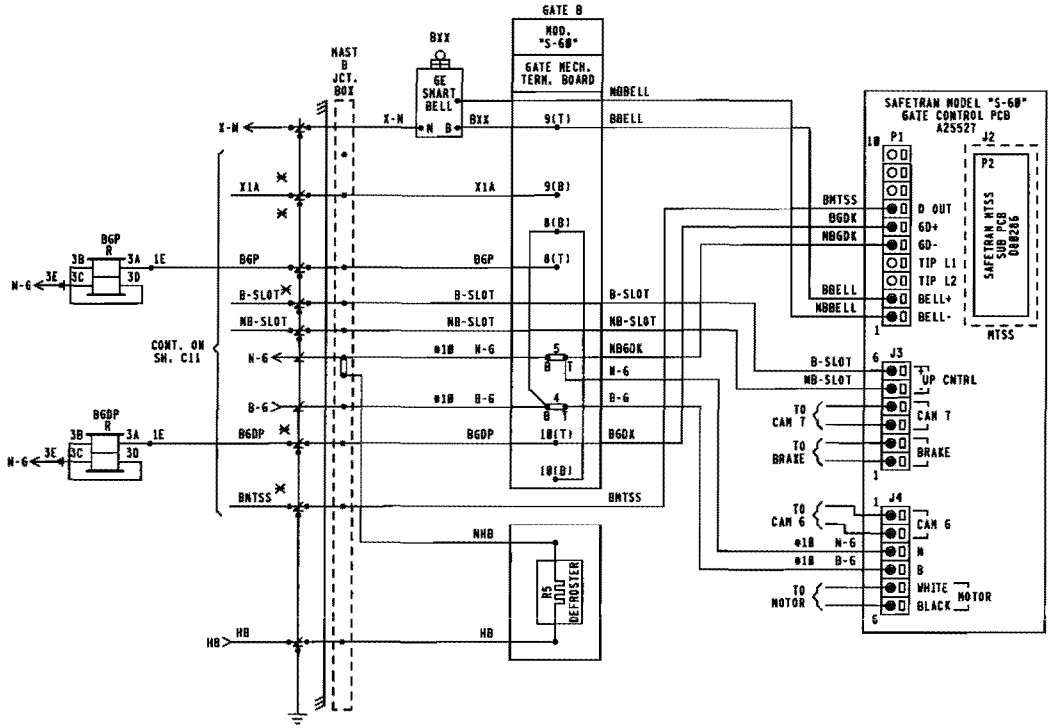

NOTES.
1. ✱ = TEST LINKS MUST BE OPEN TEMPORARILY FOR COLD START OF REPLACEMENT SSCC MODULES AND AND CLOSED IN SEQUENCE WITH MFR. INSTRUCTIONS. SEE SECTION 8.8 OF 40006CP REFERENCE MANUAL.
2. = TERMINAL IN JCT. BOX BASE
3. ALL WIRING #16 UNLESS NOTED OTHERWISE.

PRELIMINARY

NEW WORK

Invensys Rail

PROJECT #. IL2009033
DESIGNED BY. S. SPENCE
CHECKED BY. E. HONNE
DATE. 11-17-10

CSX TRANSPORTATION
RAIL TRANSPORT GROUP ENGINEERING
COMMUNICATIONS AND SIGNALS

C.P. EAST ST. ELMO

N. 100TH ST. 5WT096N
CROSSING WARNING DEVICE GATE CIRCUITRY
ALTAMONT, IL M.P. QS-154.40

DESIGNED	DIGITIZED	CHECKED	DATE
IRC/SWS	IRC/SWS	IRC/EJN	11-17-10

DESIGN DATE	REV. NO.	DRAWING	SHEET NO	FILE	SHEET
11-17-10	1	8406-1544	T8	QS15440	C12

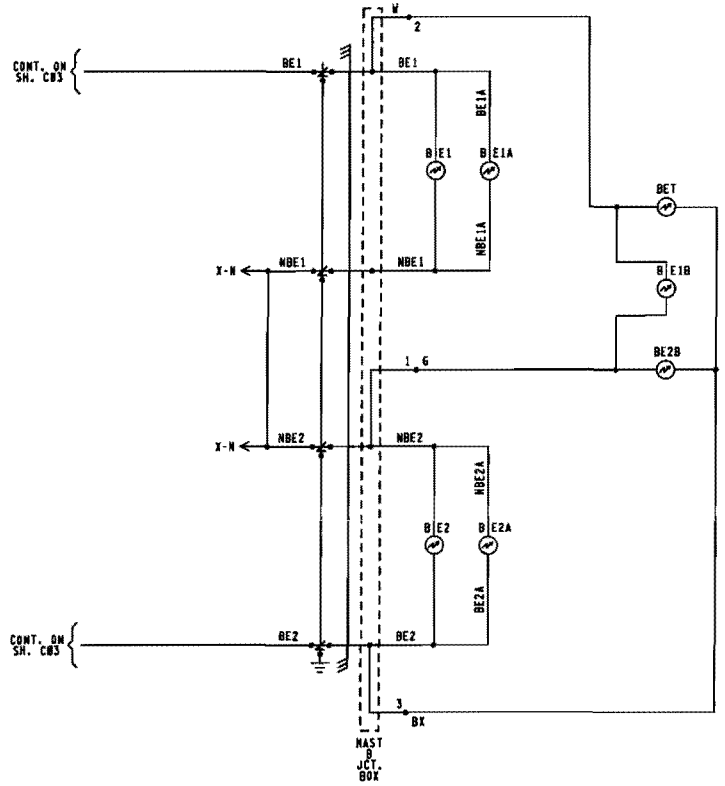

PRELIMINARY

NEW WORK

NOTES:

1. [ ] = TERMINAL IN JUNCTION BOX
2. WHEN 7 OR MORE LIGHTS ON A SINGLE STRUCTURE REFER TO SS302 FOR REQUIRED ARRESTERING
3. FEEDS TO ALL BUSSES AND LIGHT CIRCUITS ARE #10 FLEX
4. UNLESS NOTED ALL OTHER WIRING #16
5. CABLING SPECIFICATIONS SHOWN ON SH. S01

PROJECT #: 1L2009033
DESIGNED BY: S. SPENCE
CHECKED BY: E. HORNE
DATE: 11-17-10

CSX TRANSPORTATION
RAIL TRANSPORT GROUP ENGINEERING
COMMUNICATIONS AND SIGNALS

C.P. EAST ST. ELMO

N. 100TH ST. 50T896N
CROSSING WARNING DEVICE GATE CIRCUITRY
ALTAMONT, IL N.P. 05-154.40

DESIGNED	DIGITIZED	CHECKED	DATE
IRC/SWS	IRC/SWS	IRC/EJN	11-17-10

DESIGN DATE	REV. NO.	DRAWING	SHEET NO	FILE	SHEET
11-17-10	1	0406-1544	79	051544B	C13

WAYSIDE ACCESS GATEWAY CONFIGURATION	
SITE ATCS ADDRESS	7.125.469.036.07.01 7.125.LLL.666.SS.DD
SERIAL INTERFACE	38,400,NONE,8,1/NOFLOW
SERIAL FORMAT	RAW
WAG TEST MODE	DISABLED
ECHELON ADDRESS	01.07
UDP PORTS	5000, 5001, 5002, 5003
ROUTE TABLE EXPIRY	5400 SEC
BROADCAST MEDIUM	IP ETHERNET
TCP PORTS	23, 10023, 6001, 6002
DHCP SERVER	DISABLED
IP ADDRESS	192.168.13.1
TYPE 7 ROUTE LENGTH	12--7RRLLL666SS
IP NETWORK MASK	255.255.255.0
WAG CIRCUIT ID	DISABLE
ROUTING REGION DOMAIN 1	OCGSERVER1.JAX.COM
ATCS SERVER UDP PORT NUMBER	6001
TELNET NUMBERS	WAG 6002, SERIAL 10023
DEFAULT GATEWAY IP	192.168.013.031

NOTE TO INSPECTOR: AT INSTALLATION OF WAG, OR UPDATE OF THE CONFIGURATION, OR UPDATE OF THE EXECUTIVE PROGRAM, MARK-UP CONFIGURATION TABLE FOR AS IN SERVICE PLANS

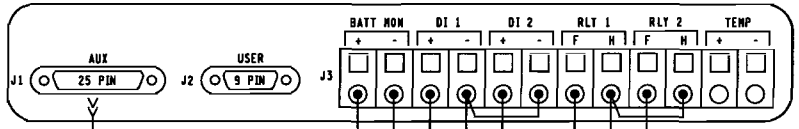

CONN NOTES:

1. WAG J3A PINOUTS:
   4 & 5 = +12VDC RADIO OUT
   7 & 0 = GND RADIO RETURN
2. WAG AND SEARII: ECHELON COMM THROUGH GCP4000 LONTALK PROTOCOL CONNECTION
3. REFER TO WAG INSTALLATION AND SETUP IN APPENDIX "A" GCP4000 SYSTEM CUT OVER TEST PROCEDURE AND CHECK OFF SHEET.

PRELIMINARY

NEW WORK

PROJECT #: IL2009033
DESIGNED BY: S. SPENCE
CHECKED BY: E. HORNE
DATE: 11-21-10

= NOTE

GCP PROGRAMMING FOR VHF RADIO

REMOTE DTMF CROSSING ACTIVATION (ACTIVATES ENTIRE CROSSING)	
TO ACTIVATE PRESS:	8960
TO DE-ACTIVATE PRESS:	8960
(ACTIVATION WILL TIME OUT AFTER 60 SEC.)	

REMOTE DTMF LIGHTING ACTIVATION (ACTIVATES FLASHING LIGHTS ONLY)	
TO ACTIVATE PRESS:	89610
TO DE-ACTIVATE PRESS:	09610
(ACTIVATION WILL TIME OUT AFTER 60 SEC.)	

NOTES:

1. ALL WIRING #16 UNLESS NOTED OTHERWISE.
2. * = EARTH GROUND REF. TERMINALS REQUIRED FOR DETECTION. DO NOT JUMPER TERMINALS. MUST BE CONNECTED TO DIFFERENT POINTS OF BUNGALOW.
3. ** = TO BE PROVIDED BY COMMUNICATIONS
4. LOOP WIRE THROUGH FERRITE BEAD TWICE.

CSX TRANSPORTATION
RAIL TRANSPORT GROUP ENGINEERING
COMMUNICATIONS AND SIGNALS

C.P. EAST ST. ELMO

N. 100TH ST. 507896N
CROSSING WARNING DEVICE GATE CIRCUITRY
ALTAMONT, IL M.P. OS-154.40

DESIGNED	DIGITIZED	CHECKED	DATE
IRC/SWS	IRC/SWS	IRC/EJH	11-17-10

DESIGN DATE	REV. NO.	DRAWING	SHEET NO	FILE	SHEET
11-17-10	1	0406-1544	08	051544B	C14

DEFAULTS AND/OR STYLE		FIELD RECORD
SEAR II: EXECUTIVE PROGRAM	VERSION: 9V725A01	VERSION: _____
APPLICATION PROGRAM (IF LOADED)	VERSION: 9V864A01	VERSION: _____

NOTE TO INSPECTOR.
AT IN SERVICE OF SEAR II: OR UPDATE OF ITS INTERNAL EXECUTIVE PROGRAM OR ITS CSXT APPLICATION PROGRAM, NOTE THE VERSION NUMBER OF EACH PROGRAM MUST IN THE BLANK FIELDS.

SITE SET UP MENU	
FUNCTION	LED DISPLAY
DATE/TIME	XX-XX-XXXX XX:XX:XX
AUTOMATIC DST ADJUSTMENT	YES
TIME ZONE	EASTERN
SITE NAME	N. 100TH ST. (TR-4)
MILEPOST	QS-154.12
DOT NUMBER	507896H
TESTER TYPE	CROSSING
DATE FORMAT	MM-DD-YYYY
TEMP FORMAT	FAHRENHEIT
INDICATE HOLD (SEC)	0
INDICATE REFRESH (SEC)	60
SITE ATCS ADDRESS	7.125.469.036.99.01 (7.RRR.III.GGG.99.01)
SITE TYPE	COLLECTOR
OFFICE ADDRESS	2.125.00.0000 (2.RRR.NN.DDDD)
POLL ID	1
MODE	GEN/ATCS
WANS XID	DISABLED
OFFICE COMM. DEVICE	■WAG (ECHELON) □DIRECT (RS232) □NCM (ECHELON) □NCM (RS232) □DIAL MODEM □5200 RADIO (RS422)
RADIO ATCS ADDR	7.125.XXX.XXX.07.01 (T.ARR.LLL.GGG.NN.01)
FIELD COMM. DEVICE	□WAG (ECHELON) ■NONE □VHF COMM. (ECHELON) □VHF COMM. (RS232) □SPREAD-SPECTRUM (RS232)
USER PORT BAUD	57,600
USER PORT DATA BITS	8
USER PORT PARITY	NONE
USER PORT STOP BITS	1
USER PORT FLOW CONTROL	NONE
AUX PORT BAUD	38,400
AUX PORT DATA BITS	8
AUX PORT PARITY	NONE
AUX PORT STOP BITS	1
AUX PORT FLOW CONTROL	NONE

CONTROL SYSTEM CONFIGURATION MENU QUESTIONS		
	OPTION	SELECTION
NOTE 9	RESET NAMES / MODULES	NO ■ YES □
	RAILROAD NUMBER	125
	CROSSING CONFIGURATION	NORMAL ■ SPLIT GATE □ EXTERNAL ENTRANCE GATE CONTROLLER(S) □
	AND1 USED AS XR	NO □ YES ■
	AND2 USED AS XR	NO ■ YES □
	AND3 USED AS XR	NO ■ YES □
	AND4 USED AS XR	NO ■ YES □
	AND5 USED AS XR	NO ■ YES □
	AND6 USED AS XR	NO ■ YES □
	AND7 USED AS XR	NO ■ YES □
	AND8 USED AS XR	NO ■ YES □
	ENTRANCE GATES*	0 □ 1 ■ 2 □ 3 □ 4 □ 5 □ 6 □ 7 □ 8 □
	GATE POSITION FAIL*	20 SECS.
NOTE 8	BATTERY BANKS*	1 □ 2 ■ 3 □
	BATT MON USED*	NO □ YES ■
	OB RESOLUTION*	0.2 ■ 0.5□ 1.0□
	X-B RESOLUTION*	0.2 ■ 0.5□ 1.0□ NOT PRESENT□
	X-B2 RESOLUTION*	0.2 □ 0.5□ 1.0□ NOT PRESENT■
	BATT MON RESOLUTION*	0.2 □ 0.5□ 1.0■ NOT PRESENT□
	INTERNAL CROSSING CONTROLLERS*	0 □ 1 □ 2 ■
	EXTERNAL CROSSING CONTROLLERS*	0 ■ 1 □ 2 □
	VHF COMMUNICATOR*	YES ■ NO □
	DTMF ACTVATION*	YES ■ NO □
NOTE 1	ACTIVATION CODE	896
	ACTIVATION TIMEOUT	(60 SEC)
	ILOD MODULES*	0 □ 1 ■ 2 □ 3 □ 4 □
NOTE 2	ANY LED BULBS USED*	NO □ YES ■
	AUTO INSPECTIONS*	YES □ NO ■
NOTE 3	BELL SENSORS*	0 □ 1 ■ 2 □ 3 □ 4 □
	BELL SENSOR TSS 1*	NO ■ YES □
	BELL SENSOR TSS 2*	NO □ YES ■
	BELL SENSOR TSS 3*	NO ■ YES □
	BELL SENSOR TSS 4*	NO ■ YES □
	BELL SENSOR TSS 5*	NO ■ YES □
	BELL SENSOR TSS 6*	NO ■ YES □
	BELL SENSOR TSS 7*	NO ■ YES □
	BELL SENSOR TSS 8*	NO ■ YES □
	BELL ON*	GATES LOWERING ■ GATES MOVING □ ALWAYS □
	GFT'S	YES ■ NO □
	BATTERIES ON GFT1	1 □ 2 ■
NOTE 4	GATE TIP SENSORS*	YES □ NO ■
	RTU	NO ■ YES □
NOTE 5	VHF VOICE CHANNEL	1 □ 2 □ 3 □ 4 □ 5 □ 6 □ 7 □ 8 □
	VHF DATA CHANNEL	1 □ 2 □ 3 □ 4 □ 5 □ 6 □ 7 □ 8 □
	USE NON-CRITICAL FEATURE*	NO ■ YES □
	FULL APPROACH MOVE ALARMS*	ACTIVATE ■ DO NOT ACTIVATE □
	ENABLE PASSWORD	NO ■ YES □

LIT BULB COUNT ON EACH CIRCUIT	NO.	TYPE OF BULB	CURRENT READING IN AMP. AT APPROX. 10.0 V ARRAY VOLTAGE
CURRENT SENSOR (2) BE1, LAMP SET UP	4	□BULBS ■LED	2.6
CURRENT SENSOR (2) BE2, LAMP SET UP	4	□BULBS ■LED	2.6

VHF RADIO CHANNELS			
1	161.130	5	161.650
2	160.710	6	160.705
3	160.560	7	160.705
4	160.860	8	160.705

NOTE 7

MENU ⟶ CONFIGURATION ⟶	
MODULES ⟶ ADD MODULE	
MODULE TYPE	WAG
MODULE NAME	DEFAULT
WAG ECHELON MODE	T

NOTE.
REFER TO WAG INSTALLATION AND SETUP IN APPENDIX "A" GCP4000 STTEM CUT OVER, TEST PROCEDURE AND CHECK OFF SHEET.

MEASURE BATTERY VOLTAGE AT INPUT		
BATTERY VOLTAGE	OB	_____ VOLTS
BATTERY VOLTAGE	X-B	_____ VOLTS
BATTERY VOLTAGE	B-6	_____ VOLTS

NOTE 6

PROGRAM MENU SELECT	
EDIT DIGITAL INPUTS	■ NO □ YES
EDIT BATTERIES	■ NO □ YES
EDIT RELAYS	■ NO □ YES
EDIT TEST LED'S	■ NO □ YES
EDIT ILOD1 SENSOR ★	■ NO □ YES
EDIT ILOD2 SENSOR ★	■ NO □ YES
EDIT ILOD3 SENSOR ★	■ NO □ YES
EDIT ILOD4 SENSOR ★	■ NO □ YES
EDIT VHF SETTINGS	■ NO □ YES
GCP4K ATCS SUBNODE	16

★STAR = OPTIONS SHOWN DEPENDANT ON NUMBER OF ILODS SELECTED

NOTES.

1. OPTION AVAILABLE IF VHF COMMUNICATOR = YES LAST 3 DIGITS OF DOT NUMBER.
2. OPTION AVAILABLE IF ILODS.
3. OPTION AVAILABLE IF BELL SENSORS.
4. OPTION AVAILABLE IF GATES.
5. OPTION AVAILABLE IF VHF RADIO.
6. ONLY YES IN SPECIAL CIRCUMSTANCES.
7. SELECT "MENU" THEN "CONFIGURATION" FROM SEAR II INTERFACE KEYPAD TO ACCESS MODULE CONFIGURATION MENU.
8. BATTERY BANKS* = NUMBER OF BANKS EXCLUDING THE BANK APPLIED TO THE BAT MON SEAR INPUT
9. YES ON INITIAL SETUP

PRELIMINARY

NEW WORK

Invensys Rail

PROJECT #: 1L2009033
DESIGNED BY: S. SPENCE
CHECKED BY: E. HORNE
DATE: 11-17-10

⬭ = NOTE

CSX TRANSPORTATION
RAIL TRANSPORT GROUP ENGINEERING
COMMUNICATIONS AND SIGNALS

C.P. EAST ST. ELMO
N. 100TH ST. 507896H
SEAR II: CONFIGURATION & FUNCTIONS
ALTAMONT, IL M.P. QS-154.40

DESIGNED	DIGITIZED	CHECKED	DATE
IRC/SWS	IRC/SWS	IRC/EJH	11-17-10

DESIGN DATE	REV. NO.	DRAWING	SHEET NO	FILE	SHEET
11-17-10	1	B406-1544	01	051544B	C15

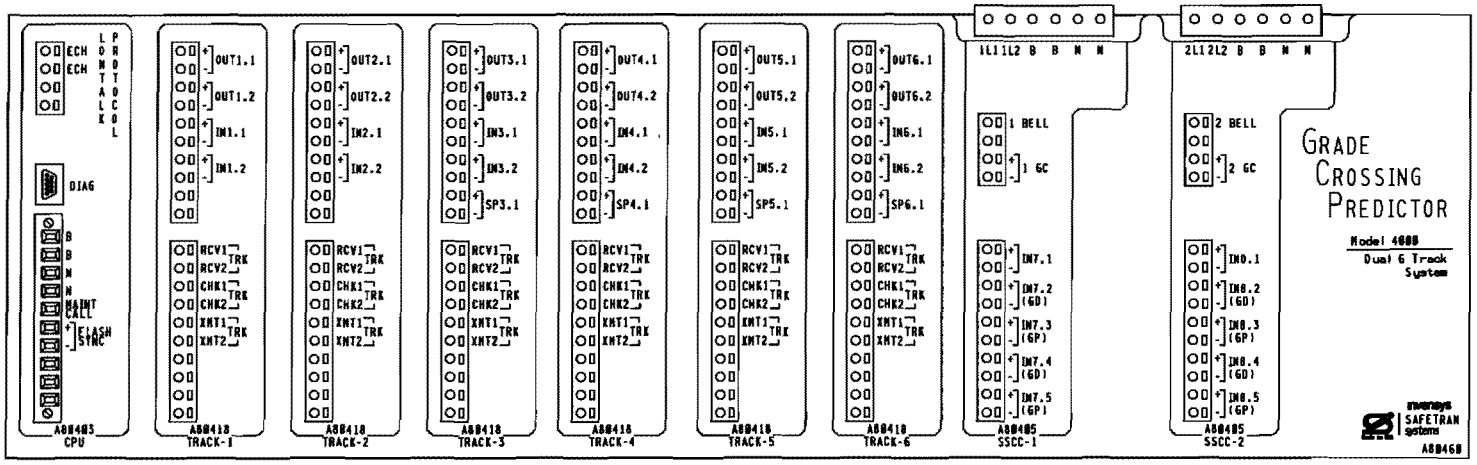

PRELIMINARY

NEW WORK

invensys Rail

PROJECT #. TL2009033

DESIGNED BY. S. SPENCE

CHECKED BY. E. NORNE

DATE. 11-17-10

= NOTE

CSX TRANSPORTATION

RAIL TRANSPORT GROUP ENGINEERING
COMMUNICATIONS AND SIGNALS

C.P. EAST ST. ELMO

SIG. 2W & 6W

DETECTION CIRCUITRY CONSIST CWE-97

ALTAMONT, IL M.P. QS-154.40

DESIGNED	DIGITIZED	CHECKED	DATE
IRC/SWS	IRC/SWS	IRC/EJH	11-17-10

DESIGN DATE	REV. NO.	DRAWING	SHEET NO	FILE	SHEET
11-17-10	1	8486-1544	02	QS1544G	C16

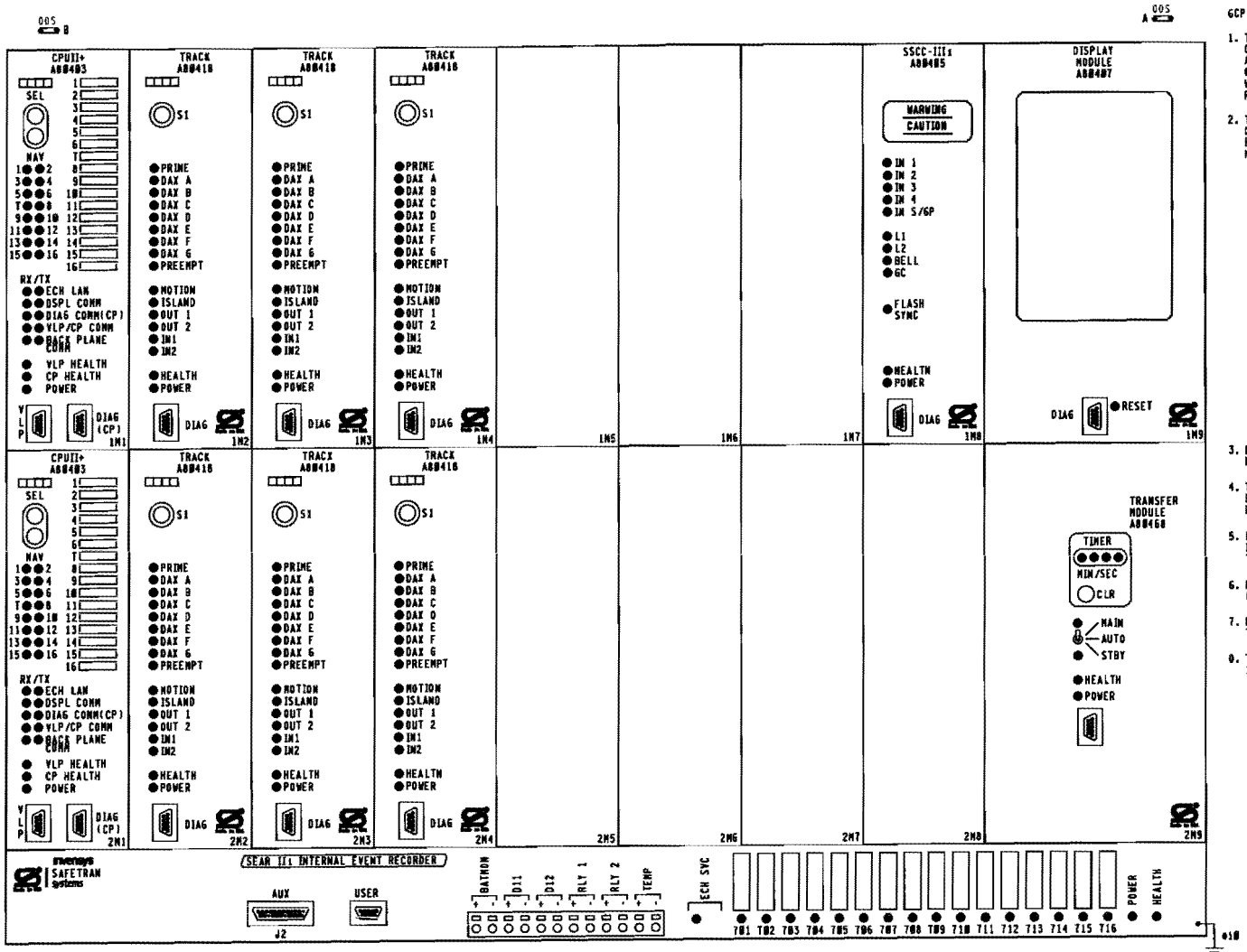

GCP 4000 APPLICATION NOTES:

1. THE GRADE CROSSING PREDICTOR (GCP) IS A MODULAR MICROPROCESSOR CONTROLLED SYSTEM THAT IS DEPLOYED TO CONTINUALLY MONITOR THE APPROACHES TO RAILROAD GRADE CROSSINGS AND TO CONTROL THE LAMPS, GATES AND BELLS ASSOCIATED WITH THOSE CROSSINGS. WHEN EQUIPPED WITH THE SEAR II1 MODULE THE GCP 4000 WILL RECORD EVENTS AND REPORT ALARMS WHEN CONNECTED TO AN OFFICE SYSTEM.

2. THE GCP 4000 GCP (A8B460) IS A SIX TRACK REDUNDANT UNIT CAPABLE OF DRIVING 4 INDEPENDENT FLASHER AND GATE SIGNALS AND RECORDING EVENTS AND REPORTING ALARMS. THIS A8B460 INCLUDES THE FOLLOWING MODULES.

SLOT	MODULE	FUNCTION	PART NO.
1N1	CPU-II+	MAIN	A8B403
1N2	TRACK-1	MAIN	A8B418
1N3	TRACK-2	MAIN	A8B418
1N4	TRACK-3	MAIN	A8B418
1N5	PANEL	NONE	D39325
1N6	PANEL	NONE	D39325
1N7	PANEL	NONE	D39325
1N8	SSCC-III1	OSS	A8B405
1N9	DISPLAY MODULE		A8B407
2N1	CPU-II+	STANDBY	A8B403
2N2	TRACK-1	STANDBY	A8B418
2N3	TRACK-2	STANDBY	A8B418
2N4	TRACK-3	STANDBY	A8B418
2N5	PANEL	NONE	D39325
2N6	PANEL	NONE	D39325
2N7	PANEL	NONE	D39325
2N8	SSCC-III1	OSS	A8B405
2N9	TRANSFER UNIT		A8B406
LOWER BAY	SEAR II1	RECORDER	A8B418

3. EACH TRACK MODULE HAS TWO PROGRAMMABLE INPUTS AND TWO PROGRAMABLE OUTPUTS.

4. THE SEAR II1 INTERNAL EVENT RECORDER HAS INPUTS FOR ONE BATTERY MONITOR, TWO NON-VITAL INPUTS AND TWO PROGRAMMABLE RELAY DRIVES (HEEL/FRONT).

5. LOCATED ON THE FRONT OF EACH MODULE THERE ARE LED LIGHTS TO INDICATE THE ACTIVITY OF CERTAIN FUNCTIONS OCCURRING INSIDE THE GCP.

6. BETWEEN SLOT 1 & 2 THERE IS A CHASSIS IDENTIFICATION CHIP (CIC) SOCKET AND AN ECD CONNECTOR (DB-25 FEMALE).

7. UPON THE FAILURE OF A MODULE IN SLOTS 1N1-1N7 THE AUTOMATIC TRANSFER UNIT SWITCHES TO THE STANDBY MODULES IN SLOTS 2N1-2N7.

8. THE GCP 4000 GCP (A8B460) MAY USE RIO MODULES IN SLOTS 1N3, 1N6, 1N7, 2N3, 2N6 AND 2N7.

PRELIMINARY

NEW WORK

Invensys Rail

PROJECT #: IL2B89033
DESIGNED BY: S. SPENCE
CHECKED BY: E. HORNE
DATE: 11-17-10

CSX TRANSPORTATION

RAIL TRANSPORT GROUP ENGINEERING
COMMUNICATIONS AND SIGNALS

C.P. EAST ST. ELMO

REMOTE HOUSE SIG. 2W & 6W
DETECTION CIRCUITRY CWE-97
ALTAMONT, IL M.P. 05-154.40

DESIGNED	DIGITIZED	CHECKED	DATE
IRC/SWS	IRC/SWS	IRC/EJH	11-17-10

DESIGN DATE	REV. NO.	DRAWING	SHEET NO	FILE	SHEET
11-17-10	1	B406-1544	83	QS1544B	C17

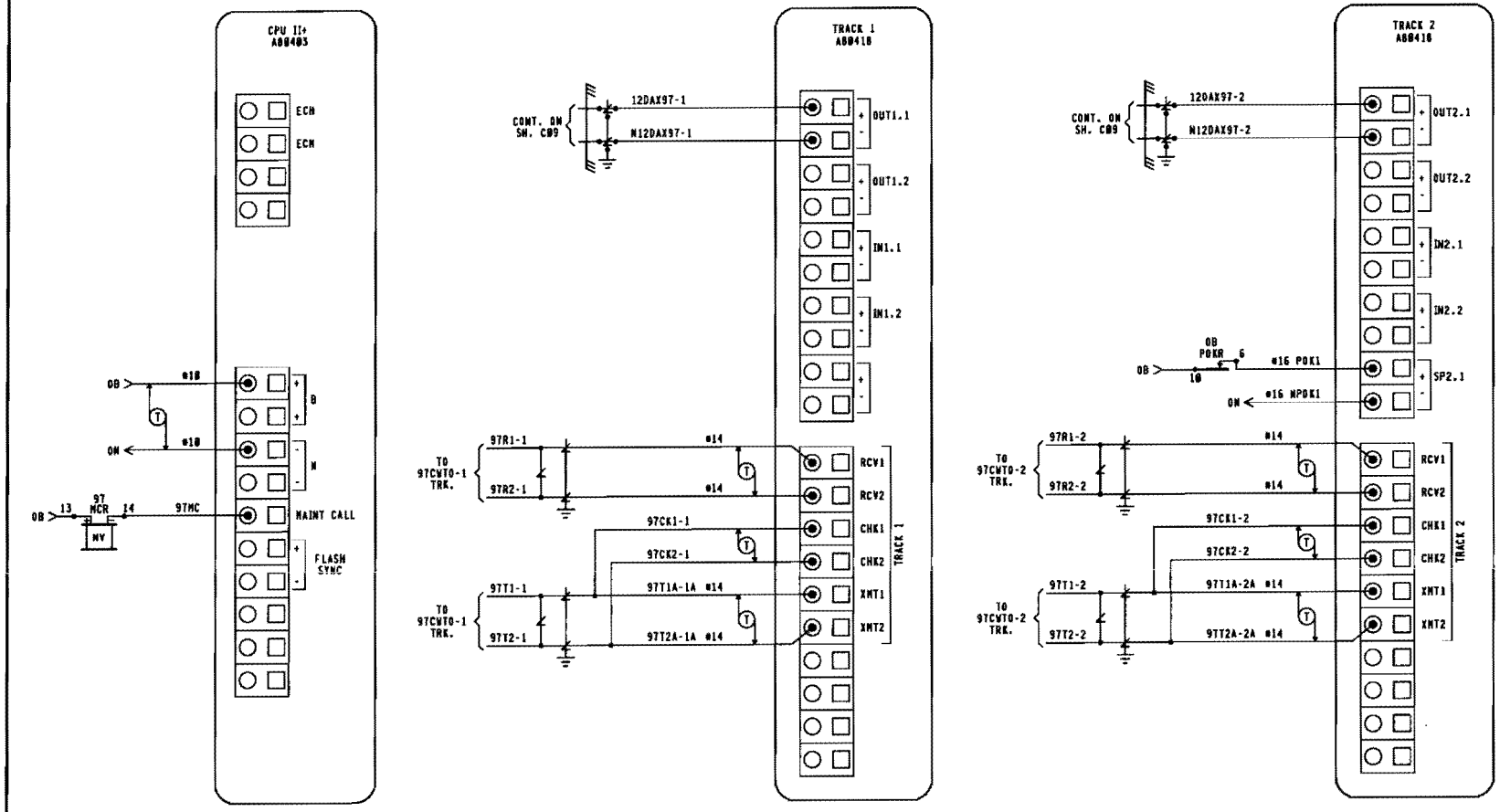

PRELIMINARY

NEW WORK

Invensys Rail

PROJECT #. IL2009033
DESIGNED BY. S. SPENCE
CHECKED BY. E. ROWNE
DATE. 11-17-10

CSX TRANSPORTATION

RAIL TRANSPORT GROUP ENGINEERING
COMMUNICATIONS AND SIGNALS

C.P. EAST ST. ELMO

REMOTE HOUSE SIG. 2W & 6W
DETECTION CIRCUITRY CWE-9T
ALTAMONT, IL M.P. 05-154.40

DESIGNED	DIGITIZED	CHECKED	DATE
IRC/SWS	IRC/SWS	IRC/EJH	11-17-10

DESIGN DATE	REV. NO.	DRAWING	SHEET NO	FILE	SHEET
11-17-10	1	8486-1544	04	GS1544D	C18

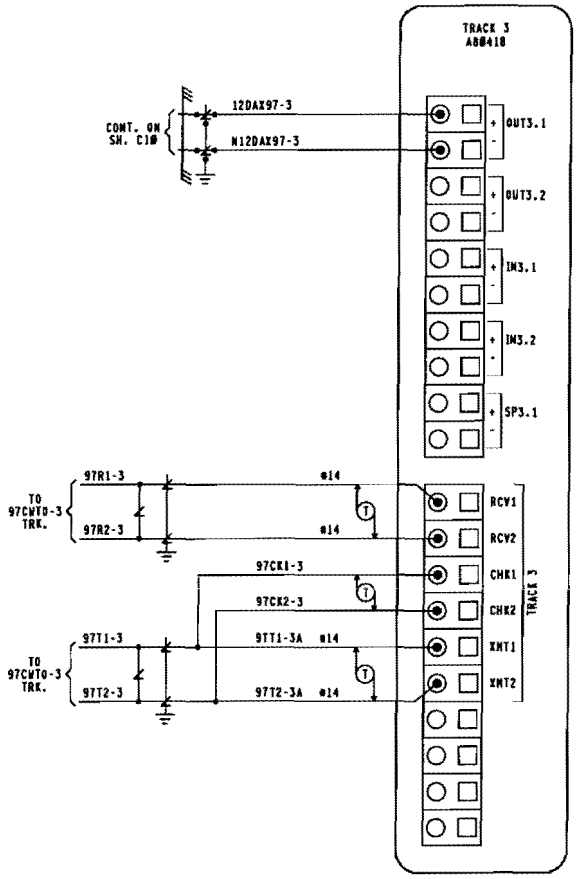

PRELIMINARY

NEW WORK

PROJECT #: 112089033
DESIGNED BY: S. SPENCE
CHECKED BY: E. NORNE
DATE: 11-17-10

CSX TRANSPORTATION
RAIL TRANSPORT GROUP ENGINEERING
COMMUNICATIONS AND SIGNALS

C.P. EAST ST. ELMO

REMOTE HOUSE S16. 2W & 6W
DETECTION CIRCUITRY CWE-97
ALTAMONT, IL M.P. QS-154.12

DESIGNED	DIGITIZED	CHECKED	DATE
IRC/SWS	IRC/SWS	IRC/EJH	11-17-10

DESIGN DATE	REV. NO.	DRAWING	SHEET NO	FILE	SHEET
11-17-10	1	8406-1544	85	QS1544#	C19

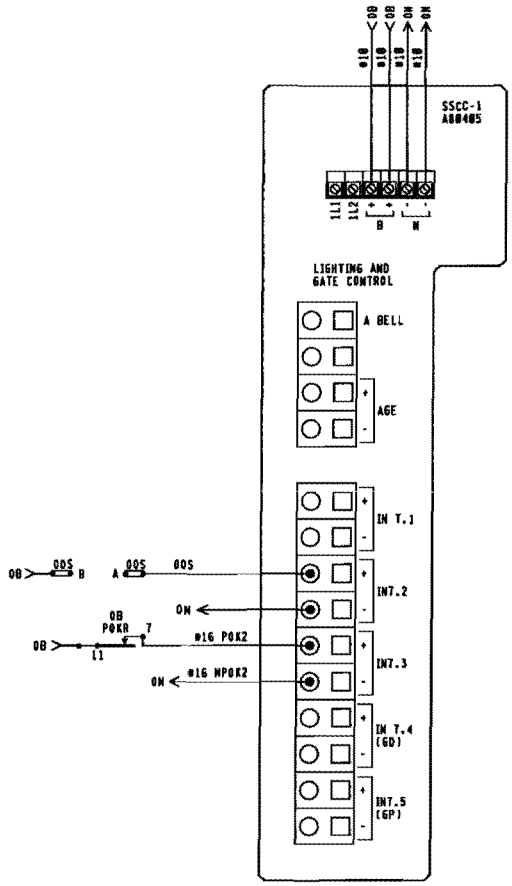

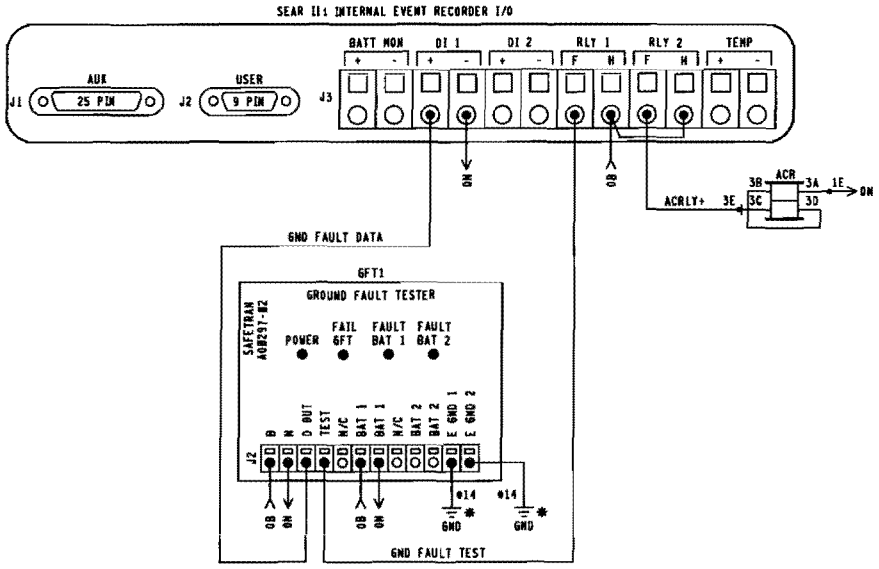

WARNING

BEFORE REMOVING A TRACK FROM SERVICE COMPLIANCE WITH TRAIN CONTROL JUMPER POLICY, TCR 1525-01, MUST BE ASSURED.

TO ENABLE THE REMOVAL OF A TRACK FROM SERVICE, APPLY A JUMPER CONNECTING OOS TERMINAL (A) TO OOS TERMINAL (B).

NOTES:

1. ALL WIRING #16 UNLESS NOTED OTHERWISE.
2. * = EARTH GROUND REF. TERMINALS REQUIRED FOR DETECTION. DO NOT JUMPER TERMINALS. MUST BE CONNECTED TO DIFFERENT POINTS OF BUNGALOW.

PRELIMINARY

NEW WORK

Invensys Rail

PROJECT #: IL2009033
DESIGNED BY: S. SPENCE
CHECKED BY: E. HORNE
DATE: 11-17-10

CSX TRANSPORTATION

RAIL TRANSPORT GROUP ENGINEERING
COMMUNICATIONS AND SIGNALS

C.P. EAST ST. ELMO

REMOTE HOUSE SIG. 2W & 6W
DETECTION CIRCUITRY CWE-97
ALTAMONT, IL M.P. QS-154.40

DESIGNED	DIGITIZED	CHECKED	DATE
IRC/SWS	IRC/SWS	IRC/EJH	11-17-10

DESIGN DATE	REV. NO.	DRAWING	SHEET NO	FILE	SHEET
11-17-10	1	0406-1544	86	QS1544B	C20

DEFAULTS AND/OR STYLE		FIELD RECORD
SEAR II: EXECUTIVE PROGRAM	VERSION: 9V725A01	VERSION: _____
APPLICATION PROGRAM (IF LOADED)	VERSION: 9V864A01	VERSION: _____

NOTE TO INSPECTOR:
AT IN SERVICE OF SEAR II: OR UPDATE OF ITS INTERNAL EXECUTIVE PROGRAM OR ITS CSXT APPLICATION PROGRAM, NOTE THE VERSION NUMBER OF EACH PROGRAM MUST IN THE BLANK FIELDS.

SITE SET UP MENU	
FUNCTION	LED DISPLAY
DATE/TIME	XX-XX-XXXX XX:XX:XX
AUTOMATIC DST ADJUSTMENT	YES
TIME ZONE	EASTERN
SITE NAME	REMOTE LOCATION
MILEPOST	QS-153.97
DOT NUMBER	815397X
TESTER TYPE	CROSSING
DATE FORMAT	MM-DD-YYYY
TEMP FORMAT	FAHRENHEIT
INDICATE HOLD (SEC)	0
INDICATE REFRESH (SEC)	60
SITE ATCS ADDRESS	7.126.462.003.99.01 (7.RRR.LLL.GGG.99.01)
SITE TYPE	COLLECTOR
OFFICE ADDRESS	2.125.60.0000 (2.RRR.MM.DDDD)
POLL ID	1
MODE	GEN/ATCS
WAMS XID	DISABLED
OFFICE COMM. DEVICE	■WAG (ECHELON) □DIRECT (RS232) □MCM (ECHELON) □MCM (RS232) □DIAL MODEM □S200 RADIO (RS422)
RADIO ATCS ADDR	7.125.497.028.07.01 (7.RRR.LLL.666.MM.01)
FIELD COMM. DEVICE	□WAG (ECHELON) ■NONE □VHF COMM. (ECHELON) □VHF COMM. (RS232) □SPREAD-SPECTRUM (RS232)
USER PORT BAUD	57,600
USER PORT DATA BITS	8
USER PORT PARITY	NONE
USER PORT STOP BITS	1
USER PORT FLOW CONTROL	NONE
AUX PORT BAUD	38,400
AUX PORT DATA BITS	8
AUX PORT PARITY	NONE
AUX PORT STOP BITS	1
AUX PORT FLOW CONTROL	NONE

	CONTROL SYSTEM CONFIGURATION MENU QUESTIONS	
	OPTION	SELECTION
NOTE 3—	RESET NAMES / MODULES	NO ■ YES □
	RAILROAD NUMBER	125
	CROSSING CONFIGURATION	NORMAL ■ SPLIT GATE □ EXTERNAL ENTRANCE GATE CONTROLLER(S) □
	AND1 USED AS XR	NO ■ YES □
	AND2 USED AS XR	NO ■ YES □
	AND3 USED AS XR	NO ■ YES □
	AND4 USED AS XR	NO ■ YES □
	AND5 USED AS XR	NO ■ YES □
	AND6 USED AS XR	NO ■ YES □
	AND7 USED AS XR	NO ■ YES □
	AND8 USED AS XR	NO ■ YES □
	ENTRANCE GATES*	0 ■ 1 □ 2 □ 3 □ 4 □ 5 □ 6 □ 7 □ 8 □
NOTE 2—	BATTERY BANKS*	1 ■ 2 □ 3 □
	BATT MON USED*	NO ■ YES □
	OB RESOLUTION*	0.2 ■ 0.5 □ 1.0 □
	X-B RESOLUTION*	0.2 □ 0.5 □ 1.0 □ NOT PRESENT ■
	X-B2 RESOLUTION*	0.2 □ 0.5 □ 1.0 □ NOT PRESENT ■
	BATT MON RESOLUTION*	0.2 □ 0.5 □ 1.0 □ NOT PRESENT ■
	INTERNAL CROSSING CONTROLLERS*	0 □ 1 ■ 2 □
	EXTERNAL CROSSING CONTROLLERS*	0 ■ 1 □ 2 □
	DTMF ACTVATION*	YES □ NO ■
	±LOD MODULES*	0 ■ 1 □ 2 □ 3 □ 4 □
	AUTO INSPECTIONS*	YES □ NO ■
	BELL SENSOR*	0 ■ 1 □ 2 □ 3 □ 4 □
	GFT'S	YES ■ NO □
	BATTERIES ON GFT1	1 ■ 2 □
	RTU	NO ■ YES □
	USE NON-CRITICAL FEATURE*	NO ■ YES □
	FULL APPROACH MOVE ALARMS*	ACTIVATE □ DO NOT ACTIVATE ■
	ENABLE PASSWORD	NO ■ YES □

NOTES:

1. ONLY YES IN SPECIAL CIRCUMSTANCES.
2. BATTERY BANKS* = NUMBER OF BANKS EXCLUDING THE BANK APPLIED TO THE BAT MON SEAR INPUT
3. YES ON INITIAL SETUP

PRELIMINARY

NEW WORK

Invensys Rail

PROJECT #: IL2000033
DESIGNED BY: S. SPENCE
CHECKED BY: E. NORNE
DATE: 11-17-10

CSX TRANSPORTATION
RAIL TRANSPORT GROUP ENGINEERING
COMMUNICATIONS AND SIGNALS

C.P. EAST ST. ELMO

REMOTE HOUSE SIG. 2W & 6W
SEAR II: CONFIGURATION & FUNCTIONS
ALTAMONT, IL M.P. QS-154.40

DESIGNED	DIGITIZED	CHECKED	DATE
IRC/SWS	IRC/SWS	IRC/EJH	11-17-10

DESIGN DATE	REV. NO.	DRAWING	SHEET NO	FILE	SHEET
11-17-10	1	8486-1544	87	QS1544Q	C21