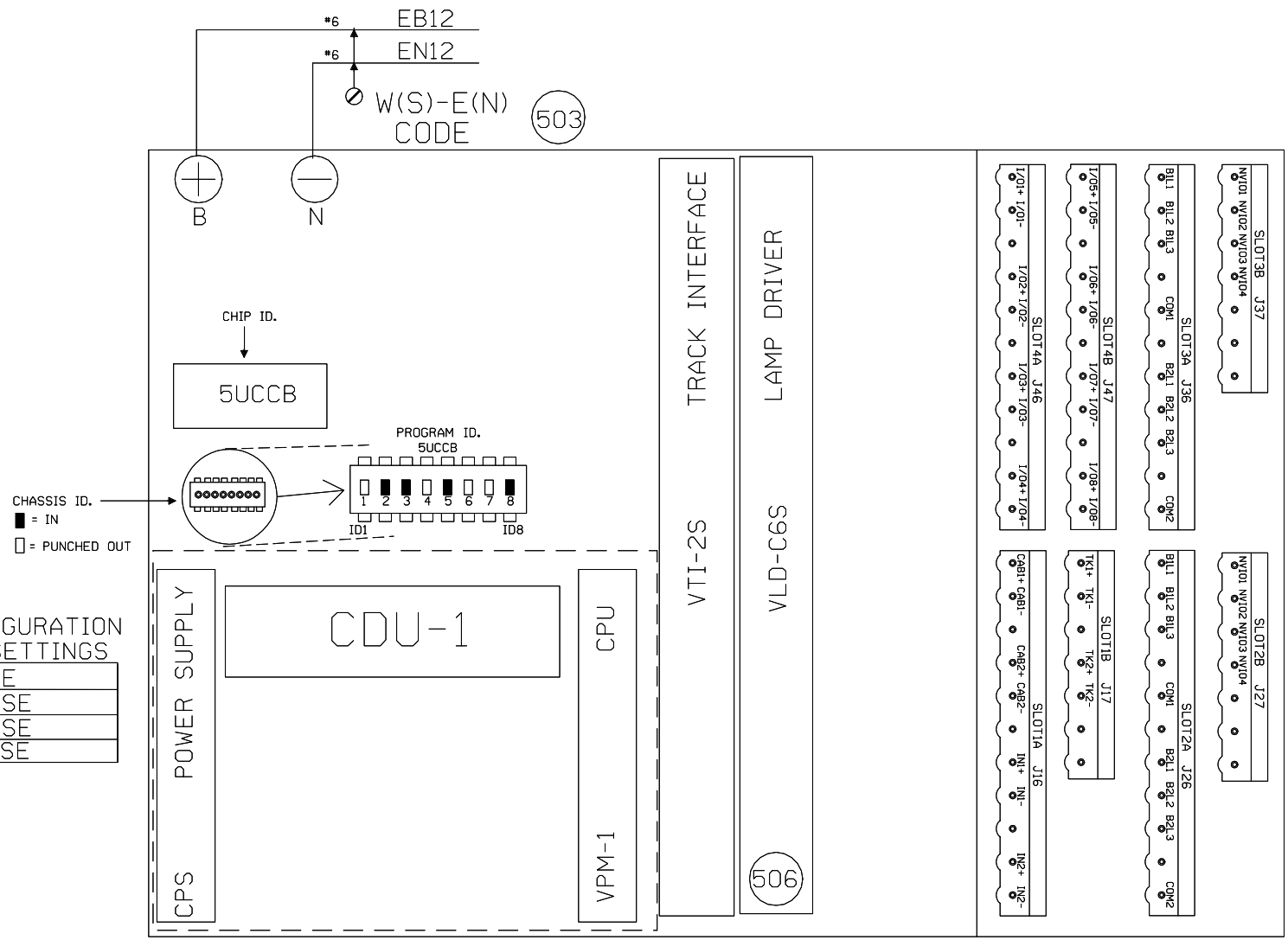

VITAL CONFIGURATION
PROGRAM SETTINGS

UCCB	TRUE
UCCBE	FALSE
UCCBW	FALSE
UCCBEW	FALSE

CODE 5
OPERATION SETTINGS

LC1SW	FALSE	L ALT-5	FALSE
LC5SW	FALSE	R ALT-5	FALSE
RC1SW	FALSE		
RC5SW	FALSE		

= IN

= OUT

CTC/KLR
07/13/10

~~NEW SHEET~~
VILLA GROVE SUBDIVISION
SIGNALS 1007(W(S))/1008(E(N))
M.P. 100.78
4'X4' HOUSE

Designed: 07/13/10
INSTALL FLS/GATES & CONSTANT WARNING AT TR 13
M.P. 101.40
Rec#: WO#: 05343
ISs: RLT / / /CTC/JTB

1 09-20-06
INSTALL EC5 BETWEEN GOODWINE & ELLIS
M.P. 95.00 TO M.P. 108.54.
PHASE II.
A.F.E. #87539
JJL
/ /CTC/RCB

MODIFICATION LEVEL	
Q. A. LAST LEVEL CHECKED	DP
LAST LEVEL MOD THIS TYPICAL	DP
LAST LEVEL BY DESIGNER	DP
CHANGED FROM TYPICAL?	Y

REV 02/26/07 1TESINTC.3

UNION PACIFIC
QUALITY PRODUCTIVITY SAFETY
SIGNAL DESIGN

DES:	CTC
DIG:	CTC
CHK:	JJL
A.F.E.	87539
ID= 030110078.3S	

UNION PACIFIC RAILROAD

81ST STREET, ILLINOIS TO
VILLA GROVE, ILLINOIS
C.T.C. CIRCUITS

Office of AVP Engineering - Design Omaha, Nebraska

DATE 09-20-06
SHEET 3
DWG 100.78
S-301

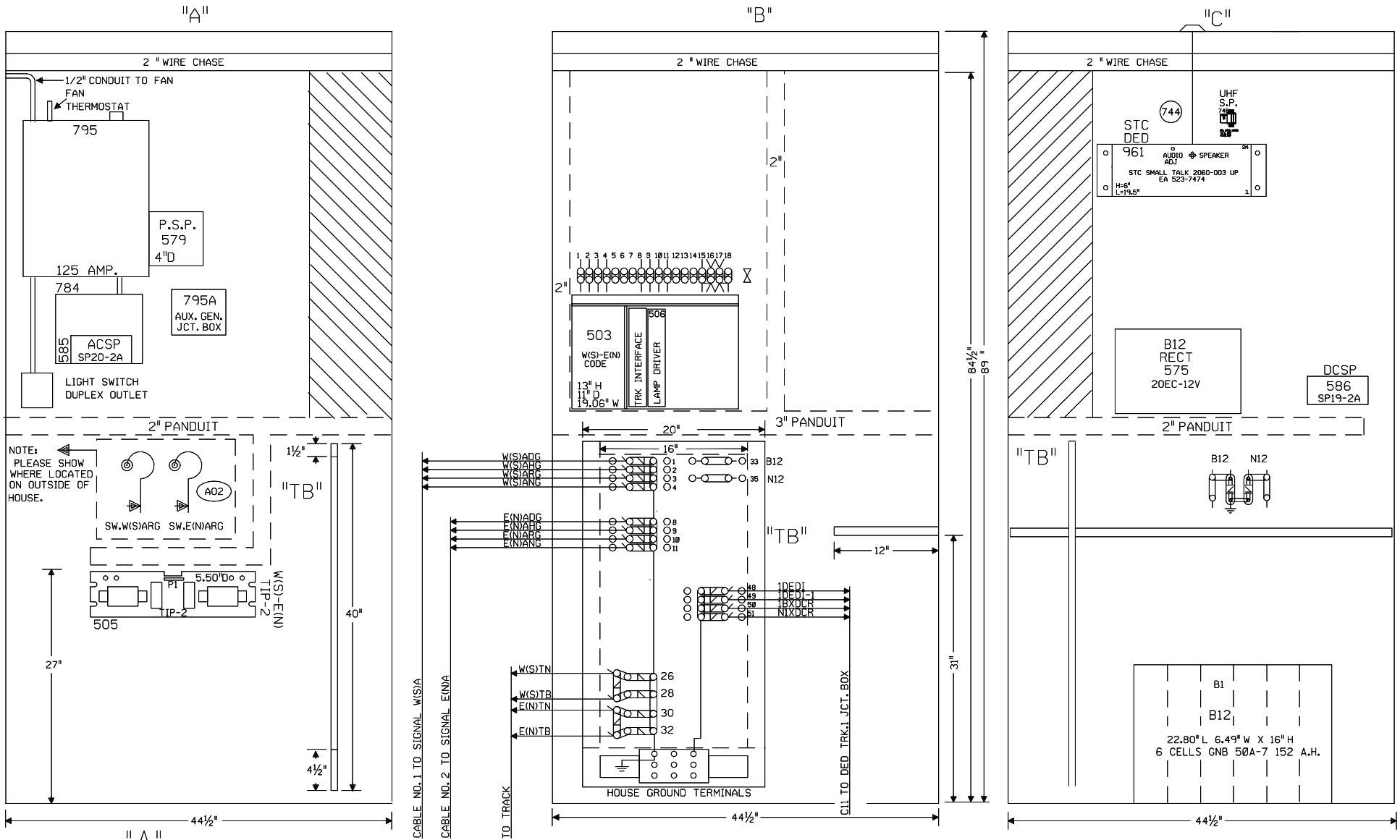

Designed: 07/13/10
INSTALL FLS/GATES & CONSTANT WARNING AT TR 13 M.P. 101.40
Rec#: 156 WO#: 05343 RLT / /CTC/JTB

1	09-20-06	INSTALL EC5 BETWEEN GOODWINE & ELLIS M.P. 95.00 TO M.P. 108.54. PHASE II. A.F.E. #87539	JJL / /CTC/RCB

MODIFICATION LEVEL	
Q.A. LAST LEVEL CHECKED	DP
LAST LEVEL MOD THIS TYPICAL	DP
LAST LEVEL BY DESIGNER	DP
CHANGED FROM TYPICAL?	Y

REV 02/26/07 1TE5INTC.4

UNION PACIFIC
QUALITY PRODUCTIVITY SAFETY
SIGNAL DESIGN

DES: CTC
DIG: CTC
CHK: JJL
A.F.E. 87539
ID= 030110078.4S

UNION PACIFIC RAILROAD

81ST STREET, ILLINOIS TO VILLA GROVE, ILLINOIS
C.T.C. CIRCUITS

Office of AVP Engineering - Design Omaha, Nebraska

DATE 09-20-06
SHEET 4
DWG 100.78
S-301

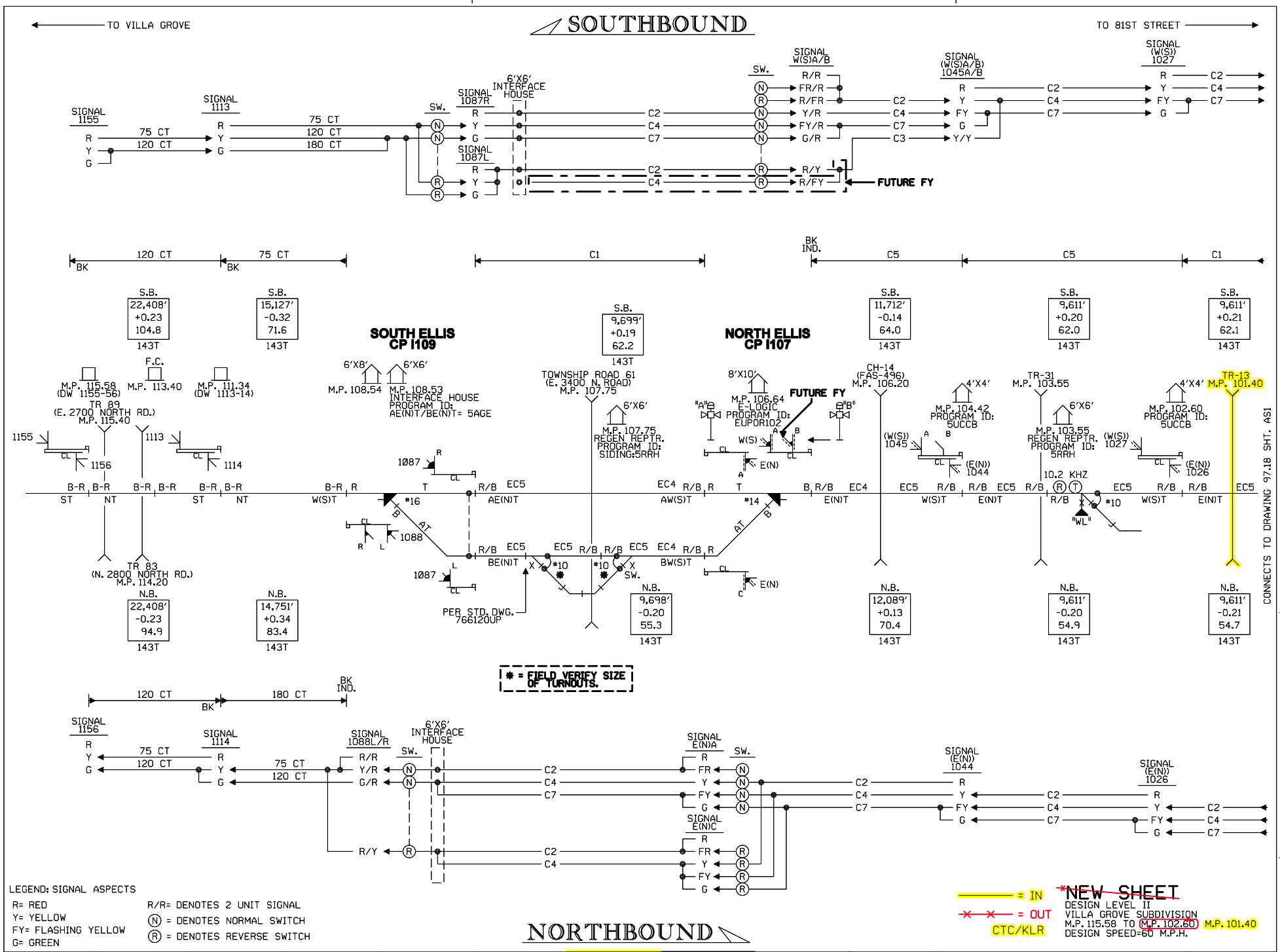
TO VILLA GROVE
SOUTHBOUND
TO 81ST STREET
SIGNAL 1155
SIGNAL 1113
SIGNAL 1087R
SIGNAL 1087L
6'X6' INTERFACE HOUSE
SW.
SIGNAL W(S)A/B
SIGNAL (W(S)A/B) 1045A/B
SIGNAL (W(S)) 1027
75 CT
120 CT
180 CT
FUTURE FY
BK IND.
BK
C1
C2
C3
C4
C5
C7
S.B. 22,408' +0.23 104.8 143T
S.B. 15,127' -0.32 71.6 143T
S.B. 9,699' +0.19 62.2 143T
S.B. 11,712' -0.14 64.0 143T
S.B. 9,611' +0.20 62.0 143T
S.B. 9,611' +0.21 62.1 143T
SOUTH ELLIS CP 1109
NORTH ELLIS CP 1107
M.P. 115.58 (DW 1155-56)
F.C. M.P. 113.40
M.P. 111.34 (DW 1113-14)
TR 89 (E. 2700 NORTH RD.) M.P. 115.40
TR 83 (N. 2800 NORTH RD.) M.P. 114.20
6'X8'
6'X6'
M.P. 108.54
M.P. 108.53 INTERFACE HOUSE PROGRAM ID: AE(N)T/BE(N)T= 5AGE
TOWNSHIP ROAD 61 (E. 3400 N. ROAD) M.P. 107.75
M.P. 107.75 REGEN REPTR. PROGRAM ID: SIDING:5RRH
8'X10'
M.P. 106.64 E-LOGIC PROGRAM ID: EUPOR102
CH-14 (FAS-496) M.P. 106.20
4'X4'
M.P. 104.42 PROGRAM ID: 5UCCB
TR-31 M.P. 103.55
M.P. 103.55 REGEN REPTR. PROGRAM ID: 5RRH
M.P. 102.60 PROGRAM ID: 5UCCB
TR-13 M.P. 101.40
1155
1156
1113
1114
1087
1088
B-R B-R B-R B-R B-R B-R B-R R T R/B EC5 EC4 R/B R T B R/B EC4 EC5 R/B R/B EC5 R/B R T EC5 R/B R/B EC5
ST NT ST NT W(S)T AE(N)T AW(S)T E(N)T W(S)T E(N)T W(S)T E(N)T
#16
#14
#10
10.2 KHZ
"WL"
R/B EC5 EC5 R/B R/B EC5 EC4 R/B R
BE(N)T BW(S)T
PER STD. DWG. 766120UP
N.B. 22,408' -0.23 94.9 143T
N.B. 14,751' +0.34 83.4 143T
N.B. 9,698' -0.20 55.3 143T
N.B. 12,089' +0.13 70.4 143T
N.B. 9,611' -0.20 54.9 143T
N.B. 9,611' -0.21 54.7 143T
CONNECTS TO DRAWING 97.18 SHT. AS1
* = FIELD VERIFY SIZE OF TURNOUTS.
SIGNAL 1156
SIGNAL 1114
SIGNAL 1088L/R
SIGNAL E(N)A
SIGNAL E(N)C
SIGNAL (E(N)) 1044
SIGNAL (E(N)) 1026
R/R
R/Y
NORTHBOUND
LEGEND: SIGNAL ASPECTS
R= RED
Y= YELLOW
FY= FLASHING YELLOW
G= GREEN
R/R= DENOTES 2 UNIT SIGNAL
(N) = DENOTES NORMAL SWITCH
(R) = DENOTES REVERSE SWITCH
= IN
= OUT
CTC/KLR
*NEW SHEET
DESIGN LEVEL II
VILLA GROVE SUBDIVISION
M.P. 115.58 TO M.P. 102.60 M.P. 101.40
DESIGN SPEED=60 M.P.H.
Designed: 07/13/10
INSTALL FLS/GATES & CONSTANT WARNING AT TR 13 M.P. 101.40
Rec*: WO#: 05343
IS: RLT/ /CTC/JTB
1 09-20-06
INSTALL EC5 BETWEEN GODWIN & ELLIS M.P. 95.00 TO M.P. 108.54. PHASE II.
A.F.E. #87539
/CTC/RCB
UNION PACIFIC
QUALITY PRODUCTIVITY SAFETY
SIGNAL DESIGN
DES: CTC
DIG: CTC
CHK: RLL
A.F.E. 87539
ID= 030110664.AS1
UNION PACIFIC RAILROAD
81ST STREET, ILLINOIS TO VILLA GROVE, ILLINOIS
C.T.C. CIRCUITS
Office of AVP Engineering - Design
Omaha, Nebraska
DATE 09-20-06
SHEET AS1
DWG 106.64
S-301

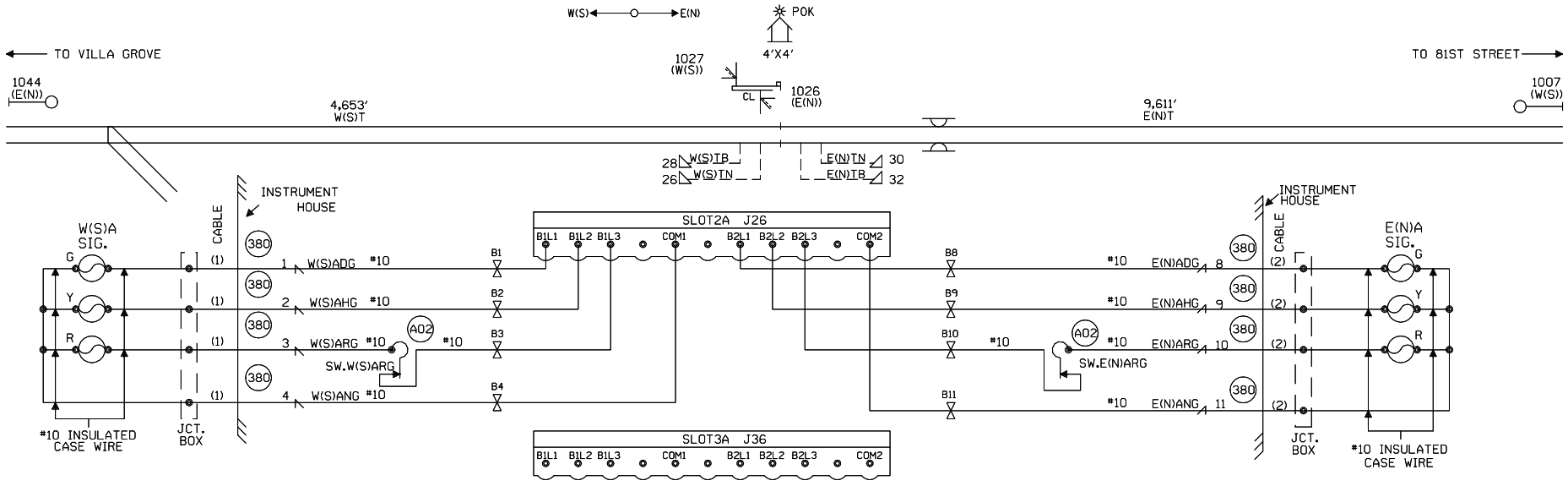

CONNECTS TO DWG. 103.55

CONNECTS TO DWG. 100.78 M.P. 101.40

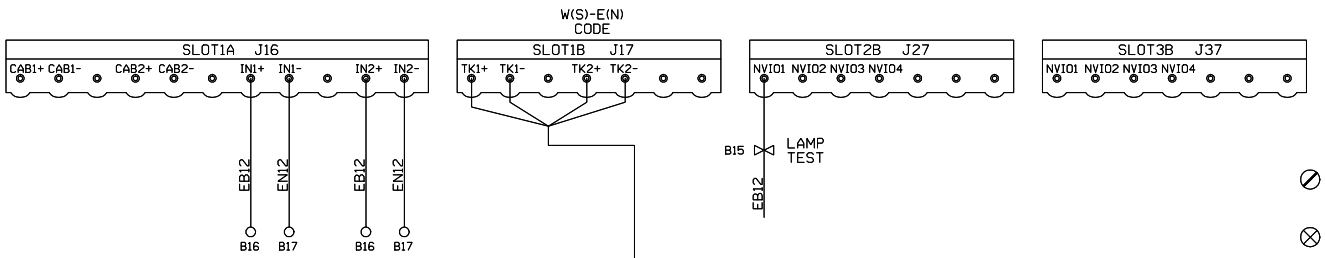

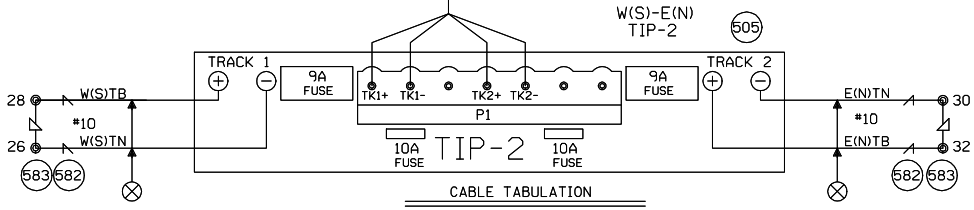

CABLE TABULATION

CABLE NO.1-5C.NØ.6 HSE. TO SIGNAL W(S)A
CABLE NO.2-5C.NØ.6 HSE. TO SIGNAL E(N)A

NOTES:

⊘ = OBSERVE CORRECT POLARITY EQUIPMENT WILL BE DAMAGED IF CONNECTIONS ARE REVERSED.

⊗ = TWISTED WIRES.

ALL WIRING TO TRACK 2C.NO.6 U.G.B.T. CABLE

ALL HOUSE WIRING TO BE NO.16 UNLESS OTHERWISE SPECIFIED

REFER TO STANDARDS DRAWING FOR HOUSE GROUNDING SCHEME.

ALL GROUND CONNECTIONS TO BE #6 OR LARGER, SIGNAL WIRING SHOP TO RUN ALL GROUND CONNECTIONS.

ENSURE TRACK POLARITY IS TRANSPOSED ACROSS ALL INSULATED JOINTS.

⧖ = TEST TERMINALS MUST BE INSTALLED ON ALL WIRING CONNECTED TO EXTERNAL CABLES (EXCEPT TRACK AND A.C. POWER WIRES).

SHOW ACTUAL DED INSTALLED LOCATION ON DRAWING.

= IN

= OUT

CTC/KLR
07/13/10

~~NEW SHEET~~
VILLA GROVE SUBDIVISION
SIGNALS 1027(W(S))/1026(E(N))
M.P. 102.60
4'X4' HOUSE

				Designed: 07/13/10 INSTALL FLS/GATES & CONSTANT WARNING AT TR 13 M.P. 101.40 Rec#: WO#: 05343 IS: RLT / / /CTC/JTB	1 09-20-06 INSTALL EC5 BETWEEN GOODWINE & ELLIS M.P. 95.00 TO M.P. 108.54. PHASE II. A.F.E. #87539 JJL / /CTC/RCB	MODIFICATION LEVEL		UNION PACIFIC QUALITY PRODUCTIVITY SAFETY SIGNAL DESIGN	DES: CTC DIG: CTC CHK: JJL A.F.E. 87539 ID= 030110260.1S	UNION PACIFIC RAILROAD 81ST STREET, ILLINOIS TO VILLA GROVE, ILLINOIS C.T.C. CIRCUITS Office of AVP Engineering - Design Omaha, Nebraska	DATE 09-20-06 SHEET 1 DWG 102.60 S-301
						Q. A. LAST LEVEL CHECKED	DP				
						LAST LEVEL MOD THIS TYPICAL	DP				
						LAST LEVEL BY DESIGNER	DP				
						CHANGED FROM TYPICAL?	Y				
						REV 02/26/07 1TESINTC.1					

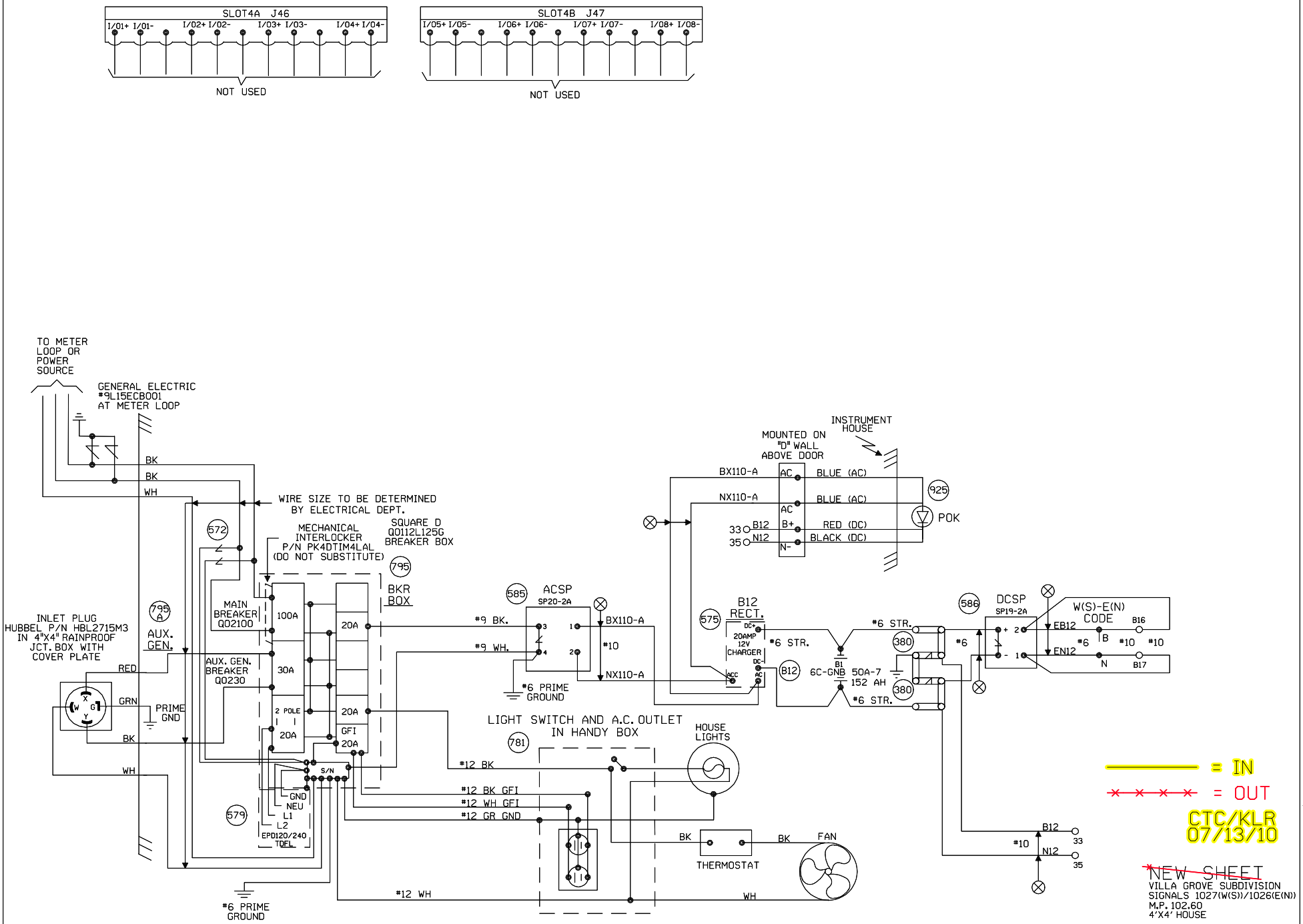

Designed: 07/13/10	1	09-20-06	MODIFICATION LEVEL
INSTALL FLS/GATES & CONSTANT WARNING AT TR 13 M.P. 101.40	INSTALL ECS BETWEEN GOODWINE & ELLIS M.P. 95.00 TO M.P. 108.54. PHASE II. A.F.E. #87539		Q. A. LAST LEVEL CHECKED — DP
Rec*: ISI WO#:05343 RLT / /CTC/JTB	/ JJL /CTC/RCB		LAST LEVEL MOD THIS TYPICAL — DP
			LAST LEVEL BY DESIGNER — DP
			CHANGED FROM TYPICAL? — Y
			REV 02/26/07 1TESINTC.2

UNION PACIFIC — QUALITY PRODUCTIVITY SAFETY — SIGNAL DESIGN

DES:	CTC
DIG:	CTC
CHK:	JJL
A.F.E.	87539
ID= 030110260.2S	

UNION PACIFIC RAILROAD

81ST STREET, ILLINOIS TO VILLA GROVE, ILLINOIS
C.T.C. CIRCUITS

Office of AVP Engineering - Design — Omaha, Nebraska

DATE	09-20-06
SHEET	2
DWG	102.60
	S-301

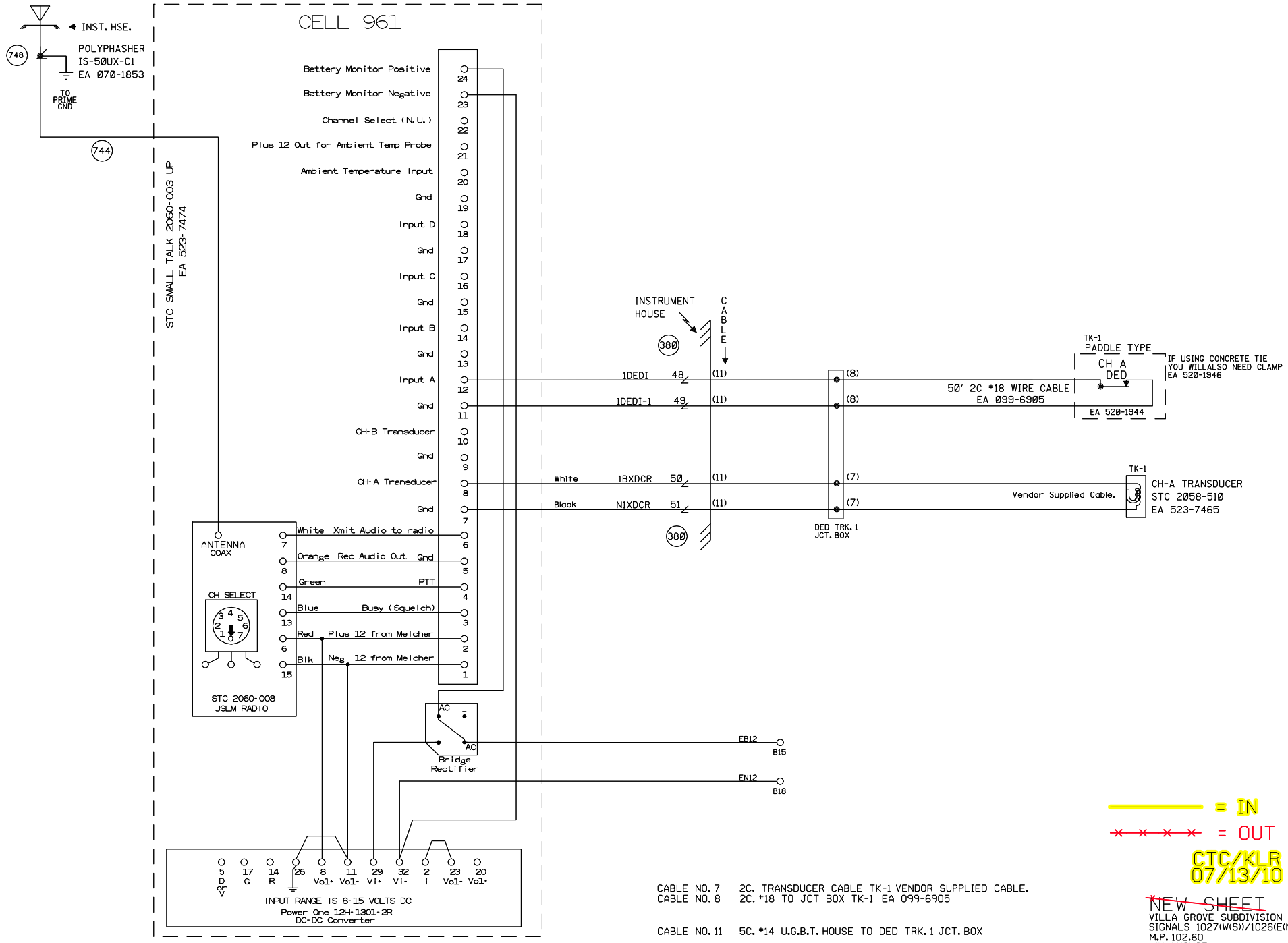

CABLE NO. 7 2C. TRANSDUCER CABLE TK-1 VENDOR SUPPLIED CABLE.
CABLE NO. 8 2C. #18 TO JCT BOX TK-1 EA 099-6905

CABLE NO. 11 5C. #14 U.G.B.T. HOUSE TO DED TRK. 1 JCT. BOX

Designed: 07/13/10
INSTALL FLS/GATES & CONSTANT WARNING AT TR 13 M.P. 101.40
Rec#: WO#: 05343
IS: RLT/ / /CTC/JTB

1 09-20-06
INSTALL EC5 BETWEEN GOODWINE & ELLIS M.P. 95.00 TO M.P. 108.54. PHASE II.
A.F.E. #87539
JJL / /CTC/RCB

MODIFICATION LEVEL	
Q. A. LAST LEVEL CHECKED	DP
LAST LEVEL MOD THIS TYPICAL	DP
LAST LEVEL BY DESIGNER	DP
CHANGED FROM TYPICAL?	Y

REV 02/26/07 1TESINTC.2PD

UNION PACIFIC
QUALITY PRODUCTIVITY SAFETY
SIGNAL DESIGN

DES:	CTC
DIG:	CTC
CHK:	JJL
A.F.E.	87539
ID= 030110260.2AS	

UNION PACIFIC RAILROAD

81ST STREET, ILLINOIS TO
VILLA GROVE, ILLINOIS
C.T.C. CIRCUITS

Office of AVP Engineering - Design Omaha, Nebraska

DATE 09-20-06
SHEET 2A
DWG 102.60
S-301

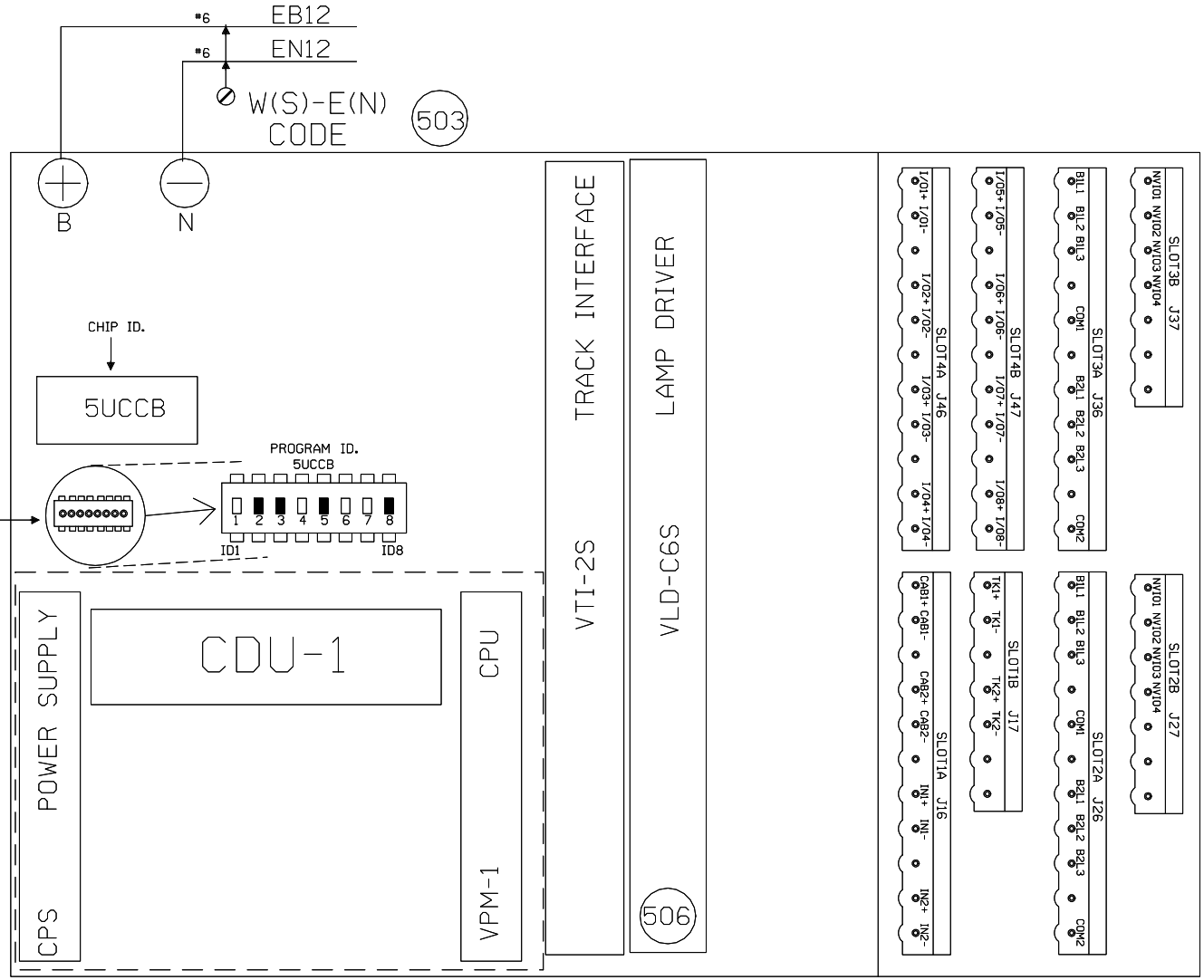

VITAL CONFIGURATION
PROGRAM SETTINGS

UCCB	TRUE
UCCBE	FALSE
UCCBW	FALSE
UCCBEW	FALSE

CODE 5
OPERATION SETTINGS

LC1SW	TRUE	L ALT-5	FALSE
LC5SW	FALSE	R ALT-5	FALSE
RC1SW	FALSE		
RC5SW	FALSE		

= IN

= OUT

CTC/KLR
07/13/10

~~NEW SHEET~~
VILLA GROVE SUBDIVISION
SIGNALS 1027(W(S))/1026(E(N))
M.P. 102.60
4'X4' HOUSE

Designed: 07/13/10
INSTALL FLS/GATES & CONSTANT WARNING AT TR 13
M.P. 101.40
Rec#: WO#: 05343
ISs: RLT / /CTC/JTB

1 09-20-06
INSTALL EC5 BETWEEN GOODWINE & ELLIS
M.P. 95.00 TO M.P. 108.54.
PHASE II.
A.F.E. #87539
JJL
/ /CTC/RCB

MODIFICATION LEVEL	
Q. A. LAST LEVEL CHECKED	DP
LAST LEVEL MOD THIS TYPICAL	DP
LAST LEVEL BY DESIGNER	DP
CHANGED FROM TYPICAL?	Y

REV 02/26/07 1TESINTC.3

UNION PACIFIC
QUALITY PRODUCTIVITY SAFETY
SIGNAL DESIGN

DES:	CTC
DIG:	CTC
CHK:	JJL
A.F.E.	87539
ID= 030110260.3S	

UNION PACIFIC RAILROAD

81ST STREET, ILLINOIS TO
VILLA GROVE, ILLINOIS
C.T.C. CIRCUITS

Office of AVP Engineering - Design Omaha, Nebraska

DATE 09-20-06
SHEET 3
DWG 102.60
S-301

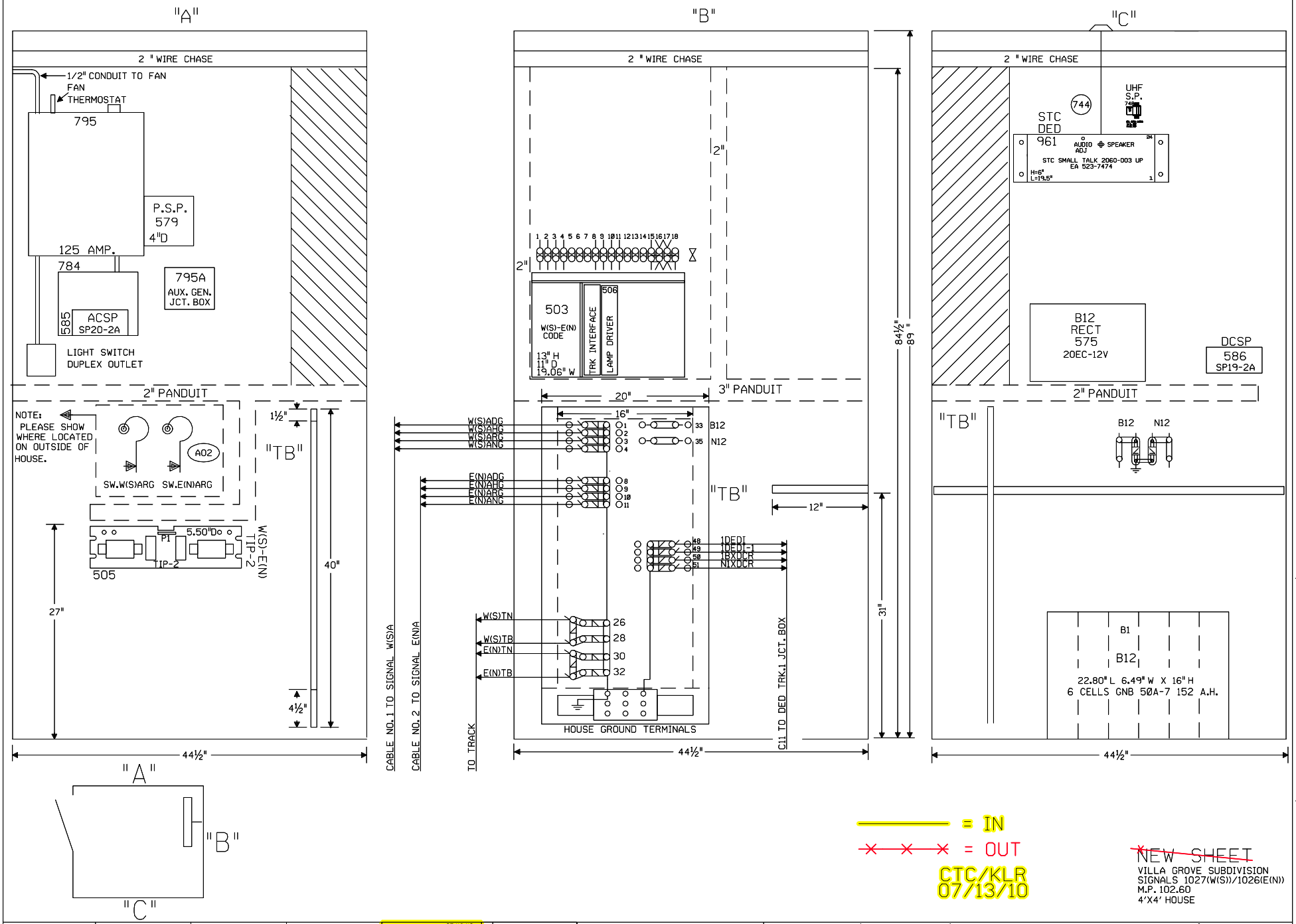

Designed: 07/13/10
INSTALL FLS/GATES & CONSTANT WARNING AT TR 13 M.P. 101.40
Rec#: 156 WO#: 05343 RLT / /CTC/JTB

1	09-20-06	INSTALL EC5 BETWEEN GOODWINE & ELLIS M.P. 95.00 TO M.P. 108.54. PHASE II. A.F.E. #87539	JJL / /CTC/RCB

MODIFICATION LEVEL	
Q.A. LAST LEVEL CHECKED	DP
LAST LEVEL MOD THIS TYPICAL	DP
LAST LEVEL BY DESIGNER	DP
CHANGED FROM TYPICAL?	Y

REV 02/26/07 1TE5INTC.4

UNION PACIFIC
QUALITY PRODUCTIVITY SAFETY
SIGNAL DESIGN

DES: CTC
DIG: CTC
CHK: JJL
A.F.E. 87539
ID= 030110260.4S

UNION PACIFIC RAILROAD

81ST STREET, ILLINOIS TO VILLA GROVE, ILLINOIS
C.T.C. CIRCUITS

Office of AVP Engineering - Design Omaha, Nebraska

DATE 09-20-06
SHEET 4
DWG 102.60
S-301