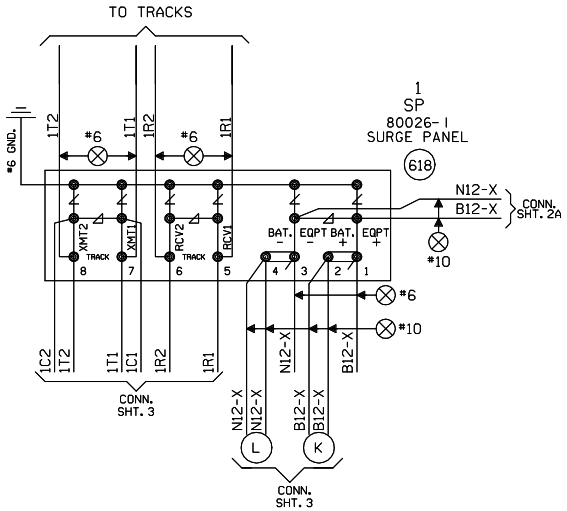

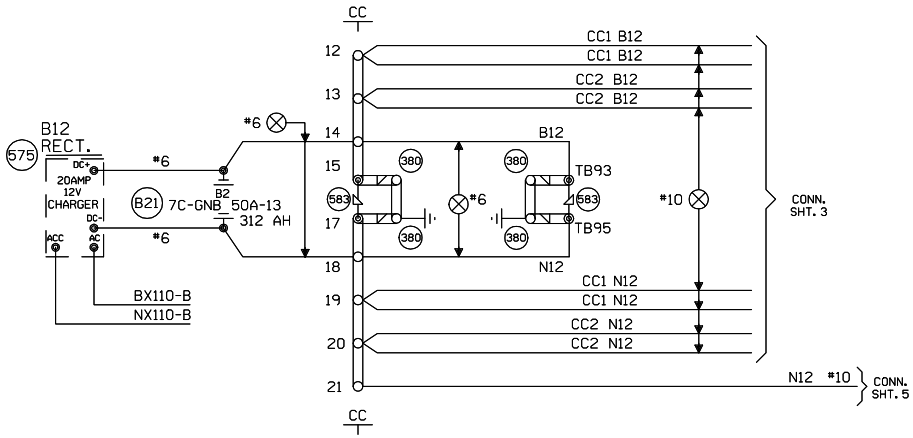

NEW SHEET

Designed: 07/13/10 INSTALL FLS/GATES & CONSTANT WARNING AT TR 13 M.P. 101.40 Rec#: WO#: 05343 IS: RLT / CTC/JTB	MODIFICATION LEVEL		UNION PACIFIC QUALITY PRODUCTIVITY SAFETY SIGNAL DESIGN	Date: 07/13/10 Des: CTC Chk: RLT AFE: 05343	UNION PACIFIC RAILROAD RANKIN, ILLINOIS TR 13 VILLA GROVE SUBDIVISION Office of Sr AVP Engineering - Signal/TCO Omaha, Nebraska	Sh.: 4 DOT 167205G MP: 101.40 ID: 030110140.4X
	Q. A. LAST LEVEL CHECKED	DT				
	LAST LEVEL MOD THIS TYPICAL	DT				
	LAST LEVEL BY DESIGNER	DT				
	CHANGED FROM TYPICAL? REV 05.24.10 4K 4TKSPGFC.4	Y				

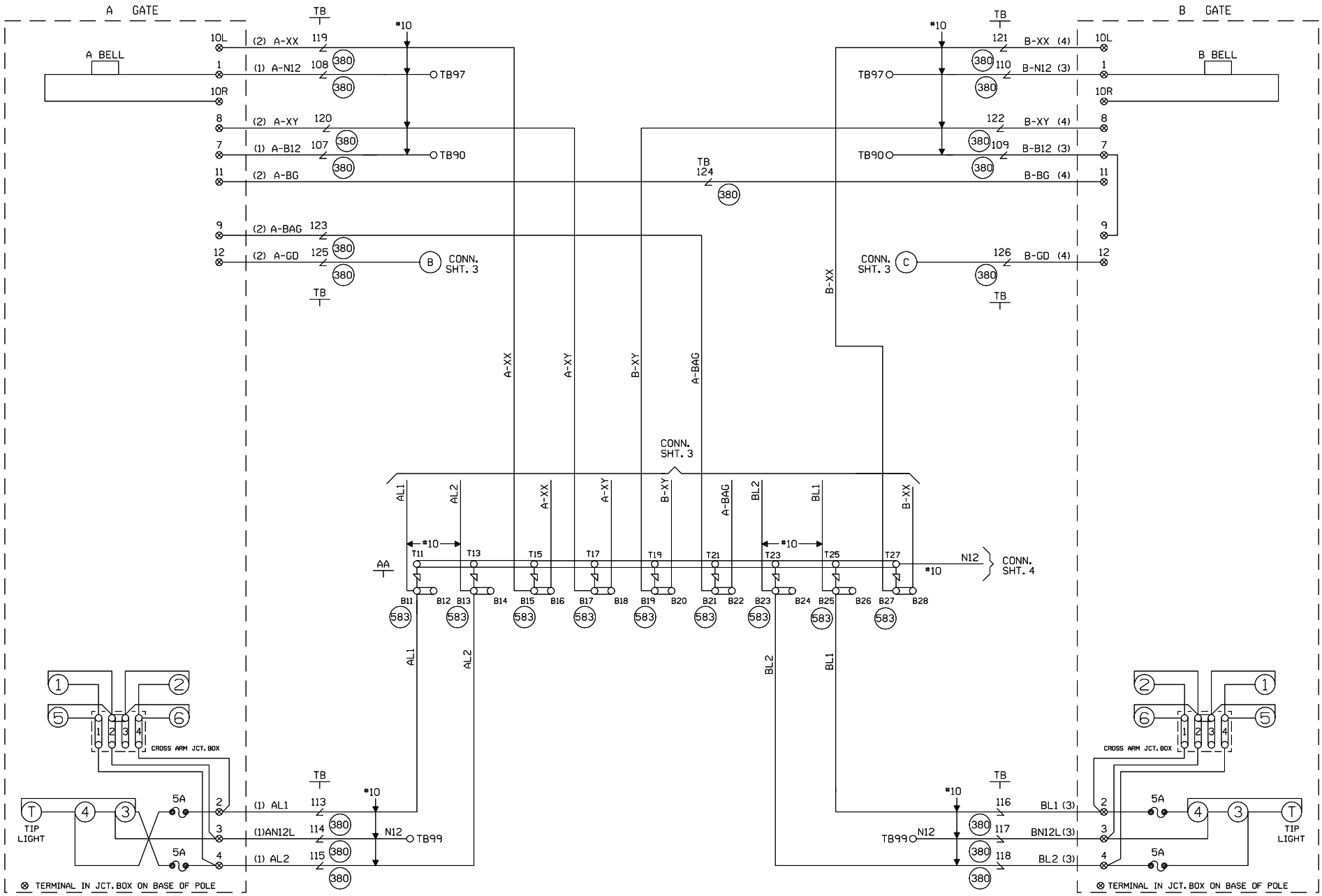

CABLE TABULATION

CABLE NO. 1 5C. NO.6 U.G.B.T. TO GATE A
CABLE NO. 2 7C. NO.14 U.G.B.T. TO GATE A
CABLE NO. 3 5C. NO.6 U.G.B.T. TO GATE B
CABLE NO. 4 7C. NO.14 U.G.B.T. TO GATE B

NEW SHEET

Designed: 07/13/10
INSTALL FLS/GATES & CONSTANT WARNING AT TR 13 M.P. 101.40
Rec#: 154 WO#: 05343 RLT/ /CTC/JTB

MODIFICATION LEVEL	
Q. A. LAST LEVEL CHECKED	DT
LAST LEVEL MOD THIS TYPICAL	DT
LAST LEVEL BY DESIGNER	DT
CHANGED FROM TYPICAL?	Y

REV 05.24.10 4K GFCTYP.5

UNION PACIFIC
QUALITY PRODUCTIVITY SAFETY
SIGNAL DESIGN

Date: 07/13/10
Des: CTC
Chk: RLT
AFE: 05343

UNION PACIFIC RAILROAD
RANKIN, ILLINOIS
TR 13
VILLA GROVE SUBDIVISION
Office of Sr AVP Engineering - Signal/TCO Omaha, Nebraska

Sh.: 5
DOT 167205G
MP: 101.40
ID: 030110140.5X

WCH 3593-E

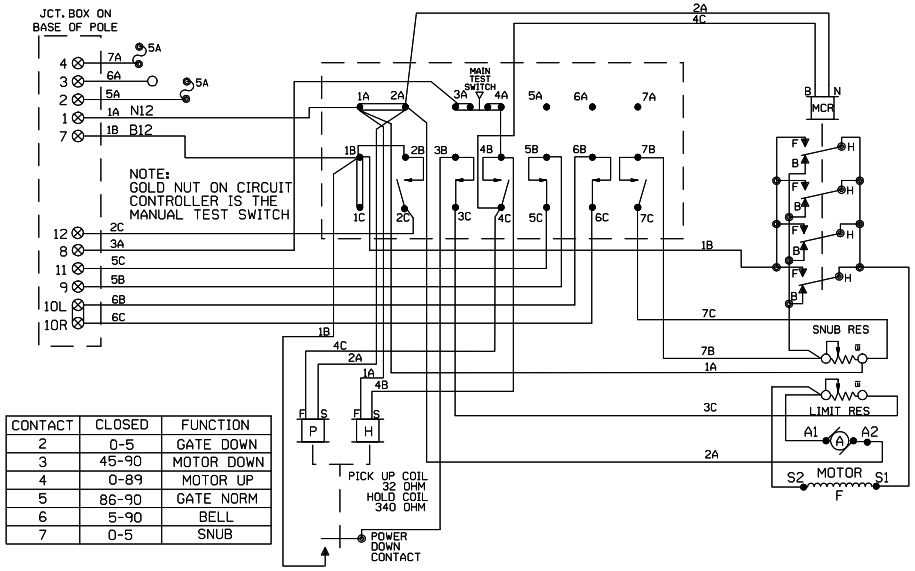

CONTACT	CLOSED	FUNCTION
2	0-5	GATE DOWN
3	45-90	MOTOR DOWN
4	0-89	MOTOR UP
5	86-90	GATE NORM
6	5-90	BELL
7	0-5	SNUB

WCH 3597-E

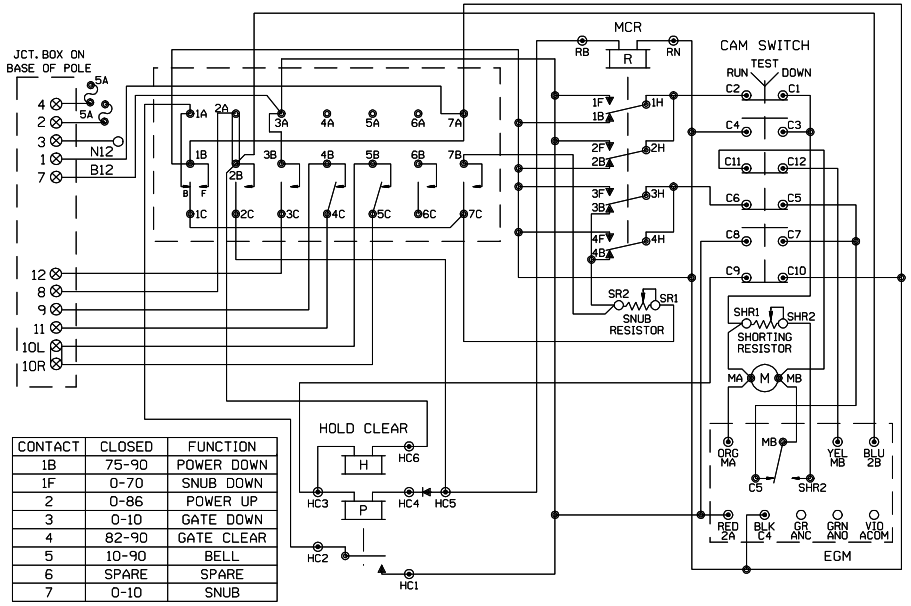

CONTACT	CLOSED	FUNCTION
1B	75-90	POWER DOWN
1F	0-70	SNUB DOWN
2	0-86	POWER UP
3	0-10	GATE DOWN
4	82-90	GATE CLEAR
5	10-90	BELL
6	SPARE	SPARE
7	0-10	SNUB

WCH 3597-RB

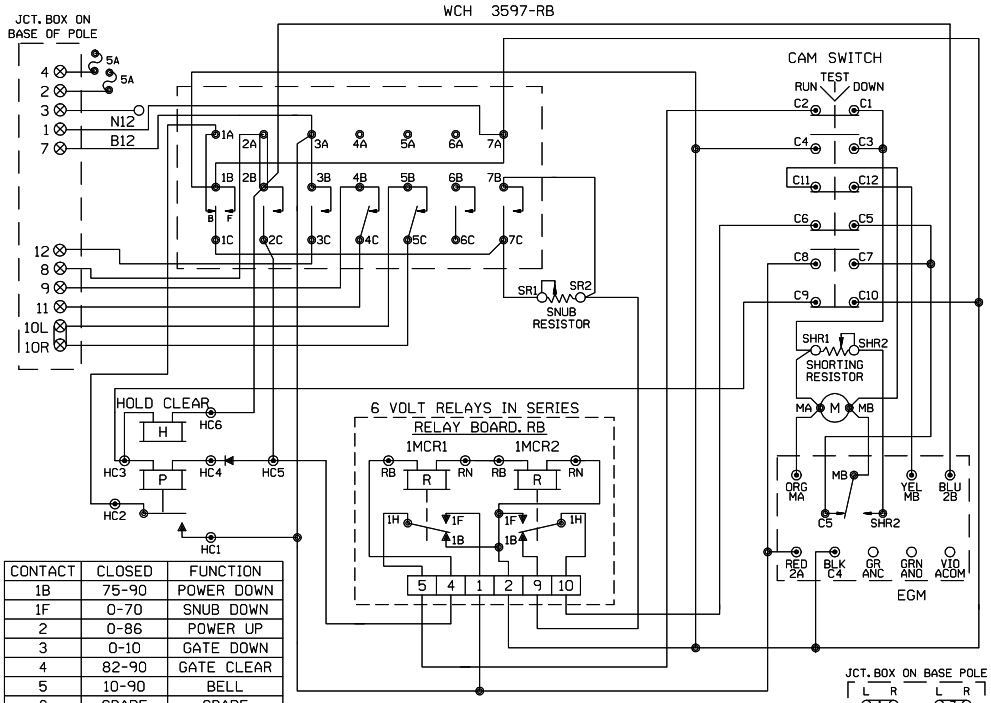

CONTACT	CLOSED	FUNCTION
1B	75-90	POWER DOWN
1F	0-70	SNUB DOWN
2	0-86	POWER UP
3	0-10	GATE DOWN
4	82-90	GATE CLEAR
5	10-90	BELL
6	SPARE	SPARE
7	0-10	SNUB

JCT. BOX ON BASE POLE

L	R	L	R
1	1	7	7
2	2	8	8
3	3	9	9
4	4	10	10
5	5	11	11
6	6	12	12

SHOW TYPE MECH. INSTALLED

ALL MECHANISMS SHOWN IN THE CLEAR POSITION

SAFETRAN S-60

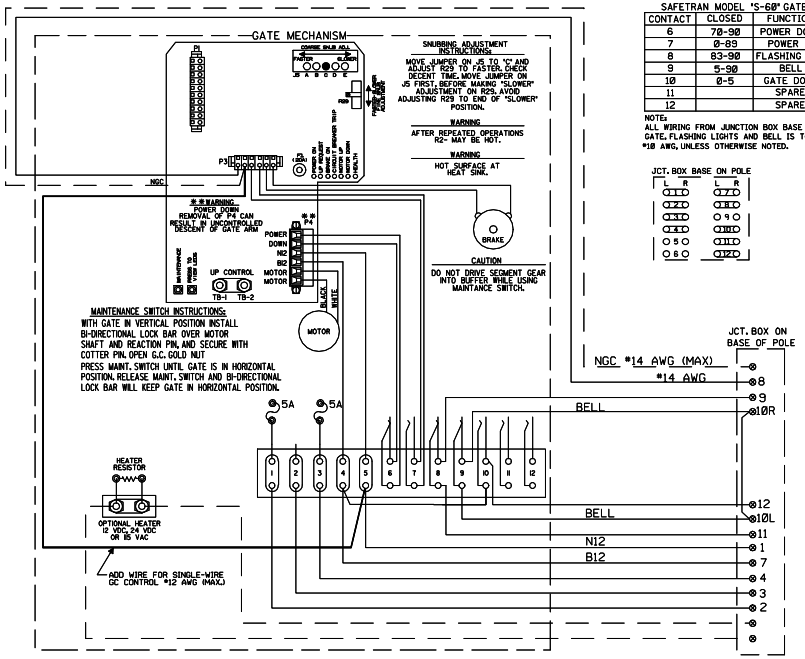

SAFETRAN MODEL 'S-60' GATE

CONTACT	CLOSED	FUNCTION
6	70-90	POWER DOWN
7	0-89	POWER UP
8	83-90	FLASHING LGT.
9	5-90	BELL
10	0-5	GATE DOWN
11		SPARE
12		SPARE

NOTE:
ALL WIRING FROM JUNCTION BOX BASE TO GATE, FLASHING LIGHTS AND BELL IS TO BE #10 AWG, UNLESS OTHERWISE NOTED.

JCT. BOX BASE ON POLE

L	R	L	R
1	1	7	7
2	2	8	8
3	3	9	9
4	4	10	10
5	5	11	11
6	6	12	12

NEW SHEET

Designed: 07/13/10
INSTALL FLS/GATES & CONSTANT WARNING AT TR 13 M.P. 101.40
Rec#: 154 WO#: 05343 RLT/ / CTC/JTB

MODIFICATION LEVEL	
Q.A. LAST LEVEL CHECKED	DT
LAST LEVEL MOD THIS TYPICAL	DT
LAST LEVEL BY DESIGNER	DT
CHANGED FROM TYPICAL?	N

REV 05.24.10 4K GWIRING.7

UNION PACIFIC — QUALITY PRODUCTIVITY SAFETY — SIGNAL DESIGN

Date: 07/13/10
Des: CTC
Chk: RLT
AFE: 05343

UNION PACIFIC RAILROAD
RANKIN, ILLINOIS
TR 13
VILLA GROVE SUBDIVISION
Office of Sr AVP Engineering - Signal/TCO Omaha, Nebraska

Sh.: 6
DOT 167205G
MP: 101.40
ID: 030110140.6X

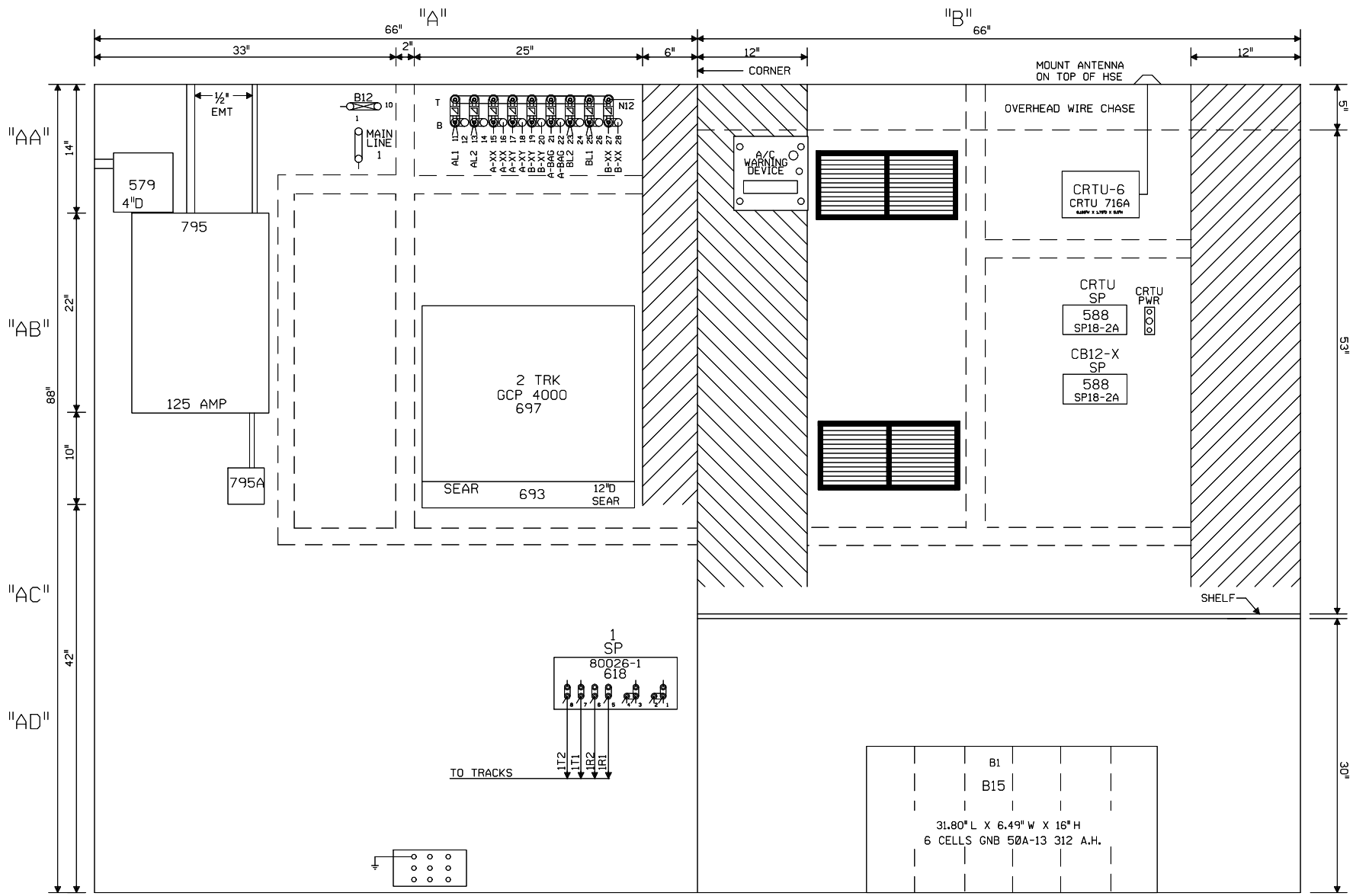

NOTE: ALL DIMENSIONS SHOWN
ARE APPROXIMATE.

NEW SHEET

Designed: 07/13/10
INSTALL FLS/GATES & CONSTANT WARNING AT TR 13 M.P. 101.40
Rec#: WO#: 05343
IS: RLT / /CTC/JTB

MODIFICATION LEVEL	
Q. A. LAST LEVEL CHECKED	DT
LAST LEVEL MOD THIS TYPICAL	DT
LAST LEVEL BY DESIGNER	DT
CHANGED FROM TYPICAL?	Y

REV 05.24.10 4K 4TKGFC.8

UNION PACIFIC
QUALITY PRODUCTIVITY SAFETY
SIGNAL DESIGN

Date:	07/13/10
Des:	CTC
Chk:	RLT
AFE:	05343

UNION PACIFIC RAILROAD
RANKIN, ILLINOIS
TR 13
VILLA GROVE SUBDIVISION
Office of Sr AVP Engineering - Signal/TCO Omaha, Nebraska

Sh.:	7
DOT	167205G
MP:	101.40
ID:	030110140.7X

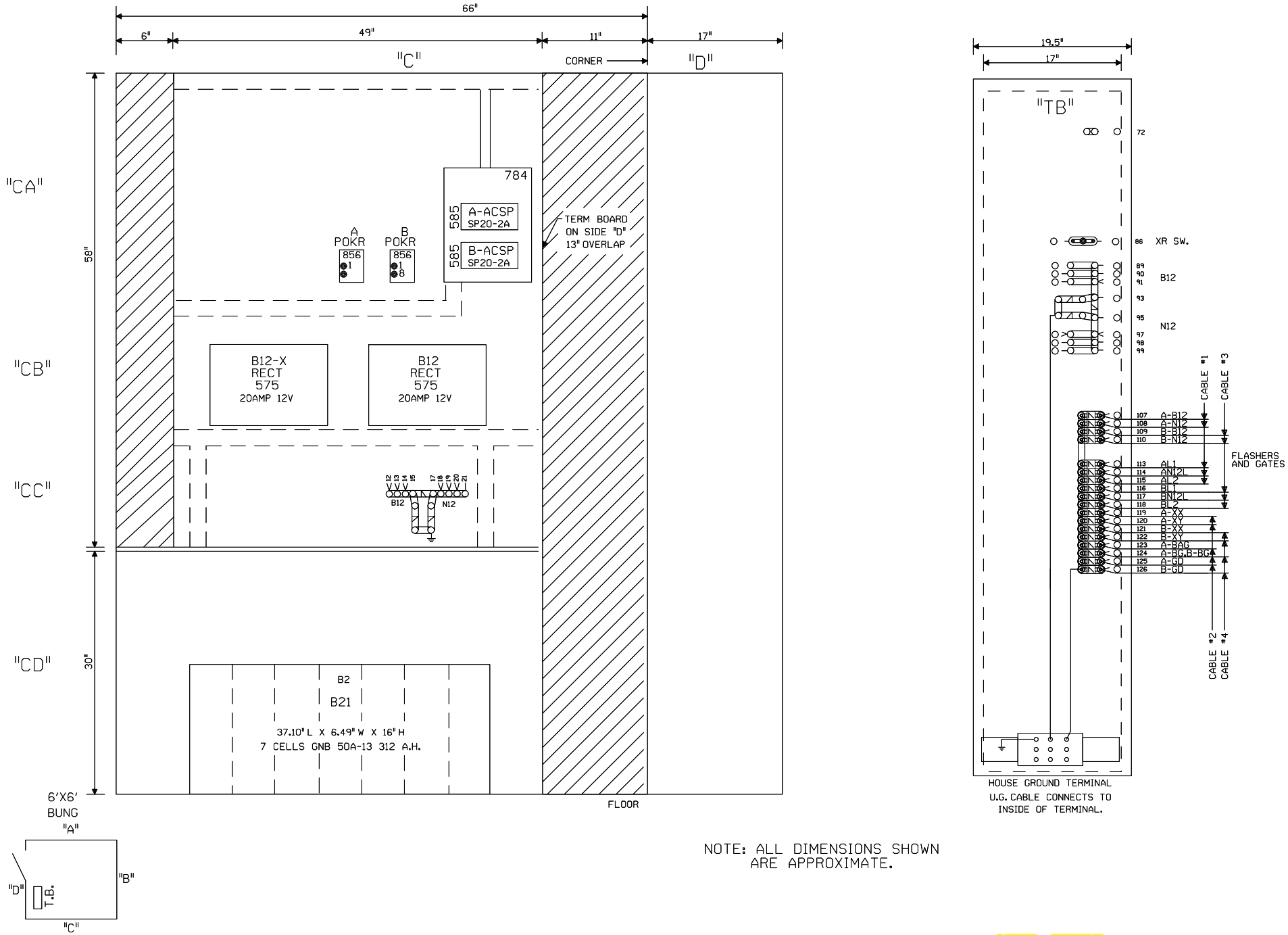

NOTE: ALL DIMENSIONS SHOWN
ARE APPROXIMATE.

NEW SHEET

Designed: 07/13/10 INSTALL FLS/GATES & CONSTANT WARNING AT TR 13 M.P. 101.40 Rec#: WO#: 05343 IS: RLT / / CTC/JTB	MODIFICATION LEVEL		UNION PACIFIC QUALITY PRODUCTIVITY SAFETY SIGNAL DESIGN	Date: 07/13/10 Des: CTC Chk: RLT AFE: 05343	UNION PACIFIC RAILROAD RANKIN, ILLINOIS TR 13 VILLA GROVE SUBDIVISION Office of Sr AVP Engineering - Signal/TCO Omaha, Nebraska	Sh.: 8 DOT 167205G MP: 101.40 ID: 030110140.8X
	Q. A. LAST LEVEL CHECKED	DT				
	LAST LEVEL MOD THIS TYPICAL	DT				
	LAST LEVEL BY DESIGNER	DT				
	CHANGED FROM TYPICAL?	Y				
	REV 05.24.10 4K GFC.9					

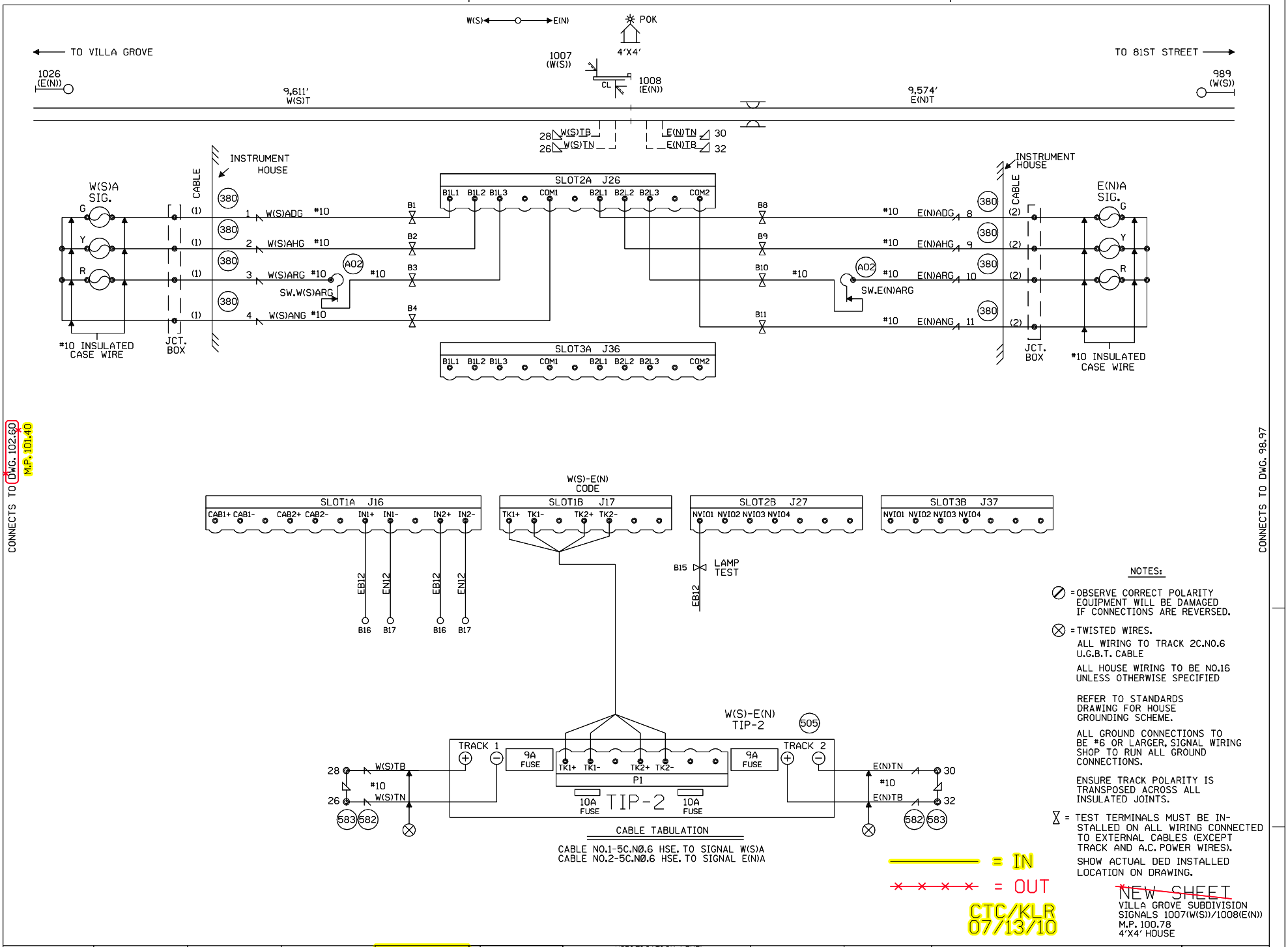

NOTES:

⊘ = OBSERVE CORRECT POLARITY EQUIPMENT WILL BE DAMAGED IF CONNECTIONS ARE REVERSED.

⊗ = TWISTED WIRES.
ALL WIRING TO TRACK 2C.NO.6 U.G.B.T. CABLE
ALL HOUSE WIRING TO BE NO.16 UNLESS OTHERWISE SPECIFIED

REFER TO STANDARDS DRAWING FOR HOUSE GROUNDING SCHEME.

ALL GROUND CONNECTIONS TO BE #6 OR LARGER, SIGNAL WIRING SHOP TO RUN ALL GROUND CONNECTIONS.

ENSURE TRACK POLARITY IS TRANSPOSED ACROSS ALL INSULATED JOINTS.

⧖ = TEST TERMINALS MUST BE INSTALLED ON ALL WIRING CONNECTED TO EXTERNAL CABLES (EXCEPT TRACK AND A.C. POWER WIRES).

SHOW ACTUAL DED INSTALLED LOCATION ON DRAWING.

~~NEW SHEET~~
VILLA GROVE SUBDIVISION
SIGNALS 1007(W(S))/1008(E(N))
M.P. 100.78
4'X4' HOUSE

Designed: 07/13/10 INSTALL FLS/GATES & CONSTANT WARNING AT TR 13 M.P. 101.40 Rec#: WO#: 05343 IS: RLT / /CTC/JTB	1 09-20-06 INSTALL EC5 BETWEEN GOODWINE & ELLIS M.P. 95.00 TO M.P. 108.54. PHASE II. A.F.E. #87539 JJL / /CTC/RCB	MODIFICATION LEVEL Q. A. LAST LEVEL CHECKED DP LAST LEVEL MOD THIS TYPICAL DP LAST LEVEL BY DESIGNER DP CHANGED FROM TYPICAL? Y REV 02/26/07 1TE5INTC.1	UNION PACIFIC QUALITY PRODUCTIVITY SAFETY SIGNAL DESIGN	DES: CTC DIG: CTC CHK: JJL A.F.E. 87539 ID= 030110078.1S	UNION PACIFIC RAILROAD 81ST STREET, ILLINOIS TO VILLA GROVE, ILLINOIS C.T.C. CIRCUITS Office of AVP Engineering - Design Omaha, Nebraska	DATE 09-20-06 SHEET 1 DWG 100.78 S-301

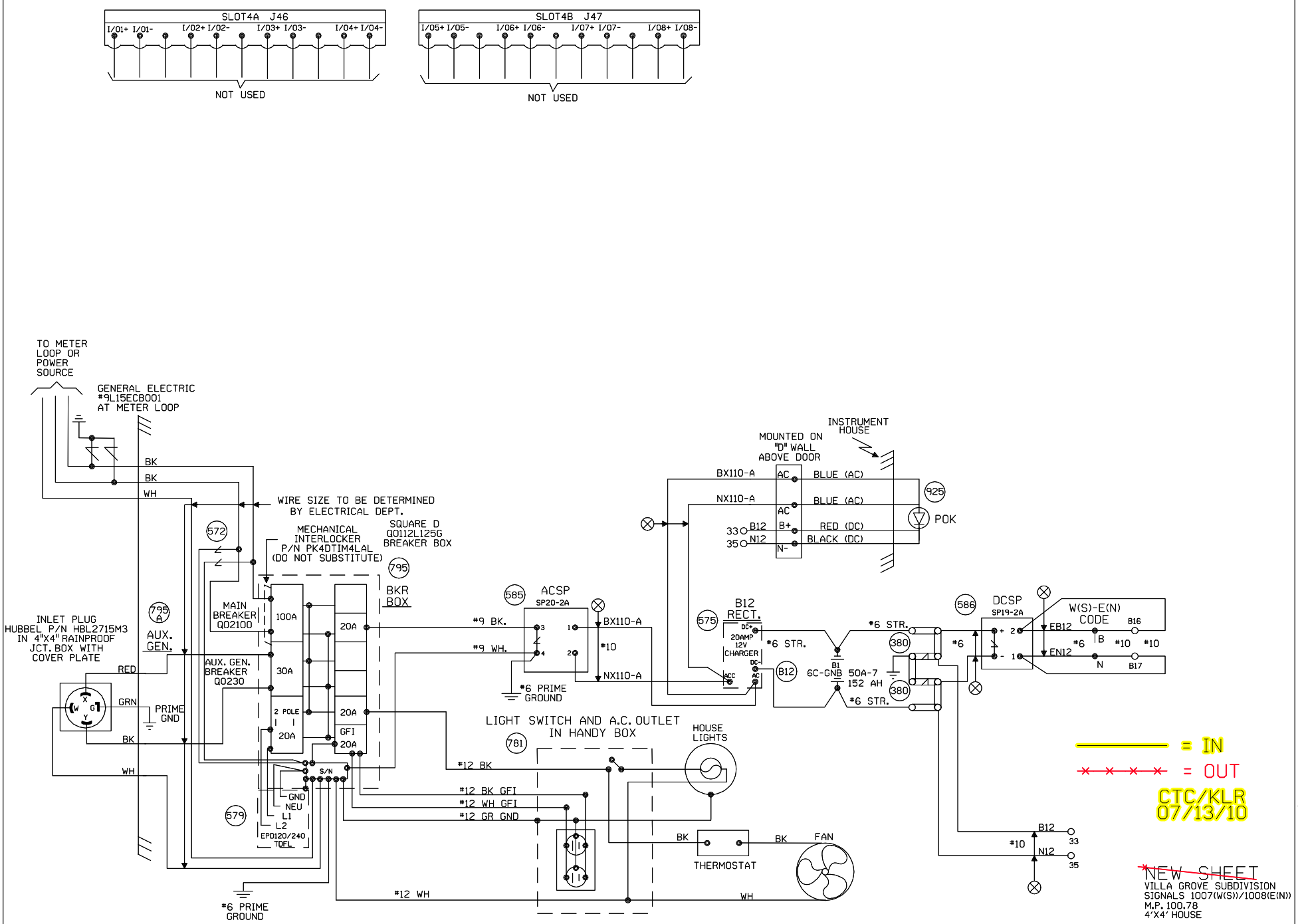

				Designed: 07/13/10 INSTALL FLS/GATES & CONSTANT WARNING AT TR 13 M.P. 101.40 Rec#: WO#: 05343 IS: RLT / /CTC/JTB	1 09-20-06 INSTALL EC5 BETWEEN GOODWINE & ELLIS M.P. 95.00 TO M.P. 108.54. PHASE II. A.F.E. #87539 JJL / /CTC/RCB	MODIFICATION LEVEL Q. A. LAST LEVEL CHECKED DP LAST LEVEL MOD THIS TYPICAL DP LAST LEVEL BY DESIGNER DP CHANGED FROM TYPICAL? Y REV 02/26/07 1TE5INTC.2	UNION PACIFIC QUALITY PRODUCTIVITY SAFETY SIGNAL DESIGN	DES: CTC DIG: CTC CHK: JJL A.F.E. 87539 ID= 030110078.2S	UNION PACIFIC RAILROAD 81ST STREET, ILLINOIS TO VILLA GROVE, ILLINOIS C.T.C. CIRCUITS Office of AVP Engineering - Design Omaha, Nebraska	DATE 09-20-06 SHEET 2 DWG 100.78 S-301

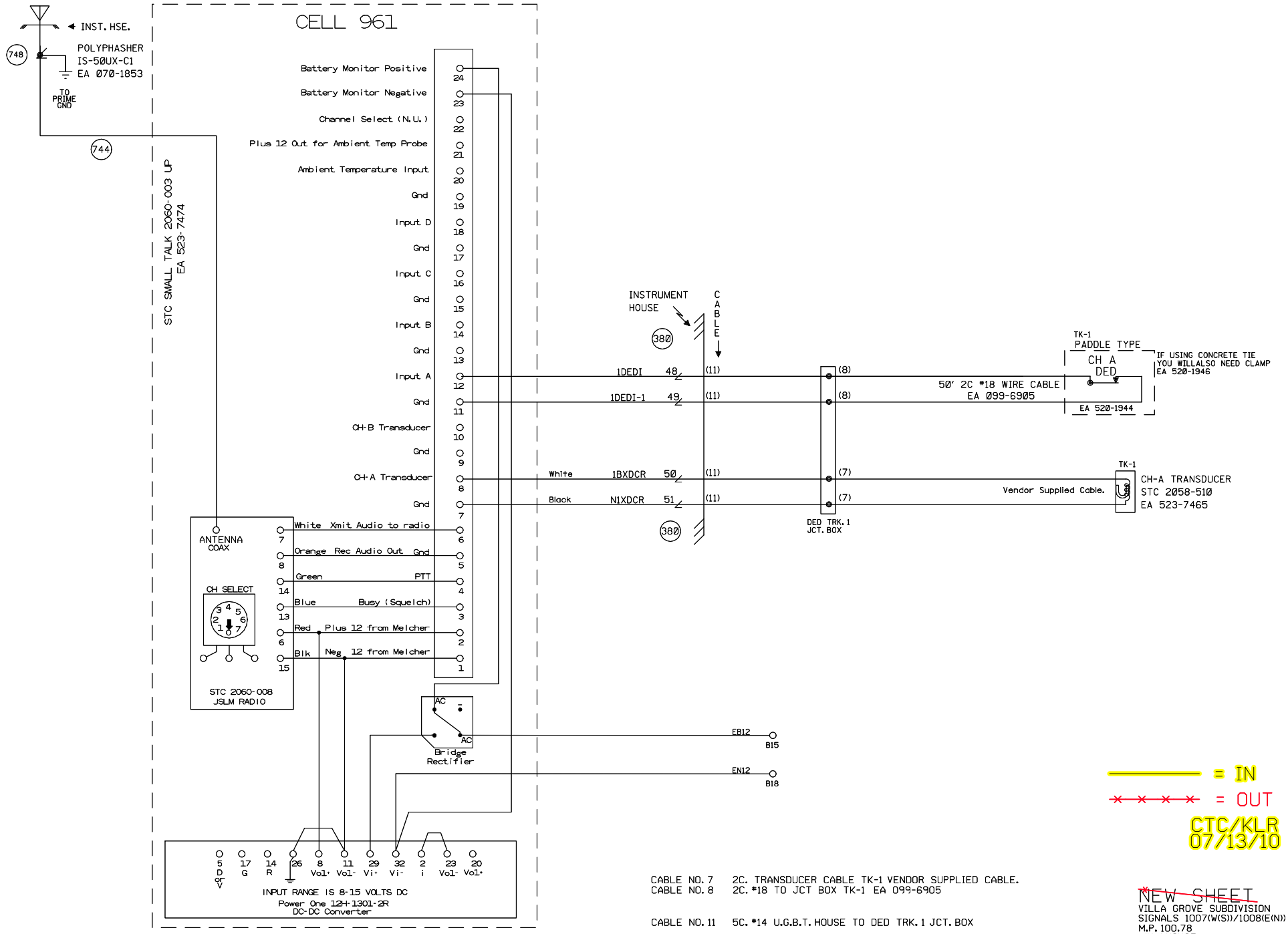

CABLE NO. 7 2C. TRANSDUCER CABLE TK-1 VENDOR SUPPLIED CABLE.
CABLE NO. 8 2C. #18 TO JCT BOX TK-1 EA 099-6905

CABLE NO. 11 5C. #14 U.G.B.T. HOUSE TO DED TRK. 1 JCT. BOX

~~NEW SHEET~~
VILLA GROVE SUBDIVISION
SIGNALS 1007(W(S))/1008(E(N))
M.P. 100.78
4'X4' HOUSE

Designed: 07/13/10 INSTALL FLS/GATES & CONSTANT WARNING AT TR 13 M.P. 101.40 Rec#: WO#: 05343 IS: RLT/ /CTC/JTB	1 09-20-06 INSTALL EC5 BETWEEN GOODWINE & ELLIS M.P. 95.00 TO M.P. 108.54. PHASE II. A.F.E. #87539 JJL /CTC/RCB	MODIFICATION LEVEL		UNION PACIFIC QUALITY PRODUCTIVITY SAFETY SIGNAL DESIGN	DES: CTC DIG: CTC CHK: JJL A.F.E. 87539 ID= 030110078.2AS	UNION PACIFIC RAILROAD 81ST STREET, ILLINOIS TO VILLA GROVE, ILLINOIS C.T.C. CIRCUITS Office of AVP Engineering - Design Omaha, Nebraska	DATE 09-20-06 SHEET 2A DWG 100.78 S-301
		Q.A. LAST LEVEL CHECKED	DP				
		LAST LEVEL MOD THIS TYPICAL	DP				
		LAST LEVEL BY DESIGNER	DP				
		CHANGED FROM TYPICAL? REV 02/26/07 1TE5INTC.2PD	Y				