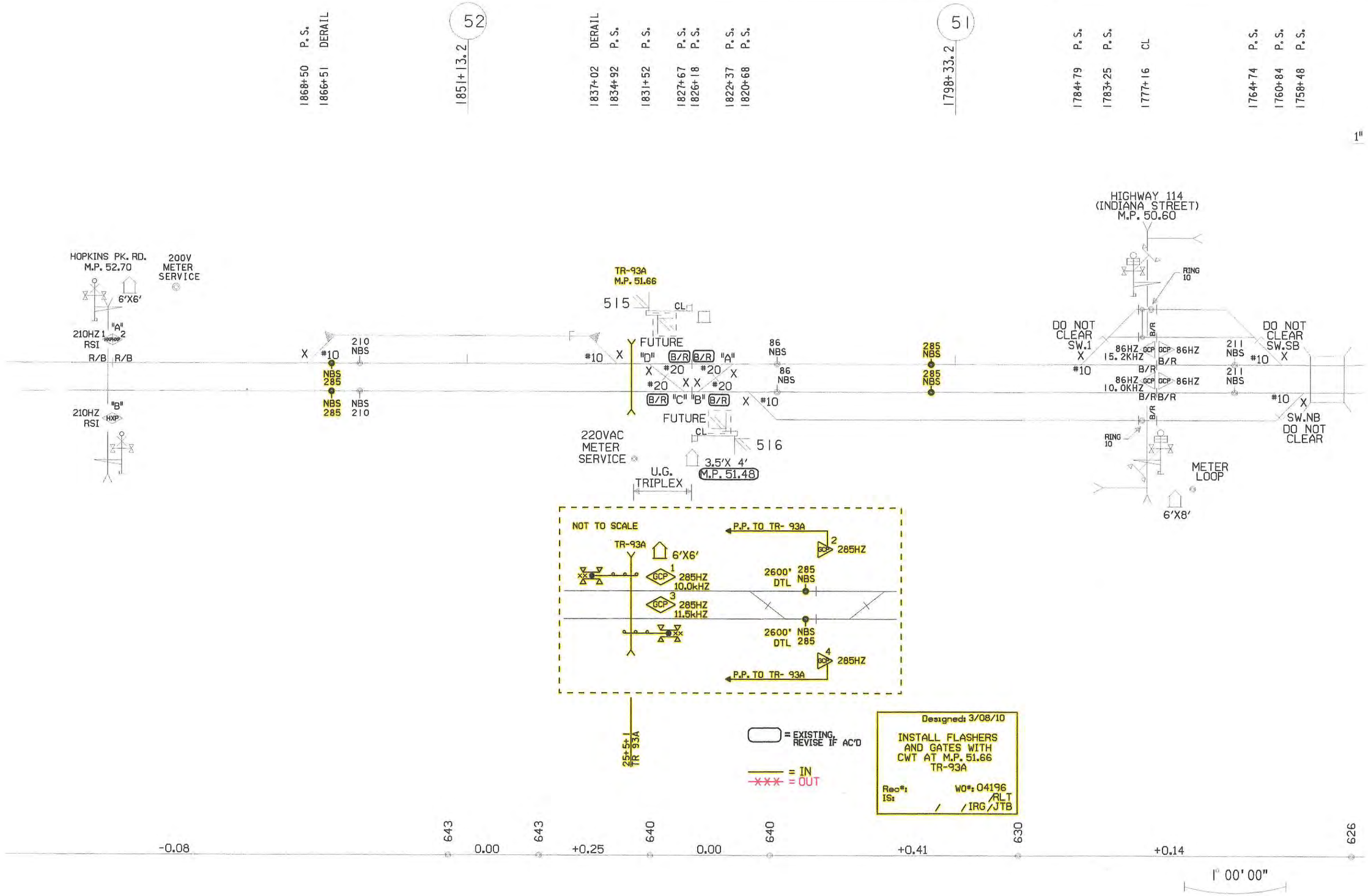
1868+50 P.S.
1866+51 DERAIL
52
1851+13.2
1837+02 DERAIL
1834+92 P.S.
1831+52 P.S.
1827+67 P.S.
1826+18 P.S.
1822+37 P.S.
1820+68 P.S.
51
1798+33.2
1784+79 P.S.
1783+25 P.S.
1777+16 CL
1764+74 P.S.
1760+84 P.S.
1758+48 P.S.
1"
HOPKINS PK. RD.
M.P. 52.70
200V
METER
SERVICE
6'X6'
210HZ 1 "A" 2
RSI
R/B R/B
210HZ "B"
RSI
X #10
210
NBS
NBS
285
NBS
285
NBS
210
TR-93A
M.P. 51.66
515
CL
FUTURE
"D" B/R B/R "A"
#10 X
X #20 #20 X
#20 X X #20
B/R "C" "B" B/R X #10
FUTURE
CL
516
220VAC
METER
SERVICE
3.5'X 4'
M.P. 51.48
U.G.
TRIPLEX
86
NBS
86
NBS
285
NBS
285
NBS
HIGHWAY 114
(INDIANA STREET)
M.P. 50.60
RING
10
DO NOT
CLEAR
SW.1
X
#10
86HZ GCP 86HZ
15.2KHZ
B/R
86HZ GCP 86HZ
10.0KHZ
B/R B/R
211
NBS
211
NBS
DO NOT
CLEAR
SW.SB
X
#10
#10 X
SW.NB
DO NOT
CLEAR
RING
10
METER
LOOP
6'X8'
NOT TO SCALE
TR-93A
6'X6'
P.P. TO TR- 93A
2
GCP 285HZ
1
GCP 285HZ
10.0kHZ
3
GCP 285HZ
11.5kHZ
2600' 285
DTL NBS
2600' NBS
DTL 285
4
GCP 285HZ
P.P. TO TR- 93A
25+51
TR 93A
= EXISTING,
REVISE IF AC'D
= IN
= OUT
Designed: 3/08/10
INSTALL FLASHERS
AND GATES WITH
CWT AT M.P. 51.66
TR-93A
Rec#:
WO#: 04196
/RLT
IS:
/ /IRG/JTB
-0.08
643
0.00
643
+0.25
640
0.00
640
+0.41
630
+0.14
626
1° 00' 00"

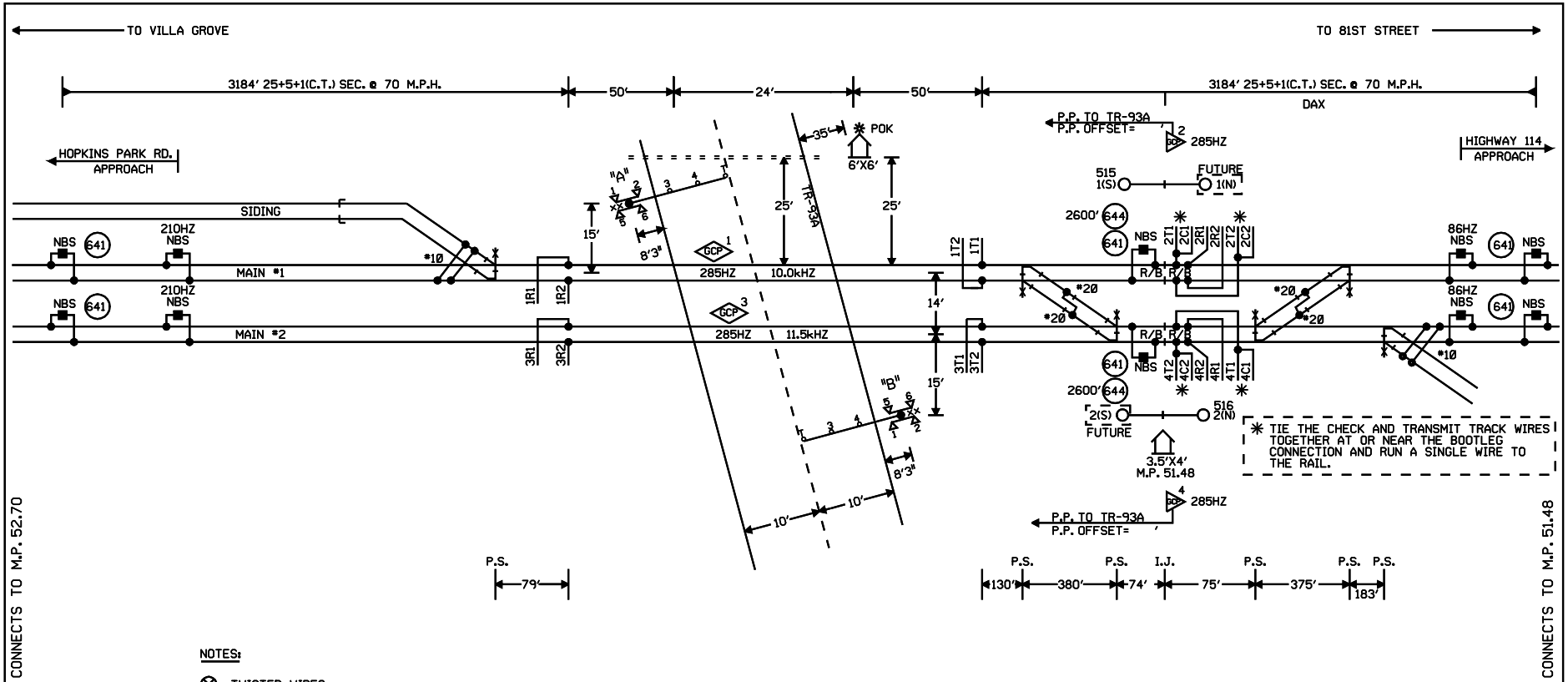

NOTES:

⊗= TWISTED WIRES
INSULATED 1 TWIST PER FT.
ALL TRACK WIRES 2C. #6

TRANSMITTER AND RECEIVER LEADS TO BE SEPARATED BY AT LEAST 12" IN TRENCH, LENGTHS SHOULD NOT EXCEED MANUFACTURES RECOMMENDATION.

TOP OF FOUNDATION TO BE AT SAME ELEVATION AS THE SURFACE OF THE TRAVELED WAY & NO MORE THAN 4" ABOVE THE SURFACE OF THE GROUND.

ALL BUNGALOW WIRING TO BE #16 AWG FLEX UNLESS OTHERWISE SPECIFIED EXCEPT ALL GROUND WIRE TO BE #6 AWG FLEX OR LARGER.

ALL WIRING IN GATE MECHANISM TO BE #10 "AWG FLEX".

REFER TO UP STANDARD DWG FOR BUNGALOW GROUNDING.

PORTABLE GENERATOR EXTENSION CORD FOR 240V TO 240V IS PROVIDED AS WELL AS A 120V TO 240V ADAPTER.

ALL LIGHTS TO BE 12" ROUNDELS.

= = = = = = 4" X 40' CONDUIT

LIGHTS: LED LIGHTS

GATE A: 18'
GATE B: 18'

xx = BELL

W(S) ←—○—→ E(N)

NEW SHEET

Designed: 3/08/10 INSTALL FLASHERS AND GATES WITH CWT AT M.P. 51.66 TR-93A Rec#: WO#: 04196 IS: /RLT /IRG/JTB	MODIFICATION LEVEL		UNION PACIFIC QUALITY PRODUCTIVITY SAFETY SIGNAL DESIGN	Date: 03/08/10 Des: IRG Chk: RLT AFE: 04196	UNION PACIFIC RAILROAD MOMENCE, ILLINOIS TR-93A VILLA GROVE SUBDIVISION Office of Sr AVP Engineering - Signal/TCO Omaha, Nebraska	Sh.: 1 DOT 167538H MP: 51.66 ID: 03005166.1X
	Q. A. LAST LEVEL CHECKED	DS				
	LAST LEVEL MOD THIS TYPICAL	DS				
	LAST LEVEL BY DESIGNER	DS				
	CHANGED FROM TYPICAL?	Y				
	REV 09.02.09 4K 2TKUGTYP.1					

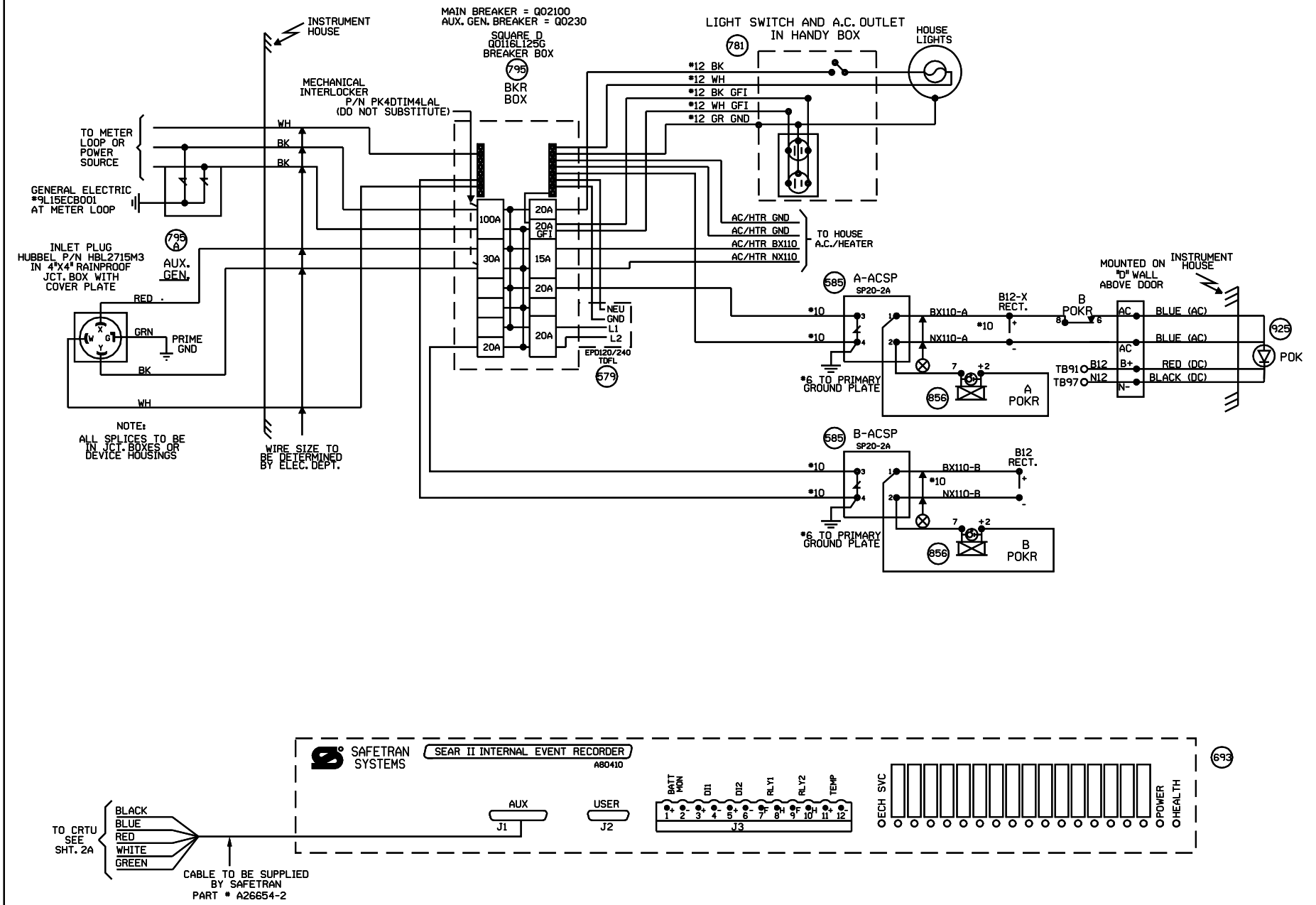

NEW SHEET

Designed: 3/08/10 INSTALL FLASHERS AND GATES WITH CWT AT M.P. 51.66 TR-93A Rec#: WO#: 04196 IS: /RLT /IRG/JTB	MODIFICATION LEVEL Q.A. LAST LEVEL CHECKED DS LAST LEVEL MOD THIS TYPICAL DS LAST LEVEL BY DESIGNER DS CHANGED FROM TYPICAL? N REV 09.02.09 4K SEARAC.2	UNION PACIFIC QUALITY PRODUCTIVITY SAFETY SIGNAL DESIGN	Date: 03/08/10 Des: IRG Chk: RLT AFE: 04196	UNION PACIFIC RAILROAD MOMENCE, ILLINOIS TR-93A VILLA GROVE SUBDIVISION Office of Sr AVP Engineering - Signal/TCO Omaha, Nebraska	Sh.: 2 DOT 167538H MP: 51.66 ID: 03005166.2X

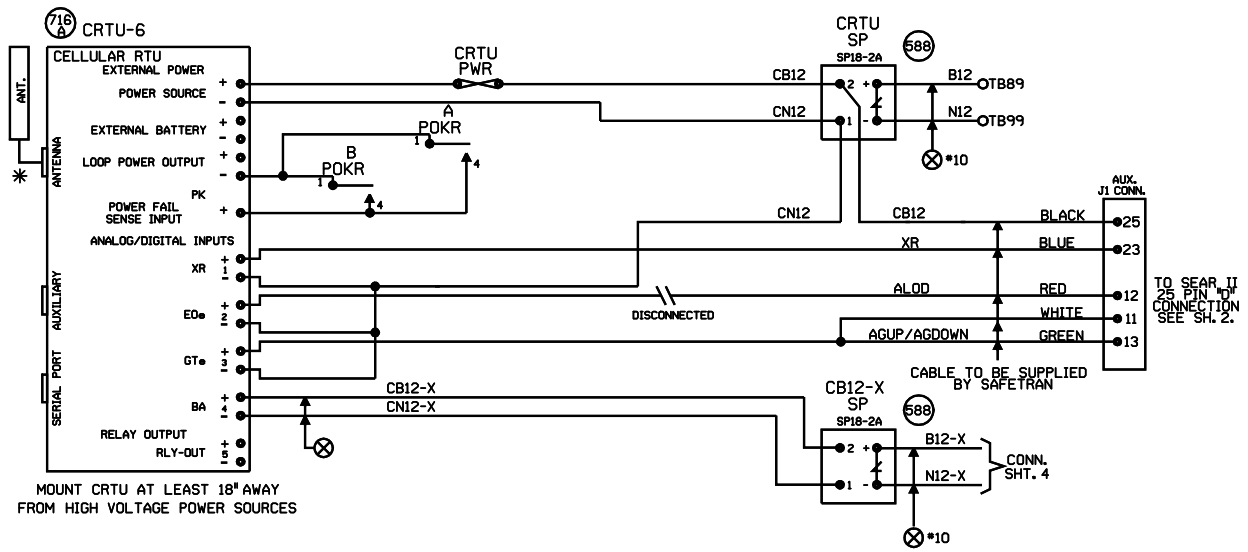

NOTES:

ALL DIODES 1N5060 OR 1N4004 UNLESS OTHERWISE NOTED.

✳ MOUNT ANTENNA ON TOP OF HOUSE.
INSTALL ANTENNA CABLE AND CHOKE PER TECH BULLENTIN #99-0015-00

ALL WIRES #18 UNLESS OTHERWISE NOTED.

ALL UNUSED 'NC' INPUTS MUST BE TIED HIGH TO BATTERY

ALL UNUSED ANALOG INPUTS MUST BE TIED HIGH TO BATTERY

ALL UNUSED 'NO' INPUTS MUST BE DISCONNECTED

NORMAL STATE FOR ANALOG CHANNELS IS EQUAL TO THE STORED NOMINAL VOLTAGE +120% OR -81%

CRTU FRONT PANEL DISPLAY CHART INDICATES NORMAL STATE

■ DIGITAL INPUT HIGH, OR POWER FAIL INPUT CLOSED ☐ DIGITAL INPUT LOW, OR POWER FAIL INPUT OPEN

■ L ← LATCH IS SET BECAUSE CRTU DETECTED AN ALARM CONDITION
12.06V L ←

'sRUN MODE' 'sRUN MODE-SILENT'
CRTU RADIO IS DISABLED. REPROGRAM CRTU WITH LAPTOP.

ANALOG AND AC INPUT MODULES AND SURGE PROTECTORS MUST BE MOUNTED LESS THAN 18" FROM CRTU

ANALOG MODULES CONVERT DC VOLTAGE TO A SQUARE WAVE. A WORKING ANALOG MODULE WILL HAVE 4.5VDC TO 8.0VDC BETWEEN 5VOUT+ AND 6VOUT-. WHERE, 0VOLTS = 0HZ OUT, 30VOLTS = 10KHZ OUT, AND 15VOLTS = 5KHZ OUT

MAKE SURE CRTU IS PROGRAMMED WITH CALIBRATION SETTINGS.

CRTU CH4 CAN BE CONNECTED TO EITHER SP18 OR EQUIPMENT SIDE OF MDSA1, TAB 565

UNIT INSTALLATION AND SETUP

R.R. SITE ID WHERE: SSSS = 4 CHARACTER SUBDIVISION ID. FILL WITH PRECEDING ZEROS AS REQUIRED. THE MAIN TRACK SUBDIVISION ID# IS IN THE CURRENT TIMETABLE. INDUSTRIAL LEADS, LEASED, AND LEAD TRACKS LISTED WITHIN THE SUBDIVISION MAY HAVE THEIR OWN UNIQUE SUBDIVISION ID#. ALWAYS REFER TO CURRENT PRINTED COPY OF THE TIMETABLE.
LLLLLLLL = 8 CHARACTERS USE DOT# AT CROSSINGS, AND
WDLLLLLL = USE 'WD' THEN MP# AT WAYSIDE LOCATIONS.
EXAMPLE = 0785WD1801.5UT
HBLLLLLL = USE 'HB' THEN MP# AT HBD SITES.
EXAMPLE = 0100-HB55.62TX
THE MP# MUST USE A DECIMAL POINT TO SEPARATE NUMBERS. FILL WITH PRECEDING DASHES AS REQUIRED.
AA = 2 CHARACTER STATE NAME FOR ALL LOCATIONS.
MUST BE 14 CHARACTERS LONG, NO SPACES ALLOWED.

SITE IDENTIFIER: SSSSLLLLLLLLAA	0040167538HIL
OPERATION TO RESUME: RUN	
SIGNAL STRENGTH dBm	
CARRIER ID	
FIRMWARE VERSION	2.3.
SERIAL NUMBER	
BOOT VERSION:	
CMM VERSION:	
MIN ASSIGNMENT	
ESN: (MICROBURST ONLY)	
CONFIGURATION NET	
SILENCE INTERVAL	60 MINUTES
HEALTHCHECK INTERVAL	EVERY 2 DAYS
ALARM DEFER DELAY	240 MINUTES (4 HOURS)
SIGNAL STATUS	
SCADANET STATUS	
CALIBRATION CONSTANT CH1	
CALIBRATION CONSTANT CH2	
CALIBRATION CONSTANT CH3	
CALIBRATION CONSTANT CH4	
CALIBRATION CONSTANT PS	

FIELD PROVIDES: SAMPLED NOMINAL VOLTAGES, SCADANET STATUS CALIBRATION CONSTANTS, SERIAL NUMBER, AND SIGNAL STATUS.

CHANNEL SETUP - STANDARD CONFIGURATION 32:XR,EOe,GTe,Ba

CHANNEL NORMAL STATE	SENSE (NO/NC)	NAME FUNCTION	RECOGNITION DELAY SECONDS ACTIVE	RECOGNITION DELAY SECONDS NORMAL	RETURN TO NORMAL	REPORTING MODE	ALARM LINKED CHANNEL	ALARM LINKED CRITERIA
POWER FAIL (CH5) ☐ ■	POWER FAIL DETECT NO	PFin-PK AC POWER FAIL	7,200 ALARM	300 NORMAL	ENABLED	ALERT	DISABLED	N/A
CH1 ■ ☐	DIGITAL INPUT NC	CH1-XR XR DOWN TO LONG	1,800 ALARM	1 NORMAL	ENABLED	ALERT	DISABLED	N/A
CH2 ☐ ■	DIGITAL INPUT NO	CH2-EOe LIGHT OUT	120 ALARM	10 NORMAL	ENABLED	ALERT	DISABLED	N/A
CH3 ☐ ■	DIGITAL INPUT NO	CH3-GTe GATES NOT UP/DOWN	120 ALARM	10 NORMAL	ENABLED	ALERT	DISABLED	N/A
CH4 STORED NOMINAL VOLTAGE	ANALOG INPUT N/A	CH4-Ba/V BATTERY MONITOR BATTERY LOW	600 ALARM	1200 NORMAL	ENABLED	ALERT W/UPDATE	DISABLED	N/A
POWER SOURCE (CH6)	ANALOG INPUT N/A	PS-Ba/V BATTERY MONITOR BATTERY LOW	600 ALARM	1200 NORMAL	ENABLED	ALERT W/UPDATE	DISABLED	N/A

EVENT LOGGING ENABLED OPTIONS

ANALOG VALUE SENT

DIGITAL EVENTS

PFin-PK
CH1-XR
CH2-EOe
CH3-GTe

ANALOG CHANNEL	USEFUL RANGE VOLTS LOW	USEFUL RANGE VOLTS HIGH	DISPLAYED RANGE VOLTS LOW	DISPLAYED RANGE VOLTS HIGH	RELATIVE ALARM POINT LOW	RELATIVE ALARM POINT HIGH	ABSOLUTE ALARM POINT LOW	ABSOLUTE ALARM POINT HIGH	AUTOMATIC UPDATE INTERVAL	STORED NOMINAL VOLTAGE	SAMPLED NOMINAL VOLTAGE
CH4	0.0	30.00	0.0	30.00	81%	120%	10.0	29.0	14 DAYS	12.69	
POWER SOURCE	0.0	30.00	0.0	30.00	81%	120%	10.0	29.0	14 DAYS	12.69	

RELAY OUTPUT	NAME	ACTIVE	NORMAL	PULSE DURATION		
	RLY-OUT	SET-UP-OPEN	CLR-DN-CLOSE		15 SECONDS	StdCfg Ver: 2.3.3 REV'D 9-20-02

MAINTENANCE OPERATIONS

TO START OR ABORT ANY PROCEDURE
1. PRESS THE 'CANCEL' BUTTON FIRST

WHEN RESPONDING TO A CALL, PUT THE CRTU IN THE 'SILENCE ALARMS' MODE
1. PRESS 'SELECT' AND THEN '+ ARROW' BUTTON UNTIL
DISPLAY: ACTION?
SILENCE ALARMS
2. PRESS THE 'SELECT' BUTTON TWICE
3. CORRECT PROBLEM AND SIMULATE NORMAL TRAIN MOVEMENT THROUGH THE LOCATION
4. EXAMINE EACH CHANNEL ON THE CRTU
5. PRESS THE '+/- ARROW' BUTTON
VERIFY ALL CHANNELS INDICATE A NORMAL STATE
NORMAL STATES ARE ON THE CHANNEL SETUP CHART

CLEAR TIMERS, LATCHES AND SEND ALL NORMAL
1. DO STEPS #1 - #5 ABOVE, AND PRESS 'CANCEL'.
2. PRESS 'SELECT' AND THEN '- ARROW' BUTTON UNTIL
DISPLAY: ACTION?
SERVICE MODE
3. PRESS 'SELECT' AGAIN TO RESET TIMERS, AND IF
DISPLAY: SERVICE MODE
ALL NORMAL
4. PRESS 'SELECT' AGAIN TO CLEAR LATCHES, AND SEND ALL NORMAL. SKIP STEPS #5-#6.
5. HOWEVER, IF ALARMS ARE NOT CLEARED,
DISPLAY: SERVICE MODE
ALARMS PENDING/PRESENT
6. PRESS 'CANCEL', CORRECT PROBLEM AND REPEAT STEPS #2 THRU #5 UNTIL ALL NORMAL SENT.

TO CANCEL THE 'SILENCE ALARMS' MODE
1. PRESS 'SELECT' AND THEN '+ ARROW' BUTTON UNTIL
DISPLAY: ACTION?
CANCEL SILENCE
2. PRESS THE 'SELECT' BUTTON AGAIN

EXAMINE & SET BATTERY VOLTAGE NOMINAL VALUE
1. PRESS THE '+ ARROW' OR '- ARROW' BUTTON UNTIL THE DESIRED CHANNEL IS DISPLAYED.
DISPLAY: PS-Ba:
13.83V NORMAL
2. VERIFY THE DISPLAYED READING WITH A DIGITAL VOLTMETER
3. PRESS THE 'SELECT' BUTTON, AND THE CRTU DISPLAY WILL SWITCH BETWEEN CURRENT/SAVED NOMINAL VOLTAGE VALUES.
DISPLAY: NOMINAL ON #6? (CURRENT)
13.83
DISPLAY: SAVED NOMINAL 6 (STORED)
12.69
4. PRESS THE 'SELECT' BUTTON AND THE CURRENT OR 'NOMINAL ON' VALUE WILL BE SAMPLED AND STORED AS THE 'SAVED NOMINAL' VALUE
5. VERIFY THE 'NOMINAL ON' AND 'SAVED NOMINAL' VALUES ARE EQUIVALENT, REPEAT STEPS #1 THRU #3 & PRESS THE 'CANCEL' BUTTON.

NEW SHEET

Designed: 3/08/10
INSTALL FLASHERS AND GATES WITH CWT AT M.P. 51.66 TR-93A
Rec'd: 15: WO#: 04196 ALT / IRG / JTB

MODIFICATION LEVEL	
Q.A. LAST LEVEL CHK'D.	DJ
LAST LEVEL MOD. THIS TYP.	DJ
LAST LEVEL BY DESIGNER.	DS
CHANGED FROM TYP.? Y/N	Y

UNION PACIFIC QUALITY PRODUCTIVITY SAFETY
SIGNAL DESIGN

Date: 03/08/10
Des: IRG
Chk: RLT
AFE: 04196

UNION PACIFIC RAILROAD

MOMENCE, ILLINOIS
TR-93A
VILLA GROVE SUBDIVISION
Office of Sr AVP Engineering - Signal/TCO Omaha, Nebraska

Sh.: 2A
DOT 167538H
MP: 51.66
ID: 03005166.2AX

(REV.06.01.04) (CRTUCFG32-2BAT.3)

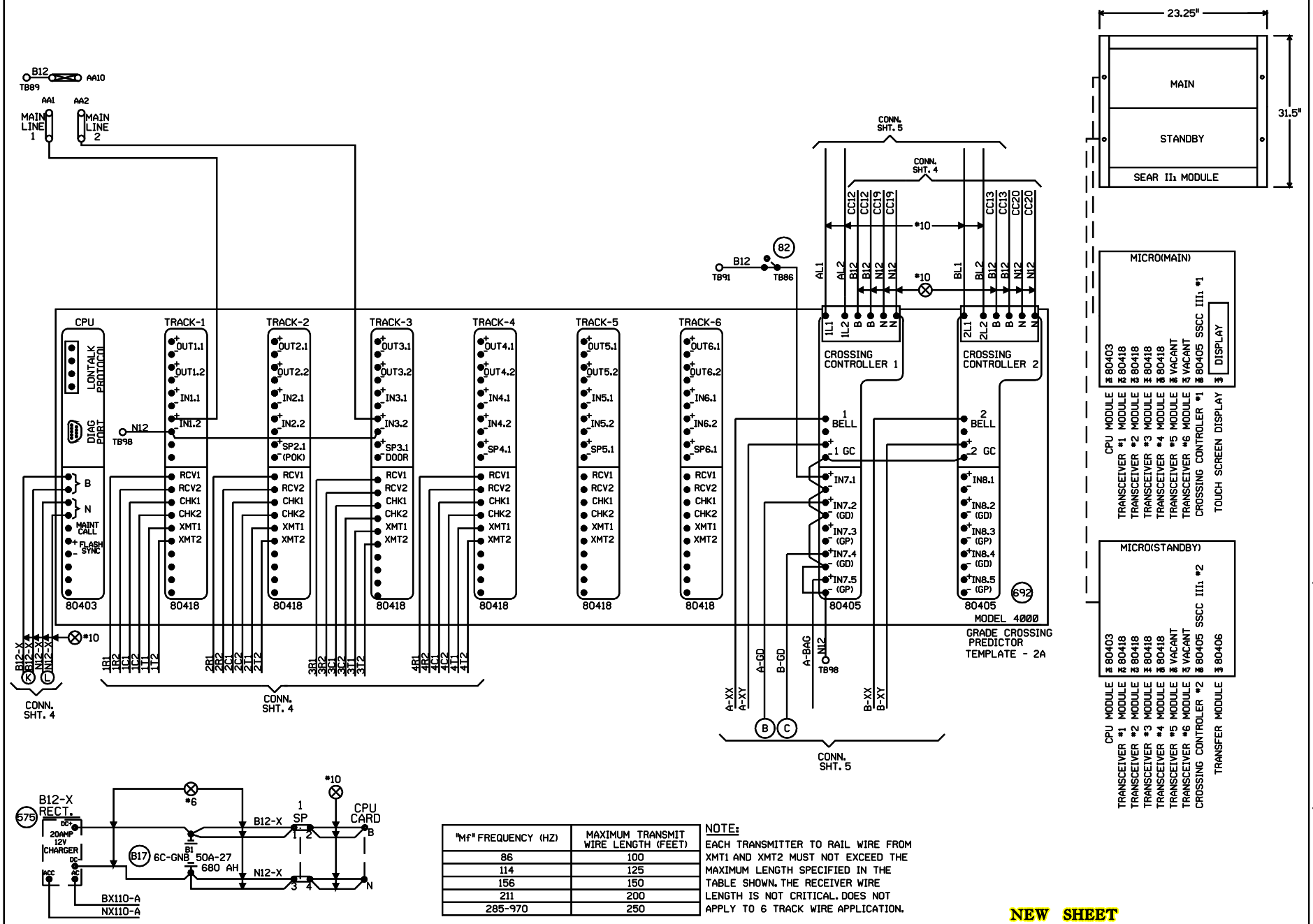

"Mf" FREQUENCY (HZ)	MAXIMUM TRANSMIT WIRE LENGTH (FEET)
86	100
114	125
156	150
211	200
285-970	250

NOTE:
EACH TRANSMITTER TO RAIL WIRE FROM XMT1 AND XMT2 MUST NOT EXCEED THE MAXIMUM LENGTH SPECIFIED IN THE TABLE SHOWN. THE RECEIVER WIRE LENGTH IS NOT CRITICAL. DOES NOT APPLY TO 6 TRACK WIRE APPLICATION.

NEW SHEET

Designed: 3/08/10
INSTALL FLASHERS AND GATES WITH CWT AT M.P. 51.66 TR-93A
Rec#: WO#: 04196
IS: /RLT /IRG/JTB

MODIFICATION LEVEL	
Q. A. LAST LEVEL CHECKED	DS
LAST LEVEL MOD THIS TYPICAL	DS
LAST LEVEL BY DESIGNER	DS
CHANGED FROM TYPICAL?	Y

REV 09.02.09 4K 4TKB4GF.3

UNION PACIFIC
QUALITY PRODUCTIVITY SAFETY
SIGNAL DESIGN

Date: 03/08/10
Des: IRG
Chk: RLT
AFE: 04196

UNION PACIFIC RAILROAD
MOMENCE, ILLINOIS
TR-93A
VILLA GROVE SUBDIVISION
Office of Sr AVP Engineering - Signal/TCO Omaha, Nebraska

Sh.: 3
DOT 167538H
MP: 51.66
ID: 03005166.3X