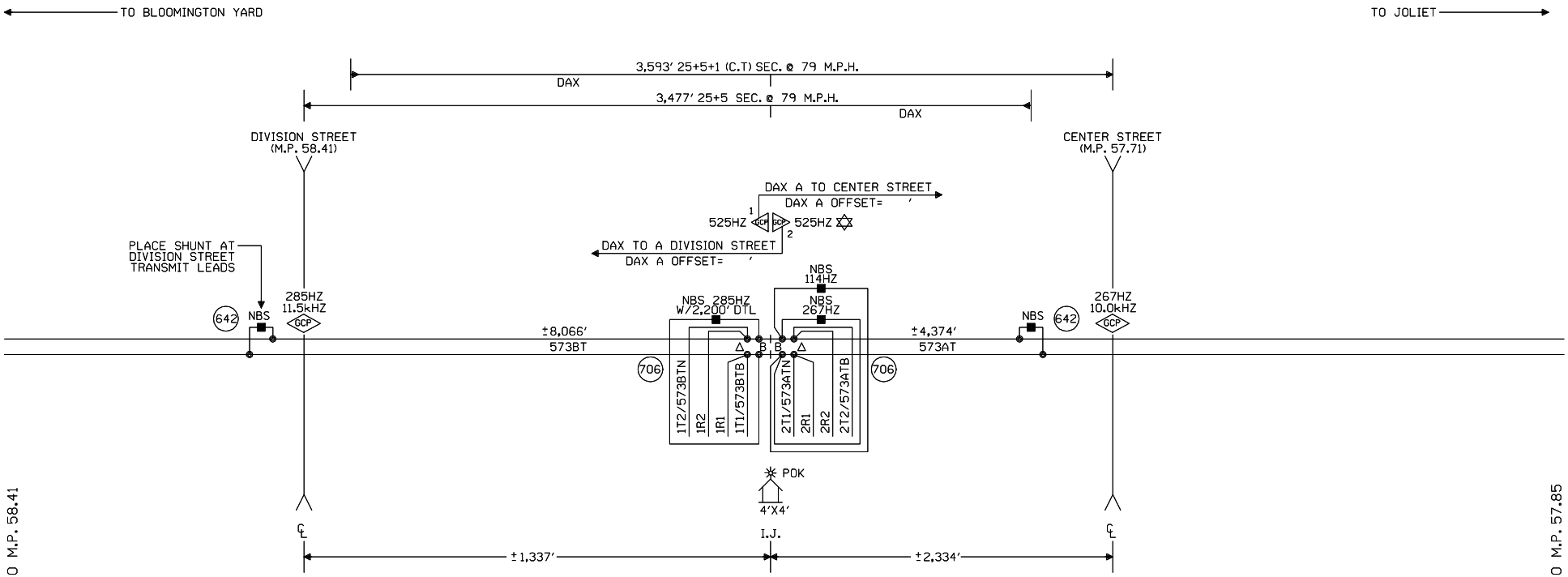

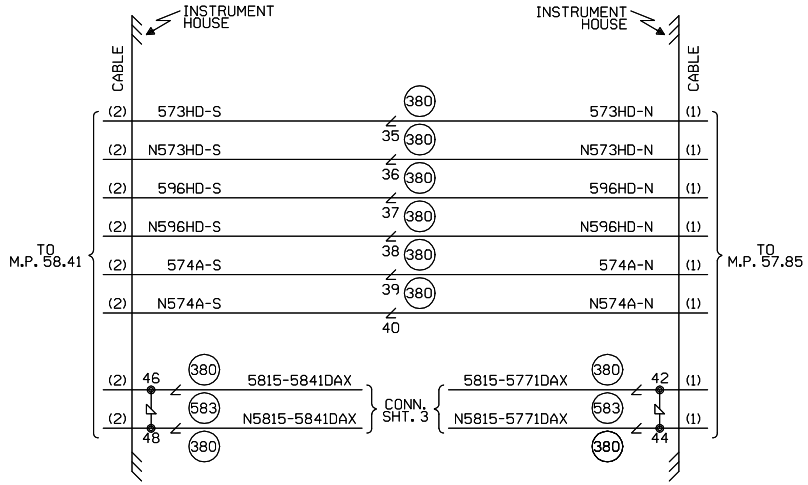

NOTES:

⊗ = TWISTED WIRES
ALL TRACK WIRES 2C. #6
INSULATED 1 TWIST PER FT.

TRANSMITTER AND RECEIVER LEADS
TO BE SEPARATED BY AT LEAST 12" IN TRENCH,
LENGTHS SHOULD NOT EXCEED MANUFACTURER'S
RECOMMENDATION.

ALL BUNGALOW WIRING TO BE #16 AWG FLEX
UNLESS OTHERWISE SPECIFIED EXCEPT ALL GROUND
WIRE TO BE #6 AWG FLEX OR LARGER.

REFER TO UP STANDARD DWG. FOR BUNGALOW
GROUNDING.

PORTABLE GENERATOR EXTENSION CORD
FOR 240V TO 240V IS PROVIDED AS WELL
AS A 120V TO 240V ADAPTER.

△ = ENSURE TRACK POLARITY IS
TRANSPOSED ACROSS ALL
INSULATED JOINTS.

✡ = GCP TO OPERATE IN SEMI-BI
DIRECTIONAL MODE. USE TAB 627
COUPLER.

CONSTRUCTION NOTES:

1. INSTALL IN CONJUNCTION WITH DIVISION STREET AT M.P. 58.41 (WO 05377).
2. INSTALL ZUKINUT TRACK BATTERY (TAB 970) FOR 573AT AND 573BT AT THIS LOCATION.
3. INSTALL (2)-12C#14 UNDERGROUND CABLE SPLICE KITS TO SPLICE EXISTING CABLES TO NEW REMOTE HOUSE.

W(S) ←—○—→ E(N)

CABLE TABULATION

CABLE #1 12C#14 U.G.B.T. HOUSE TO MP. 57.85
CABLE #2 12C#14 U.G.B.T. HOUSE TO MP. 58.41
← EXISTING

NEW SHEET

Designed: 07/12/10
INSTALL FLS/GATES & CONSTANT WARNING AT DIVISION STREET M.P. 58.41
Rec#: WO#: 05377
IS: /BDF
/CTC/JTB

MODIFICATION LEVEL	
Q. A. LAST LEVEL CHECKED	DT
LAST LEVEL MOD THIS TYPICAL	DT
LAST LEVEL BY DESIGNER	DT
CHANGED FROM TYPICAL?	Y

REV 05.24.10 4K REMOTE.1

UNION PACIFIC
QUALITY PRODUCTIVITY SAFETY
SIGNAL DESIGN

Date:	07/12/10
Des:	CTC
Chk:	BDF
AFE:	05377

UNION PACIFIC RAILROAD
BRAIDWOOD, ILLINOIS
REMOTE LOCATION
JOLIET SUBDIVISION
Office of Sr AVP Engineering - Signal/TCO Omaha, Nebraska

Sh.:	1
DOT	000000R
MP:	58.15
ID:	CSL5815.1X

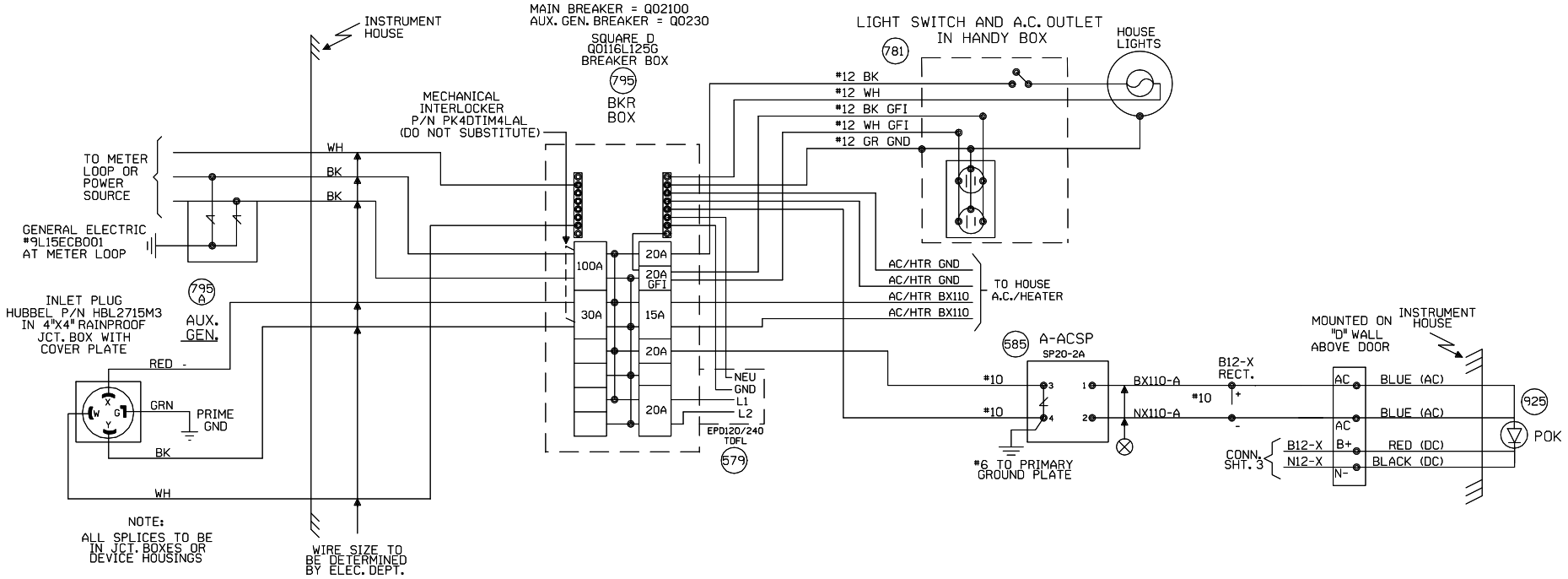

NEW SHEET

					Designed: 07/12/10 INSTALL FLS/GATES & CONSTANT WARNING AT DIVISION STREET M.P. 58.41 Rec#: WO#: 05377 IS: /BDF / /CTC/JTB	MODIFICATION LEVEL Q. A. LAST LEVEL CHECKED DT LAST LEVEL MOD THIS TYPICAL DT LAST LEVEL BY DESIGNER DT CHANGED FROM TYPICAL? Y REV 05.24.10 4K SEARAC.2	UNION PACIFIC QUALITY PRODUCTIVITY SAFETY SIGNAL DESIGN	Date: 07/12/10 Des: CTC Chk: BDF AFE: 05377	UNION PACIFIC RAILROAD BRAIDWOOD, ILLINOIS REMOTE LOCATION JOLIET SUBDIVISION Office of Sr AVP Engineering - Signal/TCO Omaha, Nebraska	Sh.: 2 DOT 000000R MP: 58.15 ID: CSL5815.2X

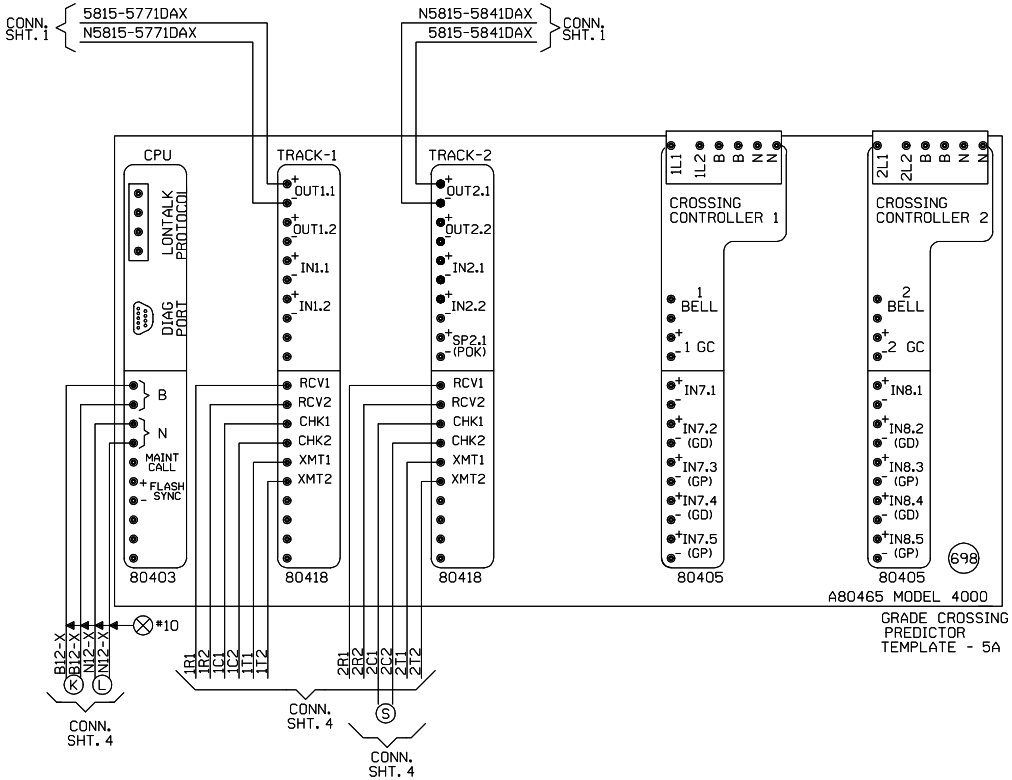

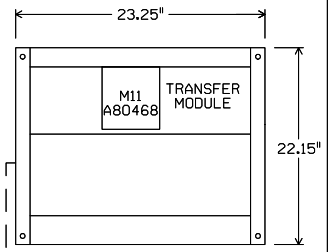

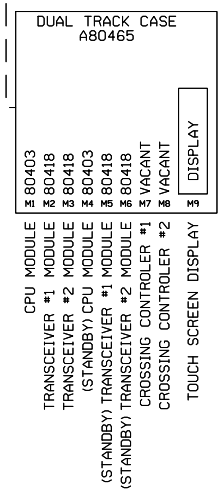

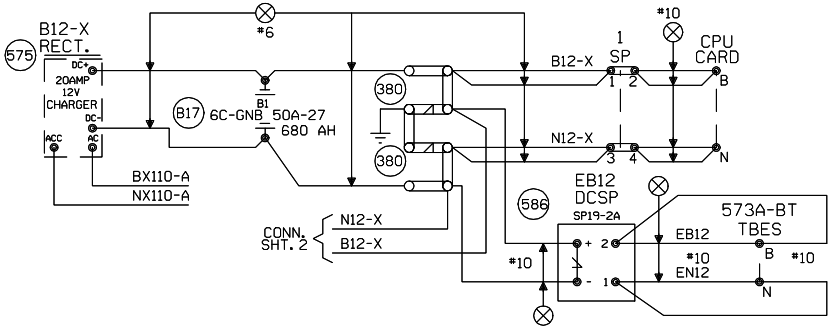

"Mf" FREQUENCY (HZ)	MAXIMUM TRANSMIT WIRE LENGTH (FEET)
86	100
114	125
156	150
211	200
285-970	250

NOTE:
EACH TRANSMITTER TO RAIL WIRE FROM XMT1 AND XMT2 MUST NOT EXCEED THE MAXIMUM LENGTH SPECIFIED IN THE TABLE SHOWN. THE RECEIVER WIRE LENGTH IS NOT CRITICAL. DOES NOT APPLY TO 6 TRACK WIRE APPLICATION.

NEW SHEET

Designed: 07/12/10
INSTALL FLS/GATES & CONSTANT WARNING AT DIVISION STREET M.P. 58.41.
Rec#: 154 WO#: 05377 /BDF /CTC/JTB

MODIFICATION LEVEL	
Q.A. LAST LEVEL CHECKED	DT
LAST LEVEL MOD THIS TYPICAL	DT
LAST LEVEL BY DESIGNER	DT
CHANGED FROM TYPICAL?	Y

MY 05.24.10 4K 2TK6F.3

UNION PACIFIC
QUALITY PRODUCTIVITY SAFETY
SIGNAL DESIGN

Date: 07/12/10
Des: CTC
Chk: BDF
AFE: 05377

UNION PACIFIC RAILROAD
BRAIDWOOD, ILLINOIS
REMOTE LOCATION
JOLIET SUBDIVISION
Office of Sr AVP Engineering - Signal/TCO Omaha, Nebraska

Sh.: 3
DOT 000000R
MP: 58.15
ID: CSL5815.3X

Minimum Program Steps Report

Location and SIN

DOT Number: 000000R
Milepost Number: 58.15
Site Name: BRAIDWOOD, IL

SIN: 762010010016 *

* Parameter is part of office check number calculation.

MCF and Template Selection

MCF Name: GCP-T6X-02-1.mcf
MCF Revision: 021
MCFCRC: 6076E435

Template = 5A:3 Remote pairs *

* Parameter is part of office check number calculation.

Minimum Program Steps

TEMPLATE: track 1-Remote Dax
Track 1 : GCP Frequency = 525 Hz
Track 1 : Approach Distance = 1403 ft ← FIELD TO VERIFY DISTANCE
Track 1 : Dax A Warning Time = 26 sec
Track 1 : Dax A Offset Distance = 2270 ft
Track 1 : GCP Transmit Level = Medium (Set in Field)

TEMPLATE: track 2-Remote Dax
Track 2 : GCP Frequency = 525 Hz
Track 2 : Approach Distance = 2207 ft
Track 2 : Dax A Warning Time = 25 sec
Track 2 : Dax A Offset Distance = 1270 ft
Track 2 : GCP Transmit Level = Medium (Set in Field)
Track 2 : Uni/Bi/Sim-Bidirnl = Sim. Bidirnl *

TEMPLATE: track Anding
AND 1 XR Used = No *

TEMPLATE: OP assignment 1
OUT 1.1 = T1 Dax A *
OUT 2.1 = T2 Dax A *

* Parameter is part of office check number calculation.

Check Numbers

Office Check No. (DT 4.6.0): 4F73536C
Office Check Number: 4F73536C
Config. Check Number: 28D8195C
(Based on MCF Revision 021)

Parameters not part of office check number calculation:

Track 1 : GCP Frequency = 525 Hz
Track 1 : Approach Distance = 1403 ft
Track 1 : Dax A Warning Time = 26 sec
Track 1 : Dax A Offset Distance = 2270 ft
Track 1 : GCP Transmit Level = Medium (Set in Field)
Track 2 : GCP Frequency = 525 Hz
Track 2 : Approach Distance = 2207 ft
Track 2 : Dax A Warning Time = 25 sec
Track 2 : Dax A Offset Distance = 1270 ft
Track 2 : GCP Transmit Level = Medium (Set in Field)

Comments

<none>

Configuration Package File

Filename: CSL5815_000000R.pac
Path: H:\01-Xing\up100187\GCP Programs\M.P. 58.15\
Date/Time: 11/02/2010 15:43:40

NEW SHEET

Designed: 07/12/10
INSTALL FLS/GATES & CONSTANT WARNING AT DIVISION STREET M.P. 58.41
Rec*: WO*: 05377
IS: /BDF
/ /CTC/JTB

NOTE: Actual OFFSET and ISLAND distances must be verified by field personnel.

UNION PACIFIC
QUALITY PRODUCTIVITY SAFETY
SIGNAL DESIGN

Date:	07/12/10
Des:	CTC
Chk:	BDF
AFE:	05377

UNION PACIFIC RAILROAD
BRAIDWOOD, ILLINOIS
REMOTE LOCATION
JOLIET SUBDIVISION
Office of Sr AVP Engineering - Signal/TCO Omaha, Nebraska

Sh.:	3A
DOT	000000R
MP:	58.15
ID:	CSL5815.3AX

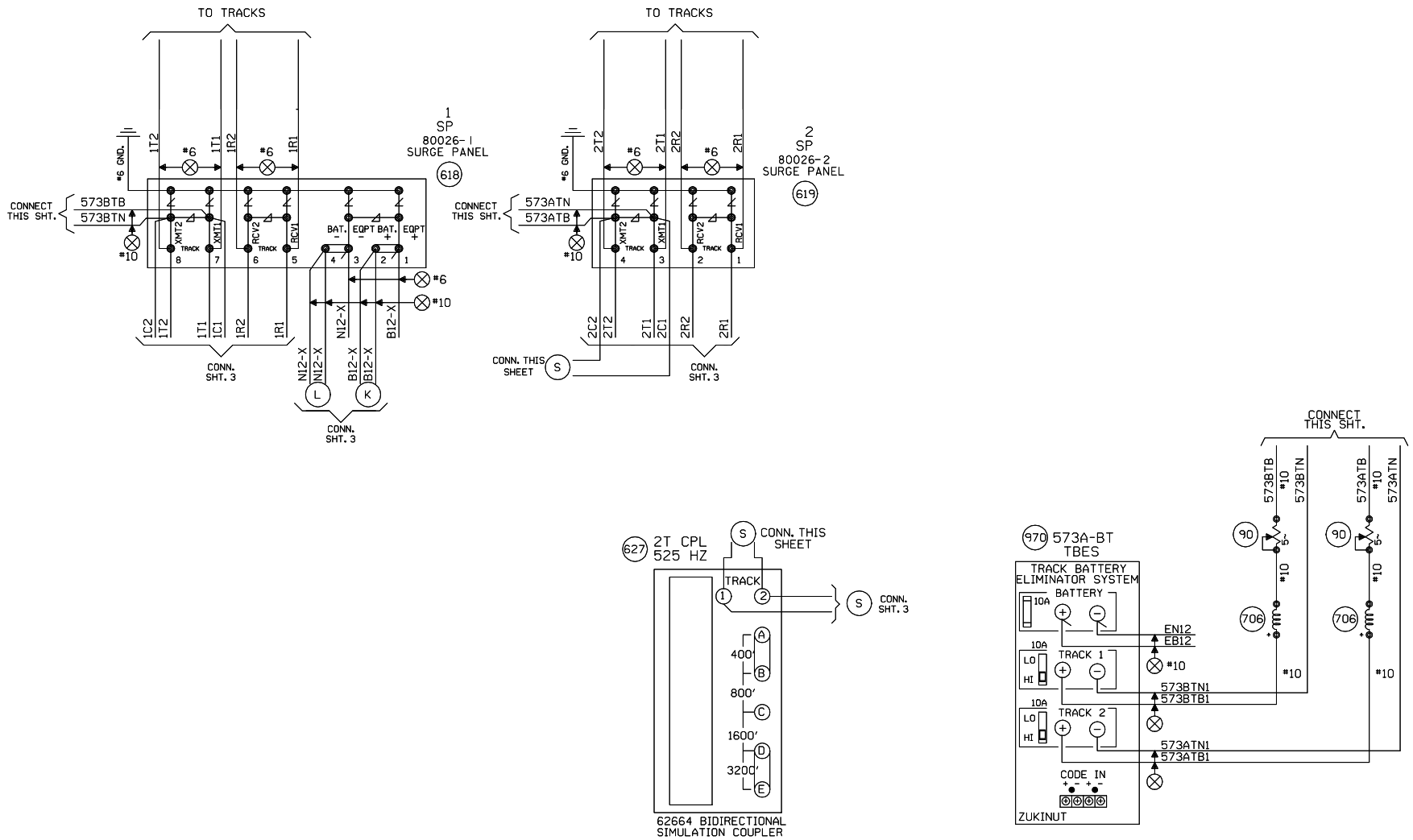

NEW SHEET

					Designed: 07/12/10 INSTALL FLS/GATES & CONSTANT WARNING AT DIVISION STREET M.P. 58.41 Rec#: WO#: 05377 IS: /BDF / /CTC/JTB	MODIFICATION LEVEL		UNION PACIFIC QUALITY PRODUCTIVITY SAFETY SIGNAL DESIGN	Date: 07/12/10 Des: CTC Chk: BDF AFE: 05377	UNION PACIFIC RAILROAD BRAIDWOOD, ILLINOIS REMOTE LOCATION JOLIET SUBDIVISION Office of Sr AVP Engineering - Signal/TCO Omaha, Nebraska	Sh.: 4 DOT 000000R MP: 58.15 ID: CSL5815.4X
						Q. A. LAST LEVEL CHECKED	DT				
						LAST LEVEL MOD THIS TYPICAL	DT				
						LAST LEVEL BY DESIGNER	DT				
						CHANGED FROM TYPICAL? REV 05.24.10 4K REMOTE.4	Y				

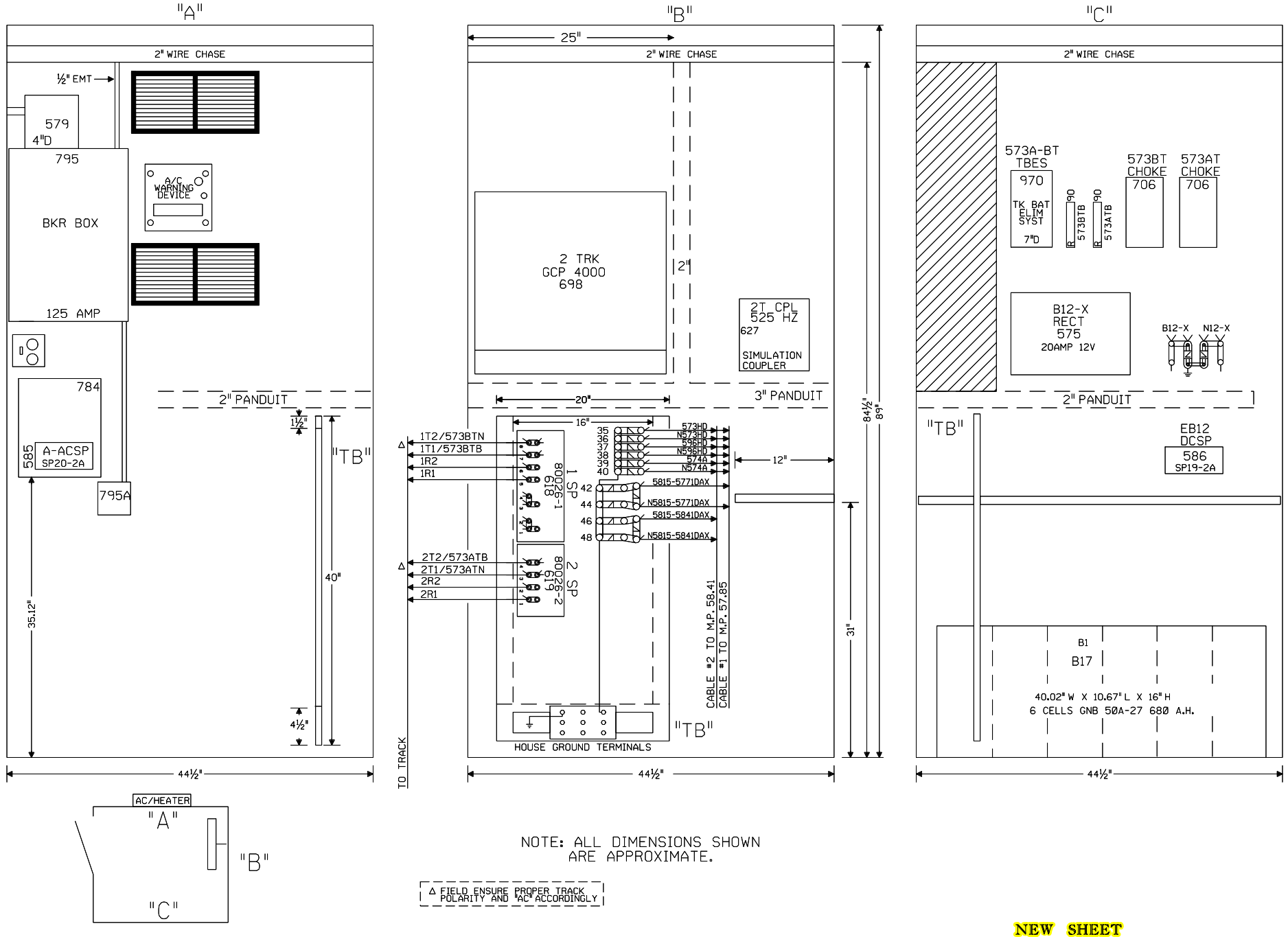
"A"
2" WIRE CHASE
½" EMT
579
4"D
795
BKR BOX
125 AMP
A/C WARNING DEVICE
784
585
A-ACSP
SP20-2A
795A
2" PANDUIT
1½"
"TB"
40"
4½"
35.12"
44½"
"B"
25"
2" WIRE CHASE
2 TRK
GCP 4000
698
2"
2T CPL
525 HZ
627
SIMULATION COUPLER
3" PANDUIT
20"
16"
1T2/573BTN
1T1/573BTB
1R2
1R1
1 SP
80026-1
618
2T2/573ATB
2T1/573ATN
2R2
2R1
2 SP
80026-2
619
35
36
37
38
39
40
573HD
N573HD
596HD
N596HD
574A
N574A
12"
42
44
46
48
5815-5771DAX
N5815-5771DAX
5815-5841DAX
N5815-5841DAX
CABLE #2 TO M.P. 58.41
CABLE #1 TO M.P. 57.85
84½"
89"
31"
"TB"
HOUSE GROUND TERMINALS
TO TRACK
44½"
"C"
2" WIRE CHASE
573A-BT
TBES
970
TK BAT ELIM SYST
7"D
90
573BTB
90
573ATB
573BT
CHOKE
706
573AT
CHOKE
706
B12-X
RECT
575
20AMP 12V
B12-X
N12-X
2" PANDUIT
"TB"
EB12
DCSP
586
SP19-2A
B1
B17
40.02" W X 10.67" L X 16" H
6 CELLS GNB 50A-27 680 A.H.
44½"
AC/HEATER
"A"
"B"
"C"
NOTE: ALL DIMENSIONS SHOWN ARE APPROXIMATE.
Δ FIELD ENSURE PROPER TRACK POLARITY AND "AC" ACCORDINGLY
NEW SHEET
Designed: 07/12/10
INSTALL FLS/GATES & CONSTANT WARNING AT DIVISION STREET M.P. 58.41
Rec#: 15:
WO#: 05377
/BDF
/CTC/JTB
MODIFICATION LEVEL
Q. A. LAST LEVEL CHECKED DT
LAST LEVEL MOD THIS TYPICAL DT
LAST LEVEL BY DESIGNER DT
CHANGED FROM TYPICAL? Y
REV 05.24.10 4K REMOTE.5
UNION PACIFIC
QUALITY PRODUCTIVITY SAFETY
SIGNAL DESIGN
Date: 07/12/10
Des: CTC
Chk: BDF
AFE: 05377
UNION PACIFIC RAILROAD
BRAIDWOOD, ILLINOIS
REMOTE LOCATION
JOLIET SUBDIVISION
Office of Sr AVP Engineering - Signal/TCO Omaha, Nebraska
Sh.: 5
DOT 000000R
MP: 58.15
ID: CSL5815.5X

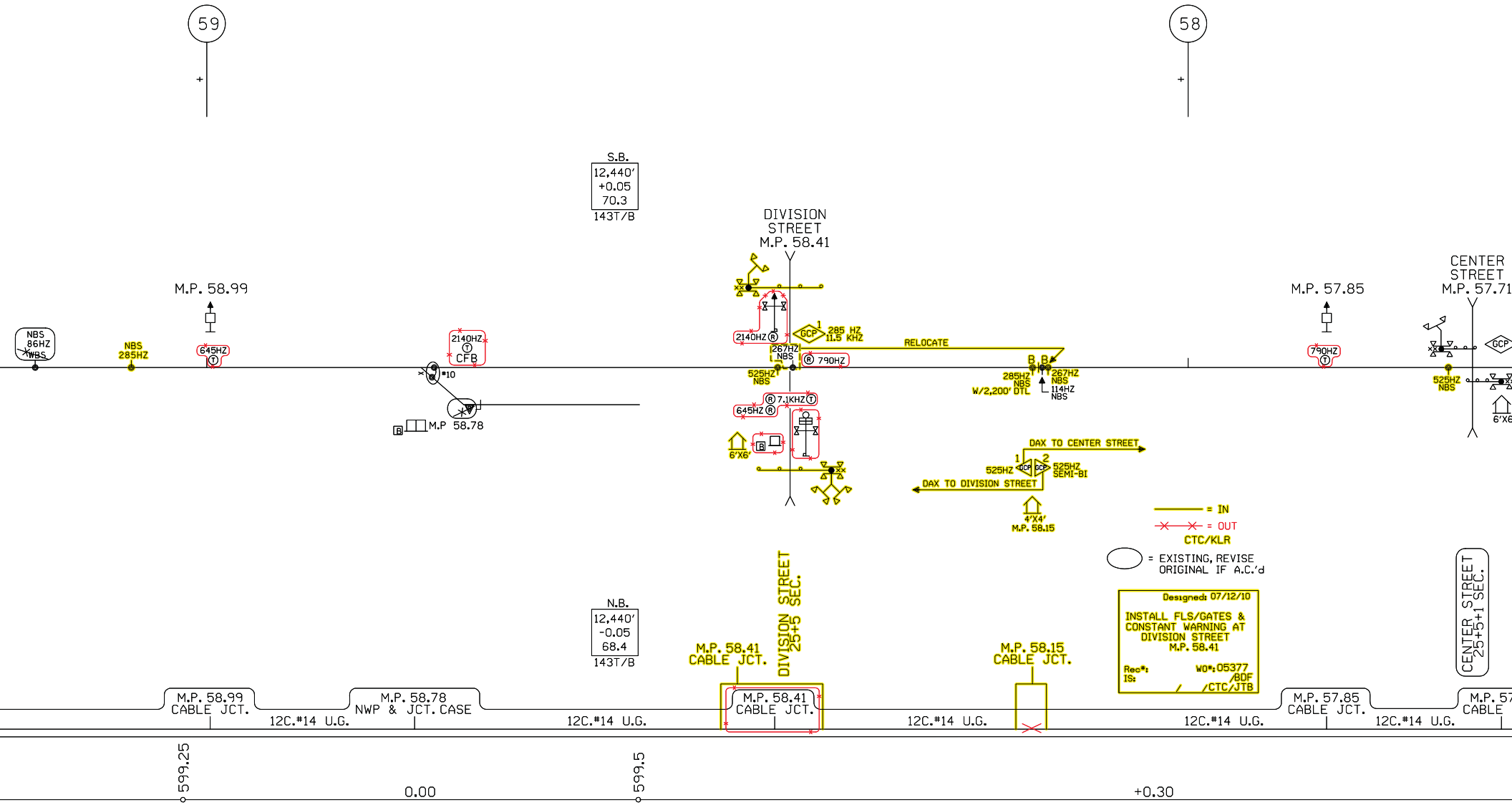
59
58
S.B.
12,440'
+0.05
70.3
143T/B
DIVISION
STREET
M.P. 58.41
M.P. 58.99
M.P. 57.85
CENTER
STREET
M.P. 57.71
NBS
86HZ
WBS
NBS
285HZ
645HZ
2140HZ
CFB
#10
M.P 58.78
2140HZ
GCP
285 HZ
11.5 KHZ
267HZ
NBS
790HZ
525HZ
NBS
7.1KHZ
645HZ
6'X6'
RELOCATE
285HZ
NBS
W/2,200' DTL
267HZ
NBS
114HZ
NBS
790HZ
525HZ
NBS
DAX TO CENTER STREET
525HZ
525HZ
SEMI-BI
DAX TO DIVISION STREET
4'X4'
M.P. 58.15
= IN
= OUT
CTC/KLR
= EXISTING, REVISE
ORIGINAL IF A.C.'d
Designed: 07/12/10
INSTALL FLS/GATES &
CONSTANT WARNING AT
DIVISION STREET
M.P. 58.41
Rec#:
IS:
WO#:05377
/BDF
/CTC/JTB
N.B.
12,440'
-0.05
68.4
143T/B
M.P. 58.41
CABLE JCT.
DIVISION STREET
25+5 SEC.
M.P. 58.15
CABLE JCT.
CENTER STREET
25+5+1 SEC.
M.P. 58.99
CABLE JCT.
M.P. 58.78
NWP & JCT. CASE
M.P. 58.41
CABLE JCT.
M.P. 57.85
CABLE JCT.
12C.#14 U.G.
599.25
0.00
599.5
+0.30