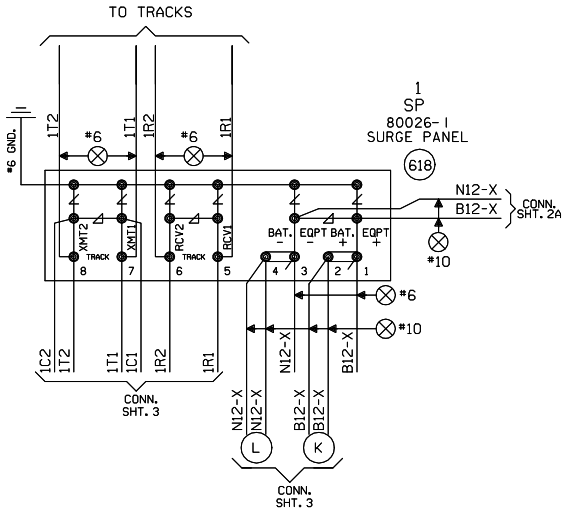

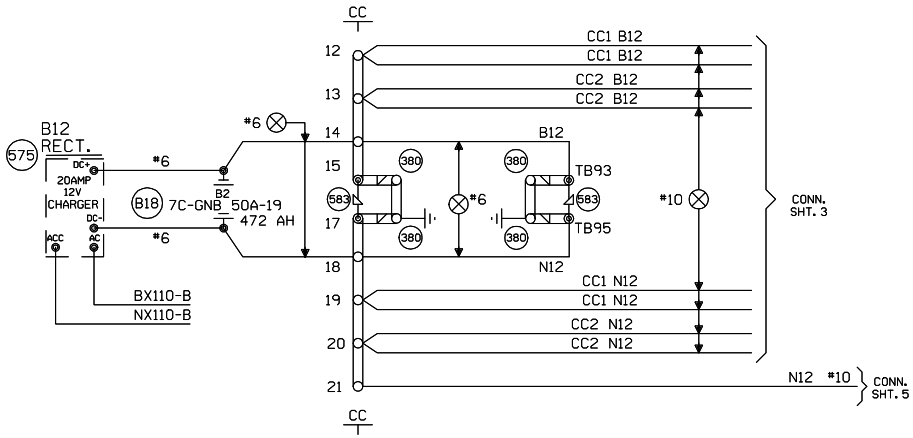

NEW SHEET

					Designed: 07/12/10 INSTALL FLS/GATES & CONSTANT WARNING AT DIVISION STREET M.P. 58.41. Rec#: 15: WO#: 05377 /BDF / /CTC/JTB	MODIFICATION LEVEL Q. A. LAST LEVEL CHECKED DT LAST LEVEL MOD THIS TYPICAL DT LAST LEVEL BY DESIGNER DT CHANGED FROM TYPICAL? Y REV 05.24.10 4K 4TKSPGFC.4	UNION PACIFIC QUALITY PRODUCTIVITY SAFETY SIGNAL DESIGN	Date: 07/12/10 Des: CTC Chk: BDF AFE: 05377	**UNION PACIFIC RAILROAD** BRAIDWOOD, ILLINOIS DIVISION STREET JOLIET SUBDIVISION Office of Sr AVP Engineering - Signal/TCO Omaha, Nebraska	Sh.: 4 DOT 290508A MP: 58.41 ID: CSL5841.4X

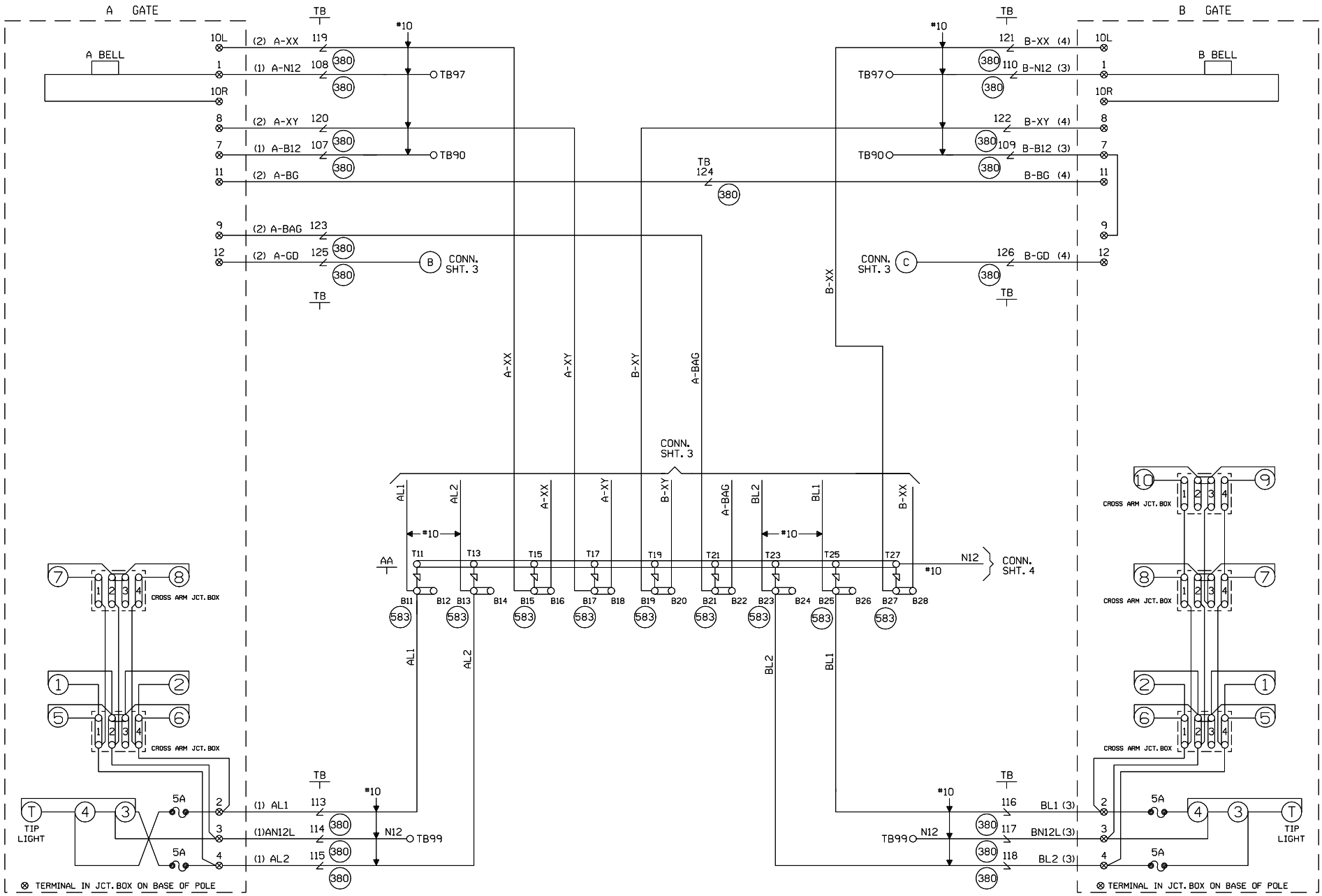

CABLE TABULATION

CABLE NO. 1 5C. NO.6 U.G.B.T. TO GATE A
CABLE NO. 2 7C. NO.14 U.G.B.T. TO GATE A
CABLE NO. 3 5C. NO.6 U.G.B.T. TO GATE B
CABLE NO. 4 7C. NO.14 U.G.B.T. TO GATE B

NEW SHEET

Designed: 07/12/10
INSTALL FLS/GATES & CONSTANT WARNING AT DIVISION STREET M.P. 58.41
Rec#: 154 WO#: 05377 /BDF / /CTC/JTB

MODIFICATION LEVEL	
Q. A. LAST LEVEL CHECKED	DT
LAST LEVEL MOD THIS TYPICAL	DT
LAST LEVEL BY DESIGNER	DT
CHANGED FROM TYPICAL?	Y

REV 05.24.10 4K GFSLTYP.5

UNION PACIFIC
QUALITY PRODUCTIVITY SAFETY
SIGNAL DESIGN

Date:	07/12/10
Des:	CTC
Chk:	BDF
AFE:	05377

UNION PACIFIC RAILROAD

BRAIDWOOD, ILLINOIS
DIVISION STREET
JOLIET SUBDIVISION

Office of Sr AVP Engineering - Signal/TCO Omaha, Nebraska

Sh.:	5
DOT	290508A
MP:	58.41
ID:	CSL5841.5X

WCH 3593-E

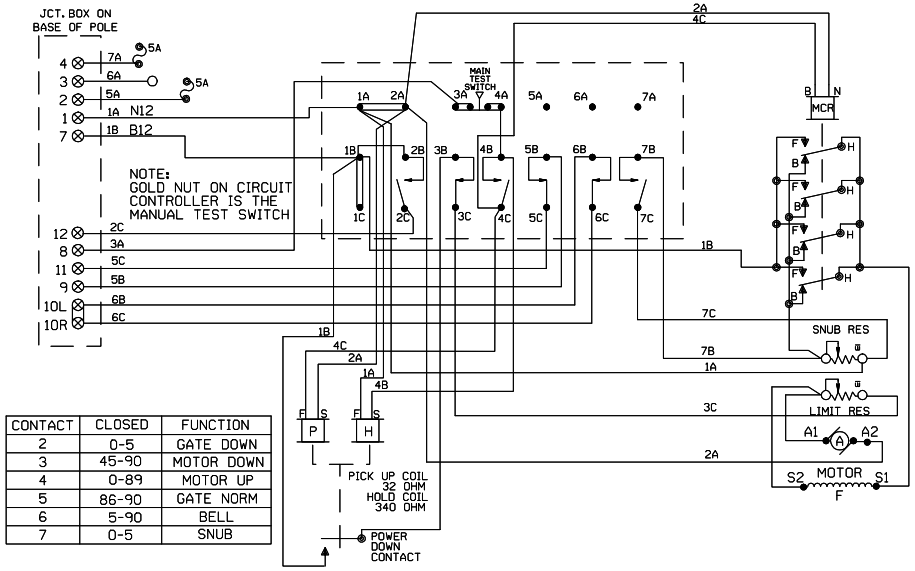

CONTACT	CLOSED	FUNCTION
2	0-5	GATE DOWN
3	45-90	MOTOR DOWN
4	0-89	MOTOR UP
5	86-90	GATE NORM
6	5-90	BELL
7	0-5	SNUB

WCH 3597-E

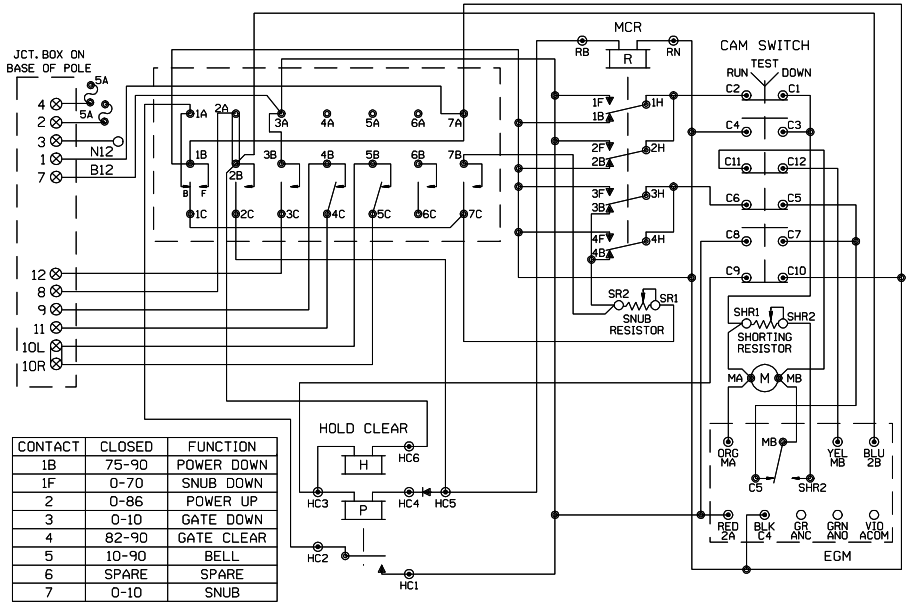

CONTACT	CLOSED	FUNCTION
1B	75-90	POWER DOWN
1F	0-70	SNUB DOWN
2	0-86	POWER UP
3	0-10	GATE DOWN
4	82-90	GATE CLEAR
5	10-90	BELL
6	SPARE	SPARE
7	0-10	SNUB

WCH 3597-RB

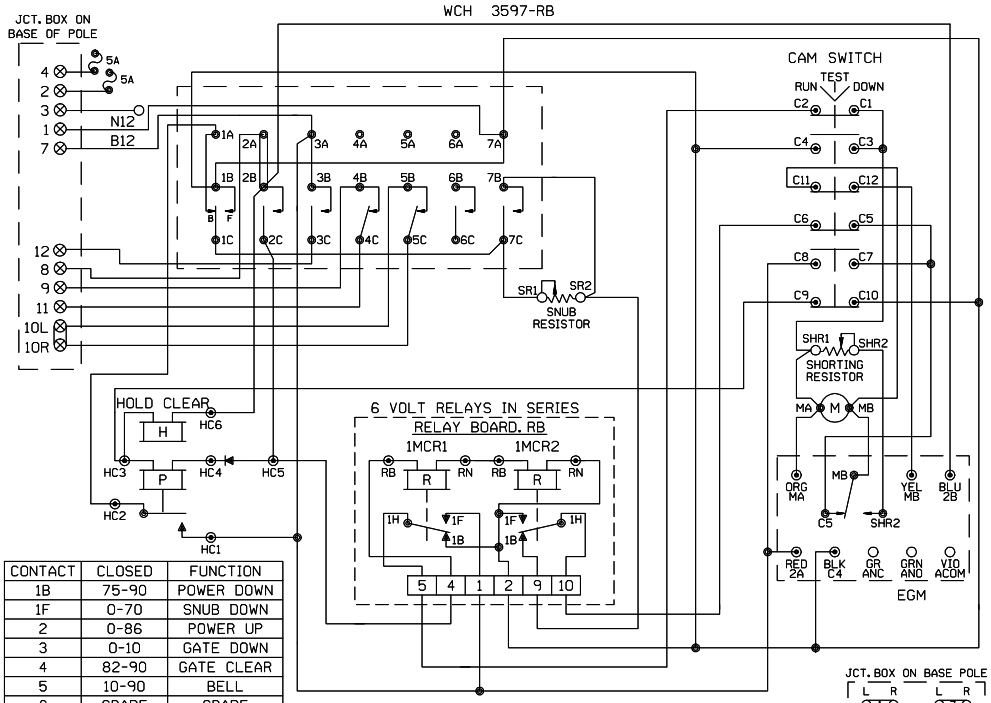

CONTACT	CLOSED	FUNCTION
1B	75-90	POWER DOWN
1F	0-70	SNUB DOWN
2	0-86	POWER UP
3	0-10	GATE DOWN
4	82-90	GATE CLEAR
5	10-90	BELL
6	SPARE	SPARE
7	0-10	SNUB

JCT. BOX ON BASE POLE

L	R	L	R
1	1	7	7
2	2	8	8
3	3	9	9
4	4	10	10
5	5	11	11
6	6	12	12

SHOW TYPE MECH. INSTALLED

ALL MECHANISMS SHOWN IN THE CLEAR POSITION

SAFETRAN S-60

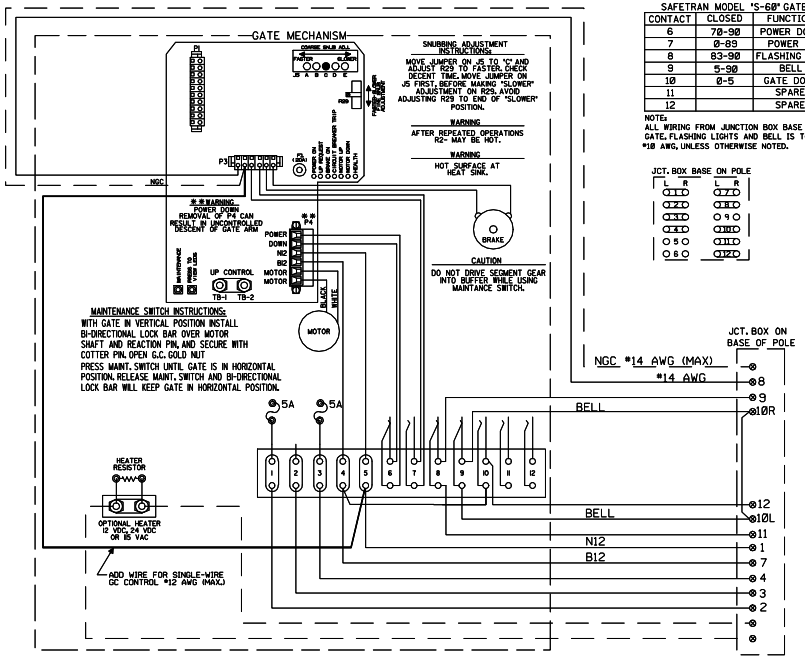

SAFETRAN MODEL 'S-60' GATE

CONTACT	CLOSED	FUNCTION
6	70-90	POWER DOWN
7	0-89	POWER UP
8	83-90	FLASHING LGT.
9	5-90	BELL
10	0-5	GATE DOWN
11		SPARE
12		SPARE

NOTE:
ALL WIRING FROM JUNCTION BOX BASE TO GATE, FLASHING LIGHTS AND BELL IS TO BE #10 AWG, UNLESS OTHERWISE NOTED.

JCT. BOX BASE ON POLE

L	R	L	R
1	1	7	7
2	2	8	8
3	3	9	9
4	4	10	10
5	5	11	11
6	6	12	12

NEW SHEET

Designed: 07/12/10
INSTALL FLS/GATES & CONSTANT WARNING AT DIVISION STREET M.P. 58.41.
Rec#: 15: WO#: 05377 /BDF / /CTC/JTB

MODIFICATION LEVEL		
Q. A. LAST LEVEL CHECKED	DT	
LAST LEVEL MOD THIS TYPICAL	DT	
LAST LEVEL BY DESIGNER	DT	
CHANGED FROM TYPICAL?	N	

REV 05.24.10 4K GWIRING.7

UNION PACIFIC
QUALITY PRODUCTIVITY SAFETY
SIGNAL DESIGN

Date: 07/12/10
Des: CTC
Chk: BDF
AFE: 05377

UNION PACIFIC RAILROAD
BRAIDWOOD, ILLINOIS
DIVISION STREET
JOLIET SUBDIVISION
Office of Sr AVP Engineering - Signal/TCO Omaha, Nebraska

Sh.: 6
DOT 290508A
MP: 58.41
ID: CSL5841.6X

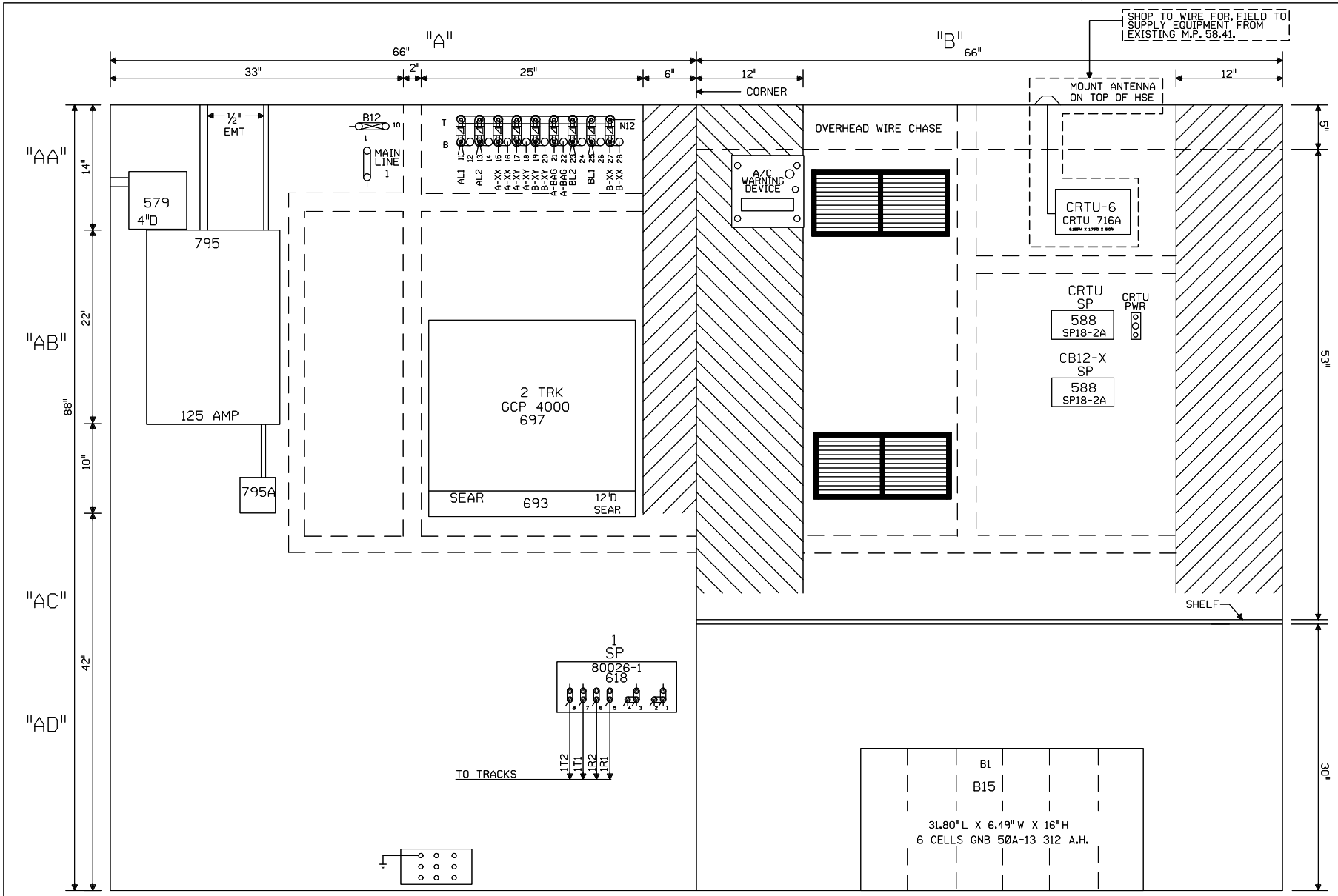

NOTE: ALL DIMENSIONS SHOWN ARE APPROXIMATE.

NEW SHEET

Designed: 07/12/10

INSTALL FLS/GATES & CONSTANT WARNING AT DIVISION STREET M.P. 58.41

Rec#: 15: WO#: 05377 /BDF /CTC/JTB

MODIFICATION LEVEL	
Q. A. LAST LEVEL CHECKED	DT
LAST LEVEL MOD THIS TYPICAL	DT
LAST LEVEL BY DESIGNER	DT
CHANGED FROM TYPICAL?	Y

REV 05.24.10 4K 4TKGFC.8

UNION PACIFIC
QUALITY PRODUCTIVITY SAFETY
SIGNAL DESIGN

Date: 07/12/10
Des: CTC
Chk: BDF
AFE: 05377

UNION PACIFIC RAILROAD

BRAIDWOOD, ILLINOIS
DIVISION STREET
JOLIET SUBDIVISION

Office of Sr AVP Engineering - Signal/TCO Omaha, Nebraska

Sh.: 7
DOT 290508A
MP: 58.41
ID: CSL5841.7X

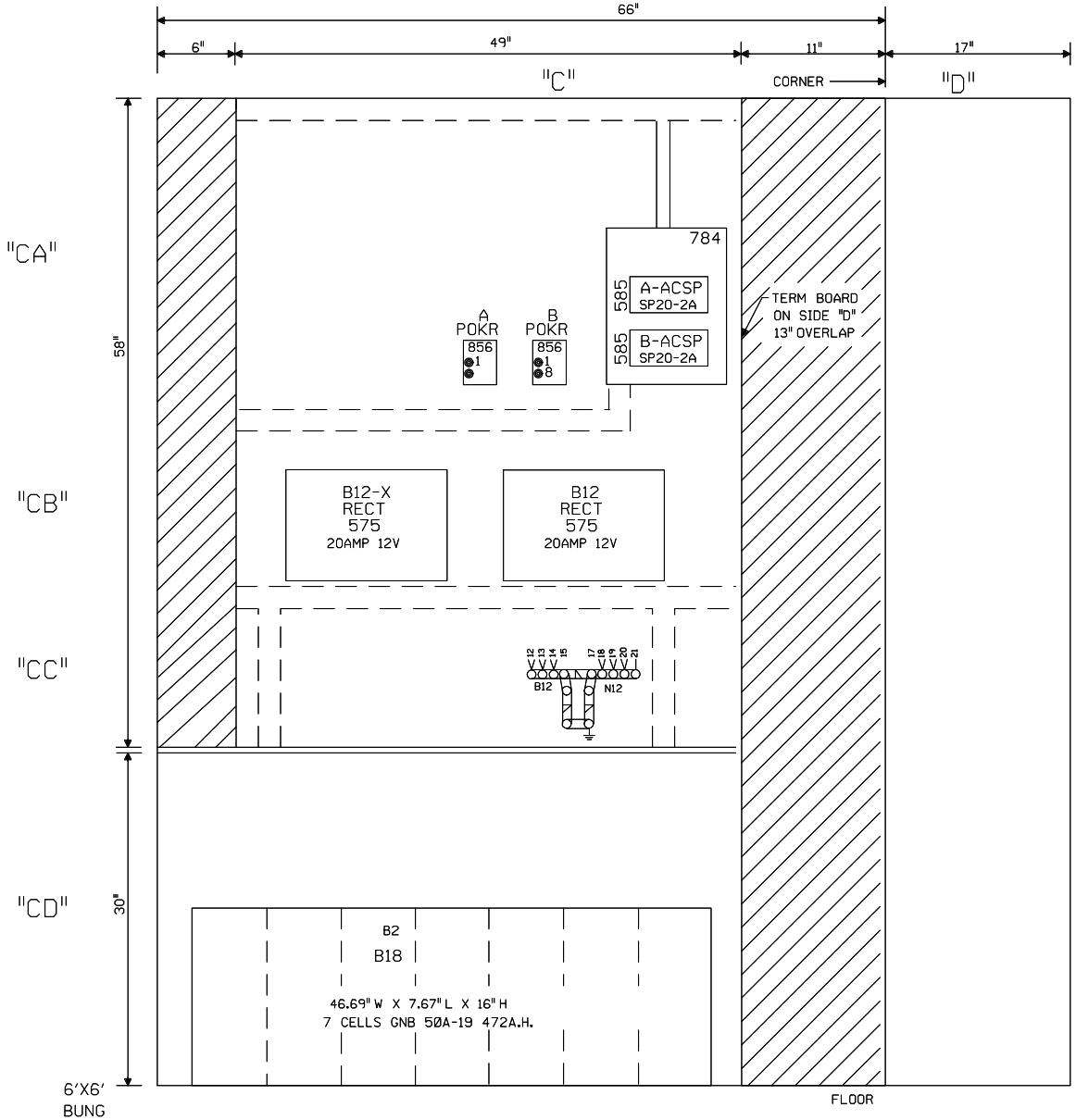

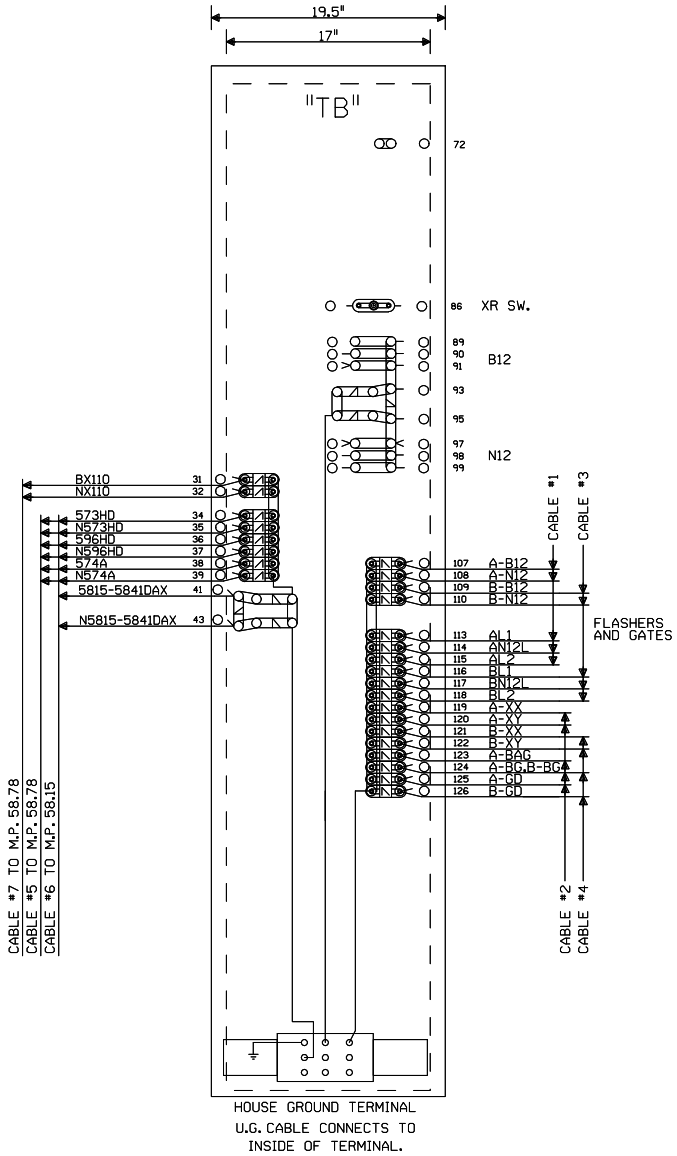

NOTE: ALL DIMENSIONS SHOWN
ARE APPROXIMATE.

NEW SHEET

					Designed: 07/12/10 INSTALL FLS/GATES & CONSTANT WARNING AT DIVISION STREET M.P. 58.41 Rec#: 15: WO#: 05377 /BDF /CTC/JTB	MODIFICATION LEVEL Q.A. LAST LEVEL CHECKED DT LAST LEVEL MOD THIS TYPICAL DT LAST LEVEL BY DESIGNER DT CHANGED FROM TYPICAL? Y REV 05.24.10 4K GFC.9	UNION PACIFIC QUALITY PRODUCTIVITY SAFETY SIGNAL DESIGN	Date: 07/12/10 Des: CTC Chk: BDF AFE: 05377	**UNION PACIFIC RAILROAD** BRAIDWOOD, ILLINOIS DIVISION STREET JOLIET SUBDIVISION Office of Sr AVP Engineering - Signal/TCO Omaha, Nebraska	Sh.: 8 DOT 290508A MP: 58.41 ID: CSL5841.8X