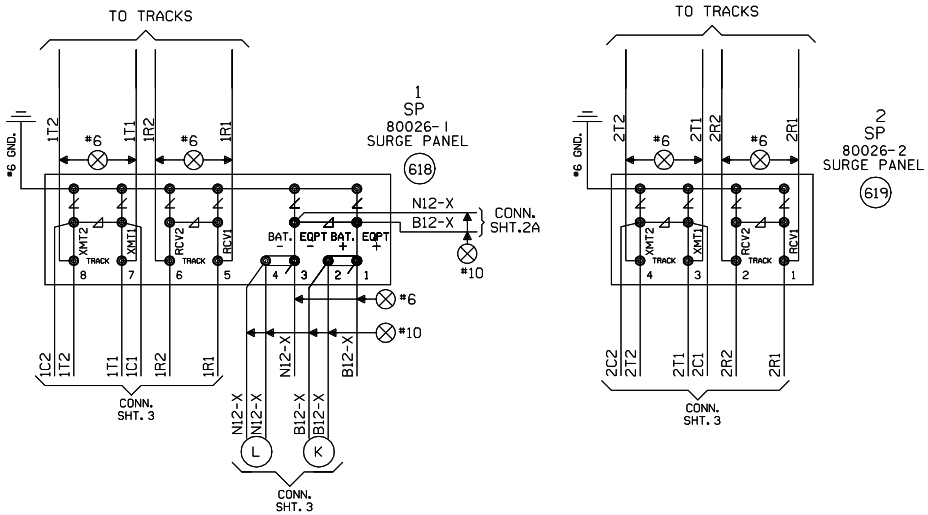

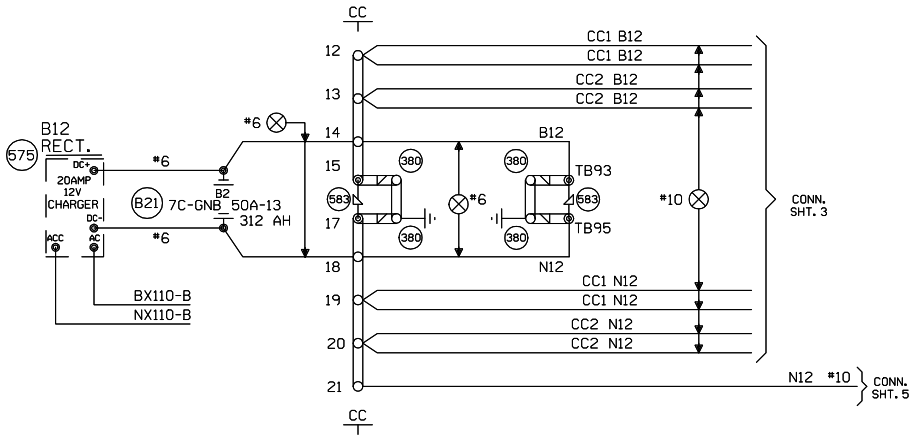

NEW SHEET

					Designed: 03/08/10 INSTALL FLS/GATES & CONSTANT WARNING MOCKINGBIRD LANE M.P. 17.30 Rec#: WO#: 04725 /RLT IS: / /CTC/JTB	MODIFICATION LEVEL Q. A. LAST LEVEL CHECKED DS LAST LEVEL MOD THIS TYPICAL DS LAST LEVEL BY DESIGNER DS CHANGED FROM TYPICAL? Y REV 09.02.09 4K 4TKSPGFC.4	UNION PACIFIC QUALITY PRODUCTIVITY SAFETY SIGNAL DESIGN	Date: 03/08/10 Des: CTC Chk: RLT AFE: 04725	UNION PACIFIC RAILROAD GRANITE CITY, ILLINOIS MOCKINGBIRD LANE ALTON AND SOUTHERN GATEWAY SUB. Office of Sr AVP Engineering - Signal/TCO Omaha, Nebraska	Sh.: 4 DOT 846964R MP: 17.30 ID: 32021730.4X

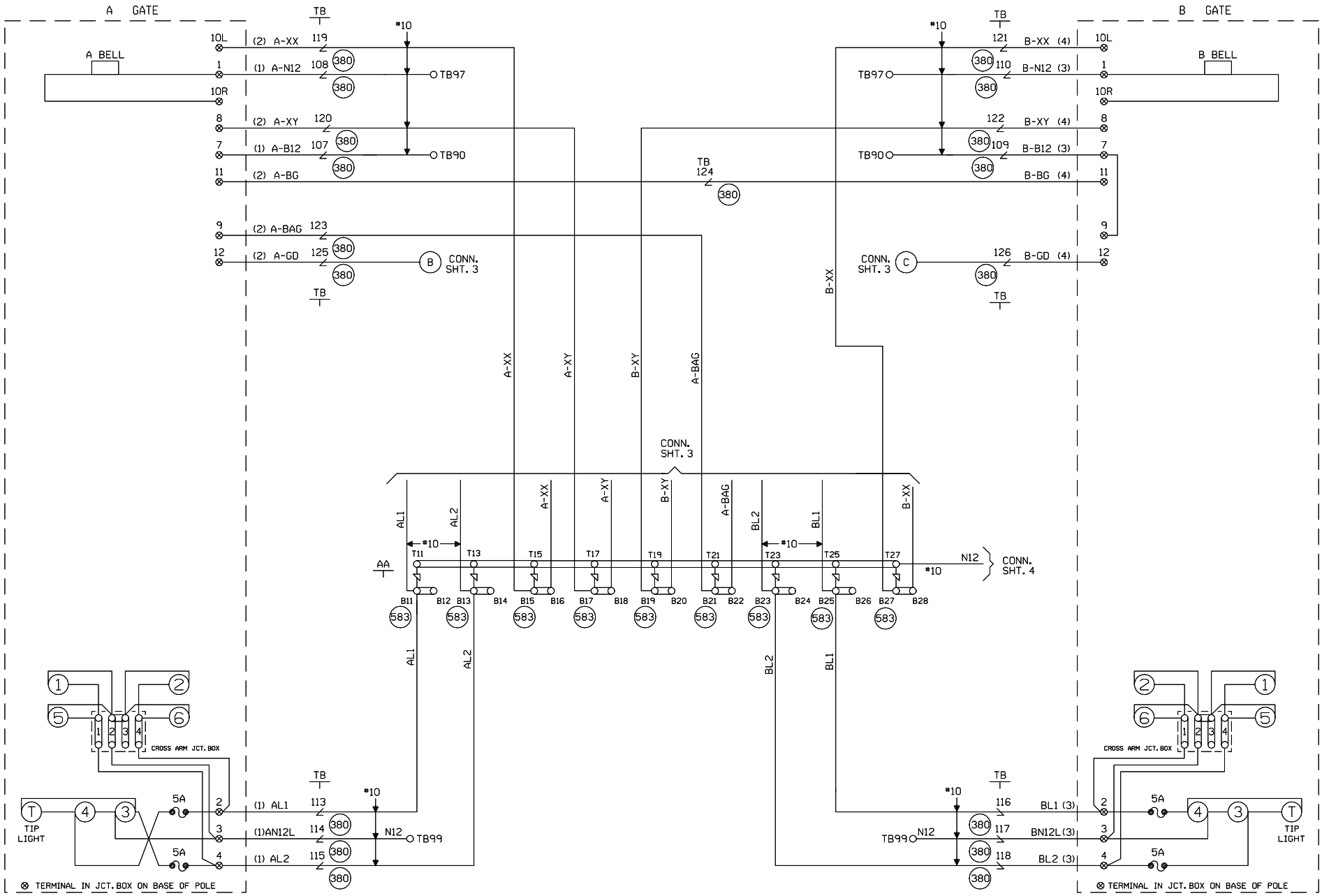

CABLE TABULATION

CABLE NO. 1 5C. NO.6 U.G.B.T. TO GATE A
CABLE NO. 2 7C. NO.14 U.G.B.T. TO GATE A
CABLE NO. 3 5C. NO.6 U.G.B.T. TO GATE B
CABLE NO. 4 7C. NO.14 U.G.B.T. TO GATE B

NEW SHEET

Designed: 03/08/10
INSTALL FLS/GATES & CONSTANT WARNING MOCKINGBIRD LANE M.P. 17.30
Rec#: WO#: 04725
IS: /RLT / /CTC/JTB

MODIFICATION LEVEL	
O. A. LAST LEVEL CHECKED	DS
LAST LEVEL MOD THIS TYPICAL	DS
LAST LEVEL BY DESIGNER	DS
CHANGED FROM TYPICAL?	Y

REV 09.02.09 4K GFCTYP.5

UNION PACIFIC
QUALITY PRODUCTIVITY SAFETY
SIGNAL DESIGN

Date: 03/08/10
Des: CTC
Chk: RLT
AFE: 04725

UNION PACIFIC RAILROAD
GRANITE CITY, ILLINOIS
MOCKINGBIRD LANE
ALTON AND SOUTHERN GATEWAY SUB.
Office of Sr AVP Engineering - Signal/TCO Omaha, Nebraska

Sh.: 5
DOT 846964R
MP: 17.30
ID: 32021730.5X

WCH 3593-E

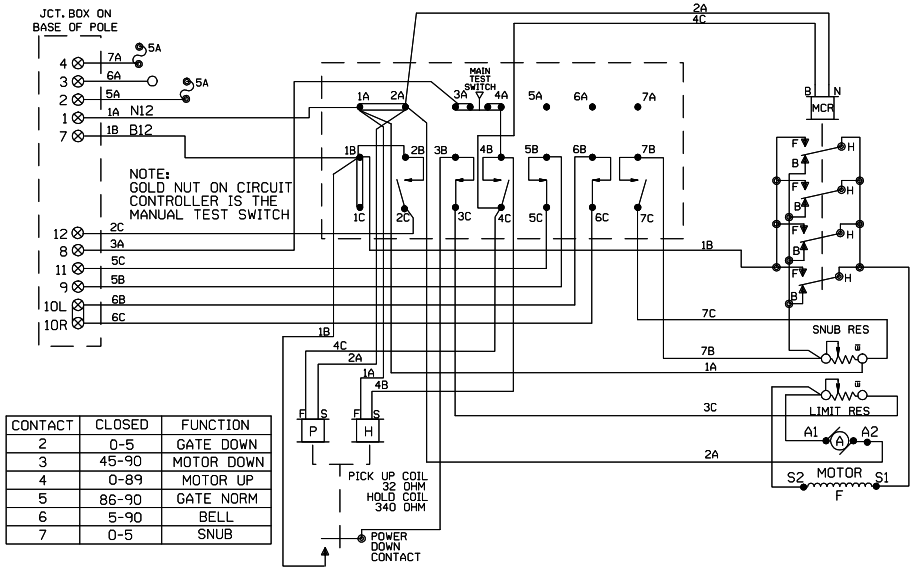

CONTACT	CLOSED	FUNCTION
2	0-5	GATE DOWN
3	45-90	MOTOR DOWN
4	0-89	MOTOR UP
5	86-90	GATE NORM
6	5-90	BELL
7	0-5	SNUB

WCH 3597-E

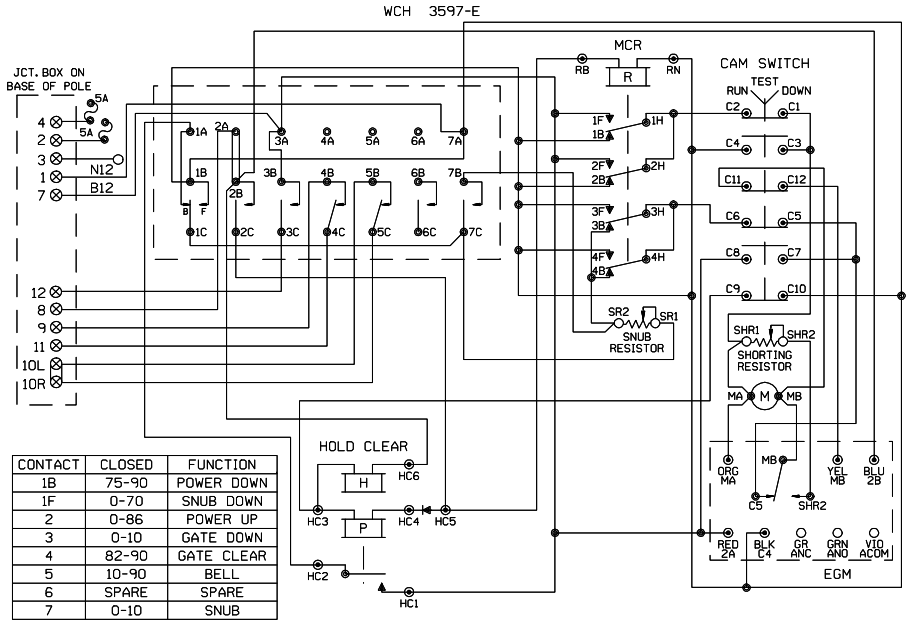

CONTACT	CLOSED	FUNCTION
1B	75-90	POWER DOWN
1F	0-70	SNUB DOWN
2	0-86	POWER UP
3	0-10	GATE DOWN
4	82-90	GATE CLEAR
5	10-90	BELL
6	SPARE	SPARE
7	0-10	SNUB

WCH 3597-RB

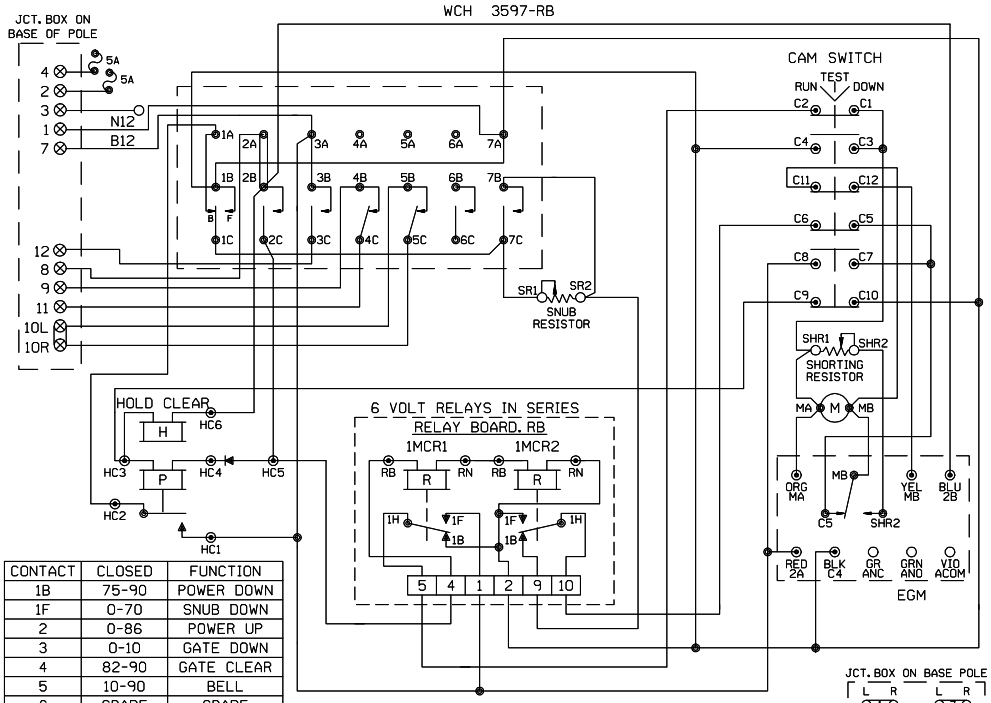

CONTACT	CLOSED	FUNCTION
1B	75-90	POWER DOWN
1F	0-70	SNUB DOWN
2	0-86	POWER UP
3	0-10	GATE DOWN
4	82-90	GATE CLEAR
5	10-90	BELL
6	SPARE	SPARE
7	0-10	SNUB

JCT. BOX ON BASE POLE

L	R	L	R
1	1	7	7
2	2	8	8
3	3	9	9
4	4	10	10
5	5	11	11
6	6	12	12

SHOW TYPE MECH. INSTALLED

ALL MECHANISMS SHOWN IN THE CLEAR POSITION

SAFETRAN S-60

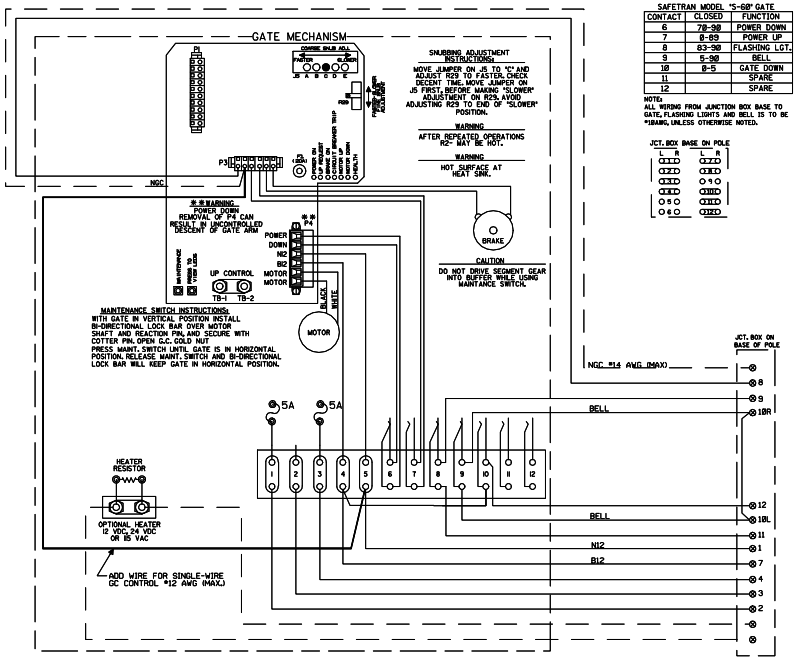

SAFETRAN MODEL "S-60" GATE

CONTACT	CLOSED	FUNCTION
6	78-90	POWER DOWN
7	0-89	POWER UP
8	83-90	FLASHING LGT.
9	5-90	BELL
10	0-5	GATE DOWN
11		SPARE
12		SPARE

NOTE:
ALL WIRING FROM JUNCTION BOX BASE TO GATE, FLASHING LIGHTS AND BELL IS TO BE #18AWG, UNLESS OTHERWISE NOTED.

JCT. BOX BASE ON POLE

L	R	L	R
1	1	7	7
2	2	8	8
3	3	9	9
4	4	10	10
5	5	11	11
6	6	12	12

NEW SHEET

Designed: 03/08/10	MODIFICATION LEVEL		UNION PACIFIC	Date: 03/08/10
INSTALL FLS/GATES & CONSTANT WARNING MOCKINGBIRD LANE M.P. 17.30	Q. A. LAST LEVEL CHECKED	DS	QUALITY PRODUCTIVITY SAFETY	Des: CTC
Rec#: WO#: 04725 /RLT	LAST LEVEL MOD THIS TYPICAL	DS	SIGNAL DESIGN	Chk: RLT
Iss: / /CTC/JTB	LAST LEVEL BY DESIGNER	DS		AFE: 04725
	CHANGED FROM TYPICAL?	N		
	REV 09.02.09 4K GWIRING.7			

UNION PACIFIC RAILROAD

GRANITE CITY, ILLINOIS
MOCKINGBIRD LANE
ALTON AND SOUTHERN GATEWAY SUB.

Office of Sr AVP Engineering - Signal/TCO Omaha, Nebraska

Sh.:	6
DOT	846964R
MP:	17.30
ID:	32021730.6X

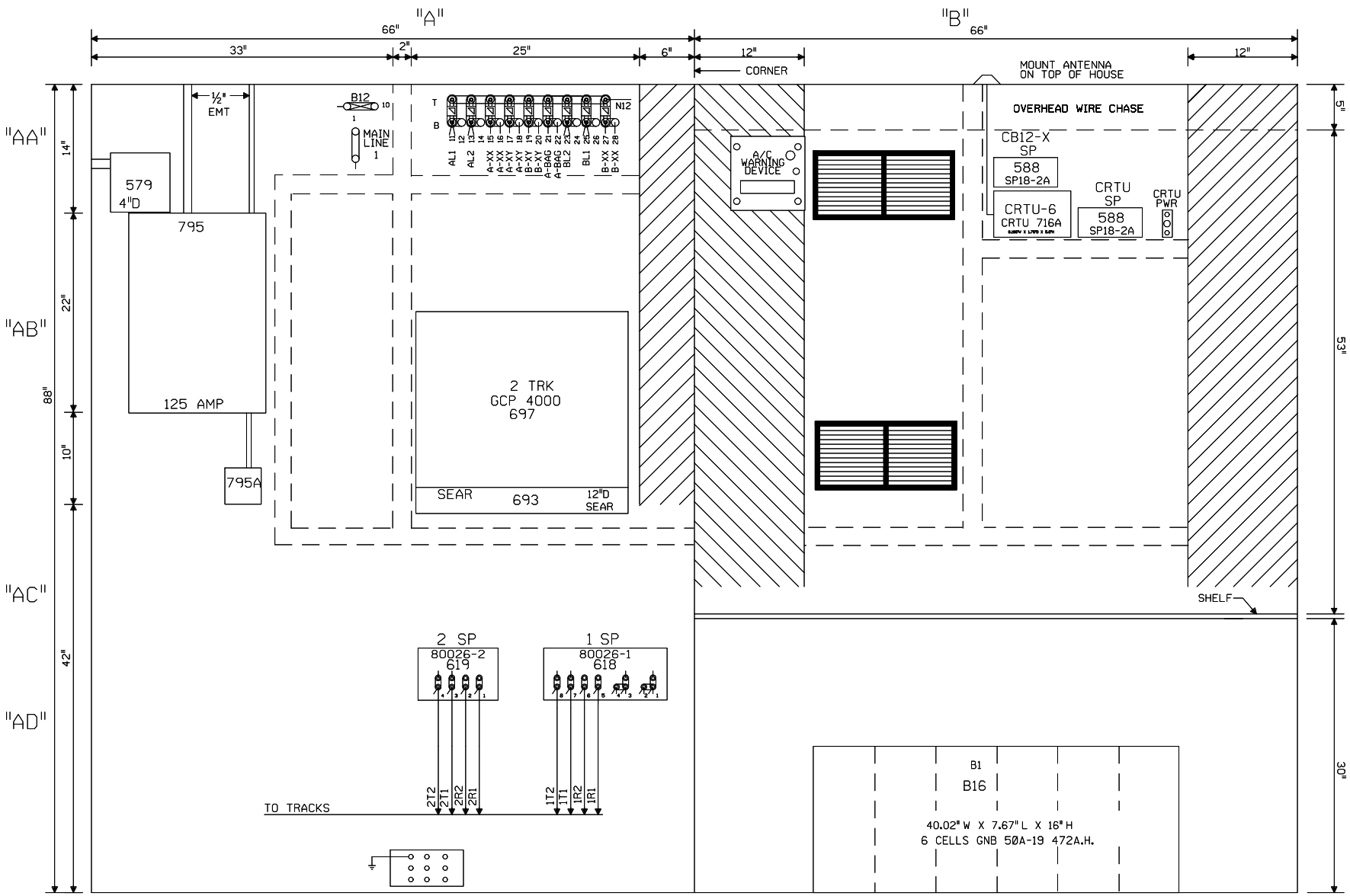

NOTE: ALL DIMENSIONS SHOWN
ARE APPROXIMATE.

NEW SHEET

					Designed: 03/08/10 INSTALL FLS/GATES & CONSTANT WARNING MOCKINGBIRD LANE M.P. 17.30 Rec#: WO#: 04725 IS: /RLT /CTC/JTB	MODIFICATION LEVEL Q. A. LAST LEVEL CHECKED DS LAST LEVEL MOD THIS TYPICAL DS LAST LEVEL BY DESIGNER DS CHANGED FROM TYPICAL? Y REV 09.02.09 4K 4TKGFC.8	UNION PACIFIC QUALITY PRODUCTIVITY SAFETY SIGNAL DESIGN	Date: 03/08/10 Des: CTC Chk: RLT AFE: 04725	UNION PACIFIC RAILROAD GRANITE CITY, ILLINOIS MOCKINGBIRD LANE ALTON AND SOUTHERN GATEWAY SUB. Office of Sr AVP Engineering - Signal/TCO Omaha, Nebraska	Sh.: 7 DOT 846964R MP: 17.30 ID: 32021730.7X

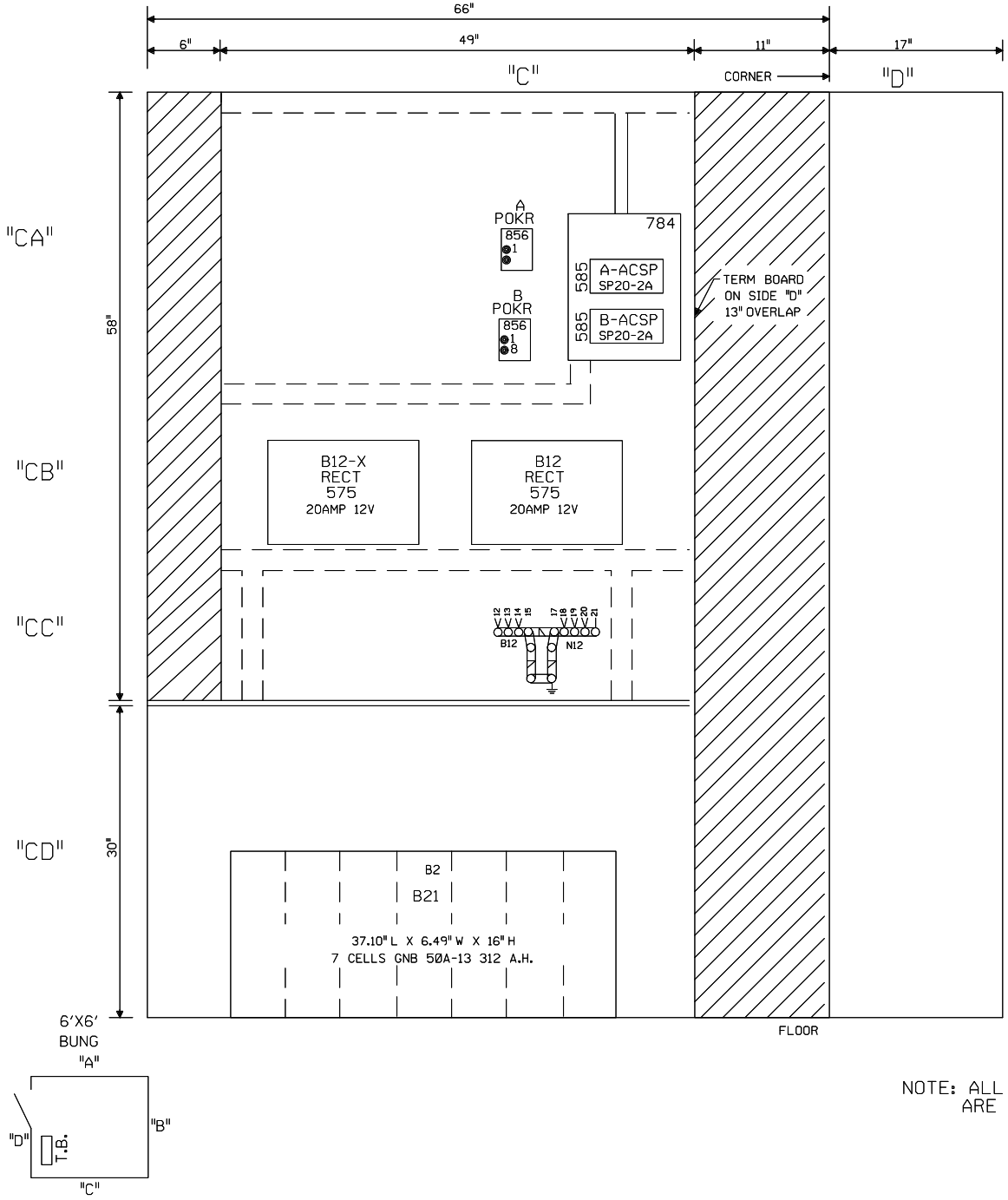

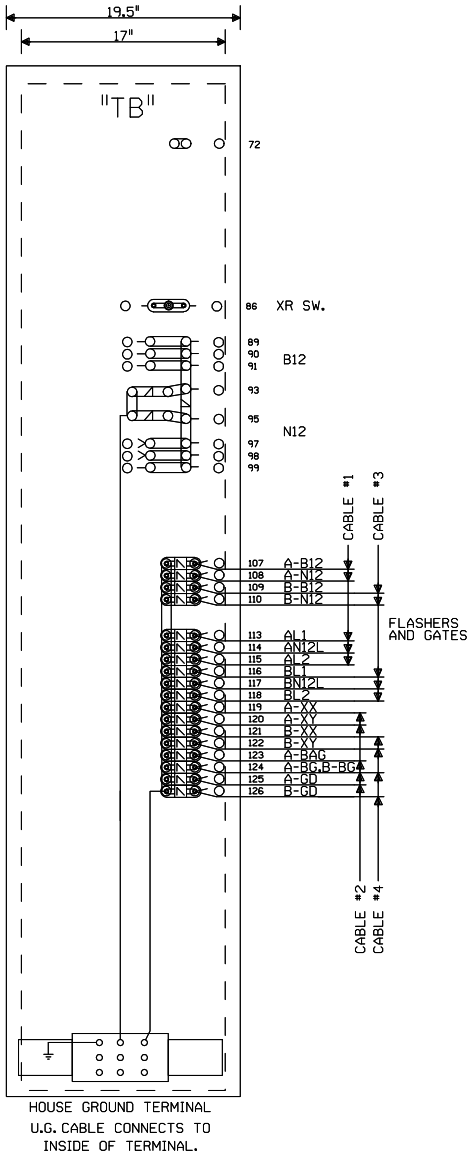

NOTE: ALL DIMENSIONS SHOWN
ARE APPROXIMATE.

NEW SHEET

					Designed: 03/08/10 INSTALL FLS/GATES & CONSTANT WARNING MOCKINGBIRD LANE M.P. 17.30 Rec*: WO*: 04725 Is: /RLT /CTC/JTB	MODIFICATION LEVEL Q.A. LAST LEVEL CHECKED LAST LEVEL MOD THIS TYPICAL LAST LEVEL BY DESIGNER CHANGED FROM TYPICAL? REV 09.02.09 4K GFC.9	DS DS DS Y	UNION PACIFIC QUALITY PRODUCTIVITY SAFETY SIGNAL DESIGN	Date: 03/08/10 Des: CTC Chk: RLT AFE: 04725	**UNION PACIFIC RAILROAD** GRANITE CITY, ILLINOIS MOCKINGBIRD LANE ALTON AND SOUTHERN GATEWAY SUB. Office of Sr AVP Engineering - Signal/TCO Omaha, Nebraska	Sh.: 8 DOT 846964R MP: 17.30 ID: 32021730.8X

				Designed: 03/08/10 M.P. 17.30 Rec#: WO#: 04725 IS: CTC/ITB	REMOVE S-PMD & RECIRCUIT H-PMD TO PROTECT MAIN TRACK RCT 5/17/89	ST. LOUIS 9-16-81 DRAWN BY MCB CHECKED CGM A.F.E. 2351 10-27-82	A.& S. R.R.CO. AAR-DOT 846 964 R DW. 172 FL. (MOCKINGBIRD LANE) (GRANITE CITY, IL.) (NAMEOKI TOWNSHIP) SH. 1 PLACED IN SERVICE_____ BY _____

AC RECEIVED RECORD NO.

MAY 24 2010 16938

NOTES:

1. CONNECT TO HEAVY DUTY CONTACTS & SHOW CONTACT NUMBERS
2. CONNECT TO REGULAR DUTY CONTACTS & SHOW CONTACT NUMBERS
3. SHOW HEAVY DUTY CONTACTS & RELAY RES.
4. WIRE # 16 AWG - 1 CONDUCTOR STRANDED S.D. COPPER 19 STRANDS, INSULATED WITH 2/64" ETHYLENE PROPOLENE, 1/64" NEOPRENE JACKET, 10/64" O.D. RATED 300 V. 18A, CASE WIRE.
5. WIRE # 12 AWG - 1 CONDUCTOR STRANDED S.D. COPPER 19 STRANDS, INSULATED WITH 3/64" ETHYLENE PROPOLENE, 1/64" NEOPRENE JACKET, 14/64" O.D. RATED 600 V. 26A. CASE WIRE.
6. SAME WIRE AS 5 BUT TW. IN PAIRS.
7. ALL WIRES CONNECTED TO BATT. TO BE TW. # 10 AWG - 1 CONDUCTOR SOLID, S.D. COPPER ANNEALED, INSULATED WITH 2/64" CROSS LINK POLYETHYLENE, TYPE RHH OR RHW U.S.E. 13/64" O.D. RATED 75° C. WET, 90° C. DRY, RATED 600 V., 42 A. BATTERY WIRE.
8. WIRE # 10 AWG - 1 CONDUCTOR STRANDED S.D COPPER 19 STRANDS, INSULATED WITH 3/64" ETHYLENE PROPOLENE, 1/64" NEOPRENE JACKET, 1/4" O D. RATED 600 V. 26 A. CASE WIRE
9. SAME WIRE AS 8 BUT TW. IN PAIRS. 2C # 6 TO BE USED ON ALL TRACK CONN. THE SUM TOTAL OF THE MD. REC & XMTR TRACK WIRE LENGTH SHOULD NOT EXCEED 500'.

TOP OF FOUNDATION TO BE AT SAME ELEVATION AS THE SURFACE OF THE TRAVELED WAY & NO MORE THAN 4" ABOVE THE SURFACE OF THE GROUND, WITH CURB TO BE MAXIMUM OF 4" ABOVE CURB INSTRUMENT HOUSE TO BE SET A MINIMUM OF 50' FROM EDGE OF TRAVELWAY WHERE POSSIBLE. ALL LIGHTS TO BE 12" ROUNDELS. (LEX-C HEADS)

POWER OFF INDICATOR.

==== 4" X 63' PIPE

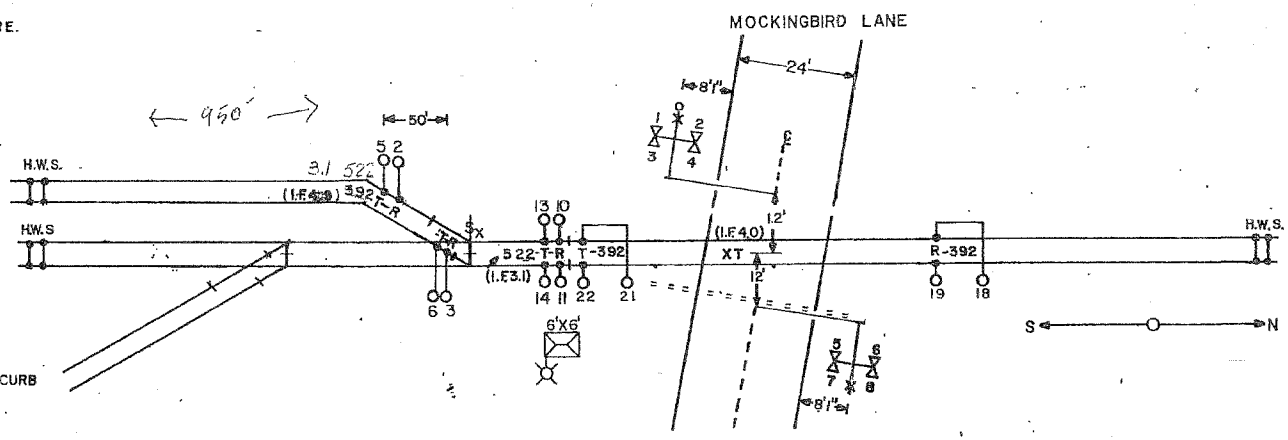

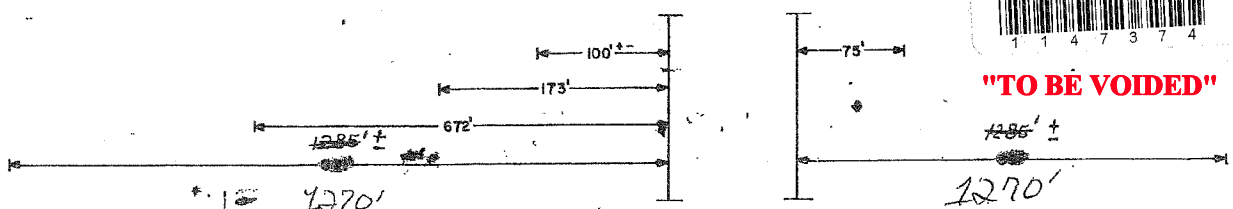

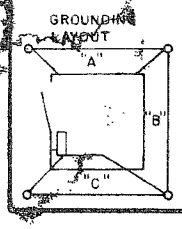

0045

1 1 4 7 3 7 4

"TO BE VOIDED"

GREEN - 1

					Designed: 03/08/10 M.P. 17.30 Rec#: 15: WO#: 04725 CTC/ITB	ST LOUIS 9-16-81 DRAWN BY MCB CHECKED A.F.E. 235 L 10-27-82	A. & S. R.R. CO. DW. 172 FL. (MOCKINGBIRD LANE) (GRANITE CITY, IL.) (NAMEOKI TOWNSHIP) SH. 2 PLACED IN SERVICE ___ BY ___

AC RECEIVED RECORD NO.
MAY 24 2010 16938

0045
1 1 4 7 3 7 5

"TO BE VOIDED"

JUMPER WIRES T1-T2 R1-R2 #22 STRANDED
SA1 LIGHTNING ARRESTOR T11 BLACK 150-300 VOLTS
" " " ALT. SUPPLIER GREEN 150-300 V

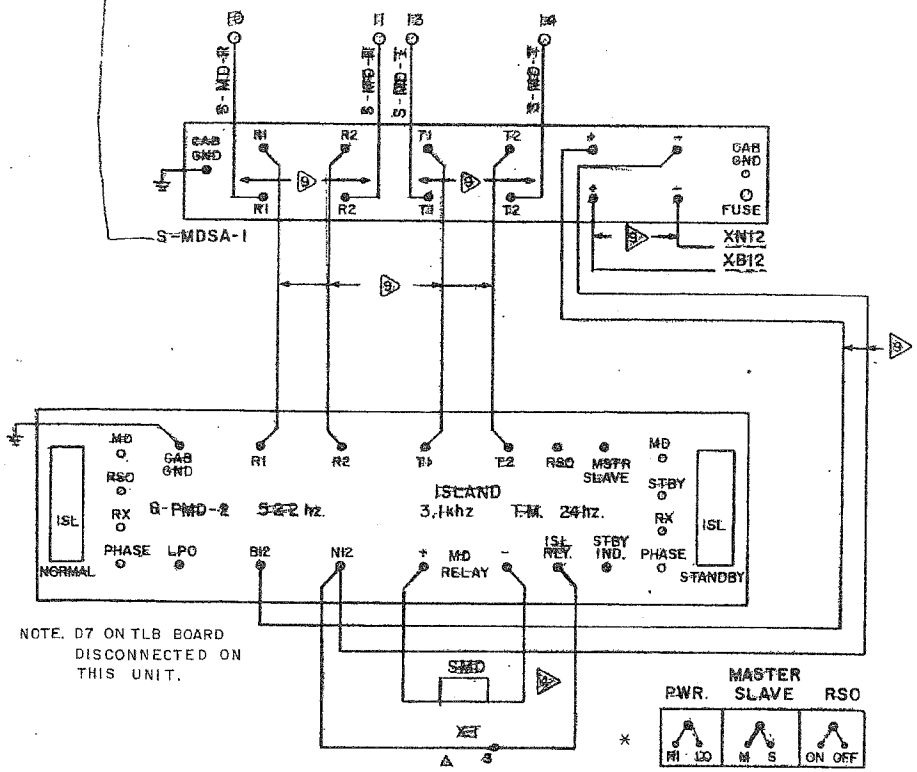

NOTE. D7 ON TLB BOARD DISCONNECTED ON THIS UNIT.

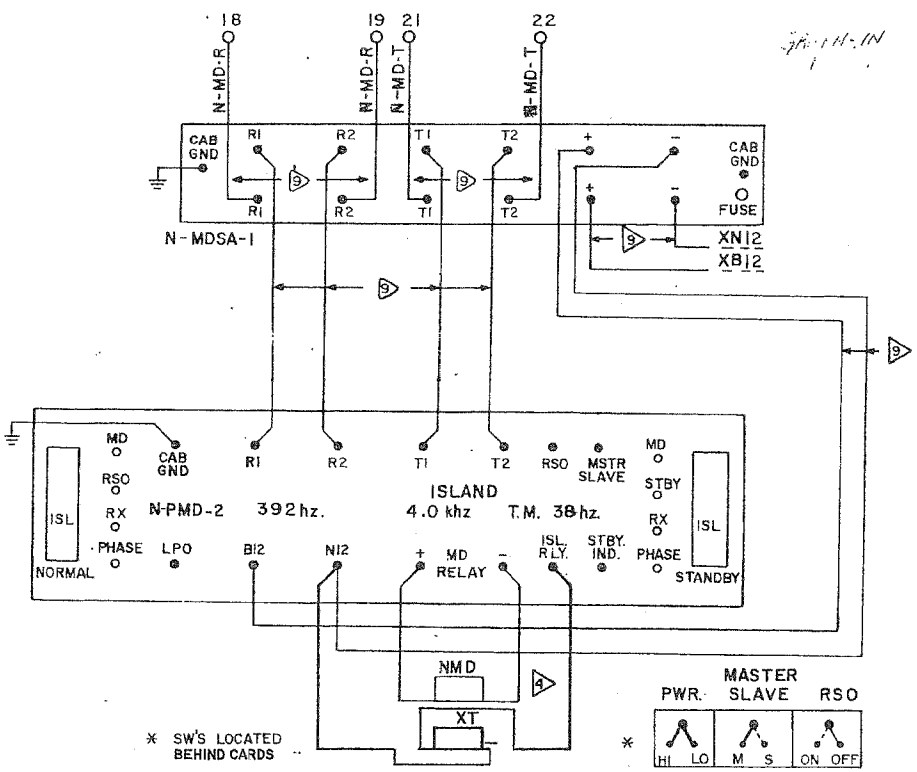

* SW'S LOCATED BEHIND CARDS

					Designed: 03/08/10 M.P. 17.30 Rec'd: ISI WO#: 04725 CTC/JTB	ST. LOUIS 9-16-81 DRAWN BY MCB CHECKED CGM A.F.E. 2351 10-27-82	A. & S. R.R.CO. DW. 172 FL. (MOCKINGBIRD LANE) (GRANITE CITY, IL.) (NAMEOKI TOWNSHIP) SH. 3 PLACED IN SERVICE _____ BY _____

AS RECEIVED RECORD NO.
MAY 24 2010 16938
0045
114736

257A

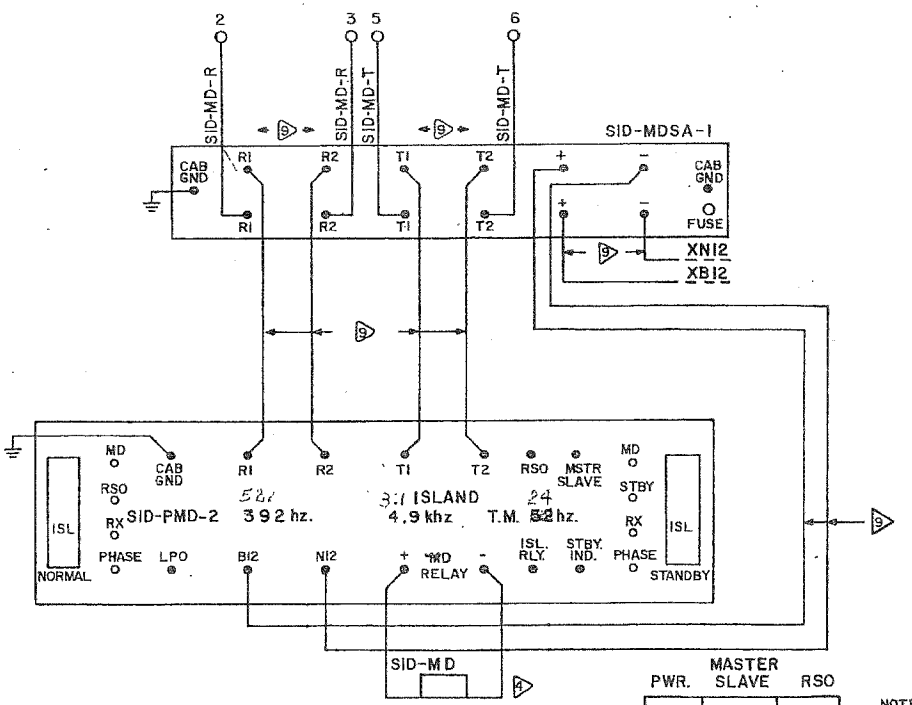

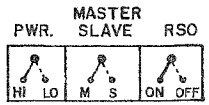

LOCATED BEHIND CARDS

NOTE: RSO SWITCH MUST BE IN "ON" POSITION.

"TO BE VOIDED"

					Designed: 03/08/10 M.P. 17.30 Rec#: WO#: 04725 IS: / /CTC/JTB	ST. LOUIS 9-16-81 DRAWN BY MCB CHECKED com A.F.E. 2351 10-27-82

A. & S. R. R. CO.
DW. 172 FL. (MOCKINGBIRD LANE) (GRANITE CITY, IL.) (NAMEOKI TOWNSHIP) SH. 4

PLACED IN SERVICE _____ BY _____

256

AC RECEIVED RECORD NO.
MAY 24 2010 16938

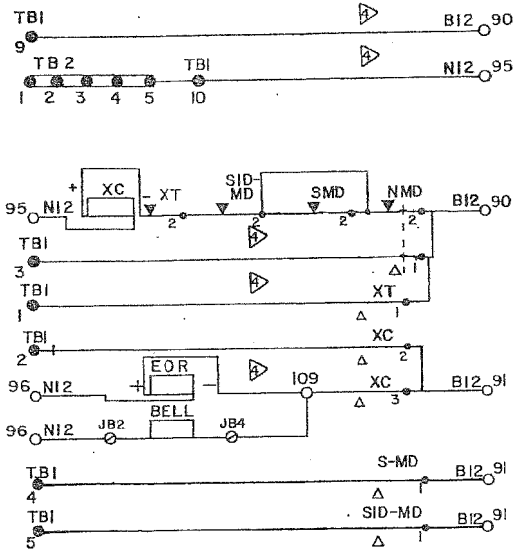

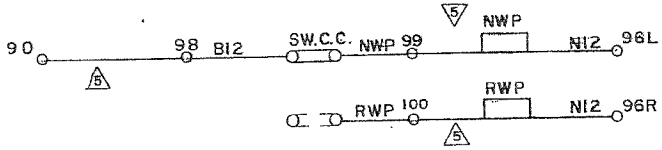

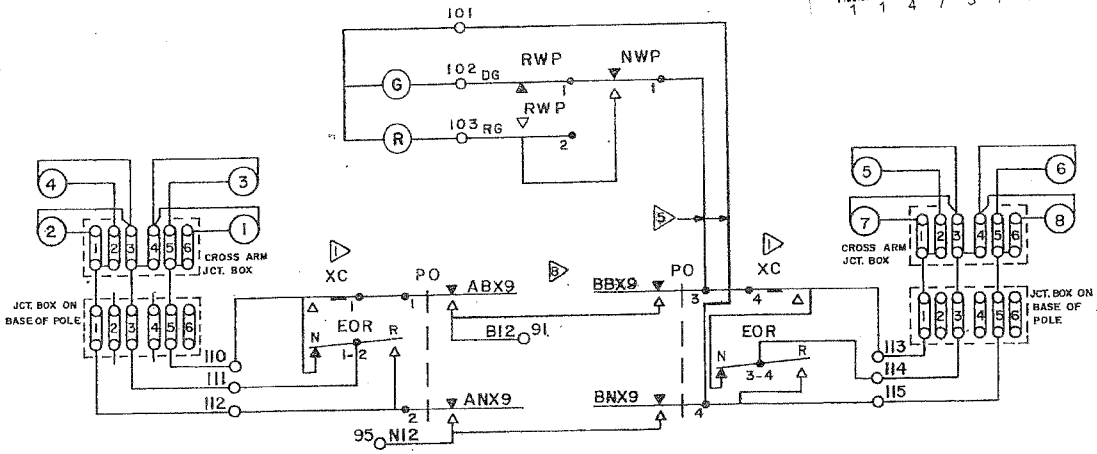

"TO BE VOIDED"

● MONITOR TERMINAL BOARD

Designed: 03/08/10
M.P. 17.30
Rec'd: ISI
WO#: 04725
CTC/JTB

ST. LOUIS 9-16-81
DRAWN BY MCB
CHECKED CCM
A.F.E. 2351
10-27-82

A. & S. R. R. CO.
DW. 172 FL. (MOCKINGBIRD LANE) (GRANITE CITY, IL.) (NAMEOKI TOWNSHIP) SH. 5
PLACED IN SERVICE ____ BY ____

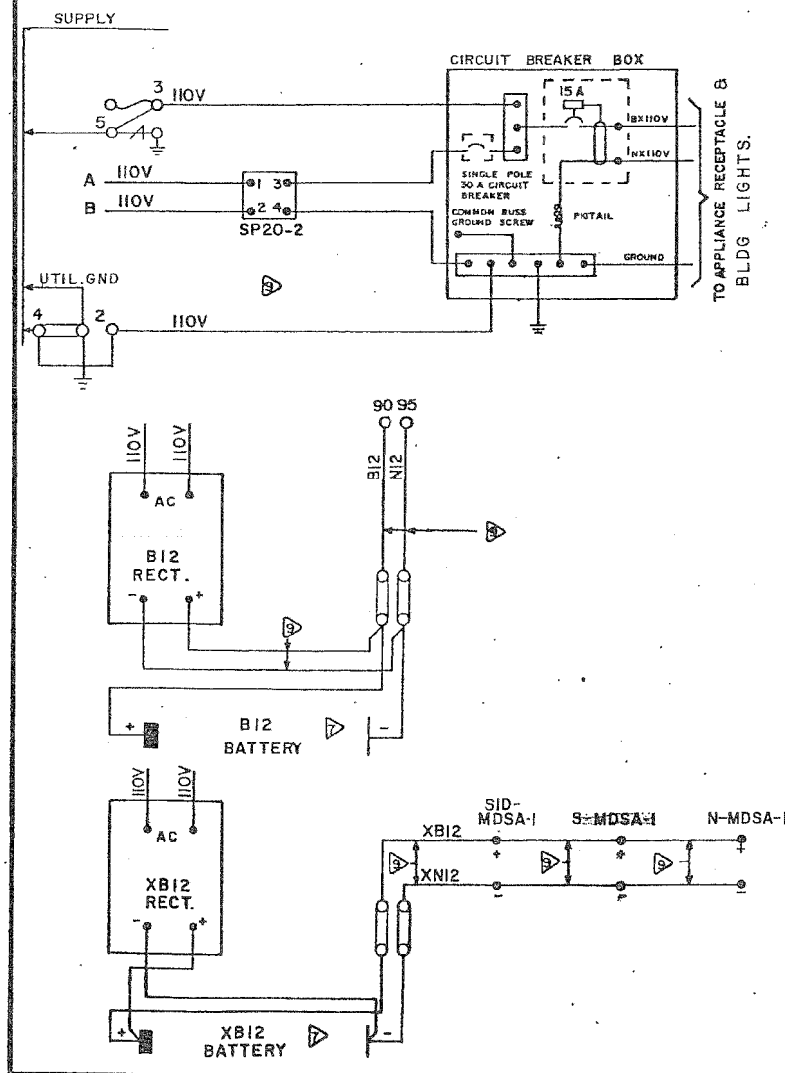

MONITOR FUNCTION CHART

FUNCTION	DIGIT	NORMAL
XT	1	0
XC	2	0
NMD	3	0
~~SMD~~	4	0
SID-MD	5	0
	6	
	7	
	8	

AC RECEIVED RECORD NO.
MAY 24 2010 16938
0045
1 1 4 7 3 7 6

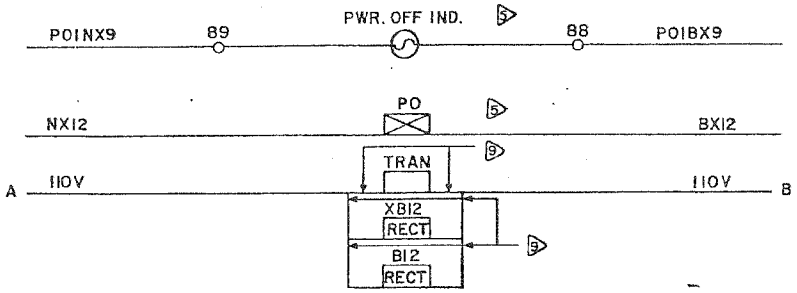

"TO BE VOIDED"

GREEN-1

257

Designed: 03/08/10
M.P. 17.30
Rec'd: 15:
WO#: 04725
/CTC/JTB

ST. LOUIS 9-16-81
DRAWN BY MCB
CHECKED com
A.F.E. 2351
10-27-82

A. & S. R. R. CO.
DW.172 FL. (MOCKINGBIRD LANE) (GRANITE CITY, IL.) (NAMEOKI TOWNSHIP) SH. 6
PLACED IN SERVICE _____ BY _____

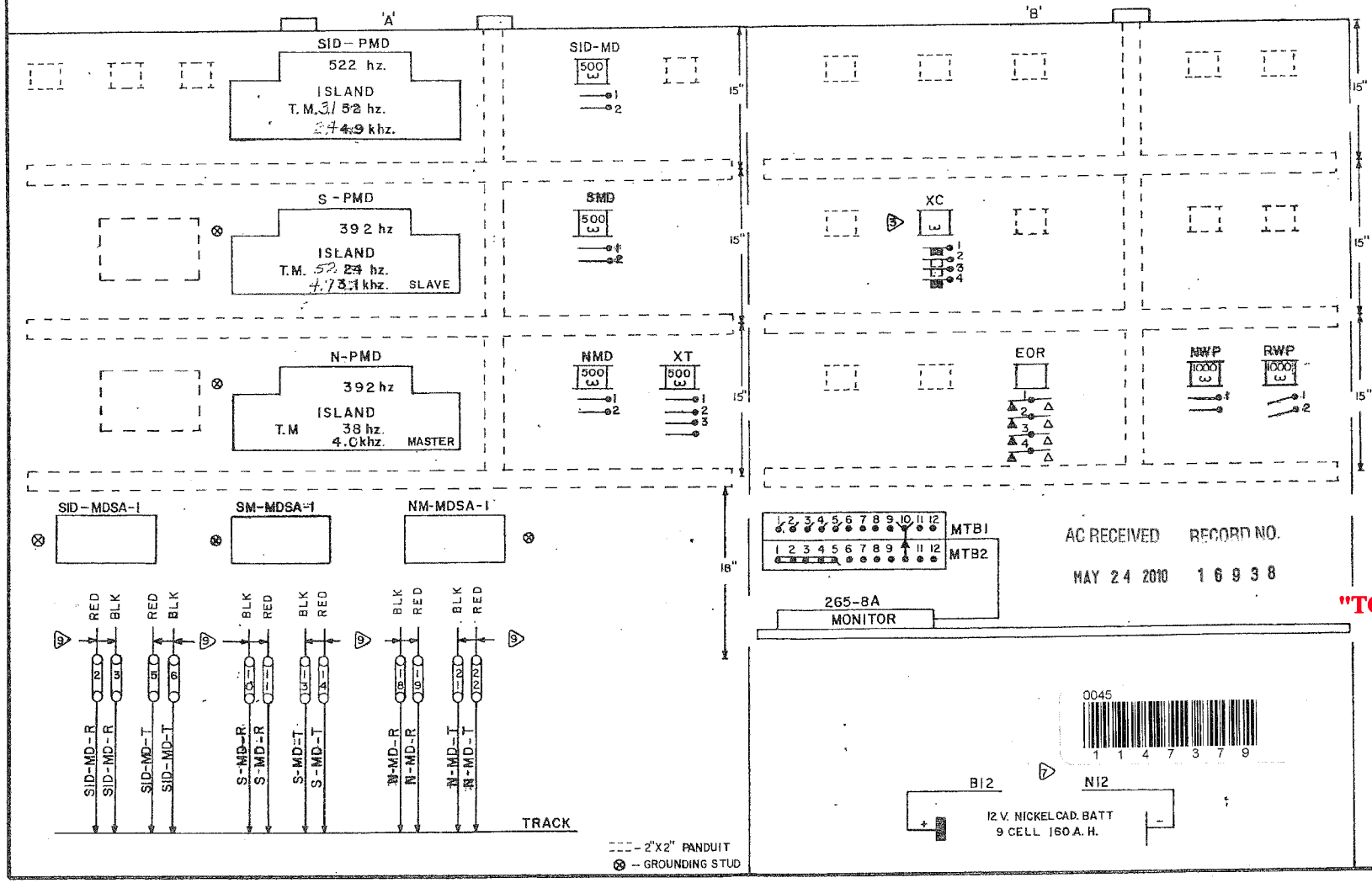

AC RECEIVED RECORD NO.
MAY 24 2010 16938

"TO BE VOIDED"

258

Designed: 03/08/10
M.P. 17.30
Rec'd: 1St
WO#: 04725
/CTC/JTB

ST. LOUIS 9-16-81
DRAWN BY MCB
CHECKED
A.F.E

A. & S. R.R. CO.
DW. 172 FL. (MOCKINGBIRD LANE) (GRANITE CITY, IL.) (NAMEOKI TOWNSHIP) SH. 7
PLACED IN SERVICE BY

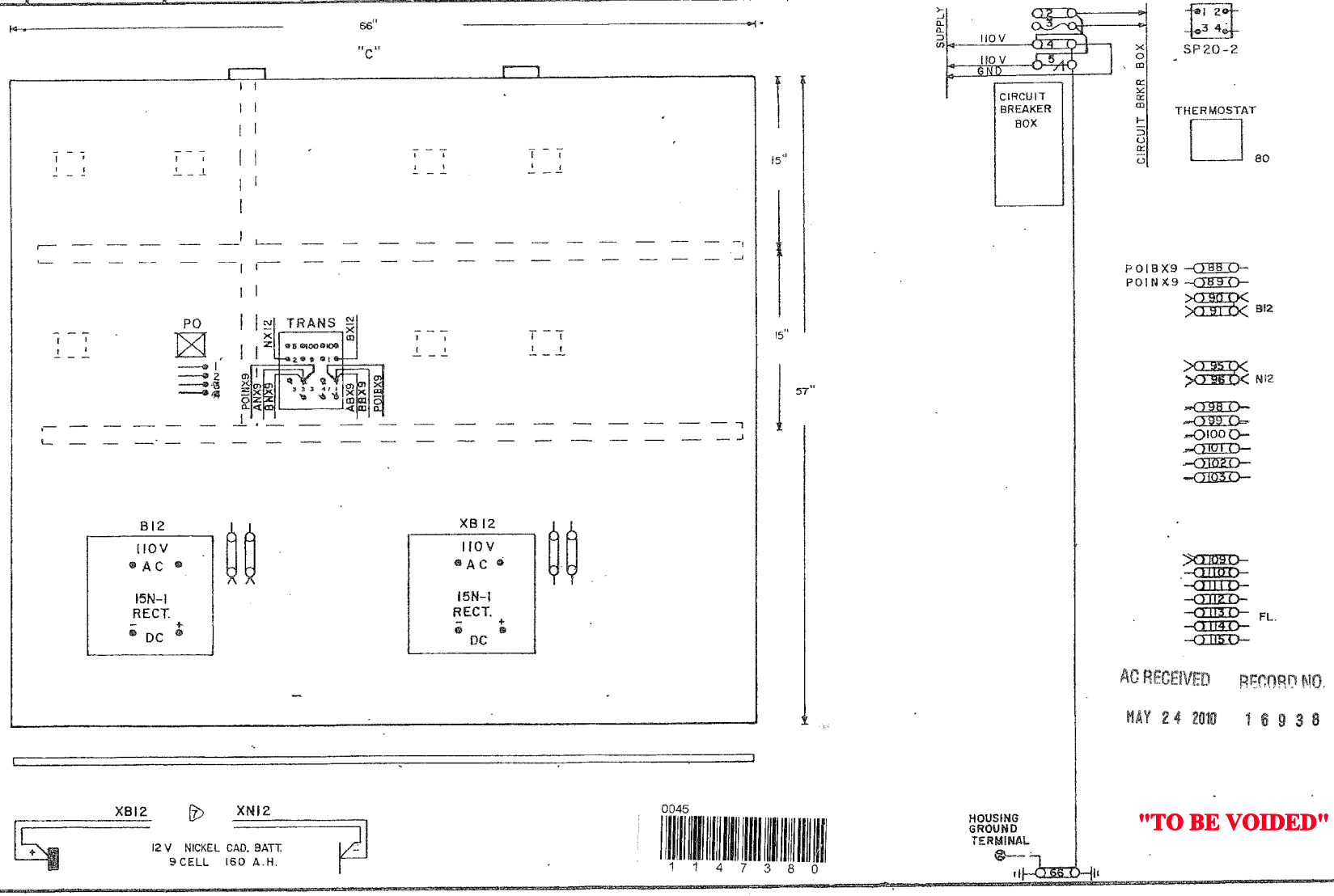

AC RECEIVED RECORD NO.
MAY 24 2010 16938

"TO BE VOIDED"