$WATERMARK

REVISIONS				
NO.	DATE	BY	DESCRIPTION	APP. BY
1	25/10/10	NAD	PED GATES CIRCUIT REV	BJW
2				
3				
4				
5				

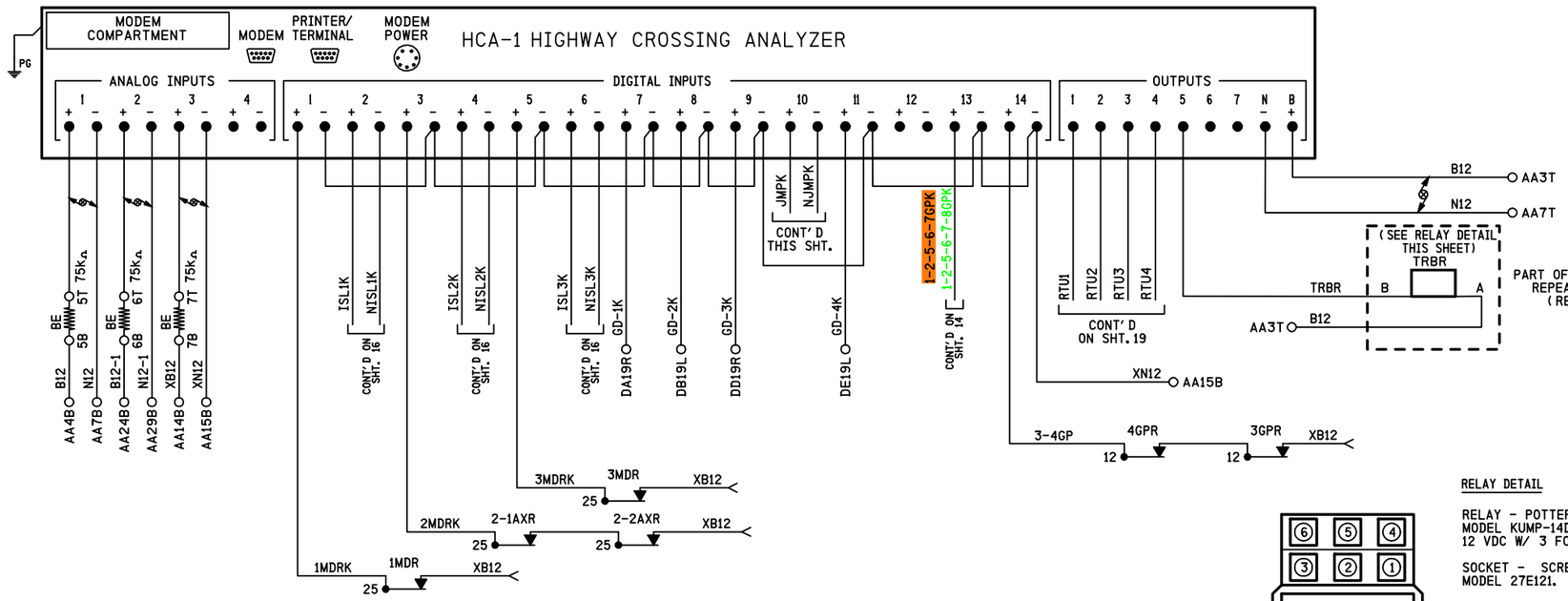

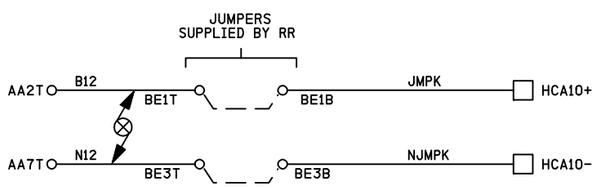

RELAY DETAIL

RELAY - POTTER & BRUMFIELD
MODEL KUMP-14D18-12 SOCKET MOUNTABLE
12 VDC W/ 3 FORM C CONTACTS.

SOCKET - SCREW TERMINAL
MODEL 27E121.

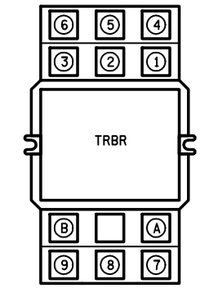

LOCATED OVER ENTRY DOOR

RELAY WIRING DIAGRAM (REAR VIEW)

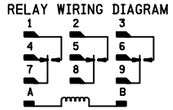

NOTE:
SOCKET NUMBERING CORRESPONDS DIRECTLY WITH RELAY NUMBERING.
(COIL SHOWN ENERGIZED)

NOTES:

1. ALL WIRING ON THIS SHEET TO BE #16 UNLESS OTHERWISE NOTED.
2. DENOTES TWISTED PAIR.

PROPOSED
DES. No. _____
GREEN-IN ORANGE-OUT
AS INSTALLED
DATE _____
BY _____

PROPOSED
DES. No. _____
RED-IN YELLOW-OUT
AS INSTALLED
DATE _____
BY _____

8' X 10' BUNGALOW

PROPOSED D	PROPOSED M	PROPOSED Y	REVISIONS	D	C	COMPLETED D	COMPLETED M	COMPLETED Y	C
10	25	10	PED GATES CIRCUIT REV	NAD	BJW				

REGION SOUTHERN
SUB. MATTESON 334

SIGNALS AND COMMUNICATIONS HOMEWOOD
23 JULY 2010
DES. MKN
CH. DTB

HIGHWAY CROSSING ANALYZER
HCA-1
MAIN STREET
MATTESON, IL

MTS-021.61-18

SAFETRAN SYSTEM CORP.
LOUISVILLE DIVISION, LOUISVILLE, KY

SAFETRAN SYSTEMS CORPORATION

DES.: MKN	DATE: 23/07/10	JOB NO.: PICA10249	
CKD.: DTB	ISSUE DATE: N/A	EST. NO.:	
DRN.: APL	PLAN NO.: N/A	SHEET 18 OF 26	
P TIME: 15:56	P DATE: 25-OCT-2010	CAD ID.: MTS-021.61-18	

mts-021.61-18.dgn
25-OCT-2010

$WATERMARK

REVISIONS				
NO.	DATE	BY	DESCRIPTION	APP. BY
1				
2				
3				
4				
5				

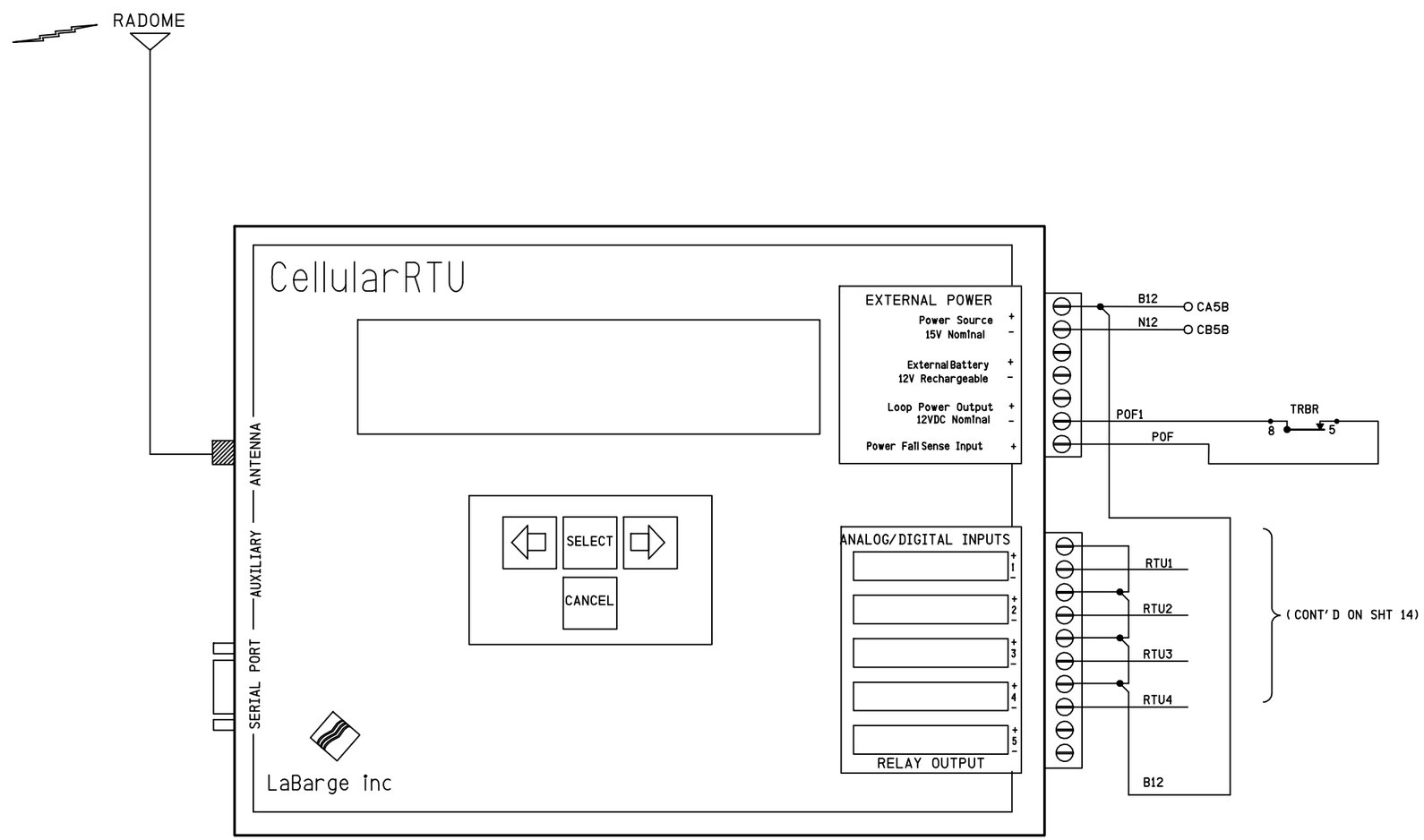

PROPOSED
DES. No. _____
RED-IN YELLOW-OUT
AS INSTALLED
DATE _____
BY _____

8' X 10' BUNGALOW

PROPOSED D	PROPOSED M	PROPOSED Y	REVISIONS	D	C	COMPLETED D	COMPLETED M	COMPLETED Y	C

REGION SOUTHERN
SUB. MATTESON 334

SIGNALS AND COMMUNICATIONS HOMEWOOD
23 JULY 2010
DES. MKN
CH. DTB

RTU CIRCUITS

MAIN STREET
MATTESON, IL

MTS-021.61-19

SAFETRAN SYSTEM CORP.
LOUISVILLE DIVISION, LOUISVILLE, KY

mts-021.61-19.dgn
25-OCT-2010

SAFETRAN SYSTEMS CORPORATION

DES.: MKN	DATE: 23/07/10	JOB NO.: PICA10249
CKD.: DTB	ISSUE DATE: N/A	EST. NO.: N/A
DRN.: APL	PLAN NO.: N/A	SHEET 19 OF 26
P TIME: 15:56	P DATE: 25-OCT-2010	CAD ID.: MTS-021.61-19

$WATERMARK

REVISIONS				
NO.	DATE	BY	DESCRIPTION	APP. BY
1	25/10/10	NAD	PED GATES CIRCUIT REV	BJW
2				
3				
4				
5				

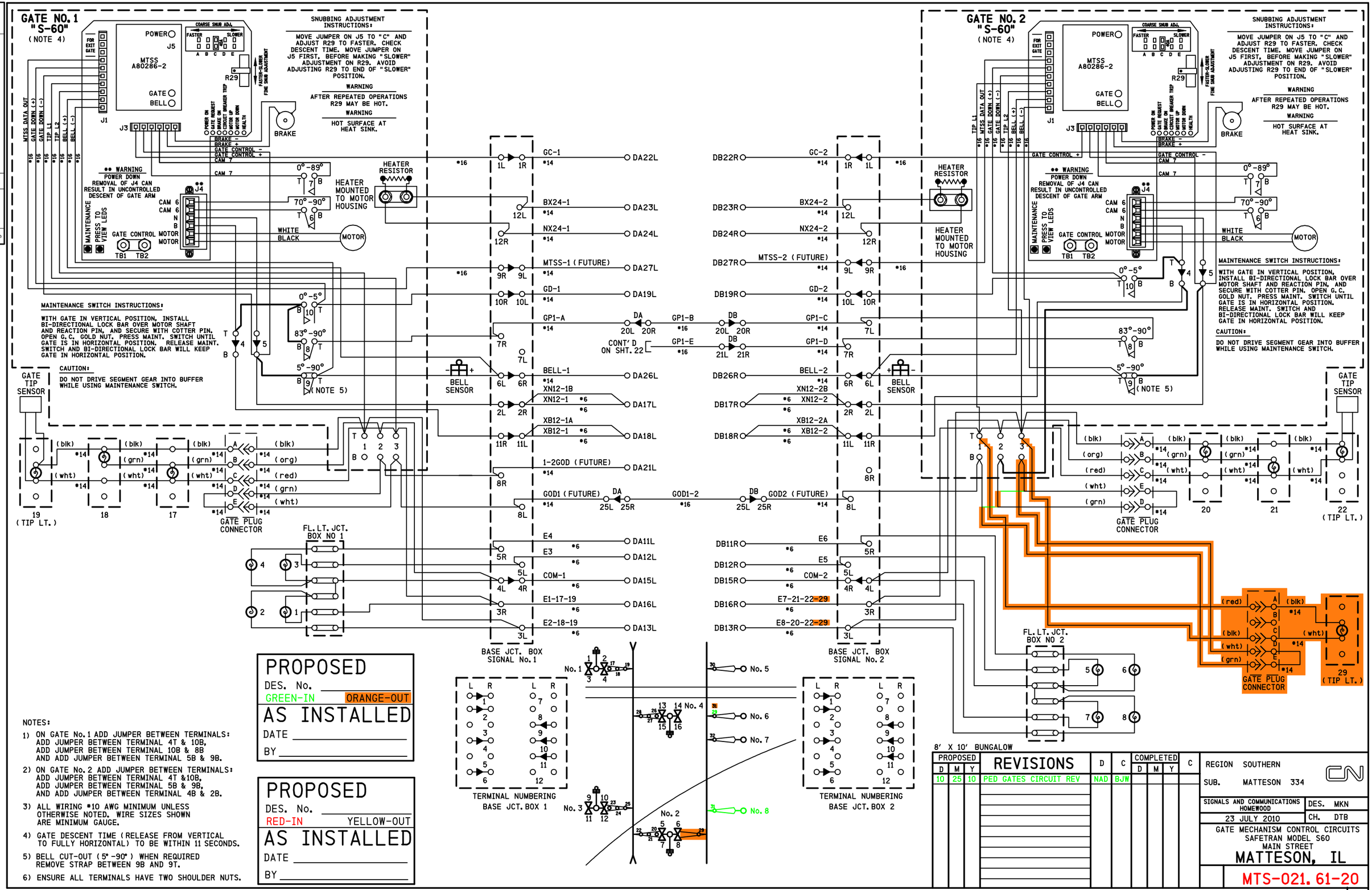

NOTES:

1) ON GATE No. 1 ADD JUMPER BETWEEN TERMINALS:
   ADD JUMPER BETWEEN TERMINAL 4T & 10B,
   ADD JUMPER BETWEEN TERMINAL 10B & 8B
   AND ADD JUMPER BETWEEN TERMINAL 5B & 9B.
2) ON GATE No. 2 ADD JUMPER BETWEEN TERMINALS:
   ADD JUMPER BETWEEN TERMINAL 4T &10B,
   ADD JUMPER BETWEEN TERMINAL 5B & 9B,
   AND ADD JUMPER BETWEEN TERMINAL 4B & 2B.
3) ALL WIRING #10 AWG MINIMUM UNLESS OTHERWISE NOTED. WIRE SIZES SHOWN ARE MINIMUM GAUGE.
4) GATE DESCENT TIME (RELEASE FROM VERTICAL TO FULLY HORIZONTAL) TO BE WITHIN 11 SECONDS.
5) BELL CUT-OUT (5°-90°) WHEN REQUIRED REMOVE STRAP BETWEEN 9B AND 9T.
6) ENSURE ALL TERMINALS HAVE TWO SHOULDER NUTS.

PROPOSED
DES. No. _____
GREEN-IN ORANGE-OUT
AS INSTALLED
DATE _____
BY _____

PROPOSED
DES. No. _____
RED-IN YELLOW-OUT
AS INSTALLED
DATE _____
BY _____

8' X 10' BUNGALOW

PROPOSED D	M	Y	REVISIONS	D	C	COMPLETED D	M	Y	C
10	25	10	PED GATES CIRCUIT REV	NAD	BJW				

REGION SOUTHERN
SUB. MATTESON 334

SIGNALS AND COMMUNICATIONS HOMEWOOD
DES. MKN
23 JULY 2010
CH. DTB

GATE MECHANISM CONTROL CIRCUITS
SAFETRAN MODEL S60
MAIN STREET
MATTESON, IL

MTS-021. 61-20

SAFETRAN SYSTEM CORP.
LOUISVILLE DIVISION, LOUISVILLE, KY

SAFETRAN SYSTEMS CORPORATION			
DES. : MKN	DATE: 23/07/10	JOB NO. : PICA10249	
CKD. : DTB	ISSUE DATE: N/A	EST. NO. : N/A	
DRN. : APL	PLAN NO. : N/A	SHEET 20 OF 26	
P TIME: 15:56	P DATE: 25-OCT-2010	CAD ID. : MTS-021. 61-20	

mts-021. 61-20. dgn
25-OCT-2010

$WATERMARK

REVISIONS				
NO.	DATE	BY	DESCRIPTION	APP. BY
1	25/10/10	NAD	PED GATES CIRCUIT REV	BJW
2				
3				
4				
5				

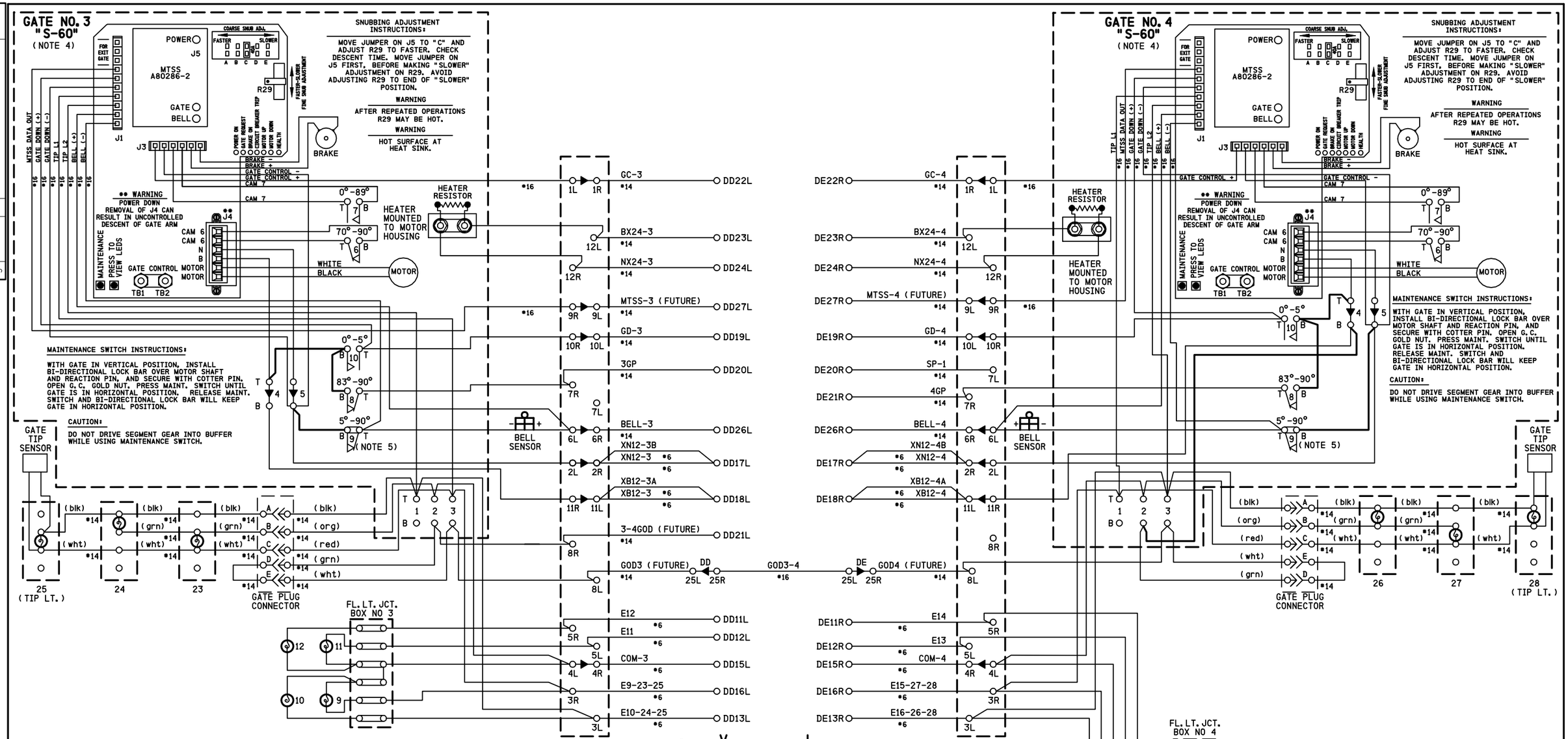

NOTES:

1) ON GATE No. 3 ADD JUMPER BETWEEN TERMINALS:
   ADD JUMPER BETWEEN TERMINAL 4T & 10B,
   ADD JUMPER BETWEEN TERMINAL 10B & 8B,
   AND ADD JUMPER BETWEEN TERMINAL 5B & 9B.
2) ON GATE No. 4 ADD JUMPER BETWEEN TERMINALS:
   ADD JUMPER BETWEEN TERMINAL 4T &10B,
   ADD JUMPER BETWEEN TERMINAL 10B & 8B,
   ADD JUMPER BETWEEN TERMINAL 5B & 9B,
   AND ADD JUMPER BETWEEN TERMINAL 4B & 2B.
3) ALL WIRING #10 AWG MINIMUM UNLESS OTHERWISE NOTED. WIRE SIZES SHOWN ARE MINIMUM GAUGE.
4) GATE DESCENT TIME (RELEASE FROM VERTICAL TO FULLY HORIZONTAL) TO BE WITHIN 11 SECONDS.
5) BELL CUT-OUT (5°-90°) WHEN REQUIRED REMOVE STRAP BETWEEN 9B AND 9T.
6) ENSURE ALL TERMINALS HAVE TWO SHOULDER NUTS.

PROPOSED
DES. No. _____
GREEN-IN ORANGE-OUT
AS INSTALLED
DATE _____
BY _____

PROPOSED
DES. No. _____
RED-IN YELLOW-OUT
AS INSTALLED
DATE _____
BY _____

8' X 10' BUNGALOW

PROPOSED D	M	Y	REVISIONS	D	C	COMPLETED D	M	Y	C
10	25	10	PED GATES CIRCUIT REV	NAD	BJW				

REGION SOUTHERN
SUB. MATTESON 334

SIGNALS AND COMMUNICATIONS HOMEWOOD
DES. MKN
23 JULY 2010
CH. DTB

GATE MECHANISM CONTROL CIRCUITS
SAFETRAN MODEL S60
MAIN STREET
MATTESON, IL

MTS-021. 61-21

SAFETRAN SYSTEM CORP.
LOUISVILLE DIVISION, LOUISVILLE, KY

SAFETRAN SYSTEMS CORPORATION			
DES. : MKN	DATE: 23/07/10	JOB NO. : PICA10249	
CKD. : DTB	ISSUE DATE: N/A	EST. NO. : N/A	
DRN. : APL	PLAN NO. : N/A	SHEET 21 OF 26	
P TIME: 15:56	P DATE: 25-OCT-2010	CAD ID. : MTS-021. 61-21	

mts-021. 61-21. dgn
25-OCT-2010

$WATERMARK

REVISIONS				
NO.	DATE	BY	DESCRIPTION	APP. BY
1	25/10/10	NAD	PED GATES CIRCUIT REV	BJW
2				
3				
4				
5				

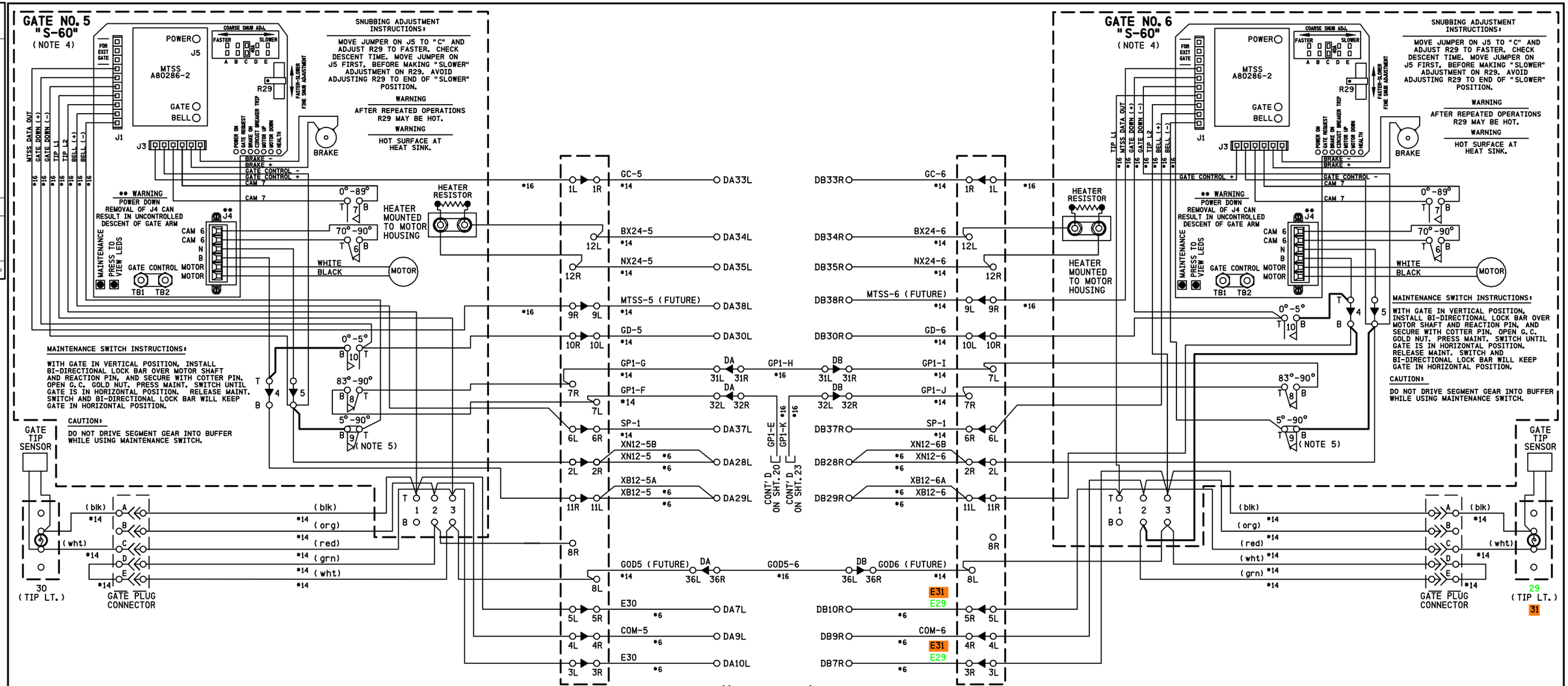

SAFETRAN SYSTEMS CORPORATION			
DES.: MKN	DATE: 23/07/10	JOB NO.: PICA10249	
CKD.: DTB	ISSUE DATE: N/A	EST. NO.: N/A	
DRN.: APL	PLAN NO.: N/A	SHEET 22 OF 26	
P TIME: 15:56	P DATE: 25-OCT-2010	CAD ID.: MTS-021.61-22	

NOTES:

1) ON GATE No. 1 ADD JUMPER BETWEEN TERMINALS: ADD JUMPER BETWEEN TERMINAL 4T & 10B, AND ADD JUMPER BETWEEN TERMINAL 5B & 9B.
2) ON GATE No. 2 ADD JUMPER BETWEEN TERMINALS: ADD JUMPER BETWEEN TERMINAL 4T &10B, ADD JUMPER BETWEEN TERMINAL 5B & 9B, AND ADD JUMPER BETWEEN TERMINAL 4B & 2B.
3) ALL WIRING #10 AWG MINIMUM UNLESS OTHERWISE NOTED. WIRE SIZES SHOWN ARE MINIMUM GAUGE.
4) GATE DESCENT TIME (RELEASE FROM VERTICAL TO FULLY HORIZONTAL) TO BE WITHIN 11 SECONDS.
5) BELL CUT-OUT (5°-90°) WHEN REQUIRED REMOVE STRAP BETWEEN 9B AND 9T.
6) ENSURE ALL TERMINALS HAVE TWO SHOULDER NUTS.

PROPOSED
DES. No. _____
GREEN-IN ORANGE-OUT
AS INSTALLED
DATE _____
BY _____

PROPOSED
DES. No. _____
RED-IN YELLOW-OUT
AS INSTALLED
DATE _____
BY _____

8' X 10' BUNGALOW

PROPOSED D	PROPOSED M	PROPOSED Y	REVISIONS	D	C	COMPLETED D	COMPLETED M	COMPLETED Y	C
10	25	10	PED GATES CIRCUIT REV	NAD	BJW				

REGION SOUTHERN
SUB. MATTESON 334

SIGNALS AND COMMUNICATIONS HOMEWOOD
23 JULY 2010
DES. MKN
CH. DTB

GATE MECHANISM CONTROL CIRCUITS
SAFETRAN MODEL S60
MAIN STREET
MATTESON, IL

MTS-021.61-22

SAFETRAN SYSTEM CORP.
LOUISVILLE DIVISION, LOUISVILLE, KY

mts-021.61-22.dgn
25-OCT-2010

$WATERMARK

REVISIONS			
NO.	DATE	BY	APP. BY
1			
2			
3			
4			
5			

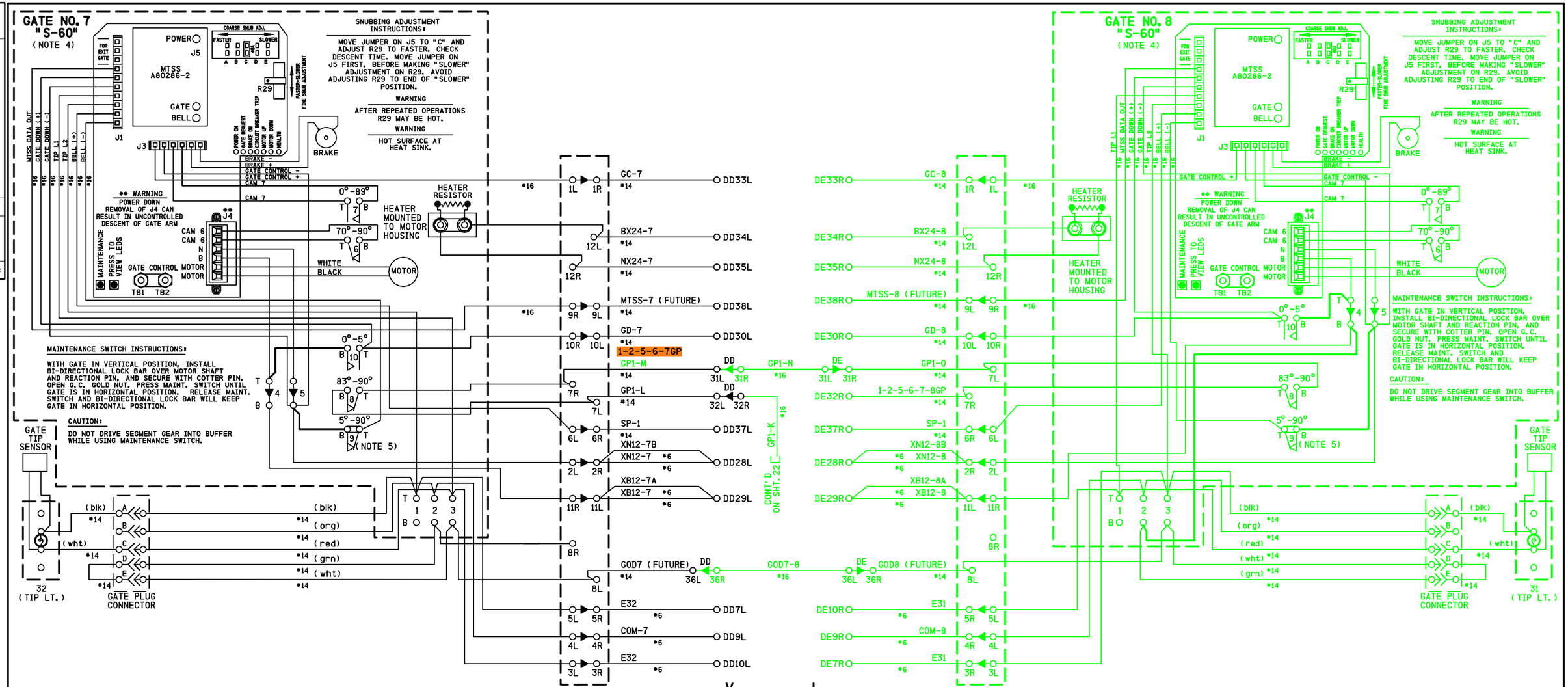

NOTES:

1) ON GATE No. 1 ADD JUMPER BETWEEN TERMINALS: ADD JUMPER BETWEEN TERMINAL 4T & 10B, AND ADD JUMPER BETWEEN TERMINAL 5B & 9B.
2) ON GATE No. 2 ADD JUMPER BETWEEN TERMINALS: ADD JUMPER BETWEEN TERMINAL 4T &10B, ADD JUMPER BETWEEN TERMINAL 5B & 9B, AND ADD JUMPER BETWEEN TERMINAL 4B & 2B.
3) ALL WIRING #10 AWG MINIMUM UNLESS OTHERWISE NOTED. WIRE SIZES SHOWN ARE MINIMUM GAUGE.
4) GATE DESCENT TIME (RELEASE FROM VERTICAL TO FULLY HORIZONTAL) TO BE WITHIN 11 SECONDS.
5) BELL CUT-OUT (5°-90°) WHEN REQUIRED REMOVE STRAP BETWEEN 9B AND 9T.
6) ENSURE ALL TERMINALS HAVE TWO SHOULDER NUTS.

PROPOSED
DES. No. _____
GREEN-IN ORANGE-OUT
AS INSTALLED
DATE _____
BY _____

PROPOSED
DES. No. _____
RED-IN YELLOW-OUT
AS INSTALLED
DATE _____
BY _____

8' X 10' BUNGALOW

PROPOSED D	M	Y	REVISIONS	D	C	COMPLETED D	M	Y	C

REGION SOUTHERN
SUB. MATTESON 334

SIGNALS AND COMMUNICATIONS HOMEWOOD
23 JULY 2010
DES. MKN
CH. DTB

GATE MECHANISM CONTROL CIRCUITS
SAFETRAN MODEL S60
MAIN STREET
MATTESON, IL

MTS-021.61-23

SAFETRAN SYSTEM CORP.
LOUISVILLE DIVISION, LOUISVILLE, KY

SAFETRAN SYSTEMS CORPORATION			
DES.: MKN	DATE: 23/07/10	JOB NO.: PICA10249	
CKD.: DTB	ISSUE DATE: N/A	EST. NO.: N/A	
DRN.: APL	PLAN NO.: N/A	SHEET 23 OF 26	
P TIME: 15:57	P DATE: 25-OCT-2010	CAD ID.: MTS-021.61-23	

mts-021.61-23.dgn
25-OCT-2010

$WATERMARK

REVISIONS				
NO.	DATE	BY	DESCRIPTION	APP. BY
1	25/10/10	NAD	PED GATES CIRCUIT REV	BJW
2				
3				
4				
5				

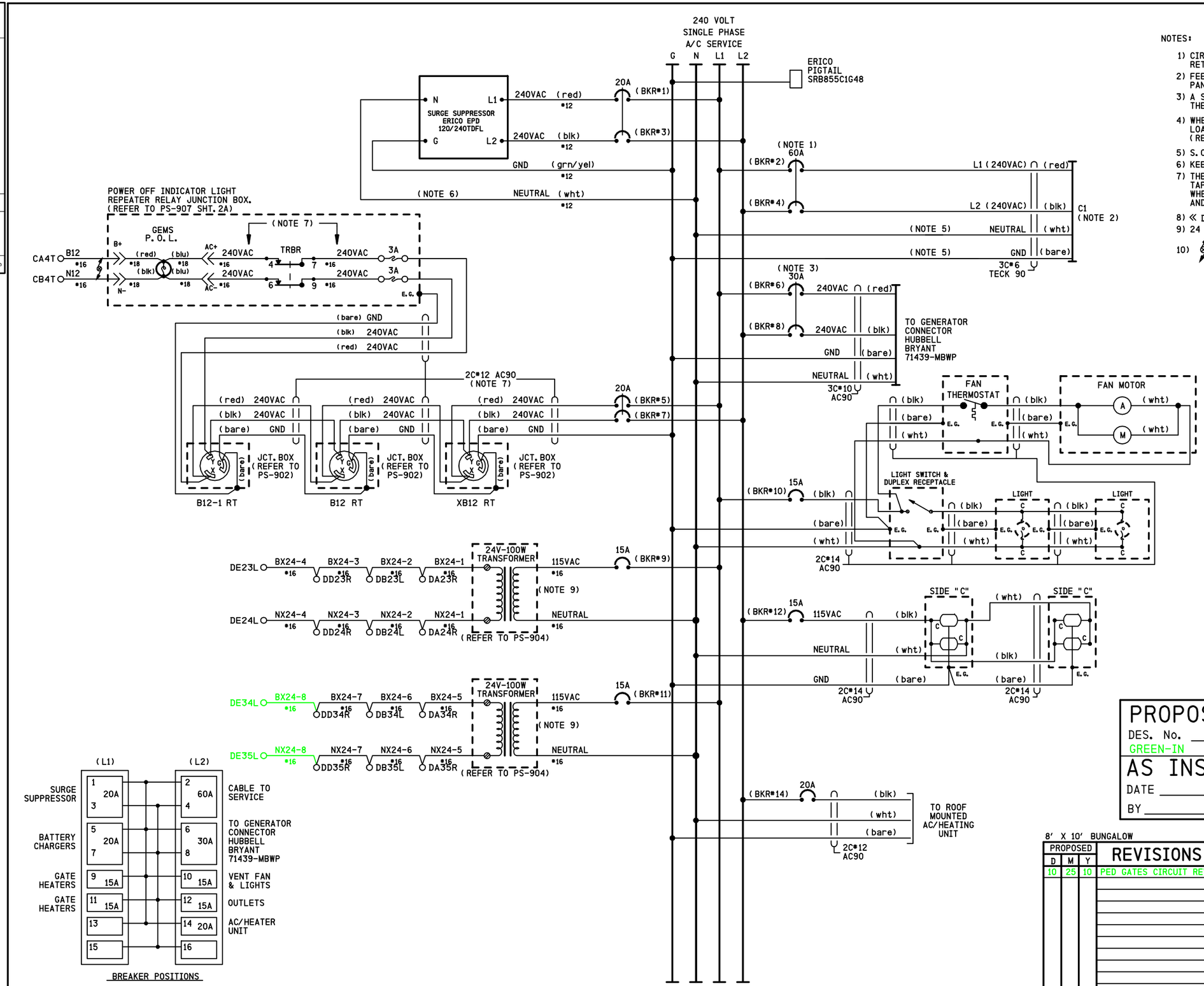

NOTES:

1) CIRCUIT BREAKER NOT TO EXCEED 60 AMPERES. RETAINING KIT PK4MB2LA MUST BE USED WITH 60A BREAKER.
2) FEEDER CIRCUIT BREAKER, AT STUB POLE SERVICE PANEL, NOT TO EXCEED 60 AMPERES.
3) A SWITCH TRANSFER KIT MUST BE INSTALLED BETWEEN THE SERVICE DISCONNECT BREAKER AND THE GENERATOR HOOK UP.
4) WHERE SEPARATE GROUND WIRE EXISTS BETWEEN THE SERVICE AND THE LOAD CENTER, REMOVE THE BRASS COLORED BONDING SCREW. (REFER TO SCHEMATIC ON BOX COVER FOR EXACT LOCATION)
5) S.C.#6 STRANDED, CSA TYPE R90 (X-LINK)
6) KEEP LEADS AS SHORT AS POSSIBLE
7) THE WHITE CONDUCTOR MUST BE MADE PERMANENTLY UNIDENTIFIABLE BY TAPING THIS CONDUCTOR RED. TAPING MUST BE CONTINUOUS WHERE THE SEPARATE CONDUCTORS HAVE BEEN MADE ACCESSIBLE AND VISIBLE.
8) « DENOTES WAGO TERMINAL
9) 24 VOLT - 40 WATT TRANSFORMER (CN STOCK #02-45-367)
10) DENOTES TWISTED PAIR.

mts-021.61-24.dgn
25-OCT-2010

PROPOSED
DES. No. _____
GREEN-IN ORANGE-OUT
AS INSTALLED
DATE _____
BY _____

PROPOSED
DES. No. _____
RED-IN YELLOW-OUT
AS INSTALLED
DATE _____
BY _____

8' X 10' BUNGALOW

PROPOSED D	PROPOSED M	PROPOSED Y	REVISIONS	D	C	COMPLETED D	COMPLETED M	COMPLETED Y	C
10	25	10	PED GATES CIRCUIT REV	NAD	BJW				

REGION SOUTHERN
SUB. MATTESON 334

SIGNALS AND COMMUNICATIONS
HOMEWOOD
23 JULY 2010
DES. MKN
CH. DTB

POWER DISTRIBUTION
AC
MAIN STREET
MATTESON, IL

MTS-021.61-24

SAFETRAN SYSTEM CORP.
LOUISVILLE DIVISION, LOUISVILLE, KY

SAFETRAN SYSTEMS CORPORATION

DES.: MKN	DATE: 23/07/10	JOB NO.: PICAI0249	
CKD.: DTB	ISSUE DATE: N/A	EST. NO.: N/A	
DRN.: APL	PLAN NO.: N/A	SHEET 24 OF 26	
P TIME: 15:57	P DATE: 25-OCT-2010	CAD ID.: MTS-021.61-24	

$WATERMARK

REVISIONS				
NO.	DATE	BY	DESCRIPTION	APP. BY
1	25/10/10	NAD	PED GATES CIRCUIT REV	BJW
2				
3				
4				
5				

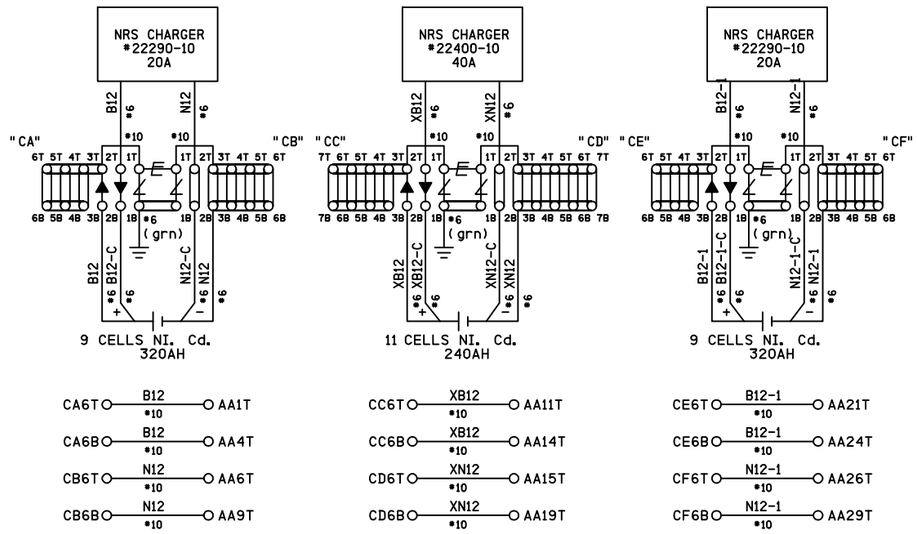

CA6T — B12 *10 — AA1T
CA6B — B12 *10 — AA4T
CB6T — N12 *10 — AA6T
CB6B — N12 *10 — AA9T

CC6T — XB12 *10 — AA11T
CC6B — XB12 *10 — AA14T
CD6T — XN12 *10 — AA15T
CD6B — XN12 *10 — AA19T

CE6T — B12-1 *10 — AA21T
CE6B — B12-1 *10 — AA24T
CF6T — N12-1 *10 — AA26T
CF6B — N12-1 *10 — AA29T

XB12 ENERGY LOOP

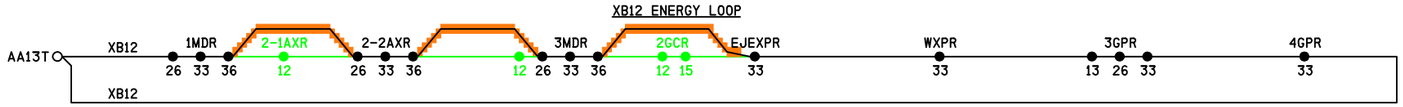

XN12 ENERGY LOOP

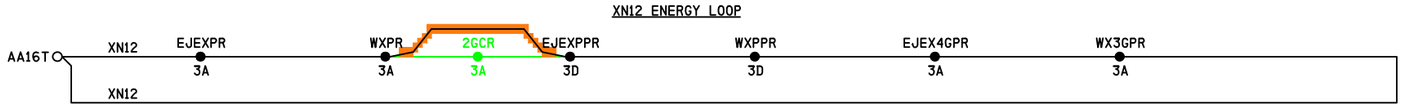

PROPOSED
DES. No. _____
GREEN-IN ORANGE-OUT
AS INSTALLED
DATE _____
BY _____

PROPOSED
DES. No. _____
RED-IN YELLOW-OUT
AS INSTALLED
DATE _____
BY _____

8' X 10' BUNGALOW

PROPOSED D	PROPOSED M	PROPOSED Y	REVISIONS	D	C	COMPLETED D	COMPLETED M	COMPLETED Y	C
10	25	10	PED GATES CIRCUIT REV	NAD	BJW				

REGION SOUTHERN
SUB. MATTESON 334

SIGNALS AND COMMUNICATIONS HOMEWOOD
23 JULY 2010
DES. MKN
CH. DTB

POWER DISTRIBUTION
DC & ENERGY LOOPS
MAIN STREET
MATTESON, IL

MTS-021.61-25

SAFETRAN SYSTEM CORP.
LOUISVILLE DIVISION, LOUISVILLE, KY

SAFETRAN SYSTEMS CORPORATION

DES. : MKN	DATE: 23/07/10	JOB NO. : PICA10249	
CKD. : DTB	ISSUE DATE: N/A	EST. NO. :N/A	
DRN. : APL	PLAN NO. :N/A	SHEET 25 OF 26	
P TIME:15:57	P DATE: 25-OCT-2010	CAD ID. : MTS-021.61-25	

mts-021.61-25.dgn
25-OCT-2010

$WATERMARK

REVISIONS				
NO.	DATE	BY	DESCRIPTION	APP. BY
1	25/10/10	NAD	PED GATES CIRCUIT REV	BJW
2				
3				
4				
5				

DOT: 260 636B	MATTESON MP 21.61			
EQUIPMENT	SIG. No.			
	No. 1	No. 2	No. 3	No. 4
FLS	-	-	-	-
GATE (MODEL)	SAFETRAN S-60	SAFETRAN S-60	SAFETRAN S-60	SAFETRAN S-60
OFFSET GATE (FT')	18	18	18	18
WTF COMBO - CANTILEVER (FT')	-	-	-	-
ADDITIONAL LIGHTS	-	-	-	-
BELL	X	X	X	X
X BUCKS	X	X	X	X
MULTIPLE TRACK SIGNS	X	X	X	X
EQUIPMENT	SIG. No.			
	No. 5	No. 6	No. 7	No. 8
FLS	-	-	-	
GATE (MODEL)	SAFETRAN S-60	SAFETRAN S-60	SAFETRAN S-60	SAFETRAN S-60
OFFSET GATE (FT')	9	9	9	9
WTF COMBO - CANTILEVER (FT')	-	-	-	-
ADDITIONAL LIGHTS	-	-	-	-
BELL	-	-	-	-
X BUCKS	X	X	X	X
MULTIPLE TRACK SIGNS	X	X	X	X

HOUSE CABLE ASSIGNMENTS

DEVICE	CABLE(S)
SIGNAL #1	16C(7#6,9#14), 3C#6
SIGNAL #2	16C(7#6,9#14), 3C#6
SIGNAL #3	16C(7#6,9#14), 3C#6
SIGNAL #4	16C(7#6,9#14), 3C#6
SIGNAL #5	16C(7#6,9#14)
SIGNAL #6	16C(7#6,9#14)
SIGNAL #7	16C(7#6,9#14)
SIGNAL #8	16C(7#6,9#14)
HXP-3R2 UNIT#1	(5)-2C #6 TW
HXP-3R2 UNIT#2	(5)-2C #6 TW
HXP-3R2 UNIT#3	(5)-2C #6 TW
HXP-3R2 UNIT#4	(6)-2C #6 TW
REMOTE BUNGALOW MP.21.65	8C(2#10,6#14)
AC POWER	3C #6

GUIDELINES FOR CROSSING WARNING TIME AND APPROACH DISTANCE CALCULATIONS LOOP

MAX SPEED IN MPH	15
CT IN SECONDS	10
BUFFER TIME IN SECONDS	5
TOTAL WARNING TIME IN SECONDS	40
ERT IN SECONDS	5
APT IN SECONDS	0
TOTAL APPROACH TIME IN SECONDS	45
APPROACH DISTANCE IN FEET	1000
SPEED IN FPS	22
CLEARANCE TIME CALCULATION	
LONGEST DISTANCE IN FEET (35 FEET MINIMUM)	100
CT IN SECONDS	10

APT - ADVANCED PRE-EMPTION
ERT - EQUIPMENT RESPONSE TIME
CT - CLEARANCE TIME

GUIDELINES FOR CROSSING WARNING TIME AND APPROACH DISTANCE CALCULATIONS EJ&E

MAX SPEED IN MPH	45
CT IN SECONDS	10
BUFFER TIME IN SECONDS	5
TOTAL WARNING TIME IN SECONDS	40
ERT IN SECONDS	5
APT IN SECONDS	0
TOTAL APPROACH TIME IN SECONDS	45
APPROACH DISTANCE IN FEET	2900
SPEED IN FPS	66
CLEARANCE TIME CALCULATION	
LONGEST DISTANCE IN FEET (35 FEET MINIMUM)	100
CT IN SECONDS	10

APT - ADVANCED PRE-EMPTION
ERT - EQUIPMENT RESPONSE TIME
CT - CLEARANCE TIME

GUIDELINES FOR CROSSING WARNING TIME AND APPROACH DISTANCE CALCULATIONS SE WYE

MAX SPEED IN MPH	25
CT IN SECONDS	15
BUFFER TIME IN SECONDS	5
TOTAL WARNING TIME IN SECONDS	45
ERT IN SECONDS	5
APT IN SECONDS	0
TOTAL APPROACH TIME IN SECONDS	50
APPROACH DISTANCE IN FEET	1840
SPEED IN FPS	36.6
CLEARANCE TIME CALCULATION	
LONGEST DISTANCE IN FEET (35 FEET MINIMUM)	150
CT IN SECONDS	15

APT - ADVANCED PRE-EMPTION
ERT - EQUIPMENT RESPONSE TIME
CT - CLEARANCE TIME

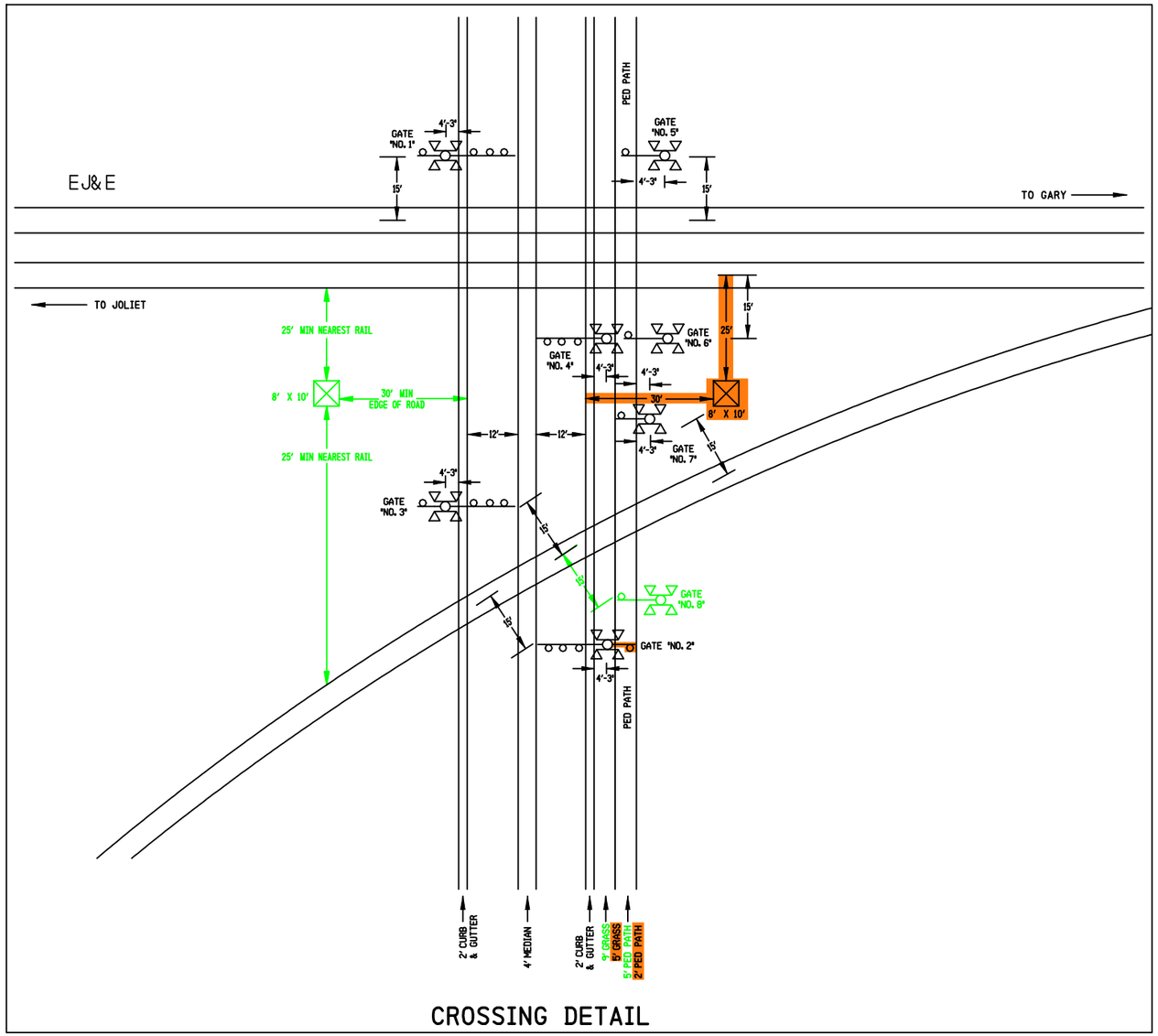

CROSSING DETAIL

PROPOSED
DES. No. _____
GREEN-IN ORANGE-OUT
AS INSTALLED
DATE _____
BY _____

PROPOSED
DES. No. _____
RED-IN YELLOW-OUT
AS INSTALLED
DATE _____
BY _____

8' X 10' BUNGALOW

PROPOSED D	PROPOSED M	PROPOSED Y	REVISIONS	D	C	COMPLETED D	COMPLETED M	COMPLETED Y	C
10	25	10	PED GATES CIRCUIT REV	NAD	BJW				

REGION SOUTHERN
SUB. MATTESON 334
SIGNALS AND COMMUNICATIONS HOMEWOOD
23 JULY 2010
DES. MKN
CH. DTB
CROSSING DETAIL AND CALCULATIONS MAIN STREET
MATTESON, IL
MTS-021.61-26

SAFETRAN SYSTEMS CORPORATION
DES.: MKN | DATE: 23/07/10 | JOB NO.: PICA10249
CKD.: DTB | ISSUE DATE: N/A | EST. NO.:
DRN.: APL | PLAN NO.: N/A | SHEET 26 OF 26
P TIME: 15:57 | P DATE: 25-OCT-2010 | CAD ID.: MTS-021.61-26

mts-021.61-26.dgn
25-OCT-2010

SAFETRAN SYSTEM CORP.
LOUISVILLE DIVISION, LOUISVILLE, KY