$WATERMARK

| REVISIONS NO. | DATE | BY | DESCRIPTION | APP. BY |
|---|---|---|---|---|
| 1 | | | | |
| 2 | | | | |
| 3 | | | | |
| 4 | | | | |
| 5 | | | | |

UNIT #1 — Grade Crossing Location Record

Cabinet Number (Option 90): XXXX

Location: Main Street  Milepost: 21.61  DOT: 260 636b  Date: XX / XX / 10

Operating Program  HPN: _____  Version: XXXXX

System Monitor Program  HPN: _____  Version: XXXXX

Hardware Settings

Track 1  Master [X]  Slave [ ]  4 kHz [ ]  8 kHz [X]
LOS Jumper 0 [ ] 1 [X] 2 [ ]  Fault Jumper 0 [X] 1 [ ]
Approach configuration switch position:  Normal [X]  Short [ ]  Very Short [ ]

Track 2  Master [ ]  Slave [X]  4 kHz [ ]  8 kHz [ ]
LOS Jumper 0 [ ] 1 [ ] 2 [ ]  Fault Jumper 0 [ ] 1 [ ]
Approach configuration switch position:  Normal [X]  Short [ ]  Very Short [ ]

Adjust Select Adjustments

| No. | Adjustment | Default | Range | Track 1 | Track 2 |
|---|---|---|---|---|---|
| 1 | Approach Length | 9,999 | 0 - 9,999 | 2900 feet | 2540 feet |
| 2 | Warning Time | 99 | 23 - 99 | 40 seconds | 40 seconds |
| 3 | LIA | 0 | -9 to +9 | XX steps | XX steps |
| 4 | TC (1 step = 32) | 395 | 430 - 470 | XX steps | XX steps |
| 5 | MD Restart | 99% | 0 - 99% | XX RX | XX RX |

Option Adjustments

| No. | Adjustment | Default | Range | Track 1 | Track 2 |
|---|---|---|---|---|---|
| 0 | RX | 0 | 1-100 | | |
| 1 | TK-ENA | UP | UP or dn | UP [X] dn [ ] | UP [X] dn [ ] |
| 2 | TK FO | 0 | 0 - 9999 | 156 Hz | 156 Hz |
| 3 | CW/MD | d | C to d | C [X] d [ ] | C [X] d [ ] |
| 4 | UNI-BI | b | U - b | U [ ] b [X] | U [X] b [ ] |
| 5 | NBS-C | 0 | 0 - 99 | 99 RX | 99 RX |
| | | 9,999 | RX dependant | XXXX feet | XXXX feet |
| 6 | CWEWT | 80 | 0 - 99 | 80 seconds | 80 seconds |
| 7 | LOS | 16 | 4 - 99 | 30 seconds | 30 seconds |
| 8 | IJ-LOS | 5 | 3 - 99 | 5 seconds | 5 seconds |
| 9 | BC | frequency dependant | 50 -250 | XXX | XXX |
| 10 | P-COMP | 0 | 0 - 10 | XX degrees | XX degrees |

HXP-3, HXP-3R, HXP-3R2

AX Adjustment Options  NOTE: NO AX DRIVE IS USED AT THIS LOCATION

| | Default | Range | Option 11 - AX1 | Option 12 - AX2 | Option 13 - AX3 |
|---|---|---|---|---|---|
| TK-ASN | | 1, 2, Both | 1 [ ] 2 [ ] Both [ ] | 1 [ ] 2 [ ] Both [ ] | 1 [ ] 2 [ ] Both [ ] |
| OF-TK1 | 0 | 0 - 9,999 | feet | feet | feet |
| OF-TK2 | 0 | 0 - 9,999 | feet | feet | feet |
| WT | 99 | 23 - 99 | seconds | seconds | seconds |
| MD-RST | 99 | 0 - 99% | RX | RX | RX |
| CW/MD | d | C or d | C [ ] d [ ] | C [ ] d [ ] | C [ ] d [ ] |
| CJ-LOS | 0 | 3 - 99 | seconds | seconds | seconds |
| PJ-DET | 15 | 4 - 15 | seconds | seconds | seconds |
| POS-ST | dn | UP or dn | UP [ ] dn [ ] | UP [ ] dn [ ] | UP [ ] dn [ ] |

| No. | Adjustment | Default | Range | Track 1 | Track 2 |
|---|---|---|---|---|---|
| 17 | MDR-AX | n* | n or A | n [X] A [ ] | n [ ] A [ ] |
| | OF-TK1 | 0 | 0 - 9,999 | 0 feet | |
| | OF-TK2 | 0 | 0 - 9,999 | | 360 feet |
| | CJ-LOS | 0 | 3 - 99 | seconds | seconds |
| | PJ-DET | 15 | 4 - 15 | seconds | seconds |
| 18 | MD-TMR | 10 | 10-99 (0=disable) | minutes | minutes |
| 19 | MIN-WT | 0 | 23-99 (0=disable) | seconds | seconds |
| 20 | FS-DET | 0 | 10-30 (0=disable) | minutes | minutes |
| 21 | POS-RX | 0 | 0 - 74 (0=disable) | RX | RX |
| | POS-TM | 0 | 0 - 99** | minutes | minutes |
| 22 | AR-TMR | 0 | 0-80 (0=disable) | minutes | minutes |
| 47 | ATO-RX | dn | UP or dn | UP [ ] dn [X] | UP [ ] dn [X] |
| 48 | PF-ENA | UP | UP or dn | UP [X] dn [ ] | UP [X] dn [ ] |

***n = not an AX drive (no options available)**
****0 = disable, 99 = continuous**

Shunt Record

| West Approach | | No Shunt RX | No Shunt Phase | 100% Shunt RX | 100% Shunt Phase | 50% Shunt | 50% Shunt RX | 50% Shunt Phase | LIA Added 1/16 1 to 9 |
|---|---|---|---|---|---|---|---|---|---|
| Track 1 | Normal | | | | | | | | |
| | Standby | | | | | | | | |
| Track 2 | Normal | | | | | | | | |
| | Standby | | | | | | | | |
| East Approach | | | | | | | | | |
| Track 1 | Normal | | | | | | | | |
| | Standby | | | | | | | | |
| Track 2 | Normal | | | | | | | | |
| | Standby | | | | | | | | |

PROPOSED
DES. No. _____
RED-IN  YELLOW-OUT
AS INSTALLED
DATE _____
BY _____

8' X 10' BUNGALOW

| PROPOSED D | M | Y | REVISIONS | D | C | COMPLETED D | M | Y | C |
|---|---|---|---|---|---|---|---|---|---|
| | | | | | | | | | |

REGION SOUTHERN
SUB. MATTESON 334
SIGNALS AND COMMUNICATIONS HOMEWOOD
23 JULY 2010
DES. MKN
CH. DTB
HXP-3R2 UNIT#1
PROGRAM CONFIGURATION
MAIN STREET
MATTESON, IL
MTS-021.61-07

SAFETRAN SYSTEM CORP.
LOUISVILLE DIVISION, LOUISVILLE, KY

SAFETRAN SYSTEMS CORPORATION
DES.: MKN  DATE: 23/07/10  JOB NO.: PICA10249
CKD.: DTB  ISSUE DATE: N/A  EST. NO.: N/A
DRN.: APL  PLAN NO.: N/A  SHEET 7 OF 26
P TIME: 15:55  P DATE: 25-OCT-2010  CAD ID.: MTS-021.61-07

mts-021.61-07.dgn
25-OCT-2010

$WATERMARK

| REVISIONS | | | | |
|---|---|---|---|---|
| NO. | DATE | BY | DESCRIPTION | APP. BY |
| 1 | | | | |
| 2 | | | | |
| 3 | | | | |
| 4 | | | | |
| 5 | | | | |

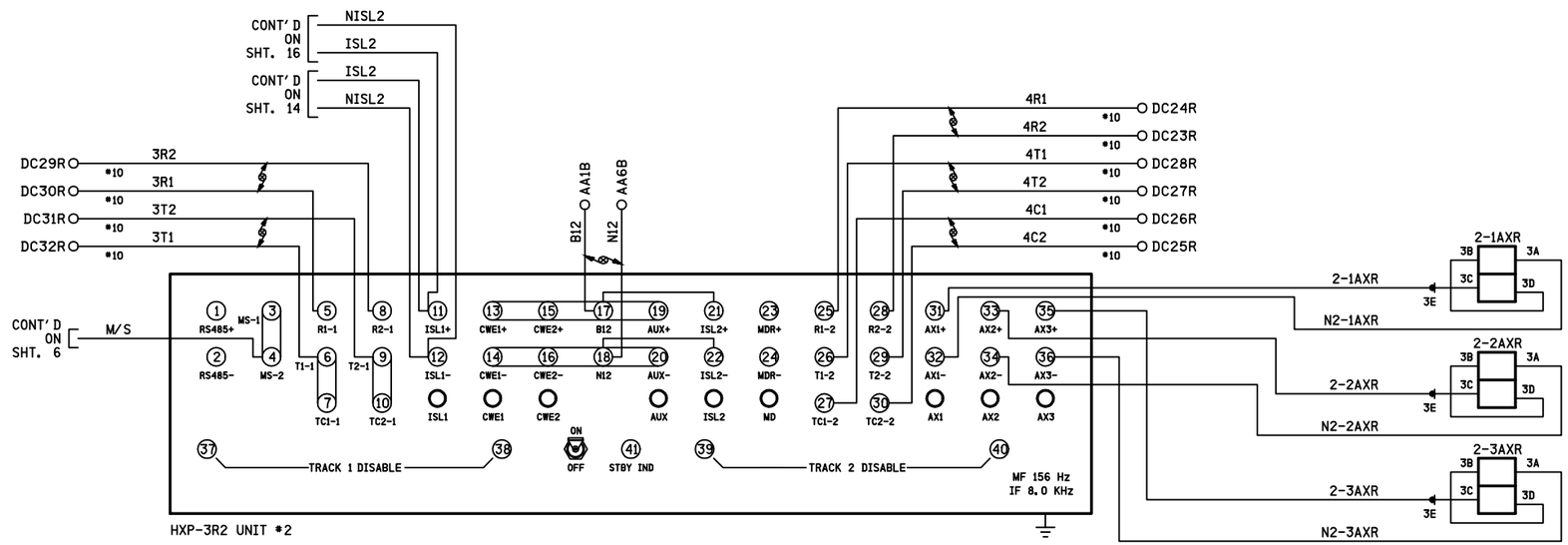


NOTES:

1) ALL WIRING #16 AWG UNLESS OTHERWISE NOTED.

2) DENOTES TWISTED PAIR.

| SAFETRAN SYSTEMS CORPORATION | | | |
|---|---|---|---|
| DES. : MKN | DATE: 23/07/10 | JOB NO.: PICA10249 | |
| CKD. : DTB | ISSUE DATE: N/A | EST. NO. :N/A | |
| DRN. : APL | PLAN NO. :N/A | SHEET 8 OF 26 | |
| P TIME:15:56 | P DATE: 25-OCT-2010 | CAD ID.: MTS-021.61-08 | |

PROPOSED
DES. No. _____
RED-IN YELLOW-OUT
AS INSTALLED
DATE _____
BY _____

8' X 10' BUNGALOW

| PROPOSED D | PROPOSED M | PROPOSED Y | REVISIONS | D | C | COMPLETED D | COMPLETED M | COMPLETED Y | C |
|---|---|---|---|---|---|---|---|---|---|
| | | | | | | | | | |

REGION SOUTHERN
SUB. MATTESON 334

SIGNALS AND COMMUNICATIONS HOMEWOOD
23 JULY 2010
DES. MKN
CH. DTB

HXP-3R2 UNIT#2
TRACKS 3 & 4 CONNECTIONS
MAIN STREET
MATTESON, IL

MTS-021.61-08

SAFETRAN SYSTEM CORP.
LOUISVILLE DIVISION, LOUISVILLE, KY

mts-021.61-08.dgn
25-OCT-2010

$WATERMARK

| REVISIONS NO. | DATE | BY | DESCRIPTION | APP. BY |
|---|---|---|---|---|
| 1 | | | | |
| 2 | | | | |
| 3 | | | | |
| 4 | | | | |
| 5 | | | | |

UNIT #2 — Grade Crossing Location Record

Cabinet Number (Option 90): XXXX

Location: Main Street  Milepost: 21.61  DOT: 260 636b  Date: XX / XX / 10

Operating Program  HPN: _____  Version: XXXXX

System Monitor Program  HPN: _____  Version: XXXXX

Hardware Settings

Track 1  Master [ ]  Slave [X]  4 kHz [ ]  8 kHz [X]
LOS Jumper 0 [ ] 1 [X] 2 [ ]  Fault Jumper 0 [X] 1 [ ]
Approach configuration switch position:  Normal [X]  Short [ ]  Very Short [ ]

Track 2  Master [ ]  Slave [X]  4 kHz [ ]  8 kHz [ ]
LOS Jumper 0 [ ] 1 [ ] 2 [ ]  Fault Jumper 0 [ ] 1 [ ]
Approach configuration switch position:  Normal [X]  Short [ ]  Very Short [ ]

Adjust Select Adjustments

| No. | Adjustment | Default | Range | Track 1 | Track 2 |
|---|---|---|---|---|---|
| 1 | Approach Length | 9,999 | 0 - 9,999 | 2900 feet | 2540 feet |
| 2 | Warning Time | 99 | 23 - 99 | 40 seconds | 40 seconds |
| 3 | LIA | 0 | -9 to +9 | XX steps | XX steps |
| 4 | TC (1 step = 32) | 395 | 430 - 470 | XX steps | XX steps |
| 5 | MD Restart | 99% | 0 - 99% | XX RX | XX RX |

Option Adjustments

| No. | Adjustment | Default | Range | Track 1 | Track 2 |
|---|---|---|---|---|---|
| 0 | RX | 0 | 1-100 | | |
| 1 | TK-ENA | UP | UP or dn | UP [X] dn [ ] | UP [X] dn [ ] |
| 2 | TK FO | 0 | 0 - 9999 | 156 Hz | 156 Hz |
| 3 | CW/MD | d | C to d | C [X] d [ ] | C [X] d [ ] |
| 4 | UNI-BI | b | U - b | U [ ] b [X] | U [X] b [ ] |
| 5 | NBS-C | 0 | 0 - 99 | 99 RX | 99 RX |
| | | 9,999 | RX dependant | XXXX feet | XXXX feet |
| 6 | CWEWT | 80 | 0 - 99 | 80 seconds | 80 seconds |
| 7 | LOS | 16 | 4 - 99 | 30 seconds | 30 seconds |
| 8 | IJ-LOS | 5 | 3 - 99 | 5 seconds | 5 seconds |
| 9 | BC | frequency dependant | 50 -250 | XXX | XXX |
| 10 | P-COMP | 0 | 0 - 10 | XX degrees | XX degrees |

HXP-3, HXP-3R, HXP-3R2

AX Adjustment Options

| | Default | Range | Option 11 - AX1 | Option 12 - AX2 | Option 13 - AX3 |
|---|---|---|---|---|---|
| TK-ASN | | 1, 2, Both | 1 [X] 2 [ ] Both [ ] | 1 [ ] 2 [X] Both [ ] | 1 [ ] 2 [X] Both [ ] |
| OF-TK1 | 0 | 0 - 9,999 | 0 feet | feet | feet |
| OF-TK2 | 0 | 0 - 9,999 | feet | 360 feet | 360 feet |
| WT | 99 | 23 - 99 | 40 seconds | 40 seconds | 45 seconds |
| MD-RST | 99 | 0 - 99% | RX | RX | RX |
| CW/MD | d | C or d | C [X] d [ ] | C [X] d [ ] | C [X] d [ ] |
| CJ-LOS | 0 | 3 - 99 | seconds | seconds | seconds |
| PJ-DET | 15 | 4 - 15 | 15 seconds | 15 seconds | 15 seconds |
| POS-ST | dn | UP or dn | UP [ ] dn [X] | UP [ ] dn [X] | UP [ ] dn [X] |

| No. | Adjustment | Default | Range | Track 1 | Track 2 |
|---|---|---|---|---|---|
| 17 | MDR-AX | n* | n or A | n [ ] A [ ] | n [ ] A [ ] |
| | OF-TK1 | 0 | 0 - 9,999 | feet | |
| | OF-TK2 | 0 | 0 - 9,999 | | feet |
| | CJ-LOS | 0 | 3 - 99 | seconds | seconds |
| | PJ-DET | 15 | 4 - 15 | seconds | seconds |
| 18 | MD-TMR | 10 | 10-99 (0=disable) | minutes | minutes |
| 19 | MIN-WT | 0 | 23-99 (0=disable) | seconds | seconds |
| 20 | FS-DET | 0 | 10-30 (0=disable) | minutes | minutes |
| 21 | POS-RX | 0 | 0 - 74 (0=disable) | RX | RX |
| | POS-TM | 0 | 0 - 99** | minutes | minutes |
| 22 | AR-TMR | 0 | 0-80 (0=disable) | minutes | minutes |
| 47 | ATO-RX | dn | UP or dn | UP [ ] dn [X] | UP [ ] dn [X] |
| 48 | PF-ENA | UP | UP or dn | UP [X] dn [ ] | UP [X] dn [ ] |

***n = not an AX drive (no options available)**
****0 = disable, 99 = continuous**

Shunt Record

| West Approach | | No Shunt RX | No Shunt Phase | 100% Shunt RX | 100% Shunt Phase | 50% Shunt | 50% Shunt RX | 50% Shunt Phase | LIA Added ¾/¼ 1 to 9 |
|---|---|---|---|---|---|---|---|---|---|
| Track 1 | Normal | | | | | | | | |
| | Standby | | | | | | | | |
| Track 2 | Normal | | | | | | | | |
| | Standby | | | | | | | | |
| East Approach | | | | | | | | | |
| Track 1 | Normal | | | | | | | | |
| | Standby | | | | | | | | |
| Track 2 | Normal | | | | | | | | |
| | Standby | | | | | | | | |

PROPOSED
DES. No. _____
RED-IN  YELLOW-OUT
AS INSTALLED
DATE _____
BY _____

8' X 10' BUNGALOW

| PROPOSED D | M | Y | REVISIONS | D | C | COMPLETED D | M | Y | C |
|---|---|---|---|---|---|---|---|---|---|
| | | | | | | | | | |

REGION SOUTHERN
SUB. MATTESON 334
SIGNALS AND COMMUNICATIONS HOMEWOOD
23 JULY 2010
DES. MKN
CH. DTB
HXP-3R2 UNIT#2
PROGRAM CONFIGURATION
MAIN STREET
MATTESON, IL
MTS-021.61-09

SAFETRAN SYSTEM CORP.
LOUISVILLE DIVISION, LOUISVILLE, KY

SAFETRAN SYSTEMS CORPORATION
DES.: MKN  DATE: 23/07/10  JOB NO.: PICA10249
CKD.: DTB  ISSUE DATE: N/A  EST. NO.: N/A
DRN.: APL  PLAN NO.: N/A  SHEET 9 OF 26
P TIME: 15:56  P DATE: 25-OCT-2010  CAD ID.: MTS-021.61-09

mts-021.61-09.dgn
25-OCT-2010

$WATERMARK

| REVISIONS | | | | |
|---|---|---|---|---|
| NO. | DATE | BY | DESCRIPTION | APP. BY |
| 1 | | | | |
| 2 | | | | |
| 3 | | | | |
| 4 | | | | |
| 5 | | | | |

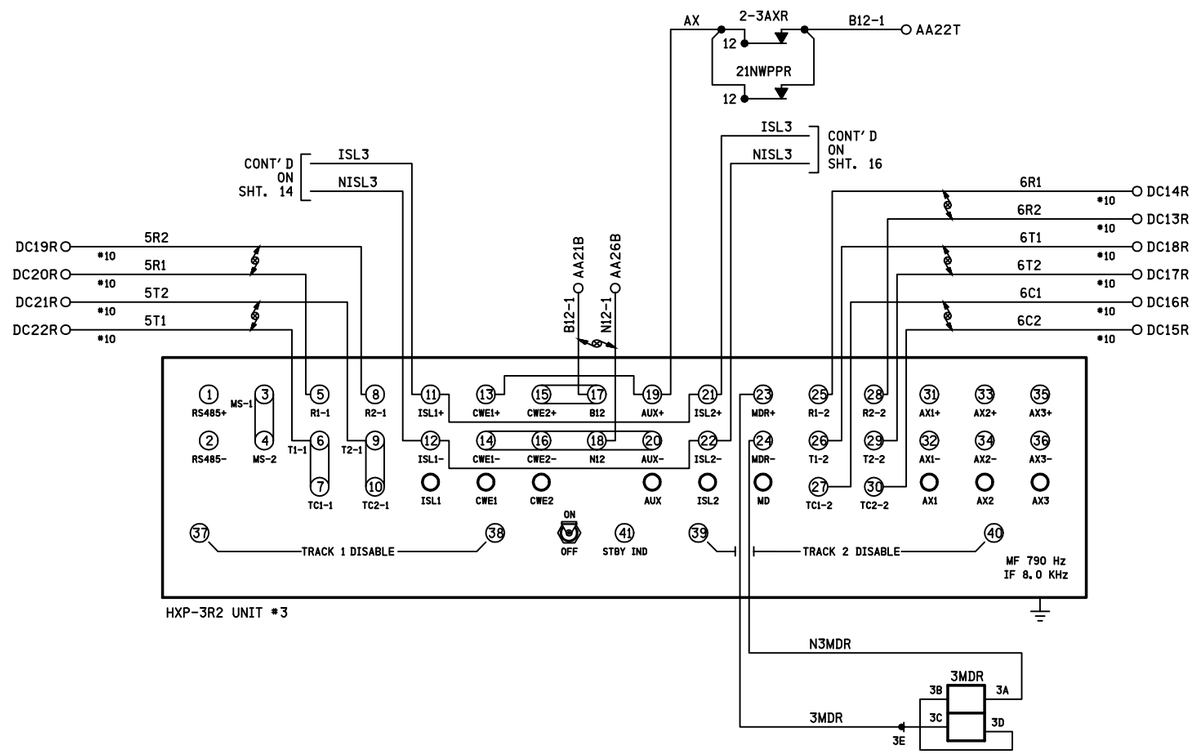


NOTES:

1) ALL WIRING #16 AWG UNLESS OTHERWISE NOTED.

2) DENOTES TWISTED PAIR.

PROPOSED
DES. No. _____
RED-IN YELLOW-OUT

AS INSTALLED
DATE _____
BY _____

8' X 10' BUNGALOW

| PROPOSED D | M | Y | REVISIONS | D | C | COMPLETED D | M | Y | C |
|---|---|---|---|---|---|---|---|---|---|
| | | | | | | | | | |

REGION SOUTHERN
SUB. MATTESON 334

SIGNALS AND COMMUNICATIONS HOMEWOOD
23 JULY 2010
DES. MKN
CH. DTB

HXP-3R2 UNIT#3
TRACKS 5 & 6 CONNECTIONS
MAIN STREET
MATTESON, IL

MTS-021.61-10

SAFETRAN SYSTEM CORP.
LOUISVILLE DIVISION, LOUISVILLE, KY

SAFETRAN SYSTEMS CORPORATION

| | | |
|---|---|---|
| DES.: MKN | DATE: 23/07/10 | JOB NO.: PICA10249 |
| CKD.: DTB | ISSUE DATE: N/A | EST. NO.: N/A |
| DRN.: APL | PLAN NO.: N/A | SHEET 10 OF 26 |
| P TIME: 15:56 | P DATE: 25-OCT-2010 | CAD ID.: MTS-021.61-10 |

mts-021.61-10.dgn
25-OCT-2010

$WATERMARK

| REVISIONS NO. | DATE | BY | DESCRIPTION | APP. BY |
|---|---|---|---|---|
| 1 | | | | |
| 2 | | | | |
| 3 | | | | |
| 4 | | | | |
| 5 | | | | |

UNIT #3 — Grade Crossing Location Record

Cabinet Number (Option 90): XXXX

Location: Main Street  Milepost: 21.61  DOT: 260 636b  Date: XX / XX / 10

Operating Program  HPN _____  Version: XXXXX

System Monitor Program  HPN _____  Version: XXXXX

Hardware Settings

Track 1  Master [X]  Slave [ ]  4 kHz [ ]  8 kHz [X]
LOS Jumper 0 [ ] 1 [X] 2 [ ]  Fault Jumper 0 [X] 1 [ ]
Approach configuration switch position:  Normal [X]  Short [ ]  Very Short [ ]

Track 2  Master [ ]  Slave [X]  4 kHz [ ]  8 kHz [ ]
LOS Jumper 0 [ ] 1 [ ] 2 [ ]  Fault Jumper 0 [ ] 1 [ ]
Approach configuration switch position:  Normal [ ]  Short [X]  Very Short [ ]

Adjust Select Adjustments

| No. | Adjustment | Default | Range | Track 1 | Track 2 |
|---|---|---|---|---|---|
| 1 | Approach Length | 9,999 | 0 - 9,999 | 1840 feet | 500 feet |
| 2 | Warning Time | 99 | 23 - 99 | 45 seconds | 45 seconds |
| 3 | LIA | 0 | -9 to +9 | XX steps | XX steps |
| 4 | TC (1 step = 32) | 395 | 430 - 470 | XX steps | XX steps |
| 5 | MD Restart | 99% | 0 - 99% | XX RX | XX RX |

Option Adjustments

| No. | Adjustment | Default | Range | Track 1 | Track 2 |
|---|---|---|---|---|---|
| 0 | RX | 0 | 1-100 | | |
| 1 | TK-ENA | UP | UP or dn | UP [X] dn [ ] | UP [X] dn [ ] |
| 2 | TK FO | 0 | 0 - 9999 | 790 Hz | 790 Hz |
| 3 | CW/MD | d | C to d | C [X] d [ ] | C [X] d [ ] |
| 4 | UNI-BI | b | U - b | U [ ] b [X] | U [X] b [ ] |
| 5 | NBS-C | 0 | 0 - 99 | 99 RX | 99 RX |
| | | 9,999 | RX dependant | XXXX feet | XXXX feet |
| 6 | CWEWT | 80 | 0 - 99 | 80 seconds | 80 seconds |
| 7 | LOS | 16 | 4 - 99 | 30 seconds | 30 seconds |
| 8 | IJ-LOS | 5 | 3 - 99 | 5 seconds | 5 seconds |
| 9 | BC | frequency dependant | 50 -250 | XXX | XXX |
| 10 | P-COMP | 0 | 0 - 10 | XX degrees | XX degrees |

HXP-3, HXP-3R, HXP-3R2

AX Adjustment Options  NOTE: NO AX DRIVE IS USED AT THIS LOCATION

| | Default | Range | Option 11 - AX1 | Option 12 - AX2 | Option 13 - AX3 |
|---|---|---|---|---|---|
| TK-ASN | | 1, 2, Both | 1 [ ] 2 [ ] Both [ ] | 1 [ ] 2 [ ] Both [ ] | 1 [ ] 2 [ ] Both [ ] |
| OF-TK1 | 0 | 0 - 9,999 | feet | feet | feet |
| OF-TK2 | 0 | 0 - 9,999 | feet | feet | feet |
| WT | 99 | 23 - 99 | seconds | seconds | seconds |
| MD-RST | 99 | 0 - 99% | RX | RX | RX |
| CW/MD | d | C or d | C [ ] d [ ] | C [ ] d [ ] | C [ ] d [ ] |
| CJ-LOS | 0 | 3 - 99 | seconds | seconds | seconds |
| PJ-DET | 15 | 4 - 15 | seconds | seconds | seconds |
| POS-ST | dn | UP or dn | UP [ ] dn [ ] | UP [ ] dn [ ] | UP [ ] dn [ ] |

| No. | Adjustment | Default | Range | Track 1 | Track 2 |
|---|---|---|---|---|---|
| 17 | MDR-AX | n* | n or A | n [X] A [ ] | n [X] A [ ] |
| | OF-TK1 | 0 | 0 - 9,999 | 0 feet | |
| | OF-TK2 | 0 | 0 - 9,999 | | feet |
| | CJ-LOS | 0 | 3 - 99 | seconds | seconds |
| | PJ-DET | 15 | 4 - 15 | seconds | seconds |
| 18 | MD-TMR | 10 | 10-99 (0=disable) | minutes | minutes |
| 19 | MIN-WT | 0 | 23-99 (0=disable) | seconds | seconds |
| 20 | FS-DET | 0 | 10-30 (0=disable) | minutes | minutes |
| 21 | POS-RX | 0 | 0 - 74 (0=disable) | RX | RX |
| | POS-TM | 0 | 0 - 99** | minutes | minutes |
| 22 | AR-TMR | 0 | 0-80 (0=disable) | minutes | minutes |
| 47 | ATO-RX | dn | UP or dn | UP [ ] dn [X] | UP [ ] dn [X] |
| 48 | PF-ENA | UP | UP or dn | UP [X] dn [ ] | UP [X] dn [ ] |

***n = not an AX drive (no options available)**
****0 = disable, 99 = continuous**

Shunt Record

| West Approach | | No Shunt RX | No Shunt Phase | 100% Shunt RX | 100% Shunt Phase | 50% Shunt | 50% Shunt RX | 50% Shunt Phase | LIA Added 1/16 1 to 9 |
|---|---|---|---|---|---|---|---|---|---|
| Track 1 | Normal | | | | | | | | |
| | Standby | | | | | | | | |
| Track 2 | Normal | | | | | | | | |
| | Standby | | | | | | | | |
| East Approach | | | | | | | | | |
| Track 1 | Normal | | | | | | | | |
| | Standby | | | | | | | | |
| Track 2 | Normal | | | | | | | | |
| | Standby | | | | | | | | |

PROPOSED
DES. No. _____
RED-IN  YELLOW-OUT
AS INSTALLED
DATE _____
BY _____

8' X 10' BUNGALOW

| PROPOSED D | M | Y | REVISIONS | D | C | COMPLETED D | M | Y | C |
|---|---|---|---|---|---|---|---|---|---|
| | | | | | | | | | |

REGION SOUTHERN
SUB. MATTESON 334
SIGNALS AND COMMUNICATIONS HOMEWOOD
23 JULY 2010
DES. MKN
CH. DTB
HXP-3R2 UNIT#3
PROGRAM CONFIGURATION
MAIN STREET
MATTESON, IL
MTS-021.61-11

SAFETRAN SYSTEM CORP.
LOUISVILLE DIVISION, LOUISVILLE, KY

SAFETRAN SYSTEMS CORPORATION
DES.: MKN  DATE: 23/07/10  JOB NO.: PICA10249
CKD.: DTB  ISSUE DATE: N/A  EST. NO.: N/A
DRN.: APL  PLAN NO.: N/A  SHEET 11 OF 26
P TIME: 15:56  P DATE: 25-OCT-2010  CAD ID.: MTS-021.61-11

mts-021.61-11.dgn
25-OCT-2010

$WATERMARK

| REVISIONS | | | | |
|---|---|---|---|---|
| NO. | DATE | BY | DESCRIPTION | APP. BY |
| 1 | | | | |
| 2 | | | | |
| 3 | | | | |
| 4 | | | | |
| 5 | | | | |

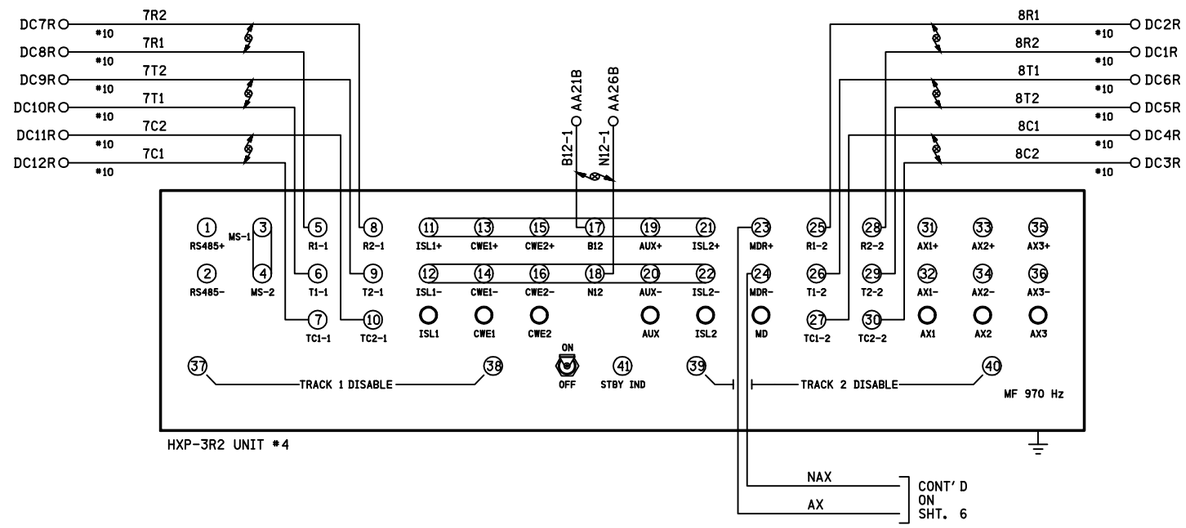


NOTES:

1) ALL WIRING #16 AWG UNLESS OTHERWISE NOTED.

2) DENOTES TWISTED PAIR.

PROPOSED
DES. No. _____
RED-IN YELLOW-OUT

AS INSTALLED
DATE _____
BY _____

8' X 10' BUNGALOW

| PROPOSED D | M | Y | REVISIONS | D | C | COMPLETED D | M | Y | C |
|---|---|---|---|---|---|---|---|---|---|
| | | | | | | | | | |

REGION SOUTHERN
SUB. MATTESON 334

SIGNALS AND COMMUNICATIONS HOMEWOOD
23 JULY 2010
DES. MKN
CH. DTB

HXP-3R2 UNIT#4
TRACKS 7 & 8 CONNECTIONS
MAIN STREET
MATTESON, IL

MTS-021.61-12

SAFETRAN SYSTEM CORP.
LOUISVILLE DIVISION, LOUISVILLE, KY

SAFETRAN SYSTEMS CORPORATION

| | | |
|---|---|---|
| DES.: MKN | DATE: 23/07/10 | JOB NO.: PICA10249 |
| CKD.: DTB | ISSUE DATE: N/A | EST. NO.: N/A |
| DRN.: APL | PLAN NO.: N/A | SHEET 12 OF 26 |
| P TIME: 15:56 | P DATE: 25-OCT-2010 | CAD ID.: MTS-021.61-12 |

mts-021.61-12.dgn
25-OCT-2010

$WATERMARK

| REVISIONS NO. | DATE | BY | DESCRIPTION | APP. BY |
|---|---|---|---|---|
| 1 | | | | |
| 2 | | | | |
| 3 | | | | |
| 4 | | | | |
| 5 | | | | |

UNIT #4 — Grade Crossing Location Record

Cabinet Number (Option 90): XXXX

Location: Main Street  Milepost: 21.61  DOT: 260 636b  Date: XX / XX / 10

Operating Program  HPN: _____  Version: XXXXX

System Monitor Program  HPN: _____  Version: XXXXX

Hardware Settings

Track 1  Master [X]  Slave [ ]  4 kHz [ ]  8 kHz [ ]
LOS Jumper 0 [ ] 1 [ ] 2 [ ]  Fault Jumper 0 [ ] 1 [ ]
Approach configuration switch position:  Normal [ ]  Short [X]  Very Short [ ]

Track 2  Master [ ]  Slave [X]  4 kHz [ ]  8 kHz [ ]
LOS Jumper 0 [ ] 1 [ ] 2 [ ]  Fault Jumper 0 [ ] 1 [ ]
Approach configuration switch position:  Normal [ ]  Short [X]  Very Short [ ]

Adjust Select Adjustments

| No. | Adjustment | Default | Range | Track 1 | Track 2 |
|---|---|---|---|---|---|
| 1 | Approach Length | 9,999 | 0 - 9,999 | 600 feet | 1000 feet |
| 2 | Warning Time | 99 | 23 - 99 | 40 seconds | 40 seconds |
| 3 | LIA | 0 | -9 to +9 | XX steps | XX steps |
| 4 | TC (1 step = 32) | 395 | 430 - 470 | XX steps | XX steps |
| 5 | MD Restart | 99% | 0 - 99% | XX RX | XX RX |

Option Adjustments

| No. | Adjustment | Default | Range | Track 1 | Track 2 |
|---|---|---|---|---|---|
| 0 | RX | 0 | 1-100 | | |
| 1 | TK-ENA | UP | UP or dn | UP [X] dn [ ] | UP [X] dn [ ] |
| 2 | TK FO | 0 | 0 - 9999 | 970 Hz | 970 Hz |
| 3 | CW/MD | d | C to d | C [X] d [ ] | C [X] d [ ] |
| 4 | UNI-BI | b | U - b | U [X] b [ ] | U [X] b [ ] |
| 5 | NBS-C | 0 | 0 - 99 | 99 RX | 99 RX |
| | | 9,999 | RX dependant | XXXX feet | XXXX feet |
| 6 | CWEWT | 80 | 0 - 99 | 80 seconds | 80 seconds |
| 7 | LOS | 16 | 4 - 99 | 30 seconds | 30 seconds |
| 8 | IJ-LOS | 5 | 3 - 99 | 5 seconds | 5 seconds |
| 9 | BC | frequency dependant | 50 -250 | XXX | XXX |
| 10 | P-COMP | 0 | 0 - 10 | XX degrees | XX degrees |

HXP-3, HXP-3R, HXP-3R2

AX Adjustment Options  NOTE: NO AX DRIVE IS USED AT THIS LOCATION

| | Default | Range | Option 11 - AX1 | Option 12 - AX2 | Option 13 - AX3 |
|---|---|---|---|---|---|
| TK-ASN | | 1, 2, Both | 1 [ ] 2 [ ] Both [ ] | 1 [ ] 2 [ ] Both [ ] | 1 [ ] 2 [ ] Both [ ] |
| OF-TK1 | 0 | 0 - 9,999 | feet | feet | feet |
| OF-TK2 | 0 | 0 - 9,999 | feet | feet | feet |
| WT | 99 | 23 - 99 | seconds | seconds | seconds |
| MD-RST | 99 | 0 - 99% | RX | RX | RX |
| CW/MD | d | C or d | C [ ] d [ ] | C [ ] d [ ] | C [ ] d [ ] |
| CJ-LOS | 0 | 3 - 99 | seconds | seconds | seconds |
| PJ-DET | 15 | 4 - 15 | seconds | seconds | seconds |
| POS-ST | dn | UP or dn | UP [ ] dn [ ] | UP [ ] dn [ ] | UP [ ] dn [ ] |

| No. | Adjustment | Default | Range | Track 1 | Track 2 |
|---|---|---|---|---|---|
| 17 | MDR-AX | n* | n or A | n [ ] A [X] | n [ ] A [X] |
| | OF-TK1 | 0 | 0 - 9,999 | 500 feet | |
| | OF-TK2 | 0 | 0 - 9,999 | | 1000 feet |
| | CJ-LOS | 0 | 3 - 99 | seconds | seconds |
| | PJ-DET | 15 | 4 - 15 | 15 seconds | 15 seconds |
| 18 | MD-TMR | 10 | 10-99 (0=disable) | minutes | minutes |
| 19 | MIN-WT | 0 | 23-99 (0=disable) | seconds | seconds |
| 20 | FS-DET | 0 | 10-30 (0=disable) | minutes | minutes |
| 21 | POS-RX | 0 | 0 - 74 (0=disable) | RX | RX |
| | POS-TM | 0 | 0 - 99** | minutes | minutes |
| 22 | AR-TMR | 0 | 0-80 (0=disable) | minutes | minutes |
| 47 | ATO-RX | dn | UP or dn | UP [ ] dn [X] | UP [ ] dn [X] |
| 48 | PF-ENA | UP | UP or dn | UP [X] dn [ ] | UP [X] dn [ ] |

***n = not an AX drive (no options available)**
****0 = disable, 99 = continuous**

Shunt Record

| West Approach | | No Shunt RX | No Shunt Phase | 100% Shunt RX | 100% Shunt Phase | 50% Shunt | 50% Shunt RX | 50% Shunt Phase | LIA Added 1/16 1 to 9 |
|---|---|---|---|---|---|---|---|---|---|
| Track 1 | Normal | | | | | | | | |
| | Standby | | | | | | | | |
| Track 2 | Normal | | | | | | | | |
| | Standby | | | | | | | | |
| East Approach | | | | | | | | | |
| Track 1 | Normal | | | | | | | | |
| | Standby | | | | | | | | |
| Track 2 | Normal | | | | | | | | |
| | Standby | | | | | | | | |

PROPOSED
DES. No. _____
RED-IN  YELLOW-OUT
AS INSTALLED
DATE _____
BY _____

8' X 10' BUNGALOW

| PROPOSED D | M | Y | REVISIONS | D | C | COMPLETED D | M | Y | C |
|---|---|---|---|---|---|---|---|---|---|
| | | | | | | | | | |

REGION SOUTHERN
SUB. MATTESON 334
SIGNALS AND COMMUNICATIONS HOMEWOOD
23 JULY 2010
DES. MKN
CH. DTB
HXP-3R2 UNIT#4
PROGRAM CONFIGURATION
MAIN STREET
MATTESON, IL
MTS-021.61-13

SAFETRAN SYSTEM CORP.
LOUISVILLE DIVISION, LOUISVILLE, KY

SAFETRAN SYSTEMS CORPORATION
DES.: MKN  DATE: 23/07/10  JOB NO.: PICA10249
CKD.: DTB  ISSUE DATE: N/A  EST. NO.: N/A
DRN.: APL  PLAN NO.: N/A  SHEET 13 OF 26
P TIME: 15:56  P DATE: 25-OCT-2010  CAD ID.: MTS-021.61-13

mts-021.61-13.dgn
25-OCT-2010

$WATERMARK

| REVISIONS | | | | |
|---|---|---|---|---|
| NO. | DATE | BY | DESCRIPTION | APP. BY |
| 1 | 25/10/10 | NAD | PED GATES CIRCUIT REV | BJW |
| 2 | | | | |
| 3 | | | | |
| 4 | | | | |
| 5 | | | | |

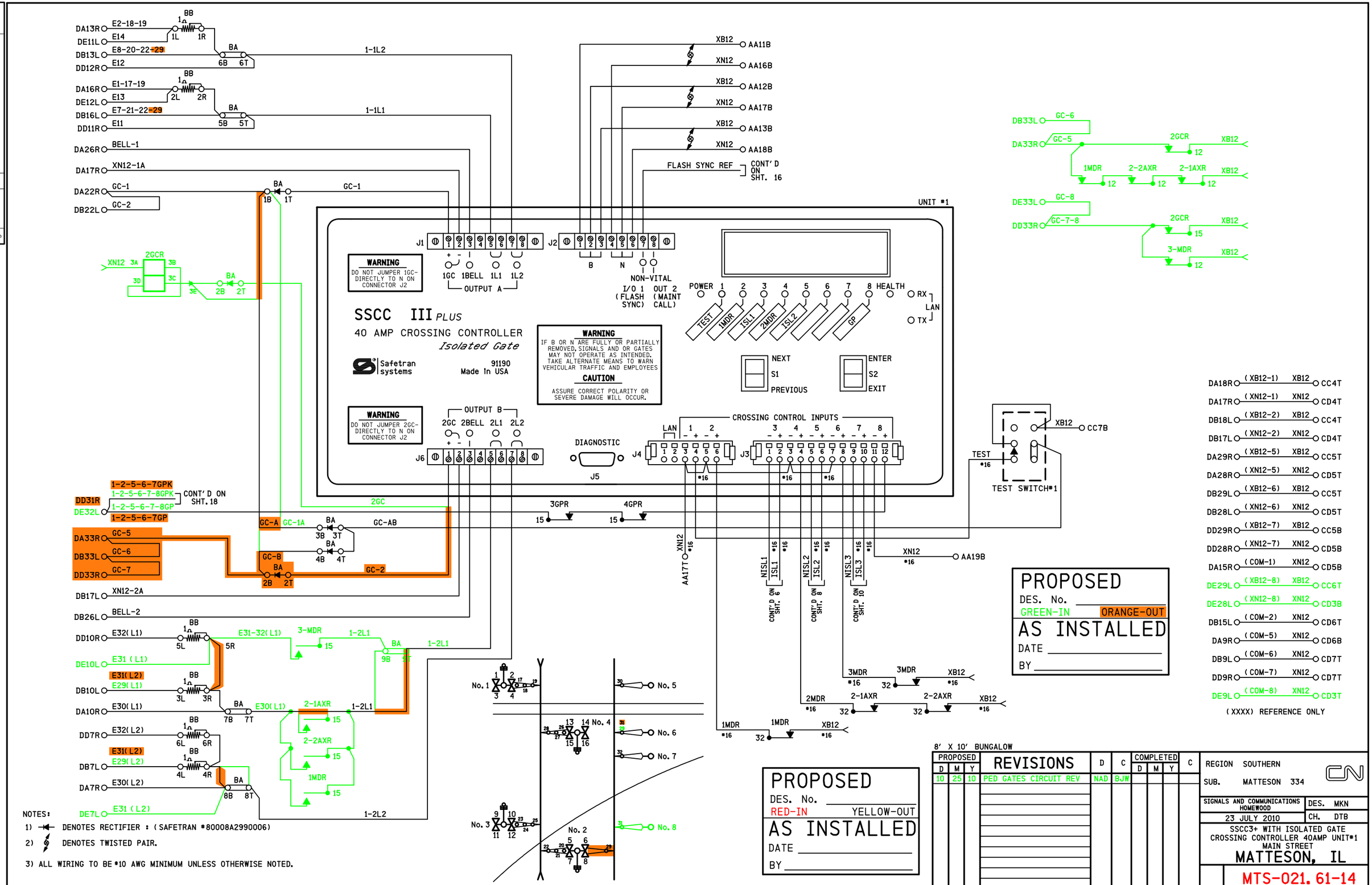


| SAFETRAN SYSTEMS CORPORATION | | | |
|---|---|---|---|
| DES.: MKN | DATE: 23/07/10 | JOB NO.: PICA10249 | |
| CKD.: DTB | ISSUE DATE: N/A | EST. NO.: N/A | |
| DRN.: APL | PLAN NO.: N/A | SHEET 14 OF 26 | |
| P TIME: 15:56 | P DATE: 25-OCT-2010 | CAD ID.: MTS-021.60-14 | |

8' X 10' BUNGALOW

| PROPOSED D | PROPOSED M | PROPOSED Y | REVISIONS | D | C | COMPLETED D | COMPLETED M | COMPLETED Y | C |
|---|---|---|---|---|---|---|---|---|---|
| 10 | 25 | 10 | PED GATES CIRCUIT REV | NAD | BJW | | | | |

REGION SOUTHERN
SUB. MATTESON 334

SIGNALS AND COMMUNICATIONS HOMEWOOD
DES. MKN
23 JULY 2010
CH. DTB

SSCC3+ WITH ISOLATED GATE
CROSSING CONTROLLER 40AMP UNIT#1
MAIN STREET
MATTESON, IL

MTS-021.61-14

SAFETRAN SYSTEM CORP.
LOUISVILLE DIVISION, LOUISVILLE, KY

mts-021.61-14.dgn
25-OCT-2010

$WATERMARK

| REVISIONS | | | | |
|---|---|---|---|---|
| NO. | DATE | BY | DESCRIPTION | APP. BY |
| 1 | | | | |
| 2 | | | | |
| 3 | | | | |
| 4 | | | | |
| 5 | | | | |

UNIT#1

CROSSING CONTROLLER SSCCIII+ 40-AMPERE UNIT, 91190

| PROGRAM | NOTES | INITIAL SETTING BY: _____ DATE: _____ |
|---|---|---|
| FLASH RATE: | 30-70 FLASHES/MINUTE DEFAULT = 50 | 60 FLASHES/MINUTE |
| GATES USED: | YES/NO DEFAULT = YES | ☑ YES ☐ NO |
| 1 GC DELAY: | 3-20 SEC., DEFAULT = 4 | 4 SECONDS |
| 2 GC DELAY (40 AMP UNIT): | 3-20 SEC., DEFAULT = 4 | 4 SECONDS |
| GATE RISING BELL: | ON/OFF, DEFAULT = ON | ☐ ON ☑ OFF |
| ENABLED INPUTS: | 1 THRU 7 ONLY | ☑1 ☑2 ☑3 ☑4 ☑5 ☑6 ☑7 |
| GC2/I7: | GC2 NORMAL, I7 = NORMAL<br>GC2 INVERTED, I7 = NORMAL<br>GC2 PRMT RELAY, I7 = PRMT<br>HEALTH GC2 BEACONFDBK | ☑ NORMAL ☐ INVERTED<br>☐ PRE-EMPT SIM<br>☐ PRE-EMPT ADV<br>☐ BEACON |
| INPUT 7 | INPUT, PRMT HLTH, TEST SW | ☑ IN ☐ HEALTH ☐ TEST SW |
| TEST SW 2TRKDSTK ONLY | ACTIVATE, ACT & STICK RELEASE | ☐ ACTIVATE ☐ ACT & REL |
| ADV PRE-EMPT TIME (40A): | 1-99 SEC., DEFAULT = 1 | N/A SECONDS |
| MIN ACTIVATION TIME: | 0-99 SEC., DEFAULT = 20 | 25 SECONDS |
| STICK RELEASE TIME: | 5-120 MIN., DEFAULT = 15 | N/A MINUTES |
| BEACON PICK-UP DELAY | 5-600 SEC., DEFAULT = 20 | N/A SECONDS |
| SUP ISLAND TIME: | 5-20 MIN., DEFAULT = 20 | N/A MINUTES |
| ENABLED OUTPUTS: (40 amp only) | DEFAULT = A + B | ☑ A + B ☐ A ☐ B |
| DAYLIGHT SAVINGS: | DEFAULT = DISABLED | ☑ ENABLED ☐ DISABLED |
| DATE: | N/A | ☐ DATE SET |
| TIME: | 24-FORMAT | ☐ TIME SET |
| PASSWORD: | DEFAULT = DISABLED | ☐ ENABLED ☑ DISABLED |
| **CONFIGURE** | | |
| LOS TIMERS: | 0-20 SECONDS, INPUTS 1-7 ONLY<br>DEFAULT = 0 | 1: 0 SEC 5: 0 SEC<br>2: 0 SEC 6: 0 SEC<br>3: 0 SEC 7: 0 SEC<br>4: 0 SEC |
| MCF: | | MCF: BASICPLS<br>CRC: _____ |
| ATCS ADDRESS: | DEFAULT = 700000000000 | |
| LOW BATTERY: | 9.0-15.0 VOLTS, OR DISABLED<br>DEFAULT = DISABLED | ☑ DISABLED<br>☐ ENABLED _____ VOLTS |
| AUX I/O: | DEFAULT = NONVITAL OUTPUT | ☐ NV OUTPUT ☐ FLASH SYNC IN<br>☑ FLASH SYNC OUT |
| DETECT LAMP NEUTRAL WIRE | DEFAULT = YES | ☐ YES<br>☑ NO |
| **TEST CONFIGURE** | | |
| LAMP TEST CANCEL TIMER: | 1-15 MINUTES, DEFAULT = 5 | 5 MINUTES |
| LAMP TEST DELAY TIMER: | 30-120 SEC., DEFAULT = 30 | 30 SEC. |
| LAMP TEST ON TIMER: | 15-60 SEC., DEFAULT = 15 | 15 SEC. |

STANDARD SETUP LAMP VOLTAGES PROCEDURE
USING TRUE RMS AC+DC METER, OR CONVERSION TABLE BELOW

| SETUP LAMP VOLTAGES | INITIAL SETTINGS BY: _____<br>DATE: _____<br>METER: _____ |
|---|---|
| FAR GATE | 1 L1 = _____ VOLTS<br>1 L2 = _____ VOLTS<br>2 L1 = _____ VOLTS<br>2 L2 = _____ VOLTS |
| SSCCIII+ | 1 L1 = _____ VOLTS<br>1 L2 = _____ VOLTS<br>2 L1 = _____ VOLTS<br>2 L2 = _____ VOLTS |
| NEAR GATE | 1 L1 = _____ VOLTS<br>1 L2 = _____ VOLTS<br>2 L1 = _____ VOLTS<br>2 L2 = _____ VOLTS |

MULTIMETER READING VARIANCE FROM ACTUAL LAMP VOLTAGE

| BATTERY BANK VOLTAGE | VALID LAMP OUTPUT RANGE (In volts) | DIGITAL METER (FLUKE 87 OR EQUIVALENT) | ANALOG METER (SIMPSON 260 OR TS111) |
|---|---|---|---|
| 13.3 | 9.0 TO 12.0 | 1.3 VOLTS BELOW ACTUAL VALUE | 0.6 VOLTS BELOW ACTUAL VALUE |
| 14.7 | 9.0 TO 12.0 | 2.2 VOLTS BELOW ACTUAL VALUE | 1.1 VOLTS BELOW ACTUAL VALUE |
| 15.8 | 9.0 TO 12.0 | 2.6 VOLTS BELOW ACTUAL VALUE | 2.0 VOLTS BELOW ACTUAL VALUE |

FOR LAMP OUTPUT SETTINGS GREATER THAN 12.0 VOLTS, REDUCE THE LISTED VALUES BY 30%
LAMP VOLTAGE MEASUREMENTS SHOULD BE ACCURATE TO 0.3 VOLTS.

SOFTWARE VERSION: 9V546-A01.K

PROPOSED
DES. No. _____
RED-IN YELLOW-OUT
AS INSTALLED
DATE _____
BY _____

8' X 10' BUNGALOW

| PROPOSED D | M | Y | REVISIONS | D | C | COMPLETED D | M | Y | C |
|---|---|---|---|---|---|---|---|---|---|
| | | | | | | | | | |

REGION SOUTHERN
SUB. MATTESON 334
SIGNALS AND COMMUNICATIONS HOMEWOOD
23 JULY 2010
DES. MKN
CH. DTB
SSCCIII+ UNIT#1
PROGRAM DATA
MCLINDON ROAD
MATTESON, IL
MTS-021.61-15

SAFETRAN SYSTEMS CORPORATION
DES.: MKN DATE: 23/07/10 JOB NO.: PICA10249
CKD.: DTB ISSUE DATE: N/A EST. NO.: N/A
DRN.: APL PLAN NO.: N/A SHEET 15 OF 26
P TIME: 15:56 P DATE: 25-OCT-2010 CAD ID.: MTS-021.61-15

mts-021.61-15.dgn
25-OCT-2010

SAFETRAN SYSTEM CORP.
LOUISVILLE DIVISION, LOUISVILLE, KY