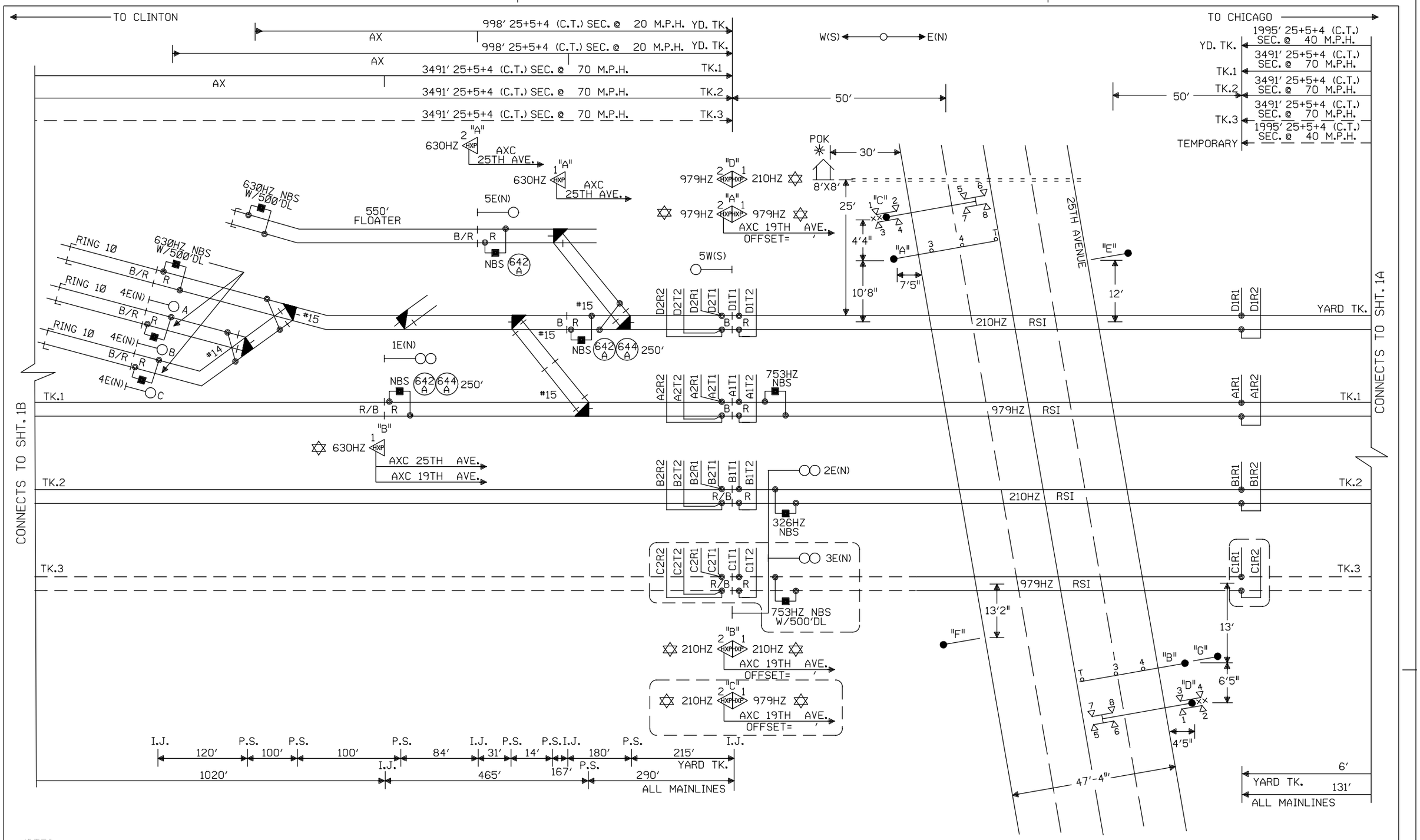

NOTES:

⊗ = TWISTED WIRES
INSULATED 1 TWIST PER FT.
ALL TRACK WIRES 2C. #6

TRANSMITTER AND RECEIVER LEADS TO BE SEPARATED BY AT LEAST 12" IN TRENCH, LENGTHS SHOULD NOT EXCEED MANUFACTURES RECOMMENDATION.

TOP OF FOUNDATION TO BE AT SAME ELEVATION AS THE SURFACE OF THE TRAVELED WAY & NO MORE THAN 4" ABOVE THE SURFACE OF THE GROUND.

ALL BUNGALOW WIRING TO BE #16 AWG FLEX UNLESS OTHERWISE SPECIFIED EXCEPT ALL GROUND WIRE TO BE #6 AWG FLEX OR LARGER.

ALL WIRING IN GATE MECHANISM TO BE #10 "AWG FLEX".
REFER TO UP STANDARD DWG FOR BUNGALOW GROUNDING.

PORTABLE GENERATOR EXTENSION CORD FOR 240V TO 240V IS PROVIDED AS WELL AS A 120V TO 240V ADAPTER.

ALL LIGHTS TO BE 12" ROUNDELS.

= = = = = = 4" X ✳ ' CONDUIT

LIGHTS: LED LIGHTS

GATE "A": ✳'
GATE "B": ✳'
CANT "C": ✳'
CANT "D": ✳'
xx = BELL

— — — = FUTURE

✡ = HXP TO OPERATE IN SEMI-BI DIRECTIONAL MODE.

△ = ENSURE TRACK POLARITY IS TRANSPOSED ACROSS ALL INSULATED JOINTS.

✳ = FIELD TO SUPPLY DISTANCE.

CONSTRUCTION NOTE :

1. - REUSE EXISTING GATES AND CANTILEVER FLASHERS.
2. - REUSE EXISTING CRTU EQUIPMENT.

NEW SHEET

Designed 02/11/10 CHICAGO CREATE PROJECT - B2 25TH AVENUE Rec#: WO#: 89794 IS: /JJL / / RC/MDF	MODIFICATION LEVEL Q. A. LAST LEVEL CHECKED DR LAST LEVEL MOD THIS TYPICAL DR LAST LEVEL BY DESIGNER DS CHANGED FROM TYPICAL? Y REV 02.01.09 4K 2TUCGTYP.1	UNION PACIFIC QUALITY PRODUCTIVITY SAFETY SIGNAL DESIGN	Date: 02/11/10 Des: RC Chk: JJL AFE: 89794	**UNION PACIFIC RAILROAD** CHICAGO, ILLINOIS 25TH. AVENUE GENEVA SUBDIVISION Office of Sr AVP Engineering - Signal/TCO Omaha, Nebraska	Sh.: 1 DOT 174 010L MP: 11.73 ID: GEN1173.1X

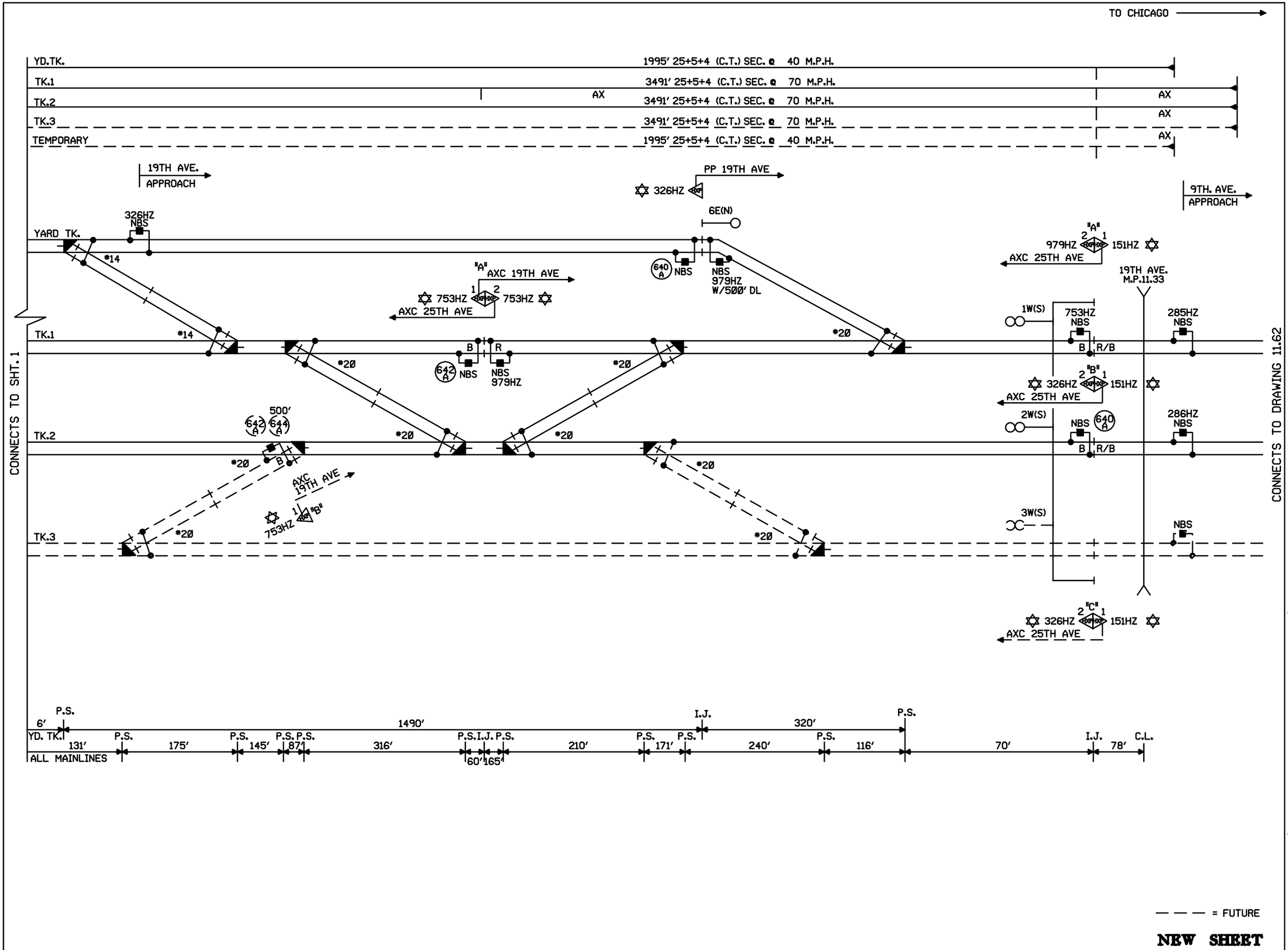

NEW SHEET

Designed 02/11/10 CHICAGO CREATE PROJECT - B2 25TH AVENUE Rec#: WO#: 89794 IS: /JJL / / RC/MDF	MODIFICATION LEVEL		UNION PACIFIC QUALITY PRODUCTIVITY SAFETY SIGNAL DESIGN	Date: 02/11/10 Des: RC Chk: JJL AFE: 89794	UNION PACIFIC RAILROAD CHICAGO, ILLINOIS 25TH. AVENUE GENEVA SUBDIVISION Office of Sr AVP Engineering - Signal/TCO Omaha, Nebraska	Sh.: 1A DOT 174 010L MP: 11.73 ID: GEN1173.1AX
	Q. A. LAST LEVEL CHECKED	DR				
	LAST LEVEL MOD THIS TYPICAL	DR				
	LAST LEVEL BY DESIGNER	DS				
	CHANGED FROM TYPICAL?	Y				
	REV 02.01.09 4K 2TUCGTYP.1					

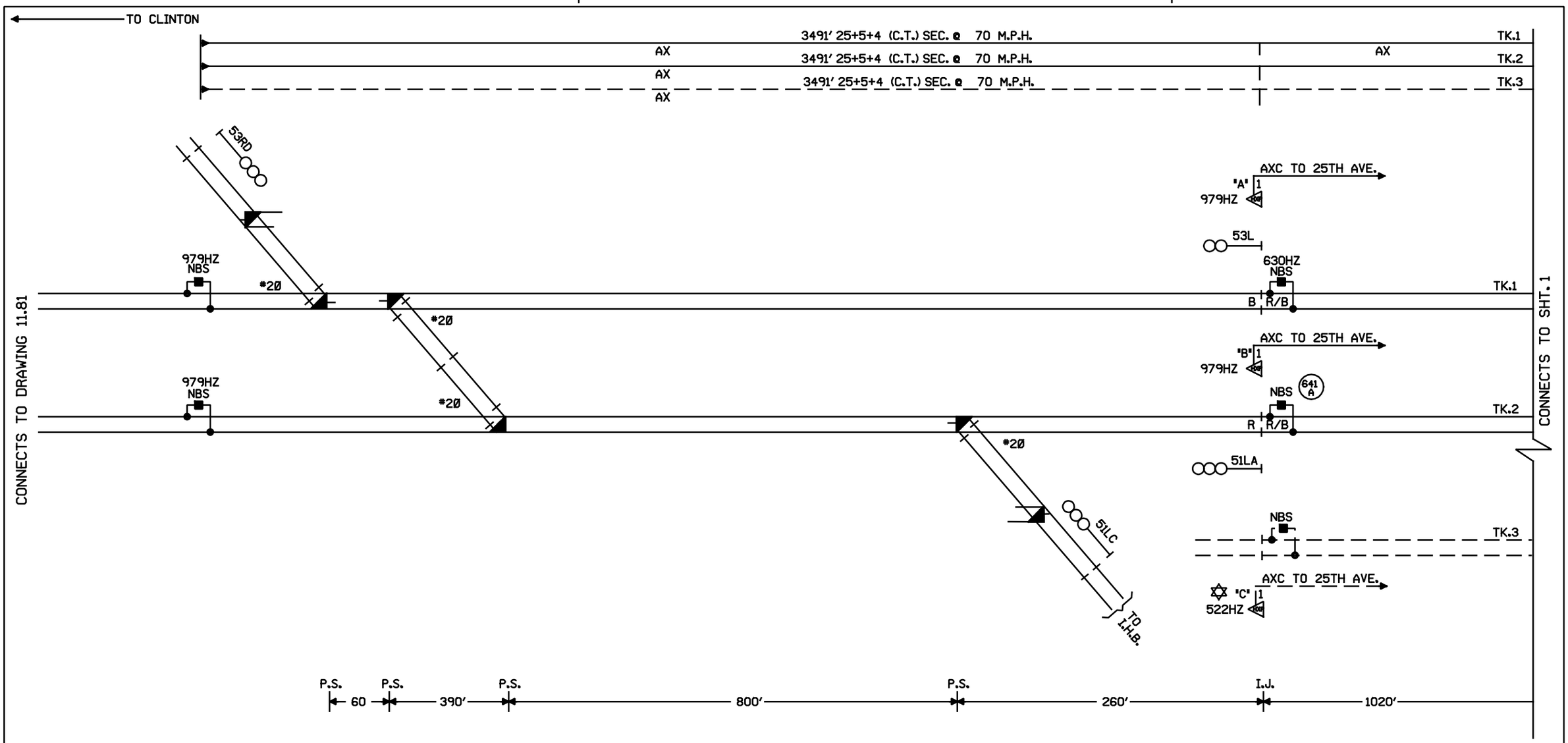

NEW SHEET

Designed 02/11/10 CHICAGO CREATE PROJECT - B2 25TH AVENUE Rec#: WO#: 89794 IS: /JJL / RC/MDF	MODIFICATION LEVEL Q. A. LAST LEVEL CHECKED DR LAST LEVEL MOD THIS TYPICAL DR LAST LEVEL BY DESIGNER DS CHANGED FROM TYPICAL? Y REV 02.01.09 4K 2TUCGTYP.1	UNION PACIFIC QUALITY PRODUCTIVITY SAFETY SIGNAL DESIGN	Date: 02/11/10 Des: RC Chk: JJL AFE: 89794	UNION PACIFIC RAILROAD CHICAGO, ILLINOIS 25TH. AVENUE GENEVA SUBDIVISION Office of Sr AVP Engineering - Signal/TCO Omaha, Nebraska	Sh.: 1B DOT 174 010L MP: 11.73 ID: GEN1173.1BX

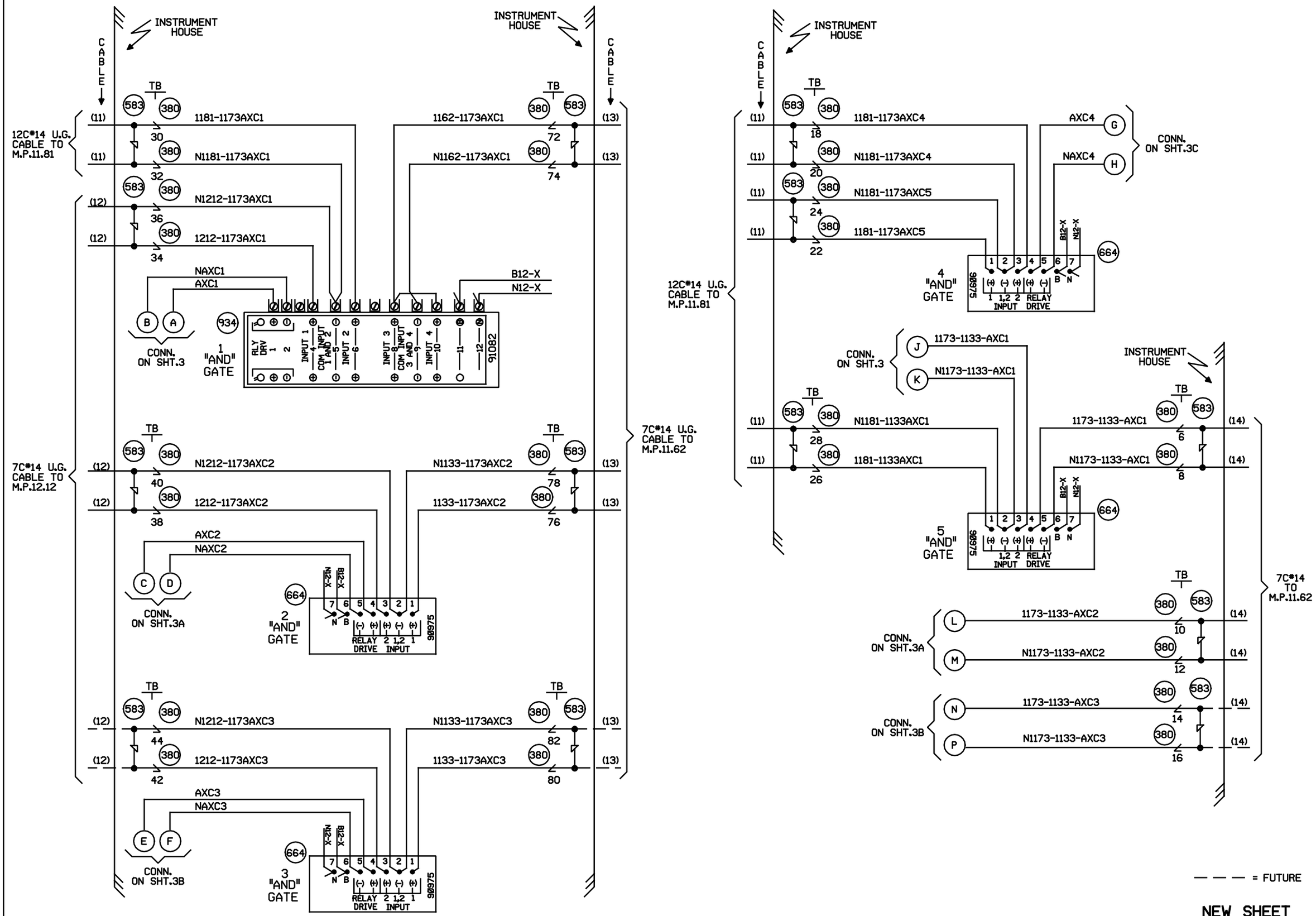

Designed 02/11/10	MODIFICATION LEVEL		
CHICAGO CREATE PROJECT - B2 25TH AVENUE	Q.A. LAST LEVEL CHK'D.	DD	
Rec#: WO#: 89794	LAST LEVEL MOD. THIS TYP.	DB	
IS: JJL	LAST LEVEL BY DESIGNER.	DS	
RC/MDF	CHANGED FROM TYP.? Y/N	Y	

UNION PACIFIC — QUALITY PRODUCTIVITY SAFETY — SIGNAL DESIGN

Date: 02/11/10
Des: RC
Chk: JJL
AFE: 89794

UNION PACIFIC RAILROAD
CHICAGO, ILLINOIS
25TH. AVENUE
GENEVA SUBDIVISION
Office of Sr AVP Engineering - Signal/TCO Omaha, Nebraska

Sh.: 1C
DOT 174 010L
MP: 11.73
ID: GEN1173.1CX

(REV. 01.02.21) (HXPRMOTE.3)

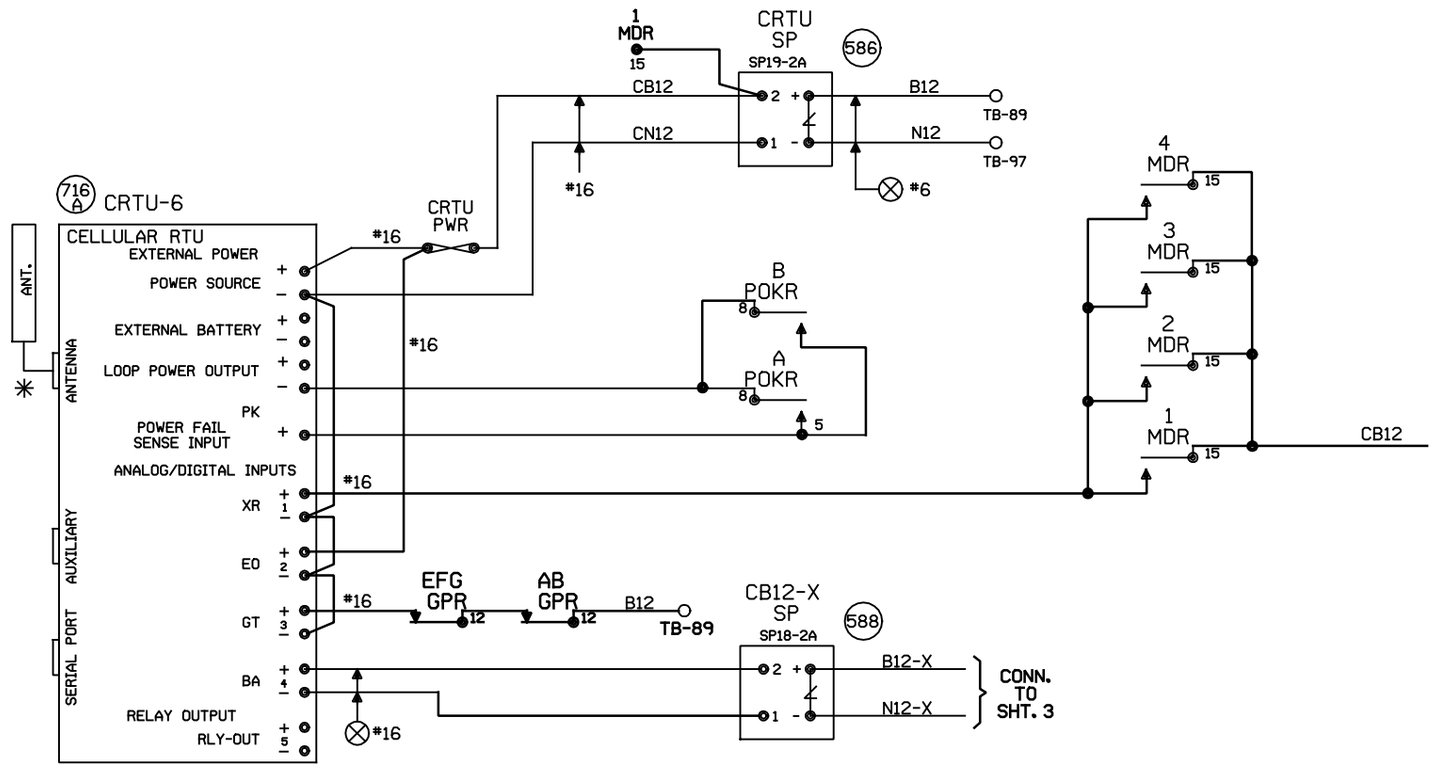

MOUNT CRTU AT LEAST 18" AWAY FROM HIGH VOLTAGE POWER SOURCES

NOTES:

ALL DIODES 1N5060 OR 1N4004 UNLESS OTHERWISE NOTED.

MOUNT ANTENNA ON TOP OF HOUSE.

ALL WIRES #18 UNLESS OTHERWISE NOTED.

ALL UNUSED 'NC' INPUTS MUST BE TIED HIGH TO BATTERY

ALL UNUSED ANALOG INPUTS MUST BE TIED HIGH TO BATTERY

ALL UNUSED 'NO' INPUTS MUST BE DISCONNECTED

ANALOG AND AC INPUT MODULES MUST BE MOUNTED LESS THAN 12" FROM CRTU

CRTU FRONT PANEL DISPLAY CHART INDICATES NORMAL STATE

DIGITAL INPUT HIGH, OR POWER FAIL INPUT CLOSED

DIGITAL INPUT LOW, OR POWER FAIL INPUT OPEN

NORMAL STATE FOR ANALOG CHANNELS IS EQUAL TO THE STORED NOMINAL VOLTAGE +120% OR -81%

L — LATCH IS SET BECAUSE CRTU DETECTED AN ALARM CONDITION

12.06V L

'sRUN MODE' 'sRUN MODE-SILENT'

CRTU RADIO IS DISABLED. REPROGRAM CRTU WITH LAPTOP.

UNIT INSTALLATION AND SETUP

R.R. SITE ID WHERE; SSSS = 4 CHARACTER SUBDIVISION ID. FILL WITH PRECEDING ZEROS AS REQUIRED. THE MAIN TRACK SUBDIVISION ID* IS IN THE CURRENT TIMETABLE. INDUSTRIAL LEADS, LEASED, AND LEAD TRACKS LISTED WITHIN THE SUBDIVISION MAY HAVE THEIR OWN UNIQUE SUBDIVISION ID*. DO NOT AUTOMATICALLY USE THE MAIN TRACK SUBDIVISION ID* FOR THESE OTHER TRACKS. ALWAYS DOUBLE CHECK WITH THE MOST CURRENT PRINTED COPY OF THE TIMETABLE.
LLLLLLLL = 8 CHARACTERS USE DOT* AT CROSSINGS, AND USE MP* AT WAYSIDE AND HBD SITES. FILL WITH PRECEDING DASHES AS REQUIRED.
THE MP* MUST USE A DECIMAL POINT TO SEPARATE NUMBERS.
AA = 2 CHARACTER STATE NAME FOR CROSSINGS.
AA = 'WD' FOR WAYSIDE LOCATIONS, AA = 'HB' FOR HBD SITES.
MUST BE 14 CHARACTERS LONG, NO SPACES ALLOWED.

SITE IDENTIFIER: SSSSLLLLLLLLAA	0001-174010LIL
SIGNAL STRENGTH dBm	
CARRIER ID	1175
FIRMWARE VERSION	2.3.06
SERIAL NUMBER	
CONFIGURATION NET	MICROBURST
SIGNAL STATUS	
SCADANET STATUS	
SILENCE INTERVAL	60 MINUTES
HEALTHCHECK INTERVAL	EVERY 2 DAYS
ALARM DEFER DELAY	240 MINUTES (4 HOURS)
OPERATION TO RESUME: RUN	
CALIBRATION CONSTANT	
CH4	
POWER SOURCE	

FIELD PROVIDES: SAMPLED NOMINAL VOLTAGES, SCADANET STATUS CALIBRATION CONSTANTS, SERIAL NUMBER, AND SIGNAL STATUS.

CHANNEL SETUP - STANDARD CONFIGURATION 32:XR,EOe,GTe,Ba

CHANNEL NORMAL STATE	SENSE (NO/NC)	NAME FUNCTION	RECOGNITION DELAY SECONDS ACTIVE	RECOGNITION DELAY SECONDS NORMAL	RETURN TO NORMAL	REPORTING MODE	ALARM LINKED CHANNEL	ALARM LINKED CRITERIA	EVENT LOGGING ENABLED OPTIONS
POWER FAIL (CH5)	POWER FAIL DETECT NO	PF1n-PK AC POWER FAIL	7,200 ALARM	300 NORMAL	ENABLED	ALERT	DISABLED	N/A	ANALOG VALUE SENT
CH1	DIGITAL INPUT NC	CH1-XR XR DOWN TO LONG	1,800 ALARM	1 NORMAL	ENABLED	ALERT	DISABLED	N/A	
CH2	DIGITAL INPUT NO	CH2-EOe LIGHT OUT	120 ALARM	10 NORMAL	ENABLED	ALERT	DISABLED	N/A	
CH3	DIGITAL INPUT NO	CH3-GTe GATES NOT UP/DOWN	120 ALARM	10 NORMAL	ENABLED	ALERT	DISABLED	N/A	DIGITAL EVENTS
CH4 STORED NOMINAL VOLTAGE	ANALOG INPUT N/A	CH4-Ba/V BATTERY MONITOR BATTERY LOW	600 ALARM	1200 NORMAL	ENABLED	ALERT W/UPDATE	DISABLED	N/A	PF1n-PK CH1-XR CH2-EOe CH3-GTe
POWER SOURCE (CH6)	ANALOG INPUT N/A	PS-Ba/V BATTERY MONITOR BATTERY LOW	600 ALARM	1200 NORMAL	ENABLED	ALERT W/UPDATE	DISABLED	N/A	

ANALOG CHANNEL	USEFUL RANGE VOLTS LOW	USEFUL RANGE VOLTS HIGH	DISPLAYED RANGE VOLTS LOW	DISPLAYED RANGE VOLTS HIGH	RELATIVE ALARM POINT LOW	RELATIVE ALARM POINT HIGH	ABSOLUTE ALARM POINT LOW	ABSOLUTE ALARM POINT HIGH	AUTOMATIC UPDATE INTERVAL	STORED NOMINAL VOLTAGE	SAMPLED NOMINAL VOLTAGE
CH4	0.0	30.00	0.0	30.00	81%	120%	10.0	29.0	14 DAYS	12.69	
POWER SOURCE	0.0	30.00	0.0	30.00	81%	120%	10.0	29.0	14 DAYS	12.69	
RELAY OUTPUT	NAME RLY-OUT		ACTIVE SET-UP-OPEN		NORMAL CLR-DN-CLOSE		PULSE DURATION		15 SECONDS	StdCfg Ver: 2.3.3 REV'D 9-20-02	

MAINTENANCE OPERATIONS

TO START OR ABORT ANY PROCEDURE

1. PRESS THE 'CANCEL' BUTTON FIRST

WHEN RESPONDING TO A CALL, PUT THE CRTU IN THE 'SILENCE ALARMS' MODE

1. PRESS 'SELECT' AND THEN '+ ARROW' BUTTON UNTIL
   DISPLAY: ACTION? SILENCE ALARMS
2. PRESS THE 'SELECT' BUTTON TWICE
3. CORRECT PROBLEM AND SIMULATE NORMAL TRAIN MOVEMENT THROUGH THE LOCATION
4. EXAMINE EACH CHANNEL ON THE CRTU
5. PRESS THE '+/- ARROW' BUTTON VERIFY ALL CHANNELS INDICATE A NORMAL STATE

NORMAL STATES ARE ON THE CHANNEL SETUP CHART

CLEAR TIMERS, LATCHES AND SEND ALL NORMAL

1. DO STEPS #1 - #5 ABOVE, AND PRESS 'CANCEL'.
2. PRESS 'SELECT' AND THEN '- ARROW' BUTTON UNTIL
   DISPLAY: ACTION? SERVICE MODE
3. PRESS 'SELECT' AGAIN TO RESET TIMERS, AND IF
   DISPLAY: SERVICE MODE ALL NORMAL
4. PRESS 'SELECT' AGAIN TO CLEAR LATCHES, AND SEND ALL NORMAL. SKIP STEPS #5-#6.
5. HOWEVER, IF ALARMS ARE NOT CLEARED;
   DISPLAY: SERVICE MODE ALARMS PENDING/PRESENT
6. PRESS 'CANCEL', CORRECT PROBLEM AND REPEAT STEPS #2 THRU #5 UNTIL ALL NORMAL SENT.

TO CANCEL THE 'SILENCE ALARMS' MODE

1. PRESS 'SELECT' AND THEN '+ ARROW' BUTTON UNTIL
   DISPLAY: ACTION? CANCEL SILENCE
2. PRESS THE 'SELECT' BUTTON AGAIN

EXAMINE & SET BATTERY VOLTAGE NOMINAL VALUE

1. PRESS THE '+ ARROW' OR '- ARROW' BUTTON UNTIL THE DESIRED CHANNEL IS DISPLAYED.
   DISPLAY: PS-BA: 13.83V NORMAL
2. VERIFY THE DISPLAYED READING WITH A DIGITAL VOLTMETER
3. PRESS THE 'SELECT' BUTTON, AND THE CRTU DISPLAY WILL SWITCH BETWEEN CURRENT/SAVED NOMINAL VOLTAGE VALUES.
   DISPLAY: NOMINAL ON #6? (CURRENT) 13.83
   DISPLAY: SAVED NOMINAL 6 (STORED) 12.69
4. PRESS THE 'SELECT' BUTTON AND THE CURRENT OR 'NOMINAL ON' VALUE WILL BE SAMPLED AND STORED AS THE 'SAVED NOMINAL' VALUE
5. VERIFY THE 'NOMINAL ON' AND 'SAVED NOMINAL' VALUES ARE EQUIVALENT, REPEAT STEPS #1 THRU #3 & PRESS THE 'CANCEL' BUTTON.

CRTU EQUIPMENT TO BE FIELD WIRED

NEW SHEET

Designed 02/11/10
CHICAGO CREATE PROJECT - B2 25TH AVENUE
Rec#: WO#: 89794
IS: JJL / RC/MDF

MODIFICATION LEVEL	
Q.A. LAST LEVEL CHK'D.	DG
LAST LEVEL MOD. THIS TYP.	DG
LAST LEVEL BY DESIGNER.	DS
CHANGED FROM TYP.? Y/N	Y

UNION PACIFIC QUALITY PRODUCTIVITY SAFETY
SIGNAL DESIGN

Date:	02/11/10
Des:	RC
Chk:	JJL
AFE:	89794

UNION PACIFIC RAILROAD
CHICAGO, ILLINOIS
25TH. AVENUE
GENEVA SUBDIVISION
Office of Sr AVP Engineering - Signal/TCO Omaha, Nebraska

Sh.:	1D
DOT	174 010L
MP:	11.73
ID:	GEN1173.1DX

(REV.03.06.01) (CRTUCFG32-2BAT.3X)

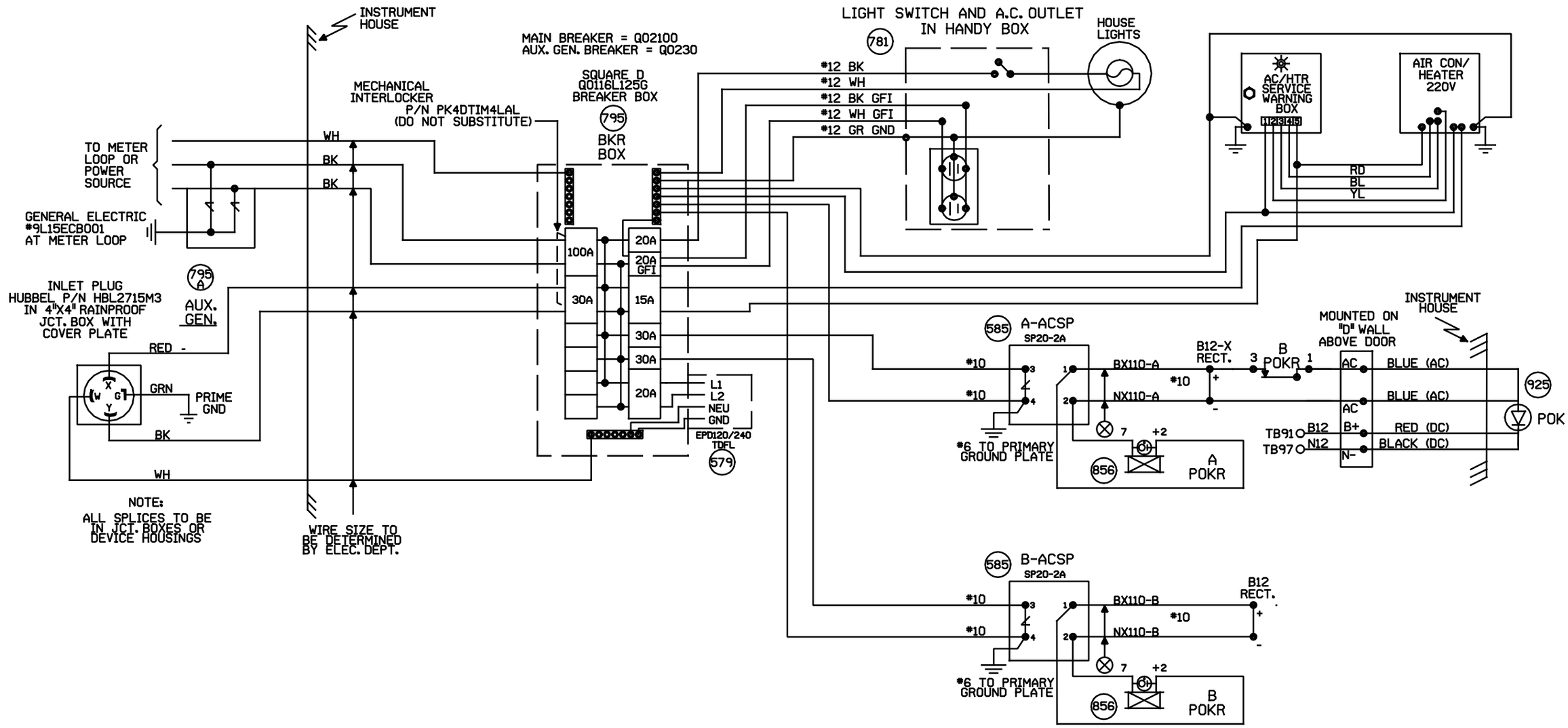

NEW SHEET

Designed 02/11/10	MODIFICATION LEVEL		UNION PACIFIC	Date: 02/11/10
CHICAGO CREATE PROJECT - B2 25TH AVENUE	Q. A. LAST LEVEL CHECKED	DR	QUALITY PRODUCTIVITY SAFETY	Des: RC
Rec#: WO#: 89794	LAST LEVEL MOD THIS TYPICAL	DR		Chk: JJL
IS: / JJL / RC/MDF	LAST LEVEL BY DESIGNER	DS	SIGNAL DESIGN	AFE: 89794
	CHANGED FROM TYPICAL?	Y		
	REV 02.01.09 4K SEARAC.2			

UNION PACIFIC RAILROAD

CHICAGO, ILLINOIS
25TH. AVENUE
GENEVA SUBDIVISION

Office of Sr AVP Engineering - Signal/TCO Omaha, Nebraska

Sh.:	2
DOT	174 010L
MP:	11.73
ID:	GEN1173.2X

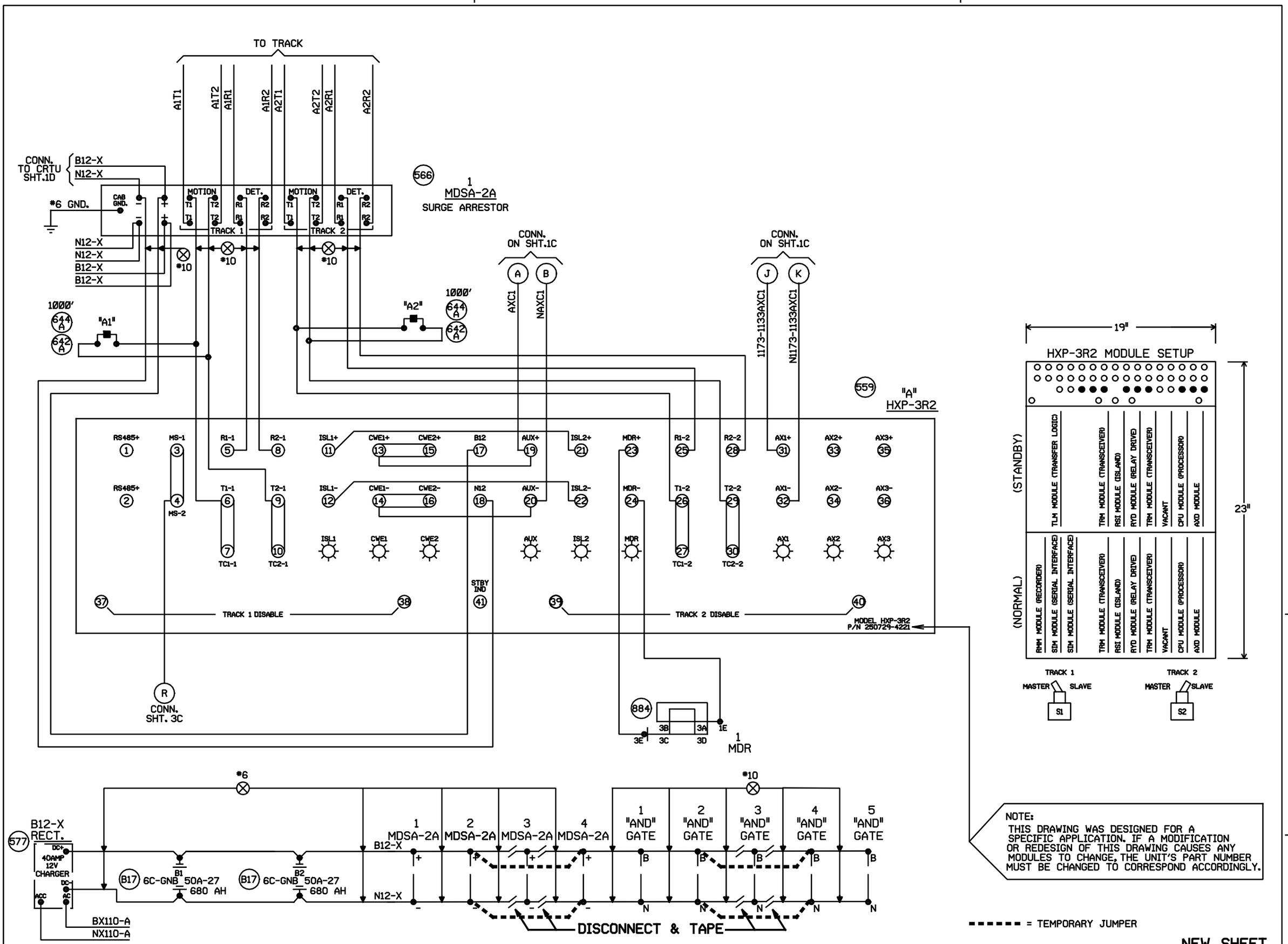

NEW SHEET

Designed 02/11/10	MODIFICATION LEVEL		
CHICAGO CREATE PROJECT - B2 25TH AVENUE	Q.A. LAST LEVEL CHK'D.	DD	
Rec#: WO#: 89794	LAST LEVEL MOD. THIS TYP.	DB	
IS: /JJL	LAST LEVEL BY DESIGNER.	DS	
/ RC/MDF	CHANGED FROM TYP.? Y/N	Y	

UNION PACIFIC — QUALITY PRODUCTIVITY SAFETY — SIGNAL DESIGN

Date: 02/11/10
Des: RC
Chk: JJL
AFE: 89794

UNION PACIFIC RAILROAD
CHICAGO, ILLINOIS
25TH. AVENUE
GENEVA SUBDIVISION
Office of Sr AVP Engineering - Signal/TCO Omaha, Nebraska

Sh.: 3
DOT 174 010L
MP: 11.73
ID: GEN1173.3X

(REV. 01.02.21) (HX32TKUG.4)

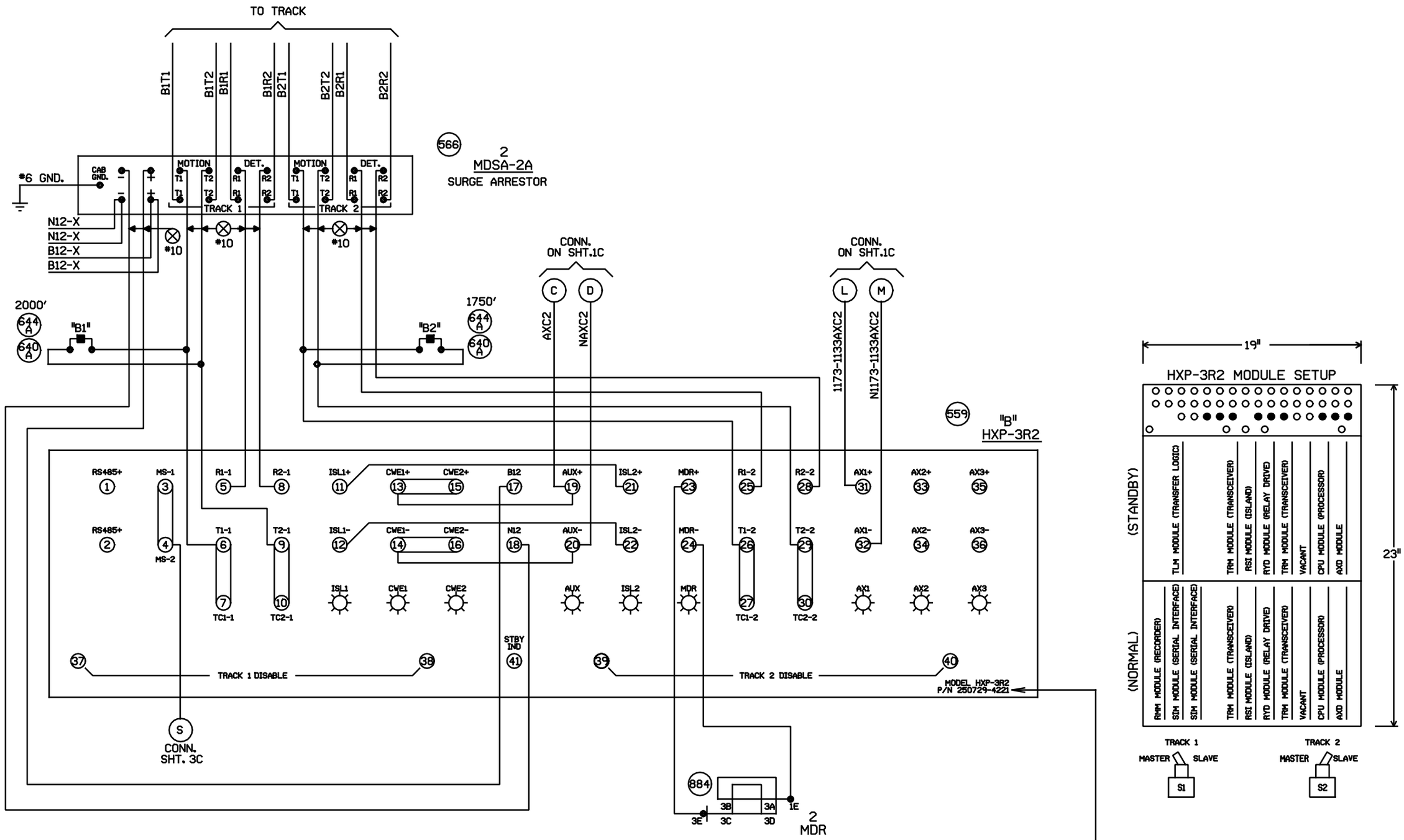

PROGRAM NOTE:
SET PJ-DET ON "AX1" TK. 2 = 7 SEC.

NOTE:
THIS DRAWING WAS DESIGNED FOR A SPECIFIC APPLICATION. IF A MODIFICATION OR REDESIGN OF THIS DRAWING CAUSES ANY MODULES TO CHANGE, THE UNIT'S PART NUMBER MUST BE CHANGED TO CORRESPOND ACCORDINGLY.

NEW SHEET

Designed 02/11/10
CHICAGO CREATE PROJECT - B2 25TH AVENUE
Rec#: WO#: 89794
IS: / /JJL / RC/MDF

MODIFICATION LEVEL	
Q.A. LAST LEVEL CHK'D.	DD
LAST LEVEL MOD. THIS TYP.	DB
LAST LEVEL BY DESIGNER.	DS
CHANGED FROM TYP.? Y/N	Y

UNION PACIFIC
QUALITY PRODUCTIVITY SAFETY
SIGNAL DESIGN

Date: 02/11/10
Des: RC
Chk: JJL
AFE: 89794

UNION PACIFIC RAILROAD
CHICAGO, ILLINOIS
25TH. AVENUE
GENEVA SUBDIVISION
Office of Sr AVP Engineering - Signal/TCO Omaha, Nebraska

Sh.: 3A
DOT 174 010L
MP: 11.73
ID: GEN1173.3AX

(REV. 01.02.21) (HX32TKUG.5)

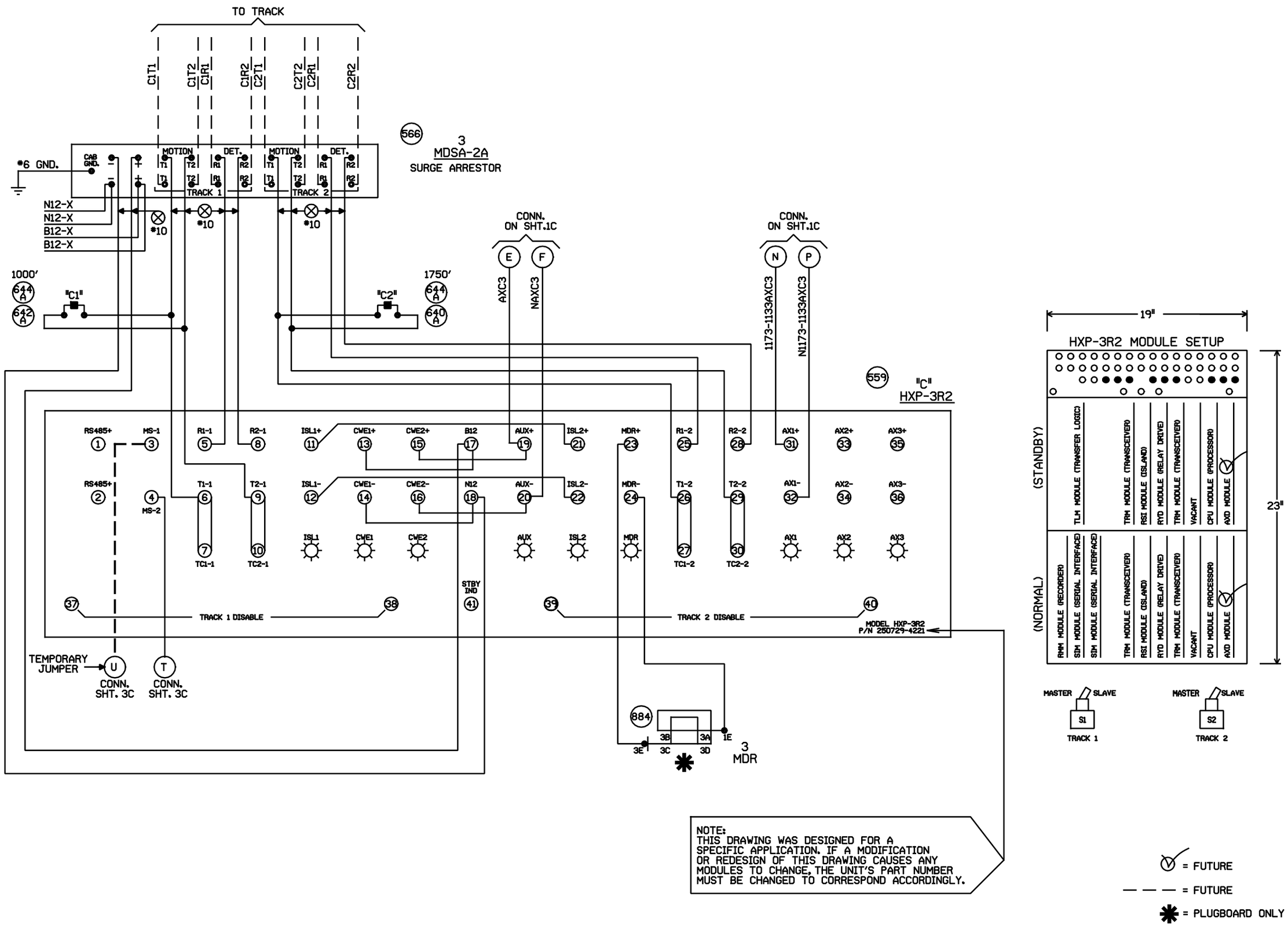

NEW SHEET

Designed 02/11/10	MODIFICATION LEVEL		
CHICAGO CREATE PROJECT - B2 25TH AVENUE	Q.A. LAST LEVEL CHK'D.	DD	
	LAST LEVEL MOD. THIS TYP.	DB	
	LAST LEVEL BY DESIGNER.	DS	
Rec#: WO#: 89794	CHANGED FROM TYP.? Y/N	Y	
IS: /JJL / RC/MDF			

UNION PACIFIC — QUALITY PRODUCTIVITY SAFETY — SIGNAL DESIGN

Date:	02/11/10
Des:	RC
Chk:	JJL
AFE:	89794

UNION PACIFIC RAILROAD

CHICAGO, ILLINOIS
25TH. AVENUE
GENEVA SUBDIVISION

Office of Sr AVP Engineering - Signal/TCO Omaha, Nebraska

Sh.:	3B
DOT	174 010L
MP:	11.73
ID:	GEN1173.3BX

(REV. 01.02.21) (HX32TKUG.5)

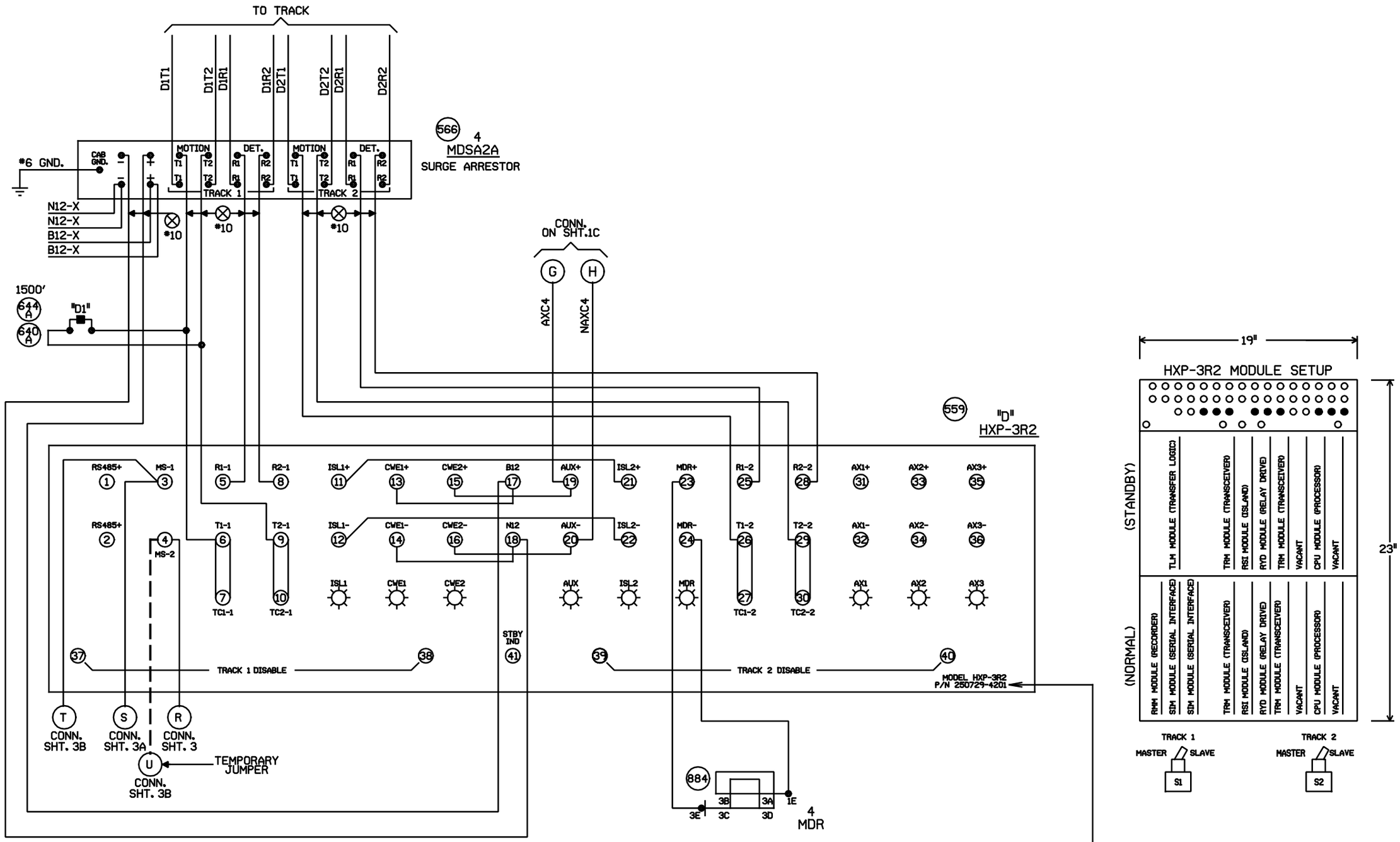

NOTE:
THIS DRAWING WAS DESIGNED FOR A SPECIFIC APPLICATION. IF A MODIFICATION OR REDESIGN OF THIS DRAWING CAUSES ANY MODULES TO CHANGE, THE UNIT'S PART NUMBER MUST BE CHANGED TO CORRESPOND ACCORDINGLY.

PROGRAM NOTE:
SET OPTION 4 TK. 2 TO = "b"

NEW SHEET

Designed 02/11/10	MODIFICATION LEVEL		
CHICAGO CREATE PROJECT - B2 25TH AVENUE	Q.A. LAST LEVEL CHK'D.	DD	
	LAST LEVEL MOD. THIS TYP.	DB	
	LAST LEVEL BY DESIGNER.	DS	
Rec#: WO#: 89794	CHANGED FROM TYP.? Y/N	Y	
IS: /JJL / RC/MDF			

UNION PACIFIC
QUALITY PRODUCTIVITY SAFETY
SIGNAL DESIGN

Date: 02/11/10
Des: RC
Chk: JJL
AFE: 89794

UNION PACIFIC RAILROAD
CHICAGO, ILLINOIS
25TH. AVENUE
GENEVA SUBDIVISION
Office of Sr AVP Engineering - Signal/TCO Omaha, Nebraska

Sh.: 3C
DOT 174 010L
MP: 11.73
ID: GEN1173.3CX

(REV. 01.02.21) (HX32TKUG.5)

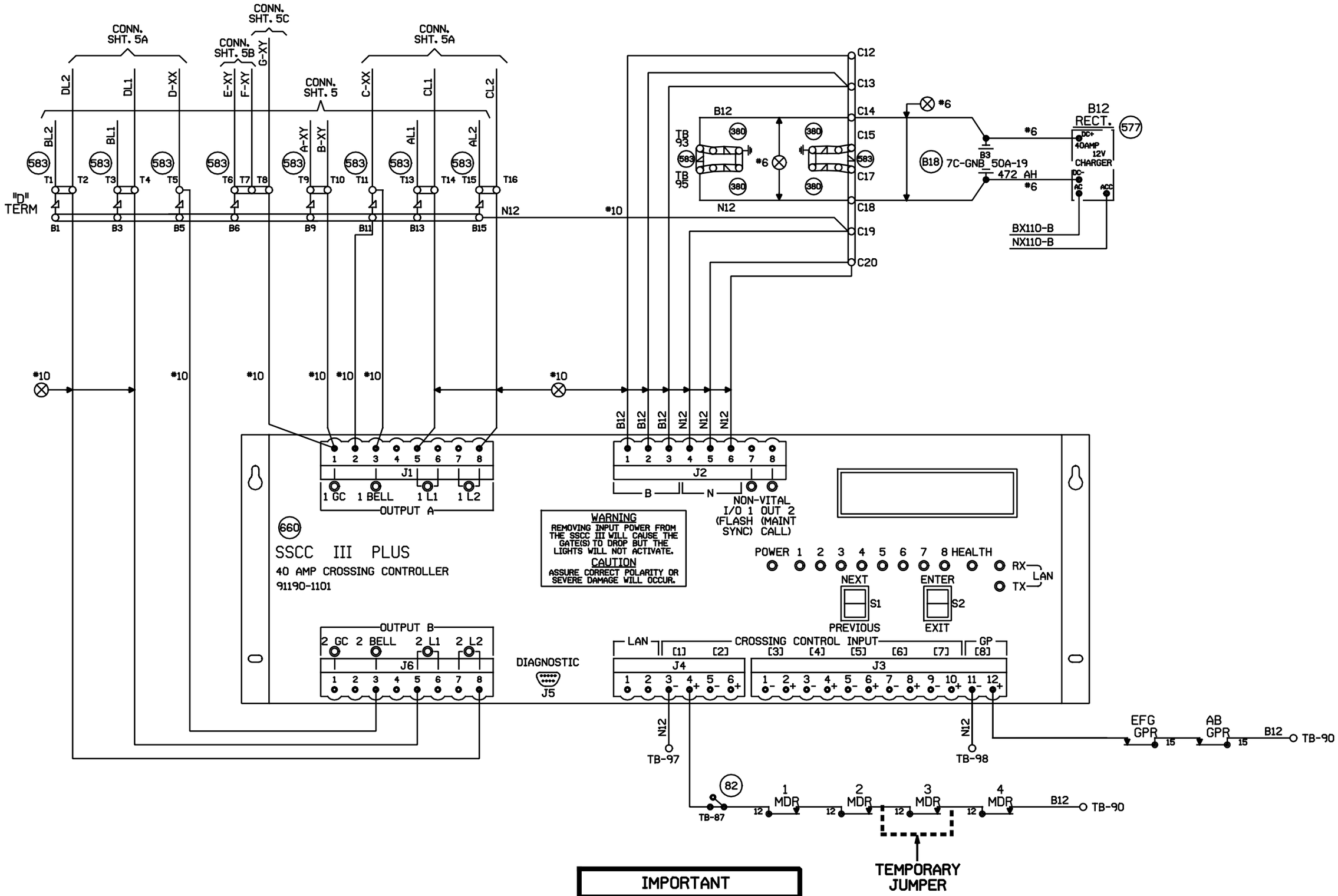

IMPORTANT

THE PROGRAM MCF AND ID LISTED BELOW MUST BE ENTERED IN THE PROGRAM SETUP ROUTINE FOR THIS SOLID STATE CROSSING CONTROLLER TO FUNCTION PROPERLY.

PROGRAM MCF: BASICPLS
PROGRAM ID: 087

EXTERNAL CROSSING CONTROLLER PROGRAM NOTE:

*1) PROGRAM INPUT 2-7 TO DISABLED

NEW SHEET

Designed 02/11/10
CHICAGO CREATE PROJECT - B2 25TH AVENUE
Rec*: WO*: 89794
IS: /JJL
/ / RC/MDF

MODIFICATION LEVEL	
Q.A. LAST LEVEL CHK'D.	DH
LAST LEVEL MOD. THIS TYP.	DH
LAST LEVEL BY DESIGNER.	DS
CHANGED FROM TYP.? Y/N	Y

UNION PACIFIC
QUALITY PRODUCTIVITY SAFETY
SIGNAL DESIGN

Date:	02/11/10
Des:	RC
Chk:	JJL
AFE:	89794

UNION PACIFIC RAILROAD
CHICAGO, ILLINOIS
25TH. AVENUE
GENEVA SUBDIVISION
Office of Sr AVP Engineering - Signal/TCO Omaha, Nebraska

Sh.:	4
DOT	174 010L
MP:	11.73
ID:	GEN1173.4X

(REV. 01.01.04) (SSCCGF.5)

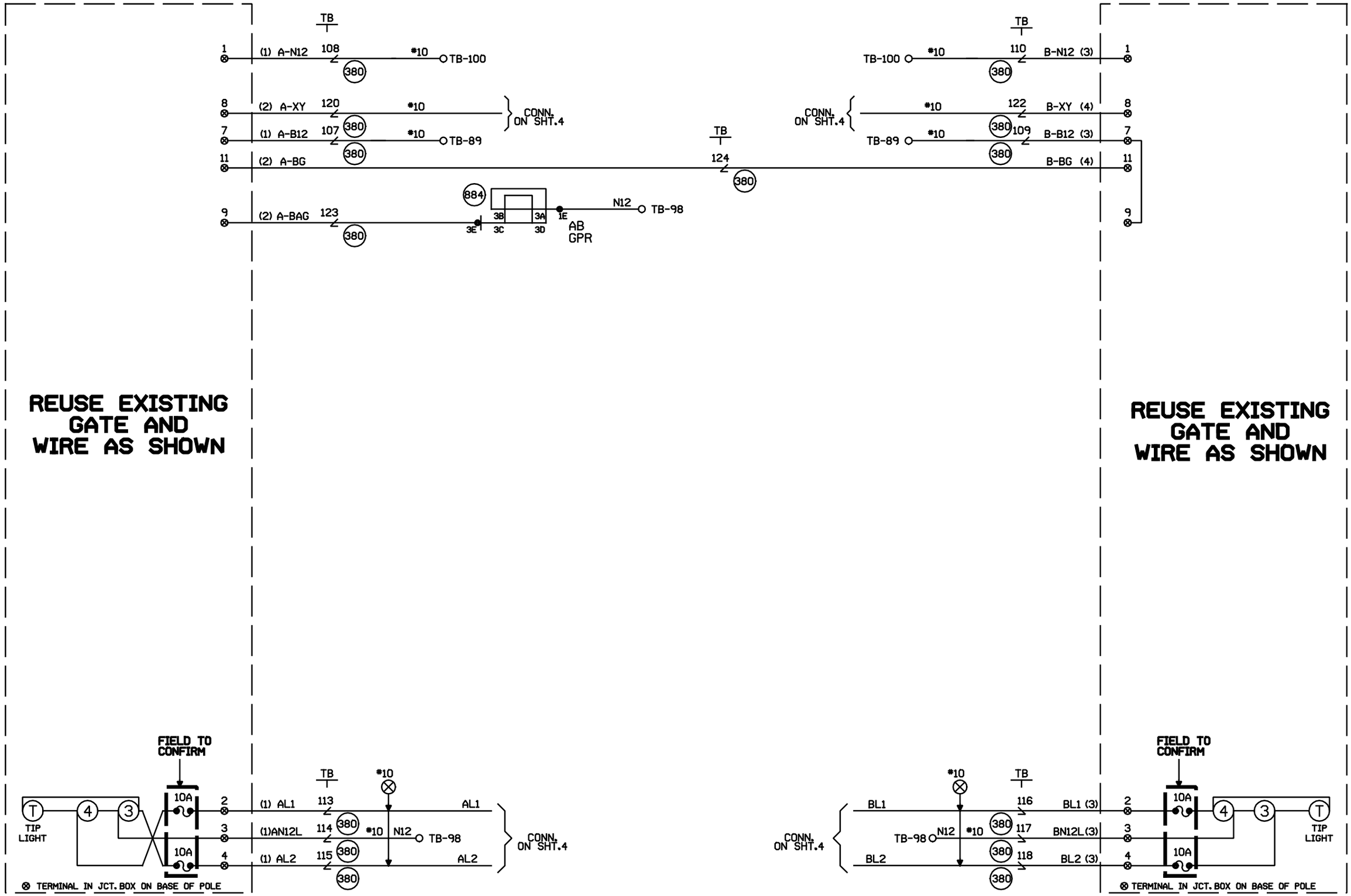

CABLE TABULATION

CABLE NO. 1 5C. NO.6 U.G.B.T.
CABLE NO. 2 7C. NO.14 U.G.B.T.
CABLE NO. 3 5C. NO.6 U.G.B.T.
CABLE NO. 4 7C. NO.14 U.G.B.T.

NEW SHEET

Designed 02/11/10
CHICAGO CREATE PROJECT - B2 25TH AVENUE
Rec#: WO#: 89794
IS: /JJL
/ / RC/MDF

MODIFICATION LEVEL	
Q. A. LAST LEVEL CHECKED	DQ
LAST LEVEL MOD THIS TYPICAL	DQ
LAST LEVEL BY DESIGNER	DS
CHANGED FROM TYPICAL?	Y

REV 02.01.08 4K GFCTYP.5

UNION PACIFIC
QUALITY PRODUCTIVITY SAFETY
SIGNAL DESIGN

Date: 02/11/10
Des: RC
Chk: JJL
AFE: 89794

UNION PACIFIC RAILROAD
CHICAGO, ILLINOIS
25TH. AVENUE
GENEVA SUBDIVISION
Office of Sr AVP Engineering - Signal/TCO Omaha, Nebraska

Sh.: 5
DOT 174 010L
MP: 11.73
ID: GEN1173.5X

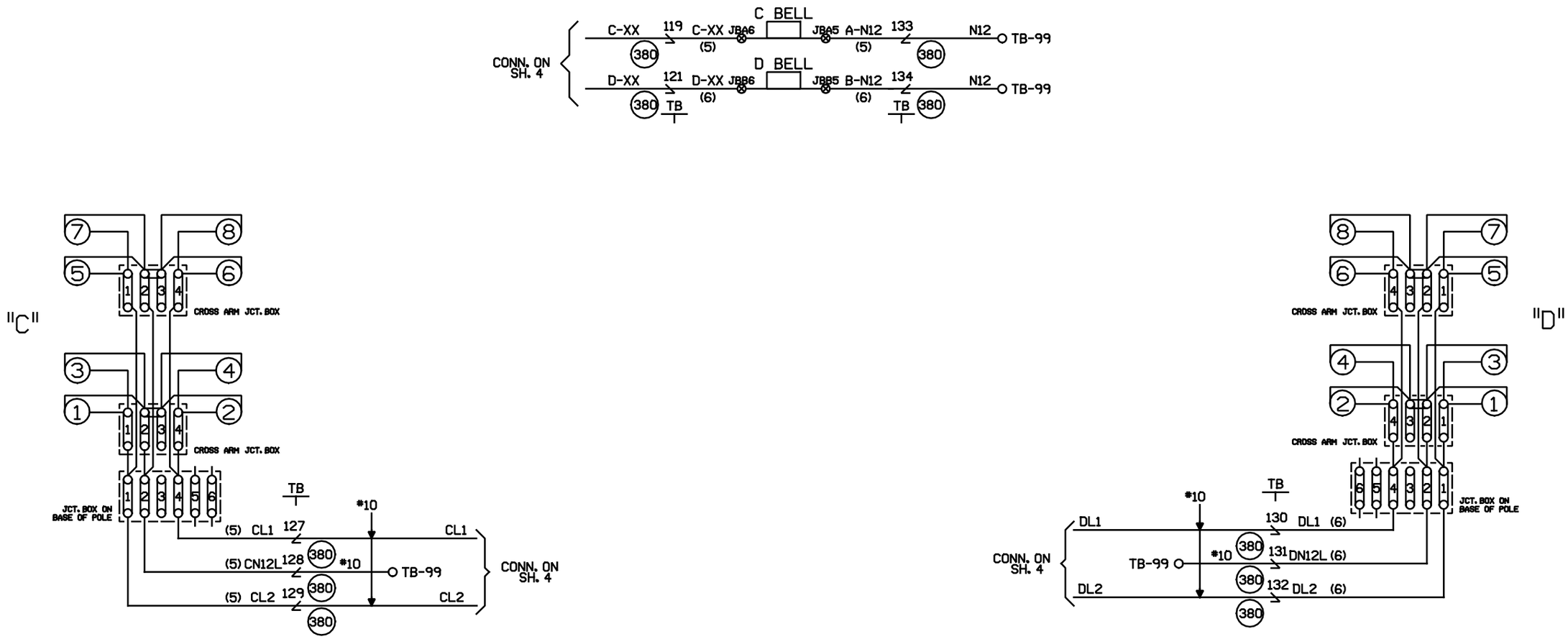

CABLE TABULATION

CABLE NO. 5 5C. NO. 6 U.G.B.T.
CABLE NO. 6 5C. NO. 6 U.G.B.T.

NEW SHEET

					Designed 02/11/10 CHICAGO CREATE PROJECT - B2 25TH AVENUE Rec#: WO#: 89794 IS: /JJL / / RC/MDF	MODIFICATION LEVEL Q. A. LAST LEVEL CHECKED DQ LAST LEVEL MOD THIS TYPICAL DQ LAST LEVEL BY DESIGNER DS CHANGED FROM TYPICAL? Y REV 02.01.08 4K CGTYP.6	UNION PACIFIC QUALITY PRODUCTIVITY SAFETY SIGNAL DESIGN	Date: 02/11/10 Des: RC Chk: JJL AFE: 89794	UNION PACIFIC RAILROAD CHICAGO, ILLINOIS 25TH. AVENUE GENEVA SUBDIVISION Office of Sr AVP Engineering - Signal/TCO Omaha, Nebraska	Sh.: 5A DOT 174 010L MP: 11.73 ID: GEN1173.5AX

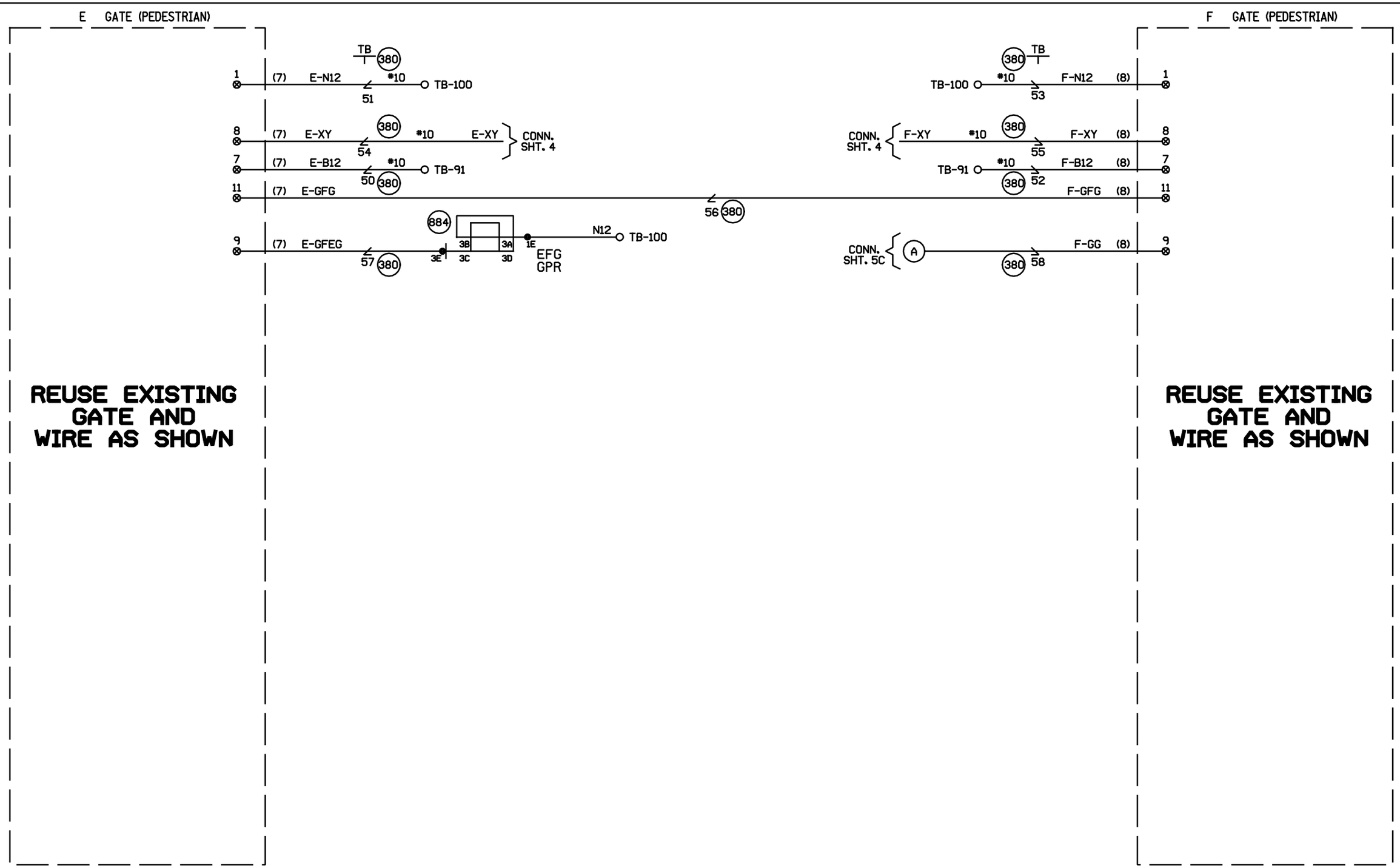

CABLE TABULATION

CABLE NO. 7 5C. NO.6 U.G.B.T.
CABLE NO. 8 5C. NO.6 U.G.B.T.
CABLE NO. 9 5C. NO.6 U.G.B.T.

CABLE NO.11 12C. NO.14 U.G.B.T. HOUSE TO M.P.11.73
CABLE NO.12 12C. NO.14 U.G.B.T. HOUSE TO M.P.12.12
CABLE NO.13 7C. NO.14 U.G.B.T. HOUSE TO M.P.11.62
CABLE NO.14 7C. NO.14 U.G.B.T. HOUSE TO M.P.11.62

NEW SHEET

Designed 02/11/10
CHICAGO CREATE PROJECT - B2 25TH AVENUE
Req#: WO#: 89794
IS: /JJL
/ / RC/MDF

MODIFICATION LEVEL	
Q. A. LAST LEVEL CHECKED	DQ
LAST LEVEL MOD THIS TYPICAL	DQ
LAST LEVEL BY DESIGNER	DS
CHANGED FROM TYPICAL?	Y

REV 02.01.08 4K 4GFTYP.6

UNION PACIFIC
QUALITY PRODUCTIVITY SAFETY
SIGNAL DESIGN

Date: 02/11/10
Des: RC
Chk: JJL
AFE: 89794

UNION PACIFIC RAILROAD
CHICAGO, ILLINOIS
25TH. AVENUE
GENEVA SUBDIVISION
Office of Sr AVP Engineering - Signal/TCO Omaha, Nebraska

Sh.: 5B
DOT 174 010L
MP: 11.73
ID: GEN1173.5BX

G GATE (PEDESTRIAN)

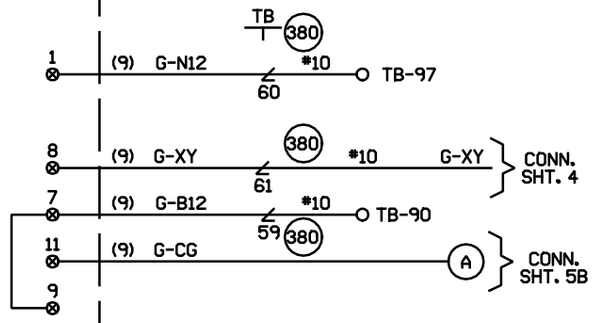

REUSE EXISTING GATE AND WIRE AS SHOWN

NEW SHEET

Designed 02/11/10	MODIFICATION LEVEL		
CHICAGO CREATE PROJECT - B2 25TH AVENUE	Q. A. LAST LEVEL CHECKED	DQ	
	LAST LEVEL MOD THIS TYPICAL	DQ	
Rec#: WO#: 89794	LAST LEVEL BY DESIGNER	DS	
IS: /JJL / / RC/MDF	CHANGED FROM TYPICAL?	Y	
	REV 02.01.08 4K 4GFTYP.6		

UNION PACIFIC
QUALITY PRODUCTIVITY SAFETY
SIGNAL DESIGN

Date: 02/11/10
Des: RC
Chk: JJL
AFE: 89794

UNION PACIFIC RAILROAD
CHICAGO, ILLINOIS
25TH. AVENUE
GENEVA SUBDIVISION
Office of Sr AVP Engineering - Signal/TCO Omaha, Nebraska

Sh.: 5C
DOT 174 010L
MP: 11.73
ID: GEN1173.5CX

WCH 3597

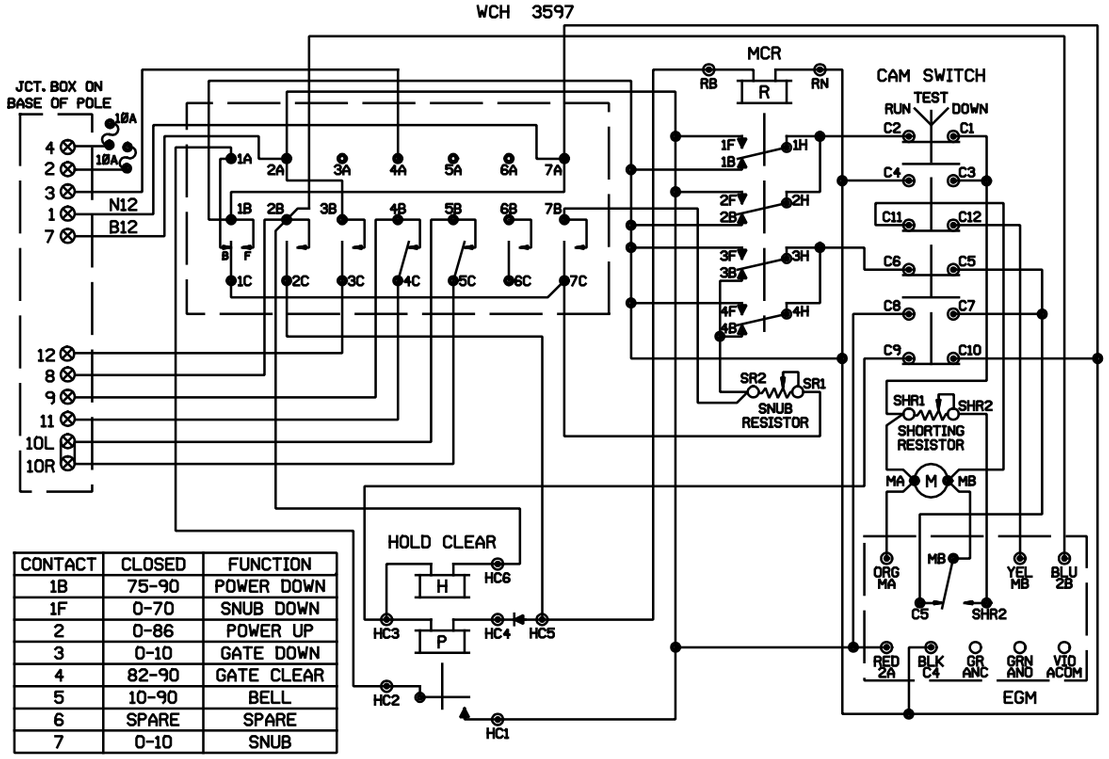

CONTACT	CLOSED	FUNCTION
1B	75-90	POWER DOWN
1F	0-70	SNUB DOWN
2	0-86	POWER UP
3	0-10	GATE DOWN
4	82-90	GATE CLEAR
5	10-90	BELL
6	SPARE	SPARE
7	0-10	SNUB

WCH 3597-RB

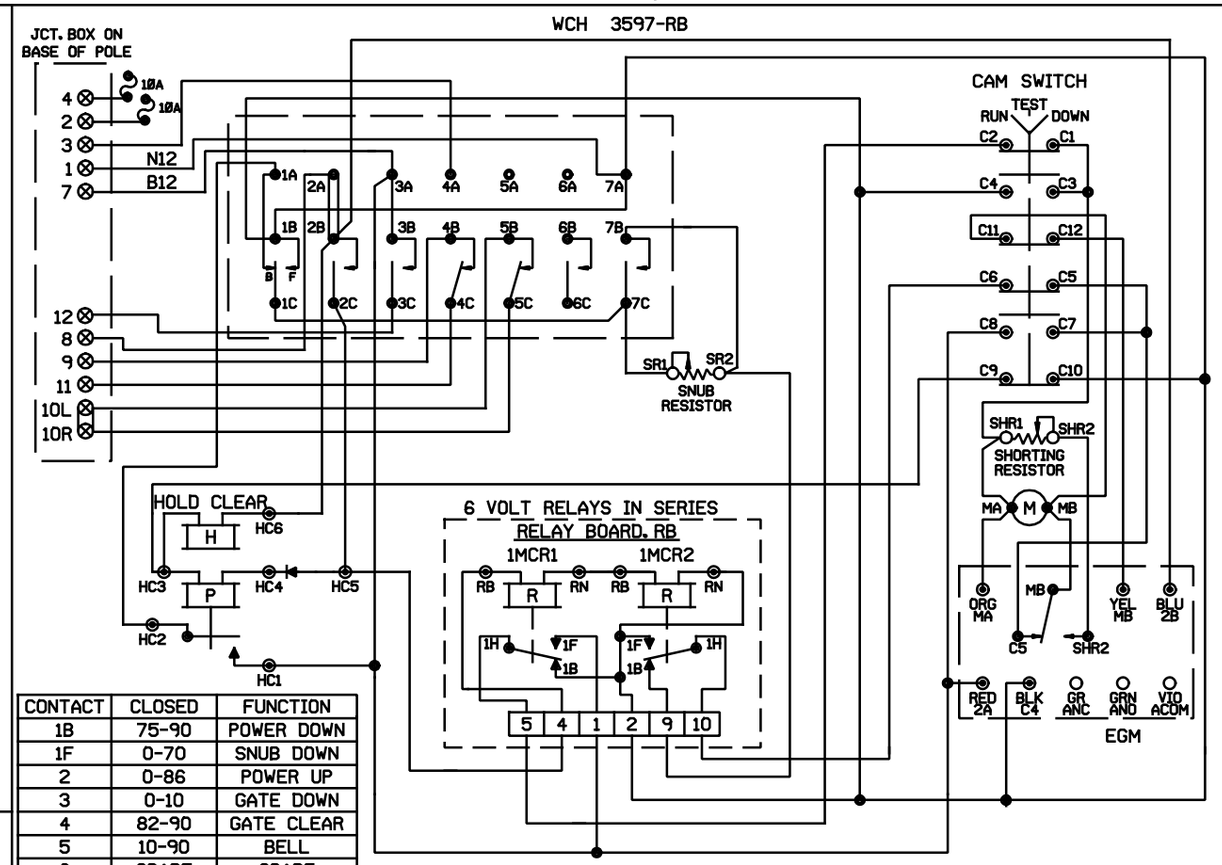

CONTACT	CLOSED	FUNCTION
1B	75-90	POWER DOWN
1F	0-70	SNUB DOWN
2	0-86	POWER UP
3	0-10	GATE DOWN
4	82-90	GATE CLEAR
5	10-90	BELL
6	SPARE	SPARE
7	0-10	SNUB

WCH 3593-E

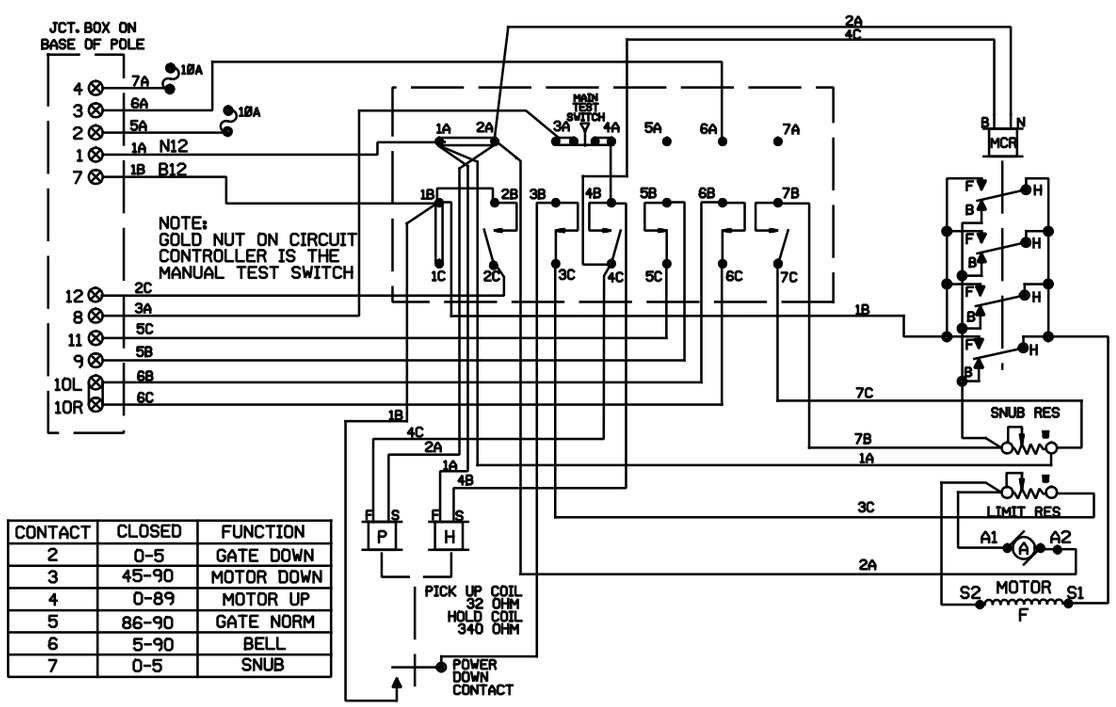

CONTACT	CLOSED	FUNCTION
2	0-5	GATE DOWN
3	45-90	MOTOR DOWN
4	0-89	MOTOR UP
5	86-90	GATE NORM
6	5-90	BELL
7	0-5	SNUB

WCH 3597-E

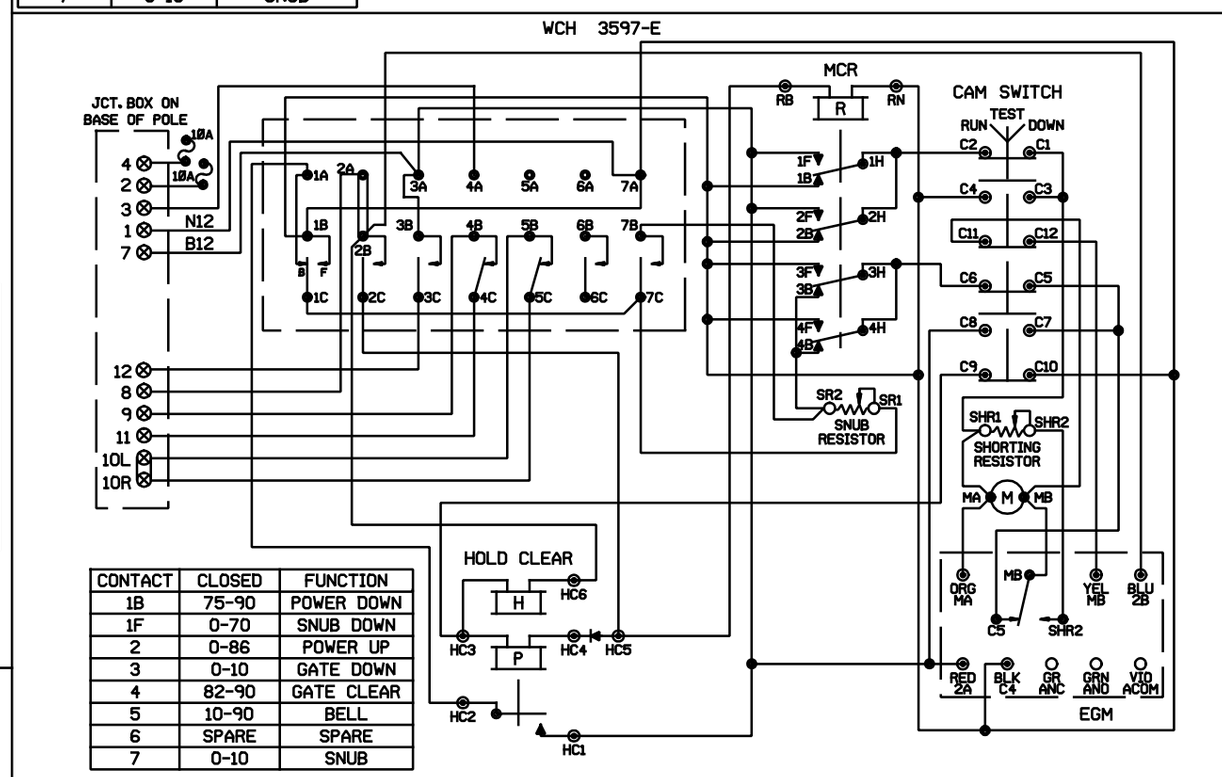

CONTACT	CLOSED	FUNCTION
1B	75-90	POWER DOWN
1F	0-70	SNUB DOWN
2	0-86	POWER UP
3	0-10	GATE DOWN
4	82-90	GATE CLEAR
5	10-90	BELL
6	SPARE	SPARE
7	0-10	SNUB

SHOW TYPE MECH. INSTALLED

ALL MECHANISMS SHOWN IN THE CLEAR POSITION

JCT. BOX ON BASE POLE

L	R	L	R
1		7	
2		8	
3		9	
4		10	
5		11	
6		12	

NEW SHEET

Designed 02/11/10
CHICAGO CREATE PROJECT - B2 25TH AVENUE
Rec#: WO#: 89794
IS: /JJL / / RC/MDF

MODIFICATION LEVEL	
Q. A. LAST LEVEL CHECKED	DQ
LAST LEVEL MOD THIS TYPICAL	DQ
LAST LEVEL BY DESIGNER	DS
CHANGED FROM TYPICAL?	N

REV 02.01.08 4K GWIRING.DGN

UNION PACIFIC — QUALITY PRODUCTIVITY SAFETY — SIGNAL DESIGN

Date: 02/11/10
Des: RC
Chk: JJL
AFE: 89794

UNION PACIFIC RAILROAD
CHICAGO, ILLINOIS
25TH. AVENUE
GENEVA SUBDIVISION
Office of Sr AVP Engineering - Signal/TCO Omaha, Nebraska

Sh.: 6
DOT 174 010L
MP: 11.73
ID: GEN1173.6X

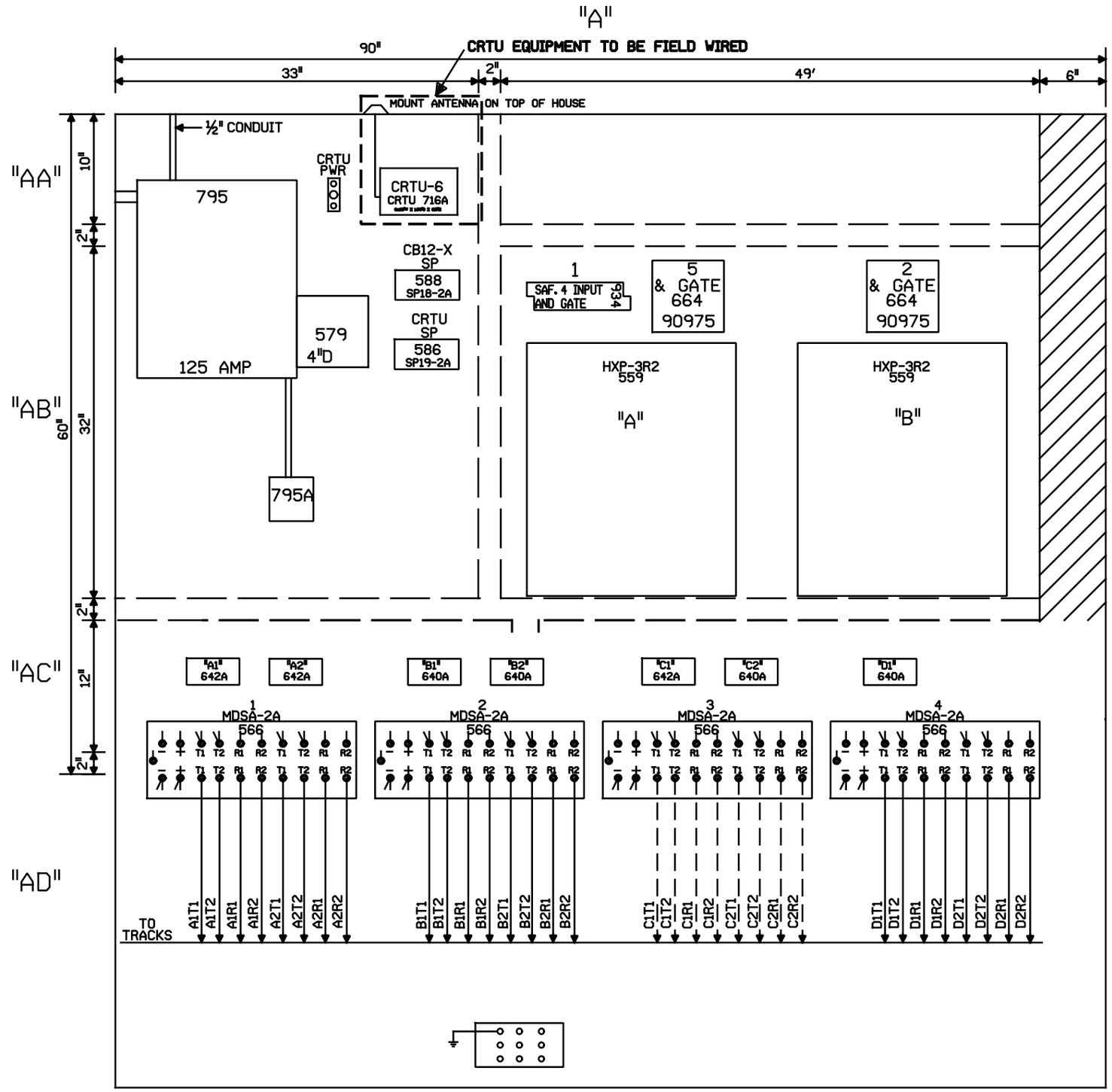

NOTE: ALL DIMENSIONS SHOWN ARE APPROXIMATE.

0 1 2 3 4 FEET

SCALE: 1.5 INCHES = 1 FOOT

— — — = FUTURE

NEW SHEET

Designed 02/11/10	MODIFICATION LEVEL		UNION PACIFIC	Date: 02/11/10
CHICAGO CREATE PROJECT - B2 25TH AVENUE	Q. A. LAST LEVEL CHECKED	DR	QUALITY PRODUCTIVITY SAFETY	Dest: RC
Req#: WO#: 89794	LAST LEVEL MOD THIS TYPICAL	DR	SIGNAL DESIGN	Chk: JJL
IS: JJL / / RC/MDE	LAST LEVEL BY DESIGNER	DS		AFE: 89794
	CHANGED FROM TYPICAL?	Y		
	REV 02.01.09 4K 4TKGFC.8			

UNION PACIFIC RAILROAD

CHICAGO, ILLINOIS
25TH. AVENUE
GENEVA SUBDIVISION

Office of Sr AVP Engineering - Signal/TCO Omaha, Nebraska

Sh.:	7
DOT	174 010L
MP:	11.73
ID:	GEN1173.7X

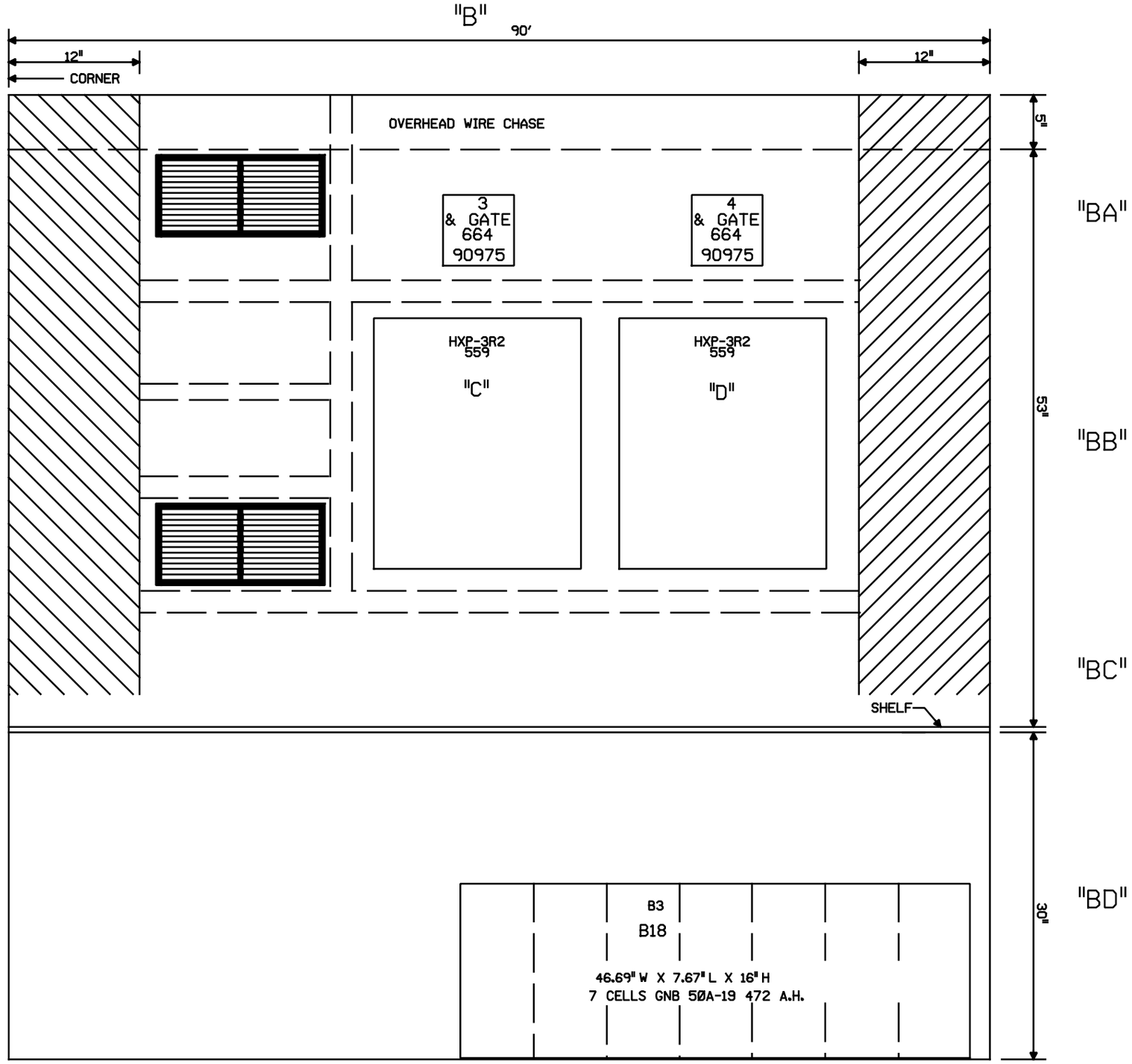

NOTE: ALL DIMENSIONS SHOWN ARE APPROXIMATE.

0 1 2 3 4 FEET

SCALE: 1.5 INCHES = 1 FOOT

NEW SHEET

Designed 02/11/10	MODIFICATION LEVEL		UNION PACIFIC	Date: 02/11/10
CHICAGO CREATE PROJECT - B2 25TH AVENUE	Q. A. LAST LEVEL CHECKED	DR	QUALITY PRODUCTIVITY SAFETY	Des: RC
Rec#: WO#: 89794	LAST LEVEL MOD THIS TYPICAL	DR		Chk: JJL
IS: JJL / / RC/MDF	LAST LEVEL BY DESIGNER	DS	SIGNAL DESIGN	AFE: 89794
	CHANGED FROM TYPICAL?	Y		
	REV 02.01.09 4K 4TKGFC.8			

UNION PACIFIC RAILROAD

CHICAGO, ILLINOIS
25TH. AVENUE
GENEVA SUBDIVISION

Office of Sr AVP Engineering - Signal/TCO Omaha, Nebraska

Sh.:	8
DOT	174 010L
MP:	11.73
ID:	GEN1173.8X

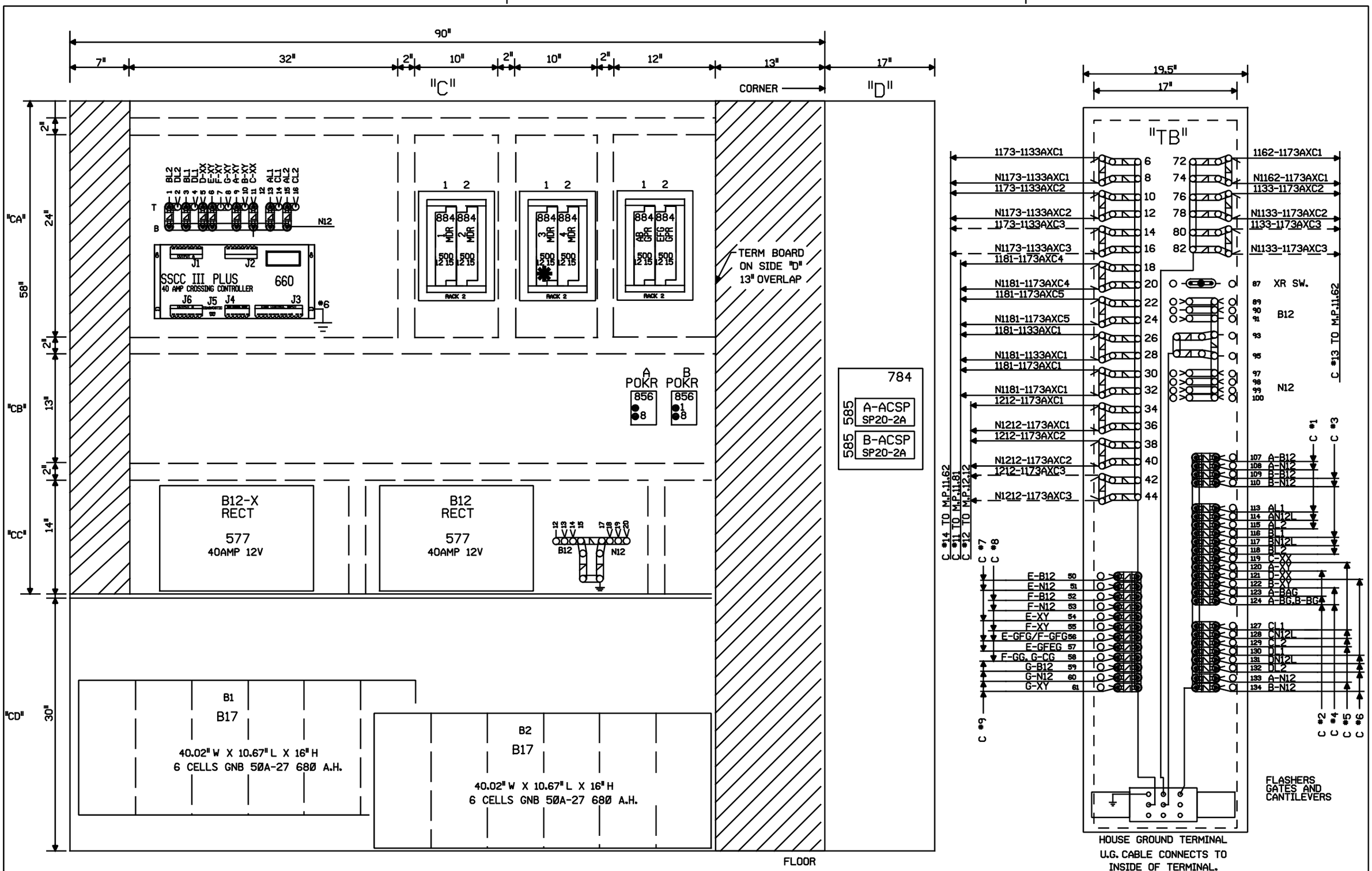

Designed 02/11/10 CHICAGO CREATE PROJECT - B2 25TH AVENUE Rec#: WO#: 89794 IS: /JJL / / RC/MDE	MODIFICATION LEVEL		UNION PACIFIC QUALITY PRODUCTIVITY SAFETY SIGNAL DESIGN	Date: 02/11/10 Des: RC Chk: JJL AFE: 89794	UNION PACIFIC RAILROAD CHICAGO, ILLINOIS 25TH. AVENUE GENEVA SUBDIVISION Office of Sr AVP Engineering - Signal/TCO Omaha, Nebraska	Sh.: 9 DOT 174 010L MP: 11.73 ID: GEN1173.9X
	Q. A. LAST LEVEL CHECKED	DR				
	LAST LEVEL MOD THIS TYPICAL	DR				
	LAST LEVEL BY DESIGNER	DS				
	CHANGED FROM TYPICAL?	Y				
	REV 02.01.09 4K GFC.9					