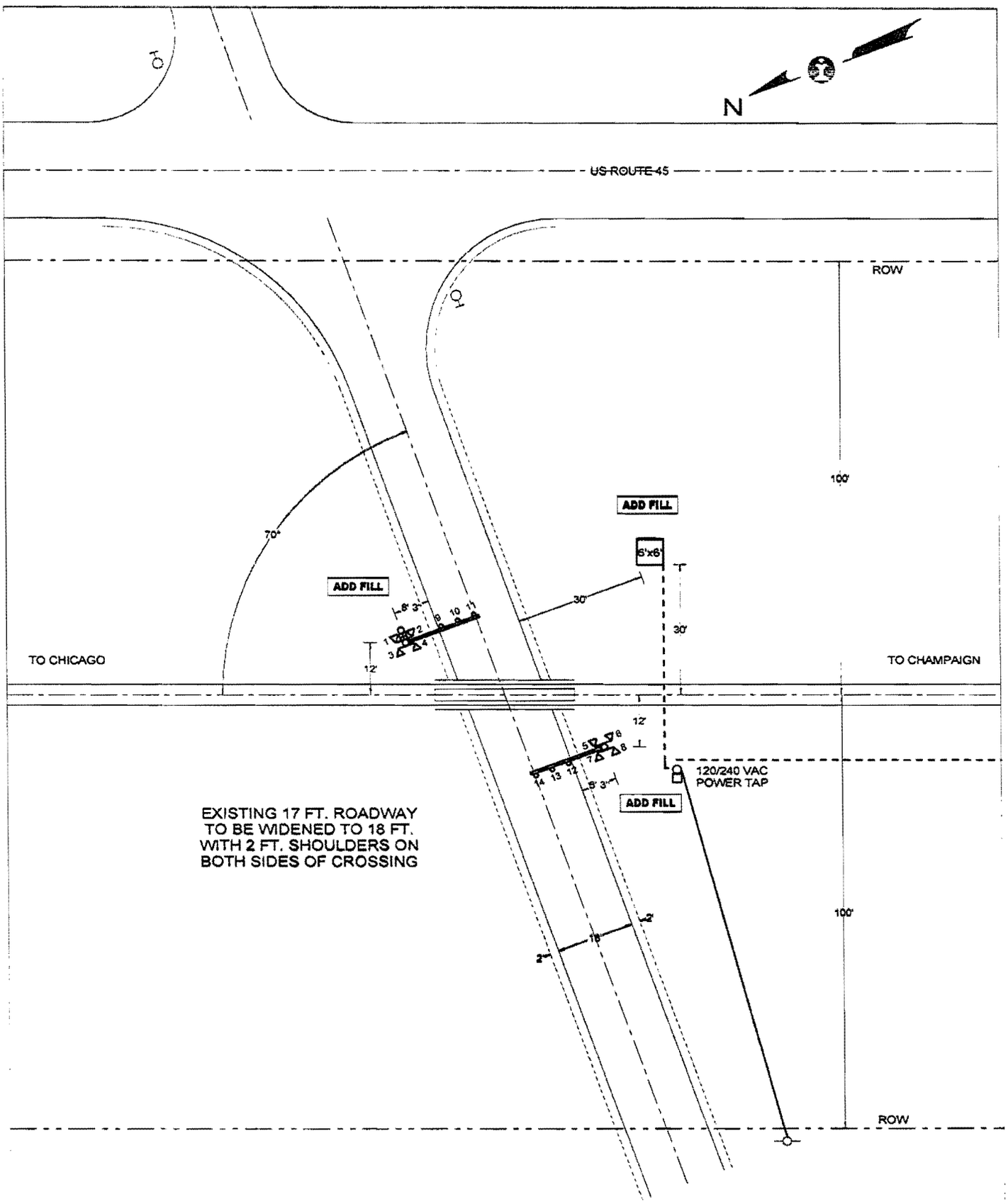

PROPOSED
DEC 17, 2008

RECEIVED
SEP 16 2010
ILLINOIS COMMERCE COMMISSION
RAIL SAFETY SECTION

QUADRANT	NE	SW
STANDARD AFLS	LED	LED
CANTILEVER, FT.	-	-
GATE, FT.	18	18
ADDED LIGHTS	-	-
BARRICADE	-	-
MULTI-TK SIGN	-	-
BELL	X	-
REVISIONS		

CN

SIGNALS & COMMUNICATIONS, ENGINEERING DEPARTMENT

CITY & STATE: ASHKUM, IL	SD 1007 X
CROSSING: 2400N / TR 89	DATE: DEC 17, 2008
IC - 74.85	DOT - 288 978H
MIDWEST DIVISION	CHICAGO SUBDIVISION
IN SERVICE	SCALE: 1"=30'
DRAWN BY: AVS	

E:\DWG\CHI\07485X.CAD

2400N

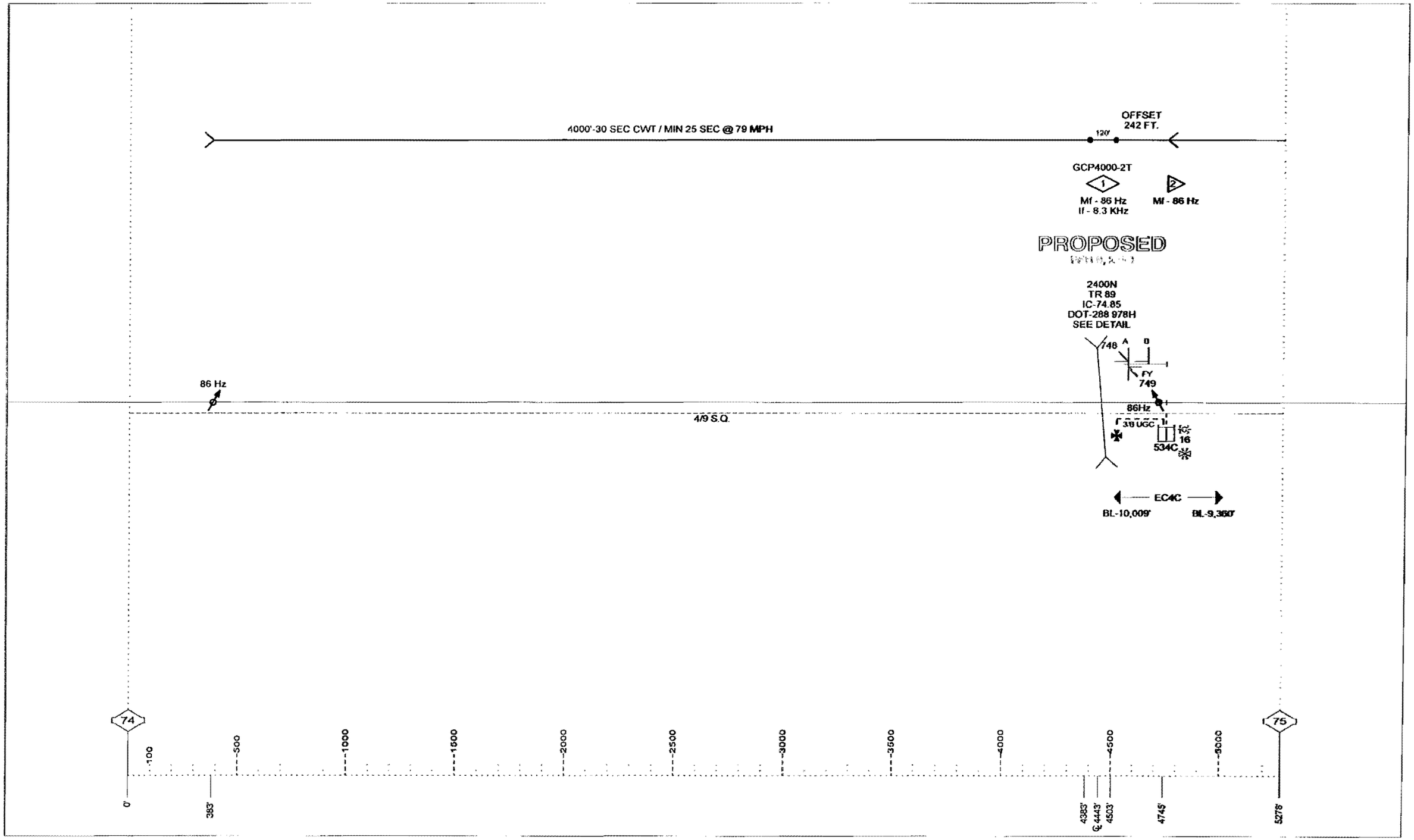
4000'-30 SEC CWT / MIN 25 SEC @ 79 MPH
OFFSET
242 FT.
120'
GCP4000-2T
1
Mf - 86 Hz
If - 8.3 KHz
2
Mf - 86 Hz
PROPOSED
2400N
TR 89
IC-74.85
DOT-288 978H
SEE DETAIL
748
A
B
FY
749
86 Hz
86Hz
4/9 S.Q.
3/8 UGC
16
534C
EC4C
BL-10,009'
BL-9,360'
74
75
0'
100
500
1000
1500
2000
2500
3000
3500
4000
4500
5000
383'
4383'
℄ 4443'
4503'
4745'
5278'
DRAWING SCALE 1" = 500'

SD 1007 - MP 75 TO 76

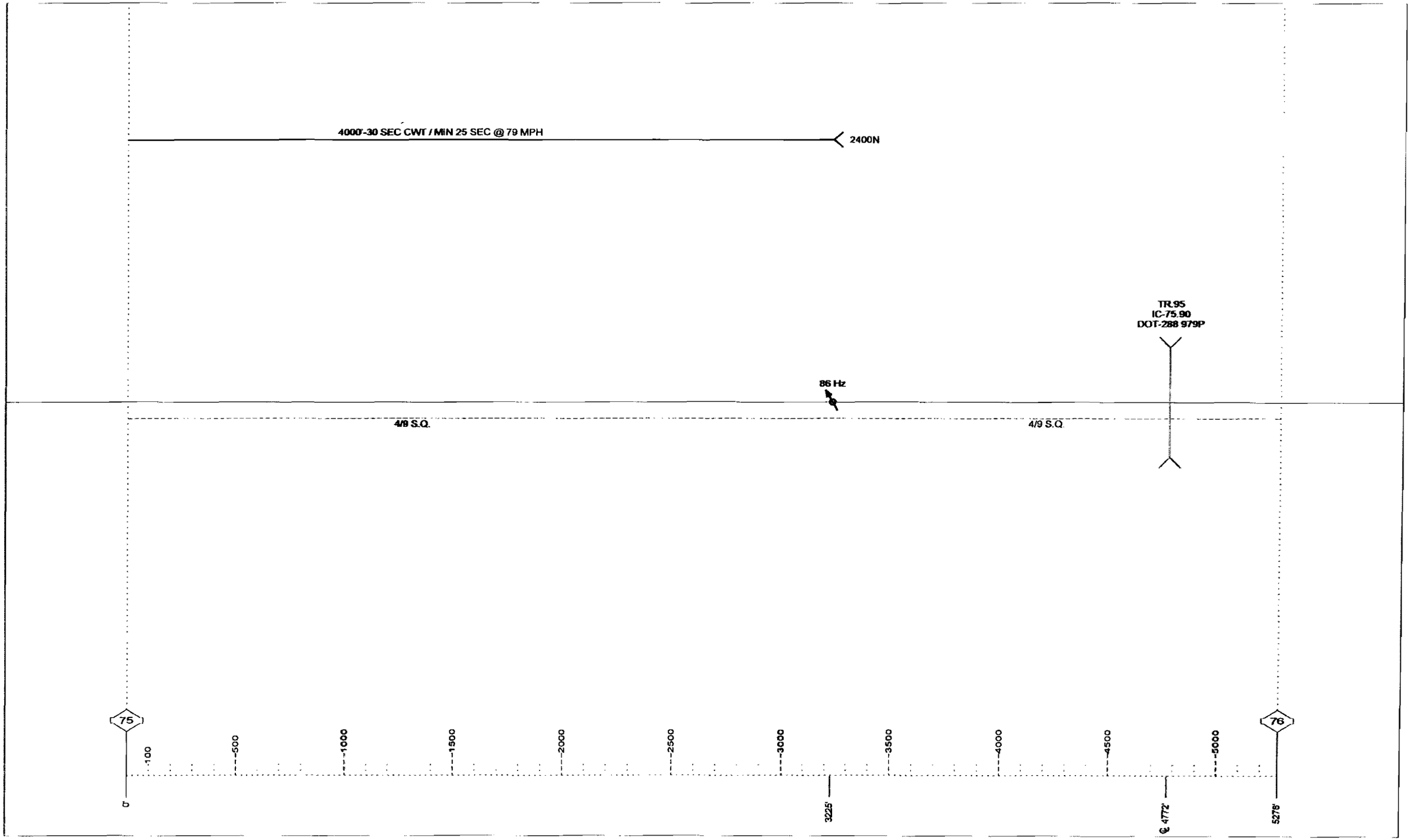

$WATERMARK

REVISIONS				
NO.	DATE	BY	DESCRIPTION	APP. BY
1				
2				
3				
4				
5				

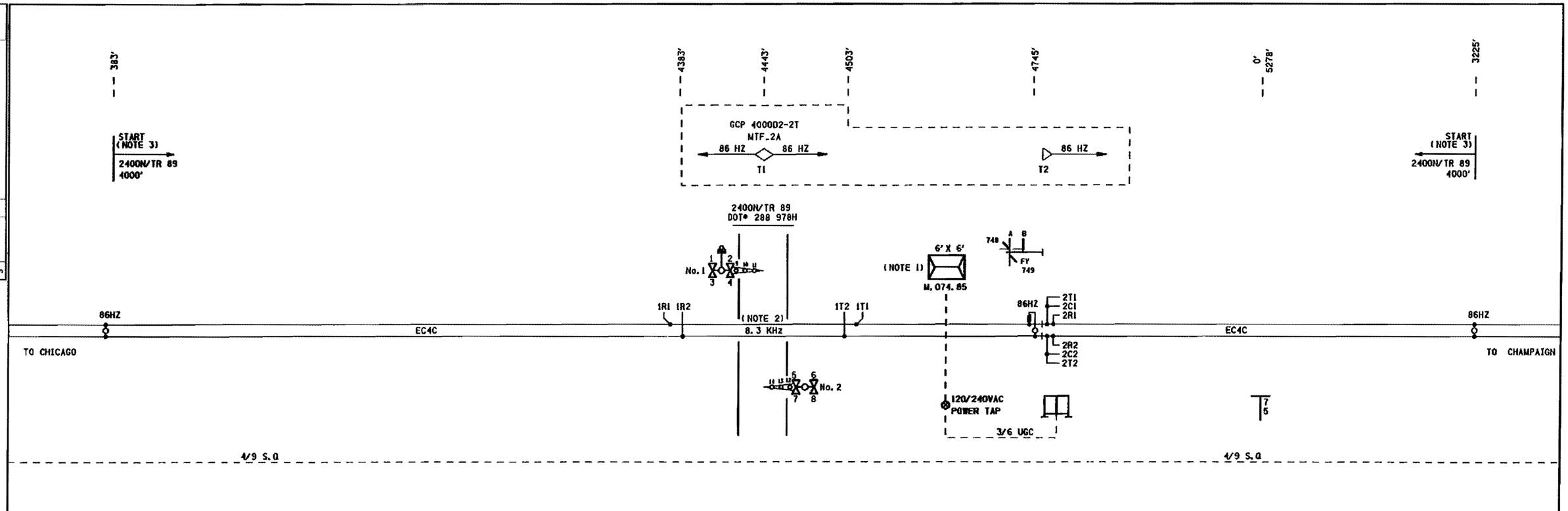

FRONT LIGHTS FOR VEHICLES				
SIG #	LIGHT #	ROUNDEL TYPE	ALIGNMENT POINT FEET	ROAD SPEED MPH
1	1,2	LED 7030		
2	7,8	LED 7030		
BACK LIGHTS FOR VEHICLES				
SIG #	LIGHT #	ROUNDEL TYPE	ALIGNMENT POINT FEET	ROAD SPEED MPH
1	3,4	LED 7030		
2	5,6	LED 7030		

NOTES:

1) BUNGALOW TO BE INSTALLED WITH DOORS FACING TRACK.

2) ISLAND DISTANCE MINIMUM 120 FEET

3) DISTANCE MEASURED FROM TRACK LEADS

4) DENOTES MULTI-FREQ. NARROW BAND SHUNT 62775-8621.

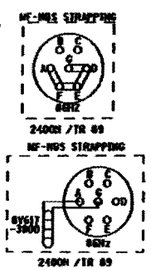

6) DENOTES MULTI-FREQ. NARROW BAND SHUNT 62775-8621 WITH DUMMY TRACK LOAD 8V617-3800.

RECEIVED

SEP 16 2010

ILLINOIS COMMERCE COMMISSION
RAIL SAFETY SECTION

PROPOSED
DES. No. _____
RED-IN YELLOW-OUT
AS INSTALLED
DATE _____
BY _____

6' X 6' BUNGALOW

PROPOSED			REVISIONS	D	C	COMPLETED			C
D	M	Y				D	M	Y	

REGION SOUTHERN
SUB. CHICAGO 340

SIGNALS AND COMMUNICATIONS HOMEWOOD — DES. SP
17 JUNE 2010 — CH. MKN

TRACK LAYOUT
2400N/TR 89
ASHKUM, IL

CHI-074.85-01

15

SAFETRAN SYSTEM CORP.
LOUISVILLE DIVISION, LOUISVILLE, KY

SAFETRAN SYSTEMS CORPORATION

DES.: SP	DATE: 17/06/10	JOB NO.: PICA10235	
CKD.: MKN	ISSUE DATE: N/A	EST. NO.: N/A	
DRN.: SP	PLAN NO.: N/A	SHEET 1 OF 15	
P. TIME: 13:21	P. DATE: 14-SEP-2010	CAD ID.: CHI-074.85-01	

CHI-074.85-01.dgn
14-SEP-2010

$WATERMARK

REVISIONS				
NO.	DATE	BY	DESCRIPTION	APP. BY
1				
2				
3				
4				
5				

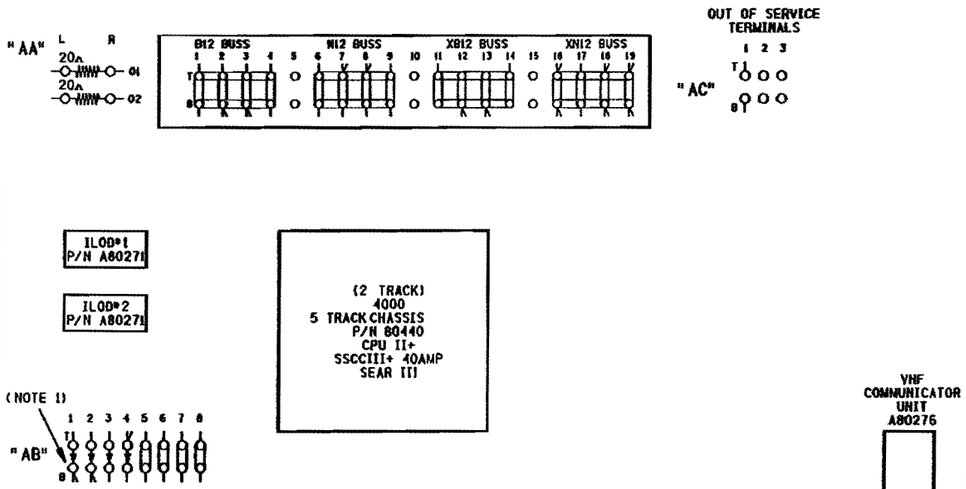

NOTE:
1) -⊣⊢- DENOTES RECTIFIER : (SAFETRAN# 8008A299006)

SIDE "A"

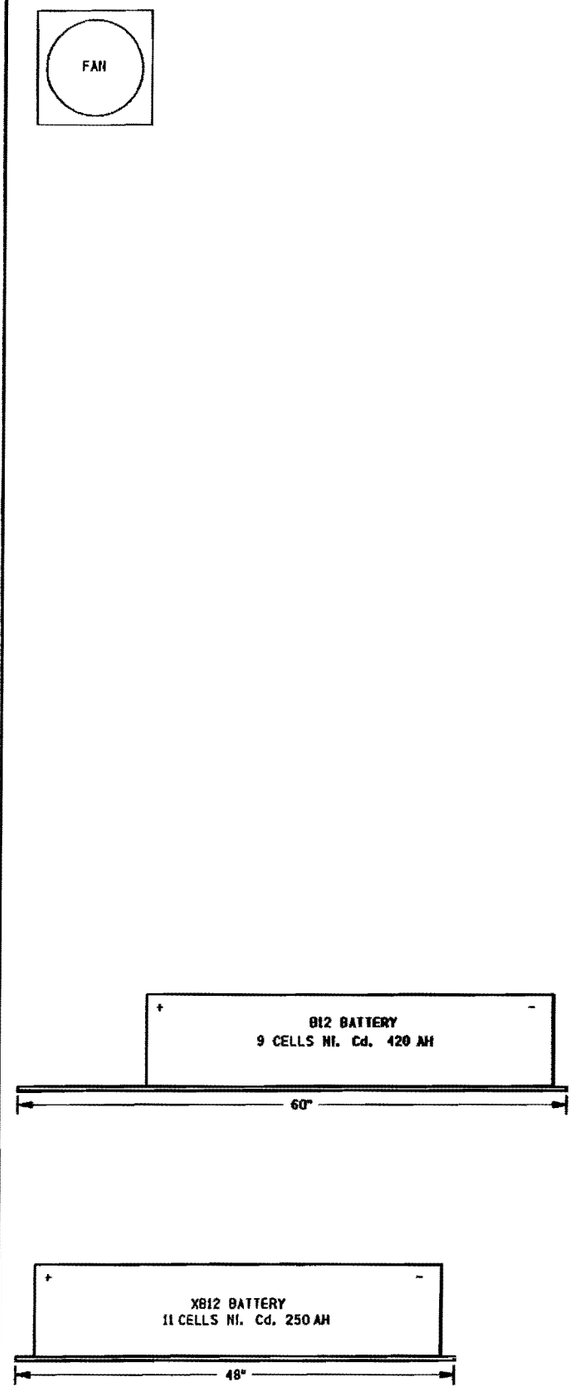

SIDE "B"

PROPOSED
DES. No. _____
RED-IN YELLOW-OUT
AS INSTALLED
DATE _____
BY _____

6' X 6' BUNGALOW

PROPOSED D	M	Y	REVISIONS	D	C	COMPLETED D	M	Y	C

REGION SOUTHERN
SUB. CHICAGO 340
CN

SIGNALS AND COMMUNICATIONS HOMEWOOD | DES. SP
17 JUNE 2010 | CH. MKN

BUNGALOW LAYOUT
SIDE "A" & "B"
2400N/TR 89
ASHKUM, IL

CHI-074.85-02

SAFETRAN SYSTEM CORP.
LOUISVILLE DIVISION, LOUISVILLE, KY

SAFETRAN SYSTEMS CORPORATION

DES. : SP	DATE: 17/06/10	JOB NO. : PICAID235	
CKD. : MKN	ISSUE DATE: N/A	EST. NO. : N/A	
DRN. : SP	PLAN NO. : N/A	SHEET 2 OF 15	
P TIME: 13:21	P DATE: 14-SEP-2010	CAD ID. : CHI-074.85-02	

CHI-074.85-02.dgn
14-SEP-2010

$WATERMARK

REVISIONS				
NO.	DATE	BY	DESCRIPTION	APP. BY
1				
2				
3				
4				
5				

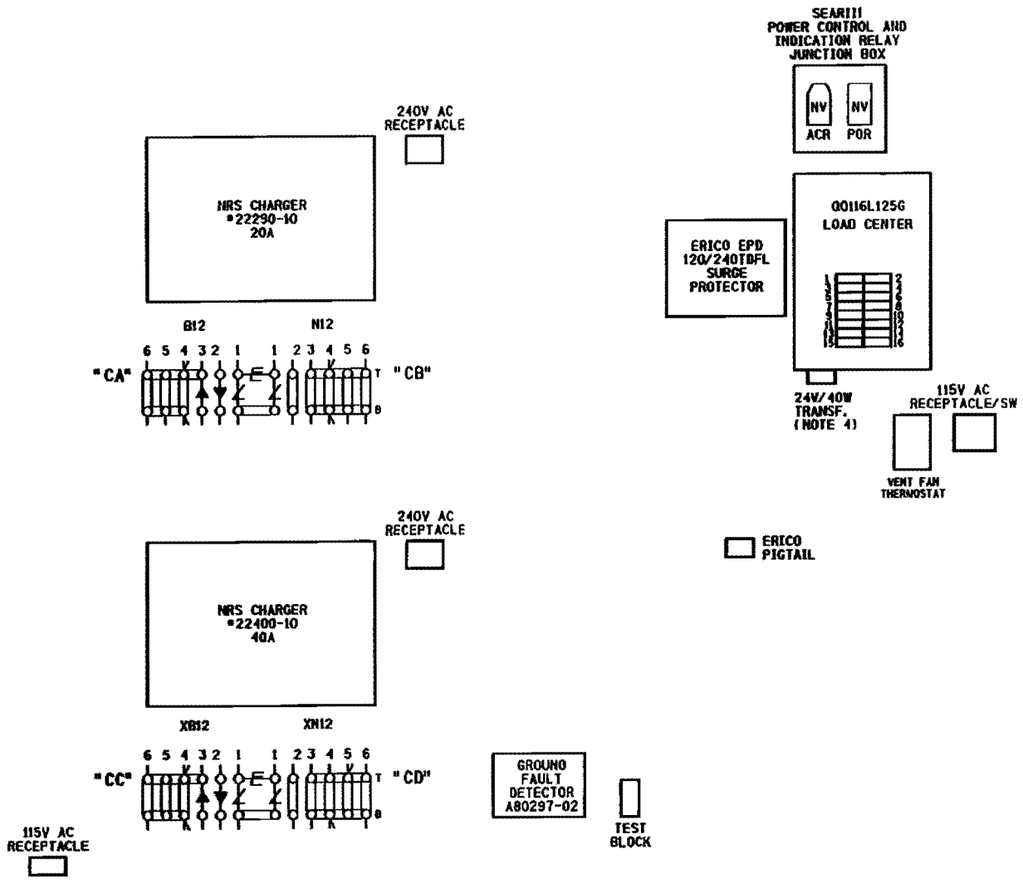

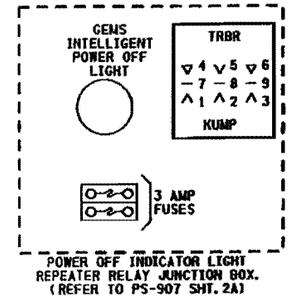

NOTES:

1) # DENOTES EQUALIZER TYPE: (SAFETRAN #44700-001X)
2) DENOTES LIGHTNING ARRESTER TYPE: (SAFETRAN #44585-001X)
3) SURGE PROTECTION SHOULD BE BONDED TO BUNGALOW.
4) 24V-40W TRANSFORMER (CN STOCK #02-45-367)

SIDE" C"

SIDE" D"
ABOVE ENTRY DOOR

CHI-074.85-03.dgn
14-SEP-2010

PROPOSED
DES. No. _____
RED-IN YELLOW-OUT
AS INSTALLED
DATE _____
BY _____

6' X 6' BUNGALOW

PROPOSED D	M	Y	REVISIONS	D	C	COMPLETED D	M	Y	C

REGION SOUTHERN
SUB. CHICAGO 340
CN
SIGNALS AND COMMUNICATIONS HOMEWOOD — DES. SP
17 JUNE 2010 — CH. WKN
BUNGALOW LAYOUT
SIDE "C" & OVER DOOR SIDE "D"
2400N/TR 89
ASHKUM, IL
CHI-074.85-03

SAFETRAN SYSTEM CORP.
LOUISVILLE DIVISION, LOUISVILLE, KY

SAFETRAN SYSTEMS CORPORATION		
DES. : SP	DATE: 17/06/10	JOB NO.: PICA10235
CKD. : WKN	ISSUE DATE: N/A	EST. NO.: N/A
DRN. : SP	PLAN NO.: N/A	SHEET 3 OF 15
P TIME: 13:21	P DATE: 14-SEP-2010	CAD ID.: CHI-074.85-03

$WATERMARK

CHI-074.85-04.dgn
14-SEP-2010

REVISIONS				
NO.	DATE	BY	DESCRIPTION	APP. BY
1				
2				
3				
4				
5				

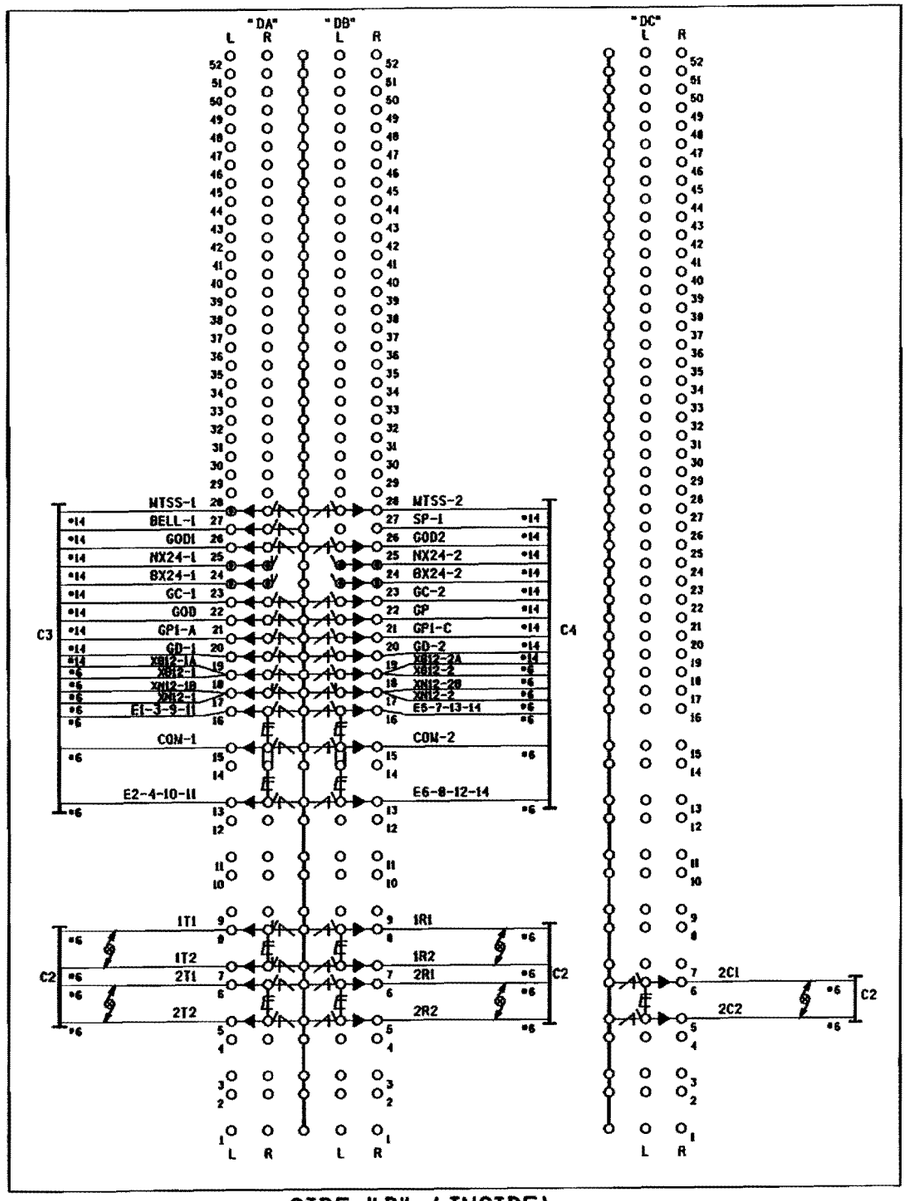

SIDE "D" (INSIDE)

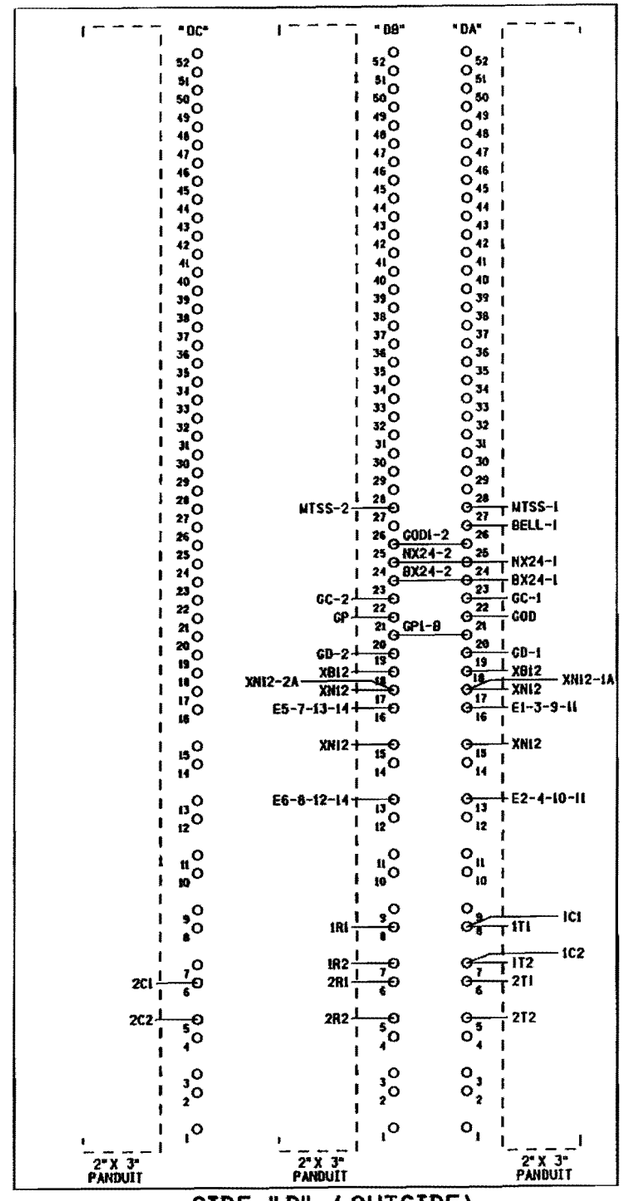

SIDE "D" (OUTSIDE)

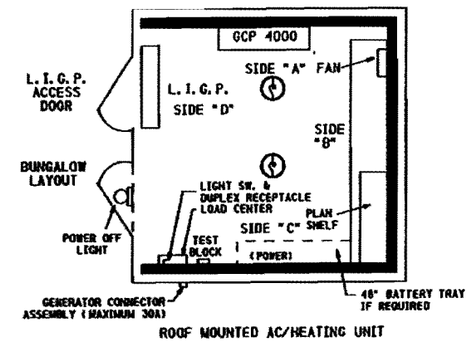

ROOF MOUNTED AC/HEATING UNIT

CABLE CONSIST:

C1-3C#6 TECK 90 U/G TO MAIN SERVICE
C2-(2)-2SC#6 TW. TO TRACK
C3-16C (7#6, 9#14) TO GATE (SIG. #1)
C4-16C (7#6, 9#14) TO GATE (SIG. #2)

NOTES:

1) DENOTES LIGHTNING ARRESTER TYPE: (SAFETRAN #44585-001X)
2) DENOTES EQUALIZER TYPE: (SAFETRAN #44700-001X)
3) DENOTES TWISTED PAIR.
4) ENSURE DOUBLE NUTTING OF ALL TERMINALS.
5) DENOTES INSULATED TERMINAL

PROPOSED
DES. No. _____
RED-IN YELLOW-OUT
AS INSTALLED
DATE _____
BY _____

6' X 6' BUNGALOW

PROPOSED D	M	Y	REVISIONS	D	C	COMPLETED D	M	Y	C

REGION SOUTHERN
SUB. CHICAGO 340
CN

SIGNALS AND COMMUNICATIONS HOMEWOOD
17 JUNE 2010
DES. SP
CH. MKN

BUNGALOW LAYOUT SIDE "D"
LOW IMPEDANCE GROUND PLANE
2400N/TR 89
ASHKUM, IL

CHI-074.85-04

SAFETRAN SYSTEM CORP.
LOUISVILLE DIVISION, LOUISVILLE, KY

SAFETRAN SYSTEMS CORPORATION

DES. : SP	DATE: 17/06/10	JOB NO. : PICA10235	
CKD. : MKN	ISSUE DATE: N/A	EST. NO. : N/A	
DRN. : SP	PLAN NO. : N/A	SHEET 4 OF 15	
P TIME: 13:21	P. DATE: 14-SEP-2010	CAD ID. : CHI-074.85-04	

$WATERMARK

CHI-074.85-05.dgn
14-SEP-2010

REVISIONS				
NO.	DATE	BY	DESCRIPTION	APP. BY
1				
2				
3				
4				
5				

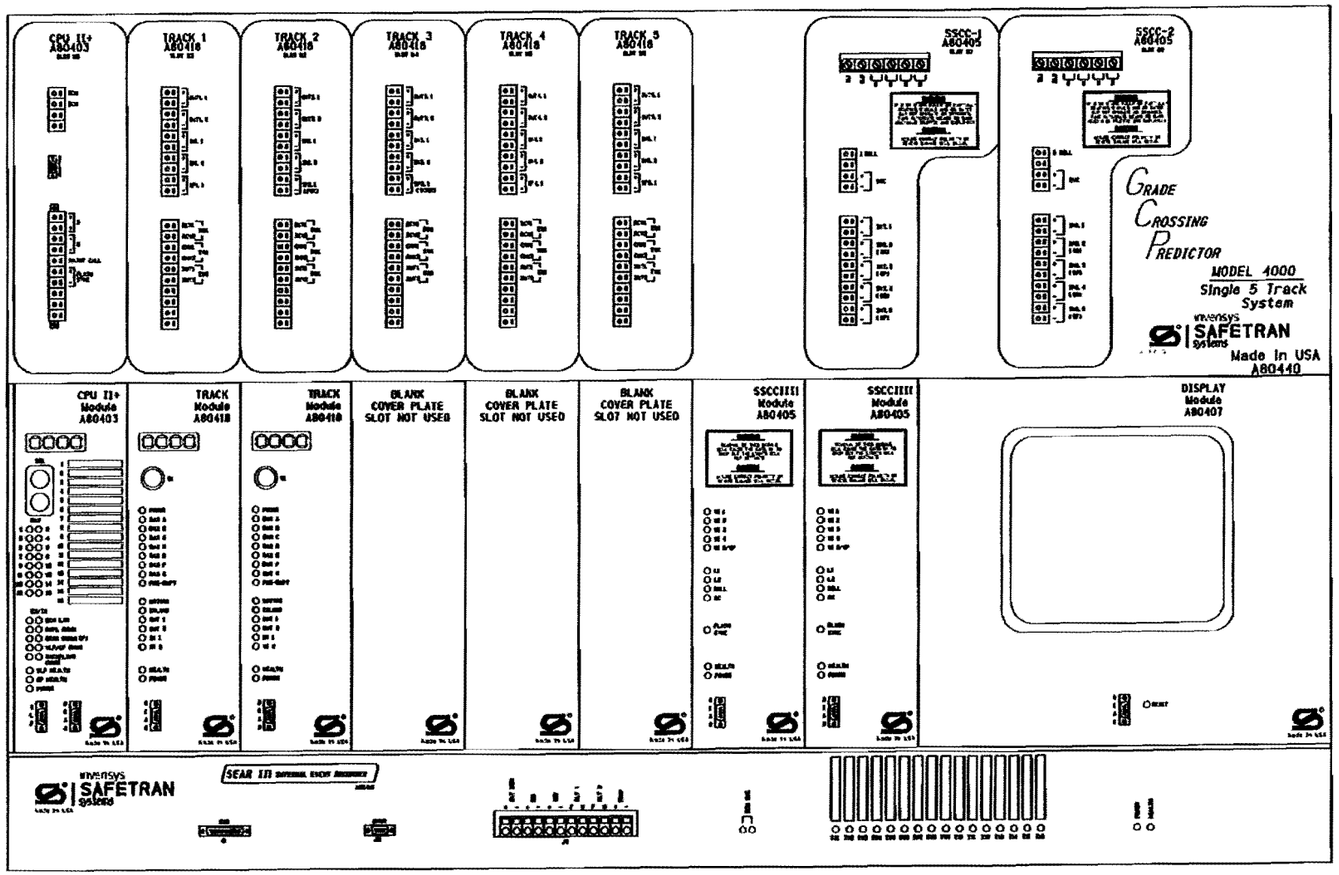

NOTES:

1) DISABLE THE DISPLAY HEATER BY REMOVING JUMPER J-22 (LOCATED AT THE EDGE OF THE DISPLAY MODULE CARD THAT PLUGS INTO THE CHASSIS).

ATTENTION!

ENSURE THE DISPLAY MODULE HEATER IS DISABLED. LEAVING THE DISPLAY HEATER ENABLE WILL REDUCE THE AMOUNT OF BATTERY STANDBY TIME IN THE EVENT OF AN AC POWER FAILURE.

HEATER FUNCTION IS
JUMPER SELECTABLE ON
THE DISPLAY MODULE BOARD.
THREE OPTIONS ARE AVAILABLE.
NORMAL LCD HTR (DEFAULT)
HI CURRENT
NO JUMPER (HEATER DISABLED)

PROPOSED
DES. No. _____
RED-IN YELLOW-OUT
AS INSTALLED
DATE _____
BY _____

6' X 6' BUNGALOW

PROPOSED			REVISIONS	D	C	COMPLETED			C
D	M	Y				D	M	Y	

REGION SOUTHERN
SUB. CHICAGO 340
CN

SIGNALS AND COMMUNICATIONS HOMEWOOD | DES. SP
17 JUNE 2010 | CH. MKN

GCP 4000 NON-REDUNDANT
5 TRACK TRK CHASSIS & MODULE LAYOUT
2400N/TR 89
ASHKUM, IL

CHI-074.85-05

SAFETRAN SYSTEM CORP.
LOUISVILLE DIVISION, LOUISVILLE, KY

SAFETRAN SYSTEMS CORPORATION

DES.: SP	DATE: 17/06/10	JOB NO.: PICA10235	
CKD.: MKN	ISSUE DATE: N/A	EST. NO.: N/A	
DRN.: SP	PLAN NO.: N/A	SHEET 5 OF 15	
P TIME: 13:21	P DATE: 14-SEP-2010	CAD ID.: CHI-074.85-05	

$WATERMARK

CHI-074.85-06.dgn
14-SEP-2010

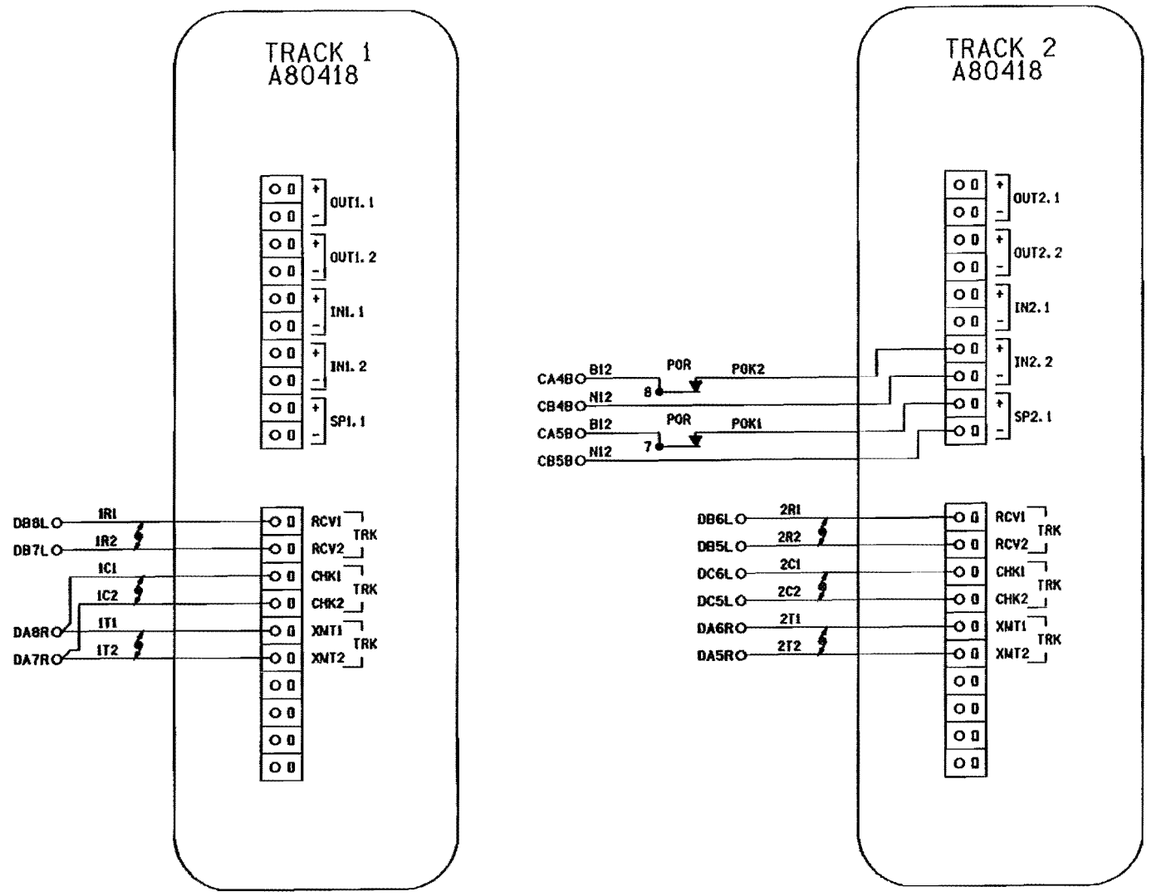

NOTES:

1) ALL WIRING #16 AWG UNLESS OTHERWISE NOTED.

2) DENOTES TWISTED PAIR.

PROPOSED
DES. No. _____
RED-IN YELLOW-OUT
AS INSTALLED
DATE _____
BY _____

6' X 6' BUNGALOW

PROPOSED D	M	Y	REVISIONS	D	C	COMPLETED D	M	Y	C

REGION SOUTHERN
SUB. CHICAGO 340
CN

SIGNALS AND COMMUNICATIONS HOMEWOOD
17 JUNE 2010
DES. SP
CH. MKN

GCP 4000
TRACKS 1& 2 CONNECTIONS
2400N/TR 89
ASHKUM, IL

CHI-074.85-06

SAFETRAN SYSTEM CORP.
LOUISVILLE DIVISION, LOUISVILLE, KY

NO.	DATE	BY	DESCRIPTION	APP. BY
1				
2				
3				
4				
5				

REVISIONS

SAFETRAN SYSTEMS CORPORATION

DES. : SP	DATE: 17/06/10	JOB NO.: P1CA10235	
CKD. : MKN	ISSUE DATE: N/A	EST. NO.: N/A	
DRN. : SP	PLAN NO.: N/A	SHEET 6 OF 15	
P TIME: 13:21	P DATE: 14-SEP-2010	CAD ID.: CHI-074.85-06	

$WATERMARK

CHI-074.85-07.dgn
14-SEP-2010

REVISIONS				
NO.	DATE	BY	DESCRIPTION	APP. BY
1				
2				
3				
4				
5				

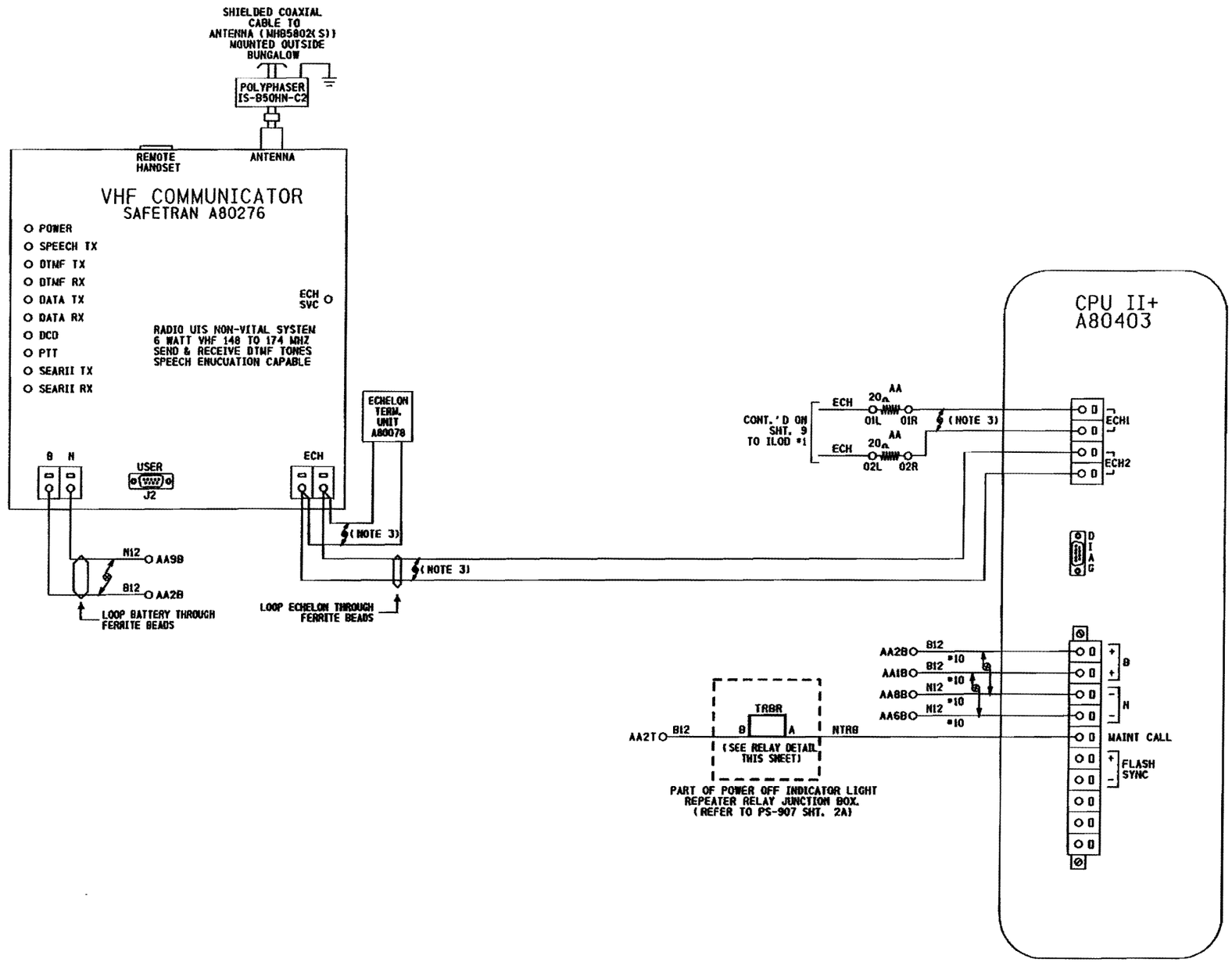

RELAY DETAIL

RELAY - POTTER & BRUNFIELD
MODEL KUMP-14D18-12 SOCKET MOUNTABLE
12 VDC W/ 3 FORM C CONTACTS.

SOCKET - SCREW TERMINAL
MODEL 27E121.

RELAY WIRING DIAGRAM (REAR VIEW)

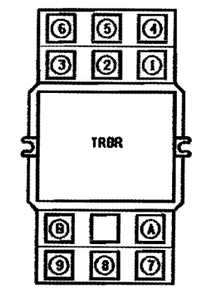

LOCATED OVER ENTRY DOOR

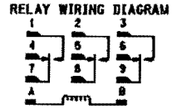

NOTE:
SOCKET NUMBERING CORRESPONDS DIRECTLY WITH RELAY NUMBERING.
(COIL SHOWN ENERGIZED)

NOTES:
1) ALL WIRING #16 AWG UNLESS OTHERWISE NOTED.
2) ∮ DENOTES TWISTED PAIR.
3) USE BELDEN CABLE, PART #8461-u500-60 FOR ALL ECHELON AND LAN WIRING.

PROPOSED
DES. No. _____
RED-IN YELLOW-OUT
AS INSTALLED
DATE _____
BY _____

6' X 6' BUNGALOW

PROPOSED D	M	Y	REVISIONS	D	C	COMPLETED D	M	Y	C

REGION SOUTHERN
SUB. CHICAGO 340
CN

SIGNALS AND COMMUNICATIONS HONEWOOD | DES. SP
17 JUNE 2010 | CH. MKN

GCP 4000
CPUII+ & VHF COMMUNICATOR
2400N/TR 89
ASHKUM, IL

CHI-074.85-07

SAFETRAN SYSTEM CORP.
LOUISVILLE DIVISION, LOUISVILLE, KY

SAFETRAN SYSTEMS CORPORATION

DES.: SP	DATE: 17/06/10	JOB NO.: PICA10235	
CAD.: MKN	ISSUE DATE: N/A	EST. NO. N/A	
DRN.: SP	PLAN NO. N/A	SHEET 7 OF 15	
P TIME: 13:21	P DATE: 14-SEP-2010	CAD ID.: CHI-074.85-07	

$WATERMARK

CHI-074.85-08.dgn
14-SEP-2010

REVISIONS				
NO.	DATE	BY	DESCRIPTION	APP. BY
1				
2				
3				
4				
5				

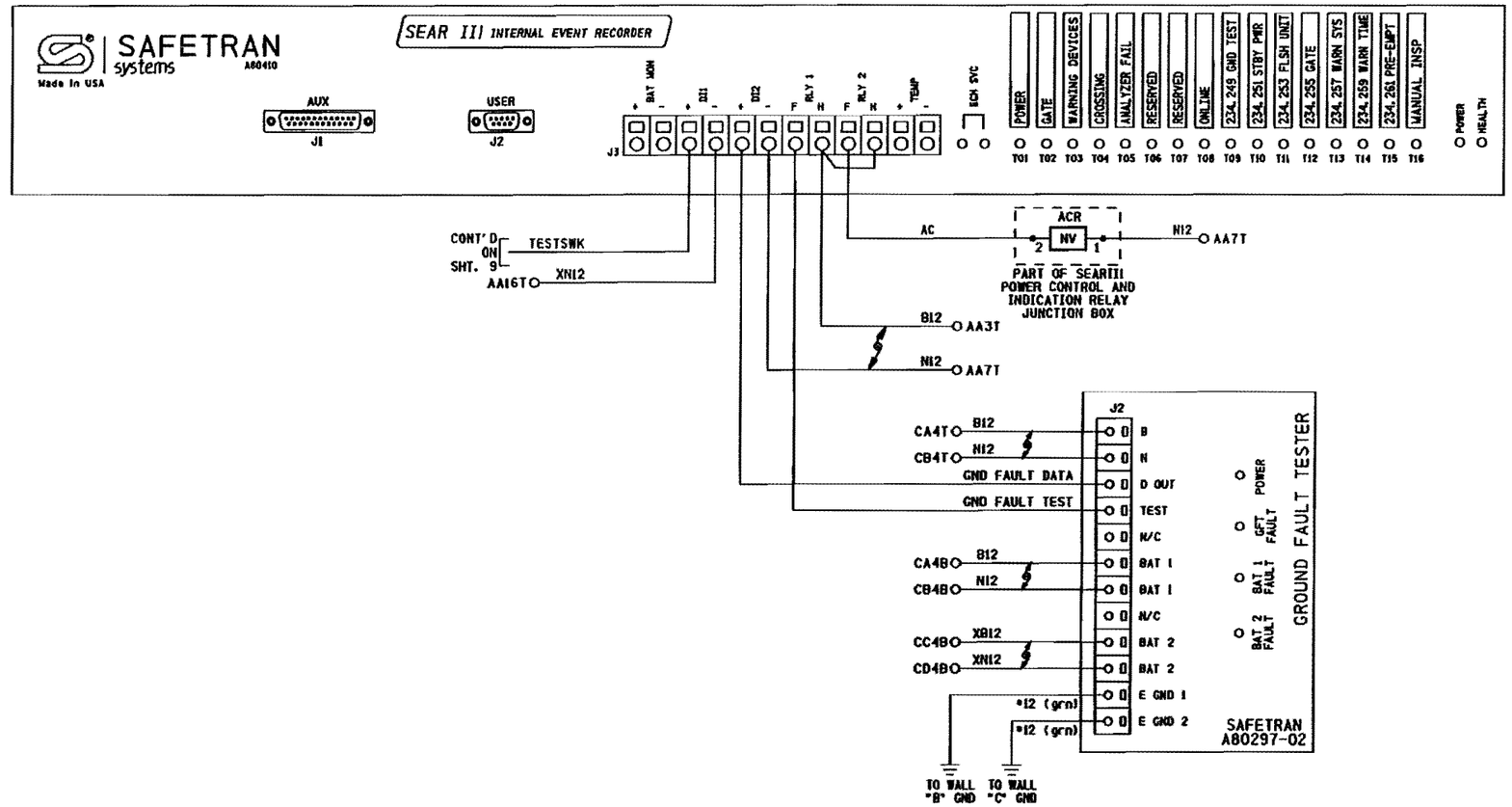

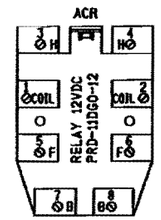

ACR - P&B RELAY, 2FB
(WITH TWO 30A CONTACTS @ 240VAC)
RELAY PART #PRD-11DG0-12

NOTES:

1) ALL WIRING #16 AWG UNLESS OTHERWISE NOTED.

2) DENOTES TWISTED PAIR.

PROPOSED
DES. No. _____
RED-IN YELLOW-OUT
AS INSTALLED
DATE _____
BY _____

6' X 6' BUNGALOW

PROPOSED D	M	Y	REVISIONS	D	C	COMPLETED D	M	Y	C

REGION SOUTHERN
SUB. CHICAGO 340
CN

SIGNALS AND COMMUNICATIONS HOMEWOOD	DES. SP
17 JUNE 2010	CH. MKH

GCP 4000/SEAR III
INTERNAL EVENT ANALYZER WITH GFT
2400N/TR 89
ASHKUM, IL

CHI-074.85-08

SAFETRAN SYSTEM CORP.
LOUISVILLE DIVISION, LOUISVILLE, KY

SAFETRAN SYSTEMS CORPORATION

DES.: SP	DATE: 17/06/10	JOB NO.: PTCA10235	
CKD.: MKH	ISSUE DATE: N/A	EST. NO. N/A	
DRN.: SP	PLAN NO.: N/A	SHEET 8 OF 15	
P TIME: 13:21	P DATE: 14-SEP-2010	CAD ID.: CHI-074.85-08	

$WATERMARK

CHI-074.85-09.dgn
14-SEP-2010

REVISIONS				
NO.	DATE	BY	DESCRIPTION	APP. BY
1				
2				
3				
4				
5				

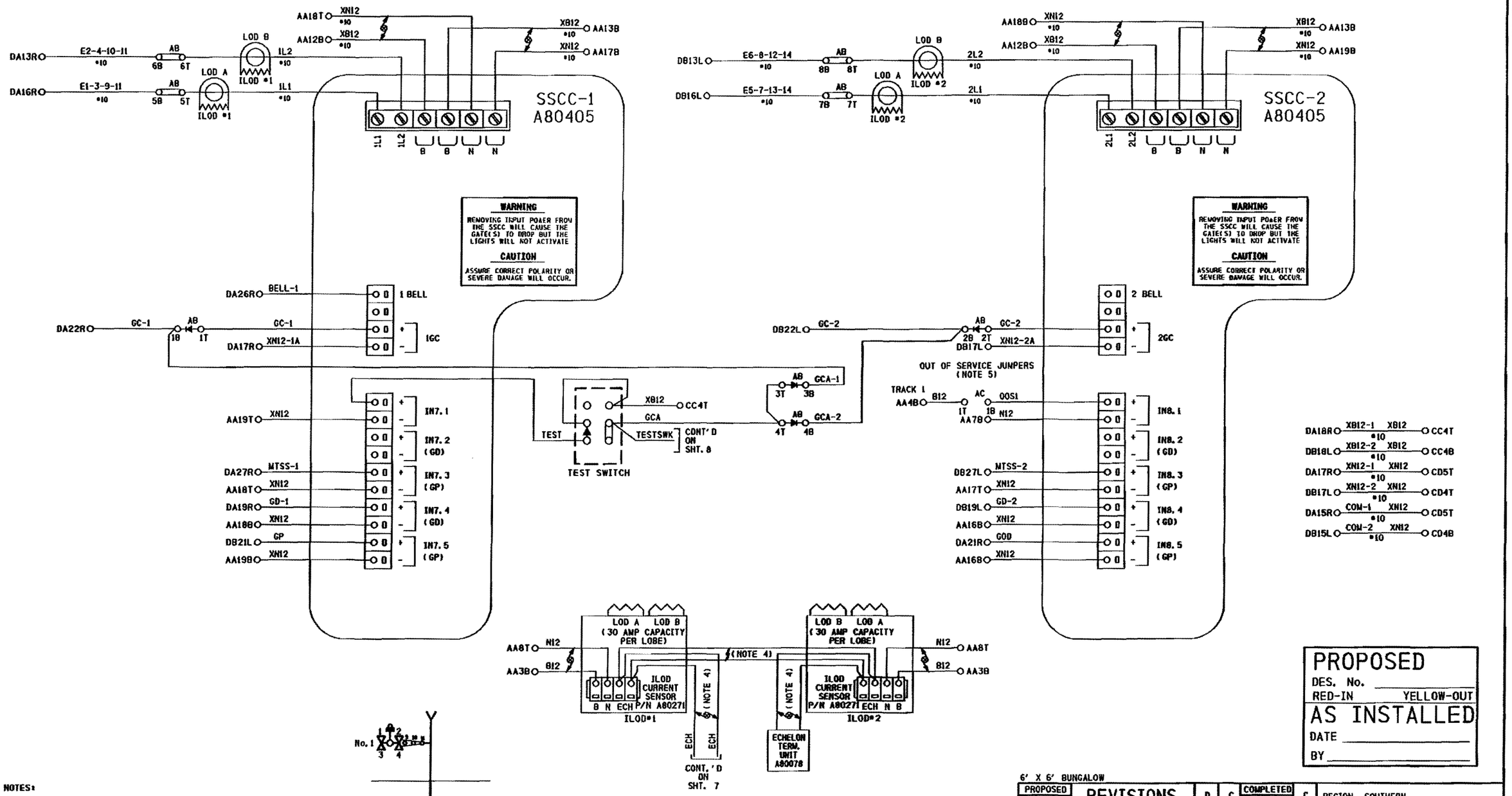

NOTES:

1) ⊣◀⊢ DENOTES RECTIFIER # (SAFETRAN #8008A299006)

2) ⚡ DENOTES TWISTED PAIR.

3) ALL WIRING TO BE #16 AWG MINIMUM UNLESS OTHERWISE NOTED.

4) USE BELDEN CABLE, PART #8461-u500-60 FOR ALL ECHELON AND LAN WIRING.

5) TO TAKE TRACK 1 (T1) OUT OF SERVICE, JUMPER AC1T TO AC1B

PROPOSED
DES. No. _____
RED-IN YELLOW-OUT
AS INSTALLED
DATE _____
BY _____

6' X 6' BUNGALOW

PROPOSED			REVISIONS	D	C	COMPLETED			C
D	M	Y				D	M	Y	

REGION SOUTHERN
SUB. CHICAGO 340

SIGNALS AND COMMUNICATIONS HOMEWOOD
DES. SP
17 JUNE 2010
CH. MKN

GCP 4000/SSCCIIII
2-20 AMP CONTROLLERS W/ 2 ILODS
2400N/TR 89
ASHKUM, IL

CHI-074.85-09

SAFETRAN SYSTEM CORP.
LOUISVILLE DIVISION, LOUISVILLE, KY

SAFETRAN SYSTEMS CORPORATION

DES.: SP	DATE: 17/06/10	JOB NO.: PICA10235	
CKD.: MKN	ISSUE DATE: N/A	EST. NO. N/A	
DRN.: SP	PLAN NO.: N/A	SHEET 9 OF 15	
P TIME: 13:22	P DATE: 14-SEP-2010	CAD ID.: CHI-074.85-09	

$WATERMARK

CHI-074.85-10.dgn
14-SEP-2010

NO.	DATE	BY	DESCRIPTION	APP. BY
1				
2				
3				
4				
5				

REVISIONS

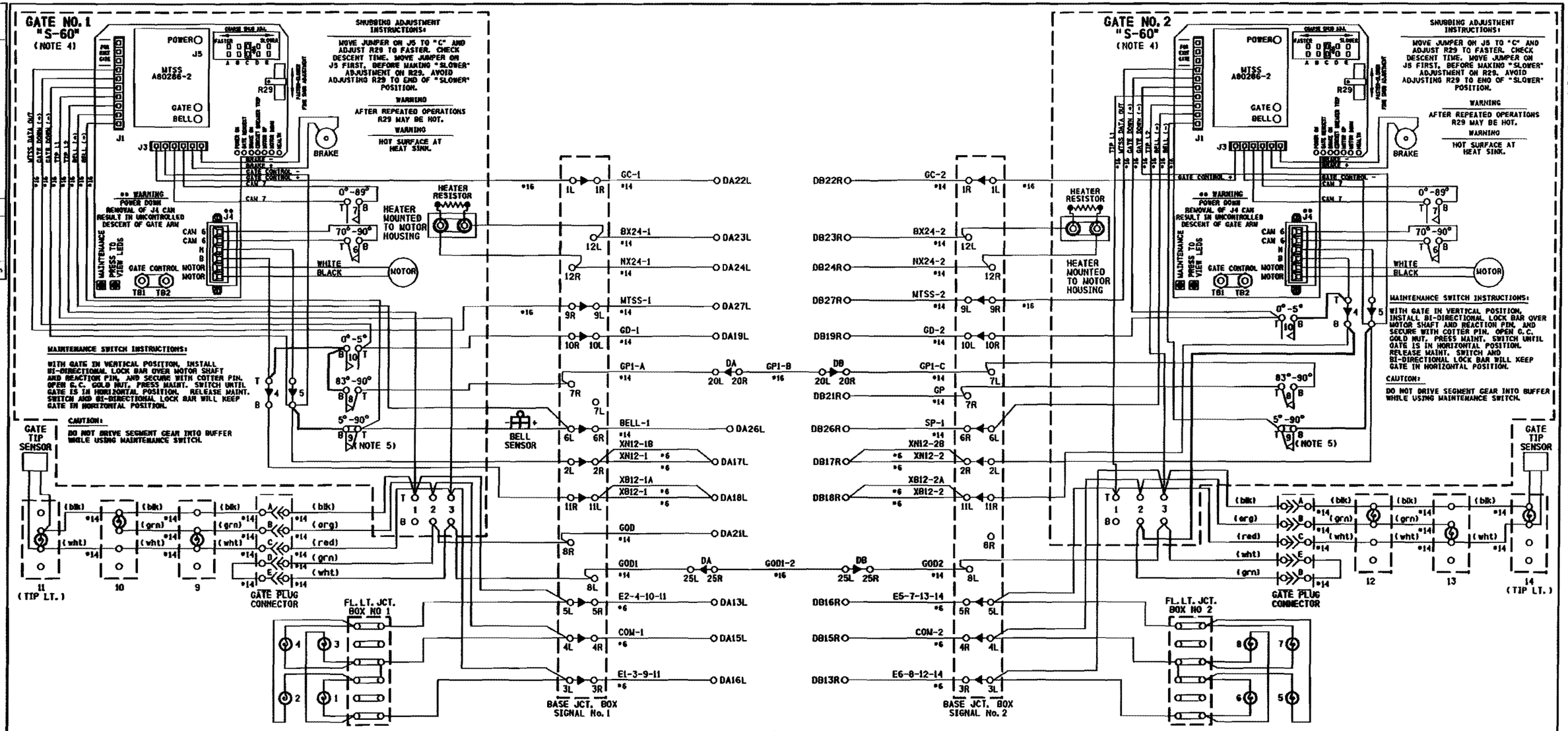

NOTES:

1) ON GATE No. 1 ADD JUMPER BETWEEN TERMINALS:
ADD JUMPER BETWEEN TERMINAL 4T & 10B,
ADD JUMPER BETWEEN TERMINAL 10B & 8B
AND ADD JUMPER BETWEEN TERMINAL 5B & 9B.

2) ON GATE No. 2 ADD JUMPER BETWEEN TERMINALS:
ADD JUMPER BETWEEN TERMINAL 4T &10B,
ADD JUMPER BETWEEN TERMINAL 5B & 9B,
AND ADD JUMPER BETWEEN TERMINAL 4B & 2B.

3) ALL WIRING #10 AWG MINIMUM UNLESS OTHERWISE NOTED. WIRE SIZES SHOWN ARE MINIMUM GAUGE.

4) GATE DESCENT TIME (RELEASE FROM VERTICAL TO FULLY HORIZONTAL) TO BE WITHIN 11 SECONDS.

5) BELL CUT-OUT (5°-90°) WHEN REQUIRED REMOVE STRAP BETWEEN 9B AND 9T.

6) ENSURE ALL TERMINALS HAVE TWO SHOULDER NUTS.

PROPOSED
DES. No. _____
RED-IN YELLOW-OUT
AS INSTALLED
DATE _____
BY _____

6' X 6' BUNGALOW

PROPOSED D	M	Y	REVISIONS	D	C	COMPLETED D	M	Y	C

REGION SOUTHERN
SUB. CHICAGO 340

SIGNALS AND COMMUNICATIONS HOMEWOOD
17 JUNE 2010
DES. SP
CH. MKN

GATE MECHANISM CONTROL CIRCUITS
SAFETRAN MODEL S60
2400N/TR 89
ASHKUM, IL

CHI-074. 85-10

SAFETRAN SYSTEMS CORPORATION
DES. : SP DATE: 17/06/10 JOB NO. : PICA10235
CKD. : MKN ISSUE DATE: N/A EST. NO. : N/A
DRN. : SP PLAN NO. : N/A SHEET 10 OF 15
P. TIME: 13:22 P. DATE: 14-SEP-2010 CAD ID. : CHI-074.85-10

SAFETRAN SYSTEM CORP.
LOUISVILLE DIVISION, LOUISVILLE, KY

$WATERMARK

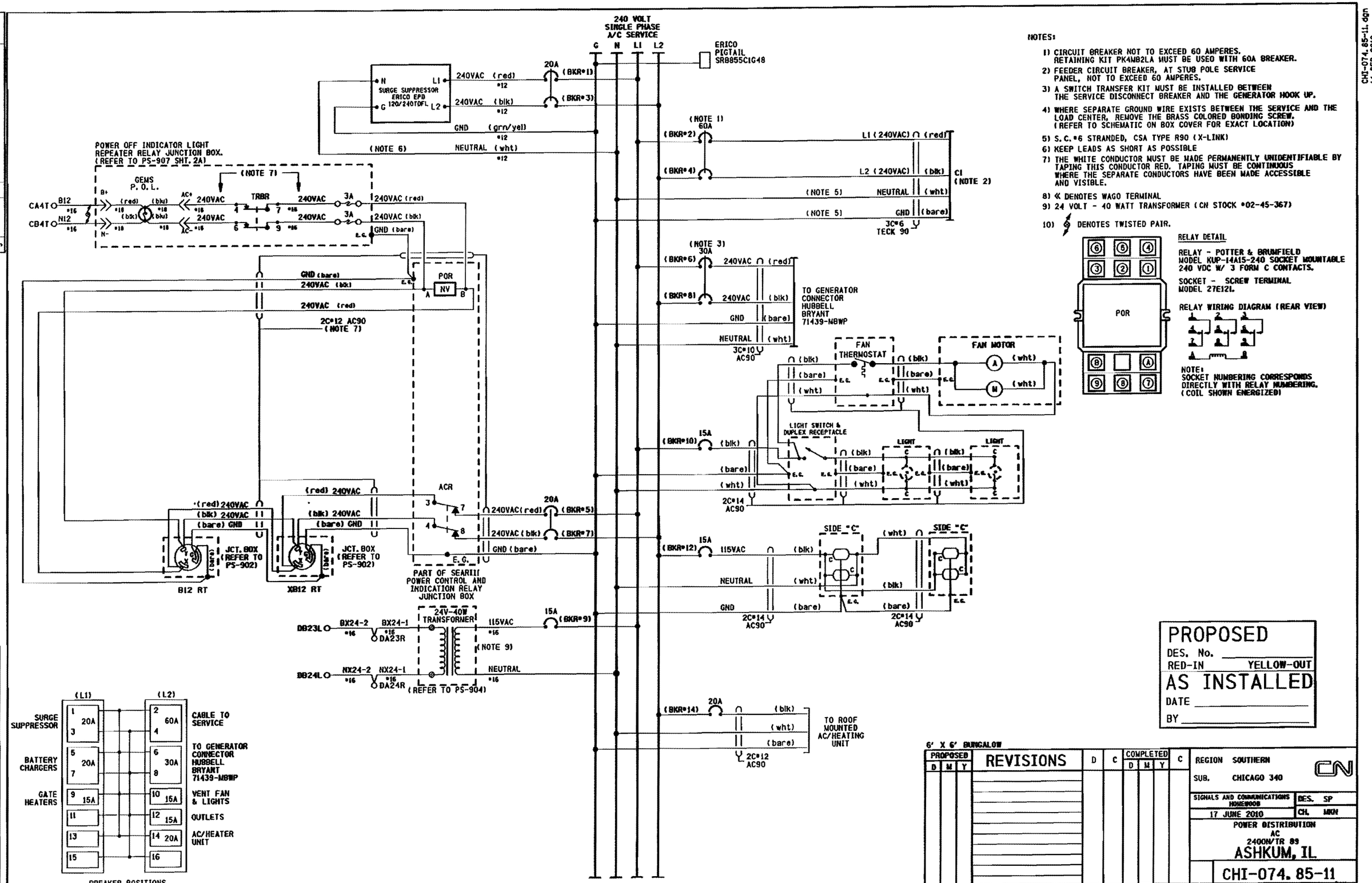

NOTES:

1) CIRCUIT BREAKER NOT TO EXCEED 60 AMPERES. RETAINING KIT PK4MB2LA MUST BE USED WITH 60A BREAKER.
2) FEEDER CIRCUIT BREAKER, AT STUB POLE SERVICE PANEL, NOT TO EXCEED 60 AMPERES.
3) A SWITCH TRANSFER KIT MUST BE INSTALLED BETWEEN THE SERVICE DISCONNECT BREAKER AND THE GENERATOR HOOK UP.
4) WHERE SEPARATE GROUND WIRE EXISTS BETWEEN THE SERVICE AND THE LOAD CENTER, REMOVE THE BRASS COLORED BONDING SCREW. (REFER TO SCHEMATIC ON BOX COVER FOR EXACT LOCATION)
5) S.C. #6 STRANDED, CSA TYPE R90 (X-LINK)
6) KEEP LEADS AS SHORT AS POSSIBLE
7) THE WHITE CONDUCTOR MUST BE MADE PERMANENTLY UNIDENTIFIABLE BY TAPING THIS CONDUCTOR RED. TAPING MUST BE CONTINUOUS WHERE THE SEPARATE CONDUCTORS HAVE BEEN MADE ACCESSIBLE AND VISIBLE.
8) « DENOTES WAGO TERMINAL
9) 24 VOLT - 40 WATT TRANSFORMER (CN STOCK #02-45-367)
10) ⚡ DENOTES TWISTED PAIR.

RELAY DETAIL

RELAY - POTTER & BRUMFIELD MODEL KUP-14A15-240 SOCKET MOUNTABLE 240 VDC W/ 3 FORM C CONTACTS.

SOCKET - SCREW TERMINAL MODEL 27E121.

RELAY WIRING DIAGRAM (REAR VIEW)

NOTE: SOCKET NUMBERING CORRESPONDS DIRECTLY WITH RELAY NUMBERING. (COIL SHOWN ENERGIZED)

$WATERMARK

NO.	DATE	BY	REVISIONS DESCRIPTION	APP. BY
1				
2				
3				
4				
5				

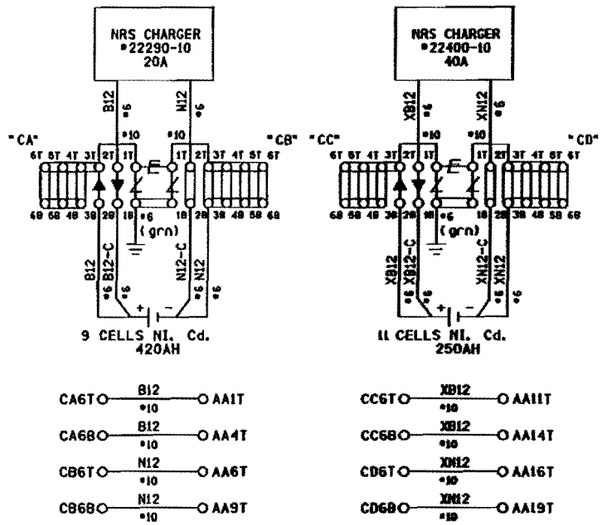

PROPOSED
DES. No. _____
RED-IN YELLOW-OUT
AS INSTALLED
DATE _____
BY _____

6' X 6' BUNGALOW

PROPOSED D	M	Y	REVISIONS	D	C	COMPLETED D	M	Y	C

REGION SOUTHERN
SUB. CHICAGO 340
CN

SIGNALS AND COMMUNICATIONS HOMEWOOD | DES. SP
17 JUNE 2010 | CH. MKN

POWER DISTRIBUTION
DC
2400W/TR 89
ASHKUM, IL

CHI-074. 85-12

SAFETRAN SYSTEM CORP.
LOUISVILLE DIVISION, LOUISVILLE, KY

CHI-074.85-12.dgn
14-SEP-2010

SAFETRAN SYSTEMS CORPORATION

DES. : SP	DATE: 17/06/10	JOB NO.: PCA10235
CKD. : MKN	ISSUE DATE: N/A	EST. NO.: N/A
DRN. : SP	PLAN NO.: N/A	SHEET 12 OF 15
P. TIME: 13:22	P. DATE: 14-SEP-2010	CAD ID.: CHI-074.85-12

$WATERMARK

REVISIONS				
NO.	DATE	BY	DESCRIPTION	APP. BY
1				
2				
3				
4				
5				

Program Report

Location and SIN

DOT Number: 288978H
Milepost Number: 74.85
Site Name: 2400N_TR 89

SIN: 762010010016

WCF and Template Selection

WCF Name: GCP-T6X-02-2.mcf
WCF Revision: 022
WCFCRC: 79225F13

Template = 2A:4 BI, 2 Rem

Check Numbers

Office Check Number: 4A695577
Config. Check Number: 75C8943F
(Based on WCF Revision 022)

Program

BASIC: module configuration
Track 1/PSO 1 Slot = Track
Track 2/RIO 1 Slot = Track
Track 3/PSO 2 Slot = Not Used
Track 4/PSO 3 Slot = Not Used
Track 5/RIO 2 Slot = Not Used
Track 6/RIO 3 Slot = Not Used
SSCC-1 Slot = SSCC3I
SSCC-2 Slot = SSCC3I
SEAR Used = Yes

BASIC: MS/GCP operation
Track 1 : MS/GCP Operation = Yes
Track 2 : MS/GCP Operation = Yes

BASIC: island operation
Track 1 : Island Used = Internal
Track 2 : Island Used = No

BASIC: preemption
Preempt Logic = No

BASIC: radio Dax links
Radio DAX link A Used = No
Radio DAX link B Used = No

BASIC: Vital Comms links
Vital Comms link 1 Used = No
Vital Comms link 2 Used = No

PREDICTORS: track 1
Track 1 : Prime Used = Yes
Track 1 : Dax A Used = No
Track 1 : Dax B Used = No
Track 1 : Dax C Used = No
Track 1 : Dax D Used = No
Track 1 : Dax E Used = No
Track 1 : Dax F Used = No
Track 1 : Dax G Used = No

PREDICTORS: track 2
Track 2 : Prime Used = Yes
Track 2 : Dax A Used = No
Track 2 : Dax B Used = No
Track 2 : Dax C Used = No
Track 2 : Dax D Used = No
Track 2 : Dax E Used = No
Track 2 : Dax F Used = No
Track 2 : Dax G Used = No

GCP: track 1
Track 1 : GCP Freq Category = Standard
Track 1 : GCP Frequency = 86 Hz (TCN)
Track 1 : Approach Distance = 4000 ft (TCN)
Track 1 : Uni/Bi/Sim-Bidirn = Bidirn (TCN)
Track 1 : GCP Transmit Level = High (TCN)
Track 1 : Island Connection = Isl1
Track 1 : Directionally Wired = No
Track 1 : Island Distance = 120 ft (TCN)
Track 1 : Computed Distance = 9999 ft (TCN)
Track 1 : Linearization Steps = 100 (TCN)

GCP: track 1 enhanced det
Track 1 : Inbound PS Sensitivity = High
Track 1 : Speed Limiting Used = Yes
Track 1 : Outbound False Act Lvl = Normal
Track 1 : Outbound PS Timer = 20 sec
Track 1 : Trailing Switch Logic = On
Track 1 : Post Joint Detn Time = 15 sec
Track 1 : Adv Appr Predn = No
Track 1 : Cancel Pickup Delay = This Isl

GCP: track 1 BIDAX RX
Track 1 : BIDAX To RX Appr = Not Used

GCP: track 1 BIDAX TX
Track 1 : BIDAX To TX Appr = Not Used

GCP: track 1 prime
Track 1 : Prime Warning Time = 30 sec
Track 1 : Prime Offset Distance = 0 ft
Track 1 : Switch MS EZ Level = 8
Track 1 : Prime MS/GCP Mode = Pred
Track 1 : Prime Pickup Delay = 30 sec
Track 1 : Prime UAX = Not Used

GCP: track 1 pos start
Track 1 : Positive Start = Off
Track 1 : Sudden Shnt Det Used = No
Track 1 : Low EZ Detection Used = No

GCP: track 1 MS Control
Track 1 : MS/GCP Ctrl IP Used = No
Track 1 : MS Sensitivity Level = 0
Track 1 : Compensation Level = 1300 (TCN)
Track 1 : Warn Time-Ballast Comp = High (TCN)
Track 1 : Low EX Adjustment = 39
Track 1 : Bidirn Dax Passthru = No
Track 1 : False Act on Train Stop = No
Track 1 : EX Limiting Used = Yes
Track 1 : EZ Correction Used = Yes

GCP: track 2
Track 2 : GCP Freq Category = Standard
Track 2 : GCP Frequency = 86 Hz (TCN)
Track 2 : Approach Distance = 3758 ft (TCN)
Track 2 : Uni/Bi/Sim-Bidirn = Unidirn (TCN)
Track 2 : GCP Transmit Level = High (TCN)
Track 2 : Island Connection = No Islands
Track 2 : Directionally Wired = No
Track 2 : Island Distance = 0 ft (TCN)
Track 2 : Computed Distance = 9999 ft (TCN)
Track 2 : Linearization Steps = 100 (TCN)

GCP: track 2 enhanced det
Track 2 : Inbound PS Sensitivity = High
Track 2 : Speed Limiting Used = Yes
Track 2 : Outbound False Act Lvl = Normal
Track 2 : Outbound PS Timer = 20 sec
Track 2 : Trailing Switch Logic = On
Track 2 : Post Joint Detn Time = 15 sec
Track 2 : Adv Appr Predn = No
Track 2 : Cancel Pickup Delay = This Isl

GCP: track 2 BIDAX RX
Track 2 : BIDAX To RX Appr = Not Used

GCP: track 2 BIDAX TX
Track 2 : BIDAX To TX Appr = Not Used

GCP: track 2 prime
Track 2 : Prime Warning Time = 30 sec
Track 2 : Prime Offset Distance = 242 ft
Track 2 : Switch MS EZ Level = 8
Track 2 : Pickup Delay Mode = Auto
Track 2 : Prime MS/GCP Mode = Pred
Track 2 : Prime Pickup Delay = 30 sec
Track 2 : Prime UAX = Not Used

GCP: track 2 pos start
Track 2 : Positive Start = Off
Track 2 : Sudden Shnt Det Used = No
Track 2 : Low EZ Detection Used = No

GCP: track 2 MS Control
Track 2 : MS/GCP Ctrl IP Used = No
Track 2 : MS Sensitivity Level = 0
Track 2 : Compensation Level = 1300 (TCN)
Track 2 : Warn Time-Ballast Comp = Low (TCN)
Track 2 : Low EX Adjustment = 39
Track 2 : Bidirn Dax Passthru = No
Track 2 : False Act on Train Stop = No
Track 2 : EX Limiting Used = Yes
Track 2 : EZ Correction Used = Yes

ISLAND: track 1
Track 1 : Isl Frequency = 8.3 kHz
Track 1 : Pickup Delay (2s +) = 0 sec
Track 1 : Isl Enable IP Used = No

AND: track Anding
AND 1 XR Used = Yes
AND 2 Used = No
AND 3 Used = No
AND 4 Used = No
AND 5 Used = No
AND 6 Used = No
AND 7 Used = No
AND 8 Used = No

AND: AND 1 XR
AND 1 XR Track 1 = Prime
AND 1 XR Track 2 = Prime
AND 1 Enable Used = Yes
And 1 Enable Pickup = 0 sec
AND 1 Enable Drop = 0 sec
AND 1 Wrap Used = No

ADVANCED: MS restart
MS/GCP Restart Used = No

ADVANCED: out of service
OOS Control = OOS IPs

ADVANCED: out of service 2
T1 OOS Control = OOS Input 1
T2 OOS Control = OOS Input 1
T1 OOS Controls = GCP and Island
T2 OOS Controls = GCP Only

ADVANCED: track wrap circuits
Wrap LOS Timer = 5 sec
Track 1 Wrap Used = No
Track 2 Wrap Used = No

ADVANCED: trk 1 overrides
Track 1 : All Predictors Override Used = No

ADVANCED: trk 2 overrides
Track 2 : All Predictors Override Used = No

ADVANCED: OR logic
OR 1 Used = No
OR 2 Used = No
OR 3 Used = No
OR 4 Used = No

ADVANCED: internal I/O 1
Pass Thrus = No
Int.1 Sets = Not Used
Int.1 Set by = Not Used
Int.2 Sets = Not Used
Int.2 Set by = Not Used
Int.3 Sets = Not Used
Int.3 Set by = Not Used
Int.4 Sets = Not Used
Int.4 Set by = Not Used

ADVANCED: internal I/O 2
Int.5 Sets = Not Used
Int.5 Set by = Not Used
Int.6 Sets = Not Used
Int.6 Set by = Not Used
Int.7 Sets = Not Used
Int.7 Set by = Not Used
Int.8 Sets = Not Used
Int.8 Set by = Not Used

ADVANCED: internal I/O 3
Int.9 Sets = Not Used
Int.9 Set by = Not Used
Int.10 Sets = Not Used
Int.10 Set by = Not Used
Int.11 Sets = Not Used
Int.11 Set by = Not Used
Int.12 Sets = Not Used
Int.12 Set by = Not Used

ADVANCED: internal I/O 4
Int.13 Sets = Not Used
Int.13 Set by = Not Used
Int.14 Sets = Not Used
Int.14 Set by = Not Used
Int.15 Sets = Not Used
Int.15 Set by = Not Used
Int.16 Sets = Not Used
Int.16 Set by = Not Used

ADVANCED: site options
Daylight Savings = On
Units = Standard
Maint Call Rpt IP Used = No
Emergency Activate IP = No
EZ/EX Logging = Change
EZ/EX Point Change = 3

SSCC
Gates Used = Yes
SSCC1+2 GPs Coupled = Yes
Min Activation = 25 sec
Rmt Activation Cancel = 3 min
Bell On Gate Rising = No
Mute Bell On Gate Down = No
SSCCIV Controller Used = No

SSCC: 1
SSCC-1 Activation = AND 1 XR
SSCC-1 Gate Delay = 3 sec
SSCC-1 Number of GPs = 1
SSCC-1 Number of GDs = 1
SSCC 1 : Flash Rate = 60
SSCC 1 : Low Battery Detection = No
SSCC 1 : Flash Sync = master
SSCC 1 : Invert Gate Output = No
SSCC 1 : Lamp Neutral Test = Off
Aux-1 Xng Ctrl Used = No

SSCC: 2
SSCC-2 Activation = AND 1 XR
SSCC-2 Gate Delay = 3 sec
SSCC-2 Number of GPs = 0
SSCC-2 Number of GDs = 1
SSCC 2 : Flash Rate = 60
SSCC 2 : Low Battery Detection = No
SSCC 2 : Flash Sync = slave
SSCC 2 : Invert Gate Output = No
SSCC 2 : Lamp Neutral Test = Off
Aux-2 Xng Ctrl Used = No

OUTPUT: assignment page 1
OUT 1.1 = Not Used
OUT 1.2 = Not Used
OUT 2.1 = Not Used
OUT 2.2 = Not Used

INPUT: assignment page 1
IN 1.1 = Not Used
IN 1.2 = Not Used
IN 2.1 = Not Used
IN 2.2 = Not Used

IO: assignment SSCC
OUT GC 1 = Gate Output 1
OUT GC 2 = Gate Output 2
IN 7.1 = AND 1 XR Enable
IN 7.2 = Not Used
IN 7.3 = Not Used
IN 7.4 = GD 1.1
IN 7.5 = GP 1.1
IN 8.1 = Out Of Service IP 1
IN 8.2 = Not Used
IN 8.3 = Not Used
IN 8.4 = GD 2.1
IN 8.5 = Not Used

SEAR
SEAR Subnode = 99
DI 1 = General1
DI 2 = Gnd Flt Tester 1
Rly 1 = Ground Fault Test
Rly 2 = AC Control

SEAR: Inputs
SP 2.1 = POK 1
SP 3.1 = Not Used
SP 4.1 = Not Used
SP 5.1 = Not Used
SP 6.1 = Not Used

SEAR: slot 1-4 Inputs
IN 1.1 = Not Used
IN 1.2 = Not Used
IN 2.1 = Not Used
IN 2.2 = POK 2
IN 3.1 = Not Used
IN 3.2 = Not Used
IN 4.1 = Not Used
IN 4.2 = Not Used

SEAR: Inputs slot 5
IN 5.1 = Not Used
IN 5.2 = Not Used

SEAR: Inputs slot 6
IN 6.1 = Not Used
IN 6.2 = Not Used

SEAR: slot 7-8 Inputs
IN 7.2 = Not Used
IN 7.3 = TSS 1
IN 8.2 = Not Used
IN 8.3 = TSS 2
IN 8.5 = General2

TEMPLATE MTF-2A

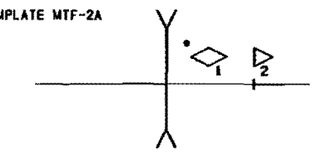

♦ INDICATES TRACK WITH ISLAND

SITE: programming
Radio Subnode = 1
Field Password = Off
Low Battery Enabled = Off

Configuration Package File

Filename: 288978H.pac
DT Version: 5.0.7

NOTES:

1) DISTANCE(S) TO BE VERIFIED AT INSTALLATION. INDICATE SELECTED PROGRAMMED VALUE IF DIFFERENT THAN SHOWN. REFER TO 4000 GCP INSTRUCTION/INSTALLATION MANUAL FOR PROGRAMMING PARAMETERS.

2) PROGRAM TEXT HIGHLITED IN RED INDICATES 4000 PROGRAM MODIFICATIONS TO DEFAULT PROGRAM VALUES.

3) EACH CONSTANT WARNING DEVICE SYSTEM TO BE PROGRAMMED TO CONVERT TO A MOTION SENSOR 300 FEET FROM EDGE OF ROAD TRAVELLED WAY.
SHUNT TRACK 300 FEET FROM EDGE OF ROAD TRAVELLED WAY AND NOTE "EZ" VALUE.
PROGRAM EACH SYSTEM WITH THE INDICATED "EZ" VALUE +2.

4) VERIFY SET TIMER VALUE TO MATCH ACTUAL TRAIN MOVEMENT WITHIN THE CROSSING APPROACH CIRCUITS.

PROPOSED
DES. No. _____
RED-IN YELLOW-OUT
AS INSTALLED
DATE _____
BY _____

PROPOSED			REVISIONS	D	C	COMPLETED			C
D	M	Y				D	M	Y	

REGION SOUTHERN
SUB. CHICAGO 340
CN

SIGNALS AND COMMUNICATIONS HOMEWOOD — DES. SP
17 JUNE 2010 — CH. MKN

GCP 4000
PROGRAM INFORMATION
2400N/TR 89
ASHKUM, IL

CHI-074.85-13

SAFETRAN SYSTEM CORP.
LOUISVILLE DIVISION, LOUISVILLE, KY

SAFETRAN SYSTEMS CORPORATION		
DES. : SP	DATE: 17/06/10	JOB NO. : PTC410235
CKD. : MKN	ISSUE DATE: N/A	EST. NO. : N/A
DRN. : SP	PLAN NO. : N/A	SHEET 13 OF 15
P TIME: 13:22	P DATE: 14-SEP-2010	CAD ID. : CHI-074.85-13

CHI-074.85-13.dgn
14-SEP-2010

REVISIONS			
NO.	DATE	BY	DESCRIPTION	APP. BY
1				
2				
3				
4				
5				

TO CONFIGURE SEARII & SEARIII PRESS SITE SETUP KEY. USE ARROW KEYS TO MAKE SELECTION, PRESS ENTER AFTER SELECTION HAS BEEN MADE.

STAGE 1

PROGRAM MENU QUESTIONS	PROGRAM	OPTIONS/RANGE
DATE/TIME?	CURRENT DATE/TIME	CURRENT DATE/TIME
AUTOMATIC DST ADJUSTMENT?	YES	YES, NO
TIME ZONE?	CENTRAL	EASTERN, CENTRAL, MOUNTAIN, PACIFIC, ALASKA, HAWAII, ATLANTIC, SASKATCHEWAN, NEW FOUNLAND
SITE NAME?	2400N / TR 89	STREET NAME
MILE POST?	74.85	MILEAGE
DOT/CROSSING IS *?	288 978H	DOT/CROSSING *
TESTER TYPE?	CROSSING	CROSSING, WAYSIDE
DATE FORMAT?	dd-mm-yyyy	mm-dd-yyyy, dd-mm-yyyy
TEMPERATURE FORMAT?	FAHRENHEIT	FAHRENHEIT, CELSIUS
SITE TYPE?		NO COM, BULLHORN, DIALUP, NODE, COLLECTOR
SITE ATCS ADDRESS?		7.RRR.LLL.GGG.99.01
OFFICE ATCS ADDRESS?		2.RRR.NN.DDDD
PRIMARY HOP ADDR? (FOR NODE USE)		7.RRR.LLL.GGG.00.01
BACKUP HOP ADDR1? (FOR NODE USE)		7.RRR.LLL.GGG.00.01
BACKUP HOP ADDR2? (FOR NODE USE)		7.RRR.LLL.GGG.00.01
POLL ID? (FOR COLLECTOR USE)		1-99
MODE? (FOR COLLECTOR USE)		GEN/ATCS, GENISYS
WAMS/XID? (FOR COLLECTOR USE)		ENABLED, DISABLE
OFFICE COMM. DEVICE? (FOR COLLECTOR USE)		DIRECT (RS232) WCN (RS232) WCN (ECHELON) SREAD SPEC (ECHELON) DIAL MODEM (RS232) S200 RADIO (RS422)
OFFICE PHONE NUMBER? (FOR COLLECTOR USE)		PHONE NUMBER OF WAMS
INIT STRING? (FOR COLLECTOR USE)		OPTIONAL HAYES MODEM INITIALIZATION STRING
FIELD COMM. DEVICE?		VHF COMM. (ECHELON) VHF COMM. (RS232) SPREAD SPEC (ECHELON) SPREAD SPEC (RS232)
USER PORT?	57600, 8, N, 1, N	BAUD, DATA BITS, PARITY, STOP BITS, FLOW CONTROL
AUX PORT?	9600, 8, N, 1, N	BAUD, DATA BITS, PARITY, STOP BITS, FLOW CONTROL

YOU WILL NOW SEE A MESSAGE "PLEASE WAIT COMPILING STAGE 1"
CONTINUE TO NEXT PROGRAM MENU QUESTIONS.

STAGE 2

QUESTION	PROGRAM	SELECTION 1 (MINIMUM)	SELECTION 2 (MAXIMUM)	CONDITION FOR MENU DISPLAY	
RESET NAMES / MODULES ?	NO	YES	NO	ALWAYS	
RAILROAD NUMBER ?	360 (IC)	1	999	ALWAYS	
CROSSING CONFIGURATION	NORMAL	NORMAL	SPLIT GATE (NOTE 2)	ALWAYS	
ENTRANCE GATES ?	2	0	8	ALWAYS	
GATE POSTION FAIL TIME (SECONDS) ?	N/A	10	60	GATES > 0	
BATTERY BANKS ?	2	1	3	ALWAYS	
BATT MON USED ?	NO	NO	YES	ALWAYS	
INTERNAL CROSSING CONTROLLERS ?	2	0	2	ALWAYS	
EXTERNAL CROSSING CONTROLLERS ?	0	0	2	CROSSING CONTROLLER = YES	
VHF COMMUNICATOR ?	YES	YES	NO	ALWAYS	
DTMF ACTIVATION?	NO	NO	YES	RAILROAD = 360 (IC)	
ACTIVATION CODE ?	N/A	1	999	VHF COMMUNICATOR = YES	
ACTIVATION TIMEOUT ?	N/A	1	600	VHF COMMUNICATOR = YES	
ILOD MODULES ?	2	0	4	ALWAYS	
ANY LED BULBS USED ?	YES	NO	YES	ILOD MODULES > 0	
AUTO INSPECTION ?	NO	YES	NO	ALWAYS	
BELL SENSORS ?	1	0	8	ALWAYS	
BELL SENSORS TSS1 ?	YES	NO	YES	BELL SENSORS > 0	
BELL SENSORS TSS2 ?	NO	NO	YES	BELL SENSORS > 0	
BELL SENSORS TSS3 ?	NO	NO	YES	BELL SENSORS > 0	
BELL SENSORS TSS4 ?	NO	NO	YES	BELL SENSORS > 0	
BELL SENSORS TSS5 ?	NO	NO	YES	BELL SENSORS > 0	
BELL SENSORS TSS6 ?	NO	NO	YES	BELL SENSORS > 0	
BELL SENSORS TSS7 ?	NO	NO	YES	BELL SENSORS > 0	
BELL SENSORS TSS8 ?	NO	NO	YES	BELL SENSORS > 0	
BELL ON ?	GATES LOWERING	GATES LOWERING	GATES MOVING	BELL SENSORS > 0	
GFT'S ?	YES	YES	NO	ALWAYS	
BATTERIES ON GFT1 ?	2	1	2	GFT'S = YES	
GATE TIP SENSORS ?	YES	YES	NO	GATES > 0	
RTU ?	NO	NO	YES	ALWAYS	
VHF VOICE CHANNEL ?	1 (NOTE 1)	1	8	VHF COMMUNICATOR = YES	(VERIFY CHANNEL)
VHF DATA CHANNEL ?	1 (NOTE 1)	1	8	VHF COMMUNICATOR = YES	(VERIFY CHANNEL)
USE CELL MODEM NON-CRITICAL FEATURE ?	NO	NO	YES	ALWAYS	
FULL APPROACH MOVE ALARMS ?	ACTIVATE	ACTIVATE	DO NOT ACTIVATE	ALWAYS	

YOU WILL NOW SEE A MESSAGE "PLEASE WAIT COMPILING STAGE 2"
CONTINUE TO NEXT PROGRAM MENU QUESTIONS.

STAGE 3

PROGRAM MENU QUESTIONS	PROGRAM
EDIT DIGITAL INPUTS	NO
EDIT BATTERIES	NO
EDIT RELAYS	NO
EDIT TEST LEDS	NO
EDIT ILOD SENSORS	NO
EDIT VHF SETTINGS	NO
GCP4K ATCS SUBNODE?	16

SAVE CONFIGURATION

NOTES:

1) INDICATE SELECTION IN SPACE PROVIDED.
2) ADDITIONAL OPTIONS: DUAL CROSSING, EXTERNAL ENTRANCE GATE CONTROLLERS.

PROPOSED
DES. No. _____
RED-IN YELLOW-OUT
AS INSTALLED
DATE _____
BY _____

SEARIII EXECUTIVE 9V725 REV. A01U, SEARIII APPLICATION 9V864 REV. A01J

PROPOSED D	M	Y	REVISIONS	D	C	COMPLETED D	M	Y	C

REGION SOUTHERN
SUB. CHICAGO 340
SIGNALS AND COMMUNICATIONS HOMEWOOD
17 JUNE 2010
DES. SP
CH. MKN

GCP 4000/SEAR III
SETUP AND PROGRAM
2400N/TR 89
ASHKUM, IL

CHI-074.85-14

SAFETRAN SYSTEM CORP.
LOUISVILLE DIVISION, LOUISVILLE, KY

SAFETRAN SYSTEMS CORPORATION
DES.: SP DATE: 17/06/10 JOB NO.: PICA10235
CKD.: MKN ISSUE DATE: N/A EST. NO.: N/A
DRN.: SP PLAN NO.: N/A SHEET 14 OF 15
P TIME: 13:22 P DATE: 24-SEP-2010 CAD ID.: CHI-074.85-14

CHI-074.85-14.dgn
14-SEP-2010

$WATERMARK

REVISIONS				
NO.	DATE	BY	DESCRIPTION	APP. BY
1				
2				
3				
4				
5				

CALIBRATION HISTORY

INITIAL SET UP BY: _____ DATE: _____

DC VOLTAGE READINGS AFTER CALIBRATION				CALIBRATION HISTORY										LINEARIZATION HISTORY (NOTE 1)							
				EZ/EX VALUES (TRACK UNOCCUPIED)				HARD WIRE SHUNT AT TERMINATION SHUNT						HARD WIRE SHUNT AT 50 PERCENT POINT OF SHUNT							
				EZ		EX		EZ		EX		50 PERCENT OF EZ VALUE		NO LINEARIZATION				LINEARIZATION COMPLETE			
														EZ		EX		STEP±		EZ	
				NRML	STBY	NRML	STBY	NRML	STBY	NRML	STBY	NRML	STBY	NRML	STBY	NRML	STBY	NRML	STBY	NRML	STBY
T1	Z1=	NORTH	TRACK 1																		
	Z2=	SOUTH	TRACK 1	N/A	N/A	N/A	N/A	N/A	N/A	N/A	N/A	N/A	N/A	N/A	N/A	N/A	N/A	N/A	N/A	N/A	N/A
T2	Z1=	NORTH	TRACK 2	N/A	N/A	N/A	N/A	N/A	N/A	N/A	N/A	N/A	N/A	N/A	N/A	N/A	N/A	N/A	N/A	N/A	N/A
	Z2=	SOUTH	TRACK 2																		

CALIBRATION HISTORY

INITIAL SET UP BY: _____ DATE: _____

DC VOLTAGE READINGS AFTER CALIBRATION				CALIBRATION HISTORY										LINEARIZATION HISTORY (NOTE 1)							
				EZ/EX VALUES (TRACK UNOCCUPIED)				HARD WIRE SHUNT AT TERMINATION SHUNT						HARD WIRE SHUNT AT 50 PERCENT POINT OF SHUNT							
				EZ		EX		EZ		EX		50 PERCENT OF EZ VALUE		NO LINEARIZATION				LINEARIZATION COMPLETE			
														EZ		EX		STEP±		EZ	
				NRML	STBY	NRML	STBY	NRML	STBY	NRML	STBY	NRML	STBY	NRML	STBY	NRML	STBY	NRML	STBY	NRML	STBY
T1	Z1=	NORTH	TRACK 1																		
	Z2=	SOUTH	TRACK 1	N/A	N/A	N/A	N/A	N/A	N/A	N/A	N/A	N/A	N/A	N/A	N/A	N/A	N/A	N/A	N/A	N/A	N/A
T2	Z1=	NORTH	TRACK 2	N/A	N/A	N/A	N/A	N/A	N/A	N/A	N/A	N/A	N/A	N/A	N/A	N/A	N/A	N/A	N/A	N/A	N/A
	Z2=	SOUTH	TRACK 2																		

CALIBRATION HISTORY

INITIAL SET UP BY: _____ DATE: _____

DC VOLTAGE READINGS AFTER CALIBRATION				CALIBRATION HISTORY										LINEARIZATION HISTORY (NOTE 1)							
				EZ/EX VALUES (TRACK UNOCCUPIED)				HARD WIRE SHUNT AT TERMINATION SHUNT						HARD WIRE SHUNT AT 50 PERCENT POINT OF SHUNT							
				EZ		EX		EZ		EX		50 PERCENT OF EZ VALUE		NO LINEARIZATION				LINEARIZATION COMPLETE			
														EZ		EX		STEP±		EZ	
				NRML	STBY	NRML	STBY	NRML	STBY	NRML	STBY	NRML	STBY	NRML	STBY	NRML	STBY	NRML	STBY	NRML	STBY
T1	Z1=	NORTH	TRACK 1																		
	Z2=	SOUTH	TRACK 1	N/A	N/A	N/A	N/A	N/A	N/A	N/A	N/A	N/A	N/A	N/A	N/A	N/A	N/A	N/A	N/A	N/A	N/A
T2	Z1=	NORTH	TRACK 2	N/A	N/A	N/A	N/A	N/A	N/A	N/A	N/A	N/A	N/A	N/A	N/A	N/A	N/A	N/A	N/A	N/A	N/A
	Z2=	SOUTH	TRACK 2																		

NOTE:

1) **SET UP APPROACH LENGTH AND LINEARIZATION CALIBRATION**
VERIFY THAT "ENHANCED DETECTION" MODE IS PROGRAMMED "OFF" BEFORE ATTEMPTING LINEARIZATION PROCEDURES.

PROPOSED
DES. No. _____
RED-IN YELLOW-OUT
AS INSTALLED
DATE _____
BY _____

PROPOSED D	M	Y	REVISIONS	D	C	COMPLETED D	M	Y	C

REGION SOUTHERN
SUB. CHICAGO 340
CN

SIGNALS AND COMMUNICATIONS HOMEWOOD | DES. SP
17 JUNE 2010 | CH. MKN

GCP 4000
CALIBRATION HISTORY
2400N/TR 89
ASHKUM, IL

CHI-074.85-15

15

SAFETRAN SYSTEM CORP.
LOUISVILLE DIVISION, LOUISVILLE, KY

SAFETRAN SYSTEMS CORPORATION
DES. : SP | DATE: 17/06/10 | JOB NO. : PICA10235
CKD. : MKN | ISSUE DATE: N/A | EST. NO. :N/A
DRN. : SP | PLAN NO. :N/A | SHEET 15 OF 15
P TIME:13:22 | P DATE: 14-SEP-2010 | CAD ID. : CHI-074.85-15

CHI-074.85-15.dgn
14-SEP-2010

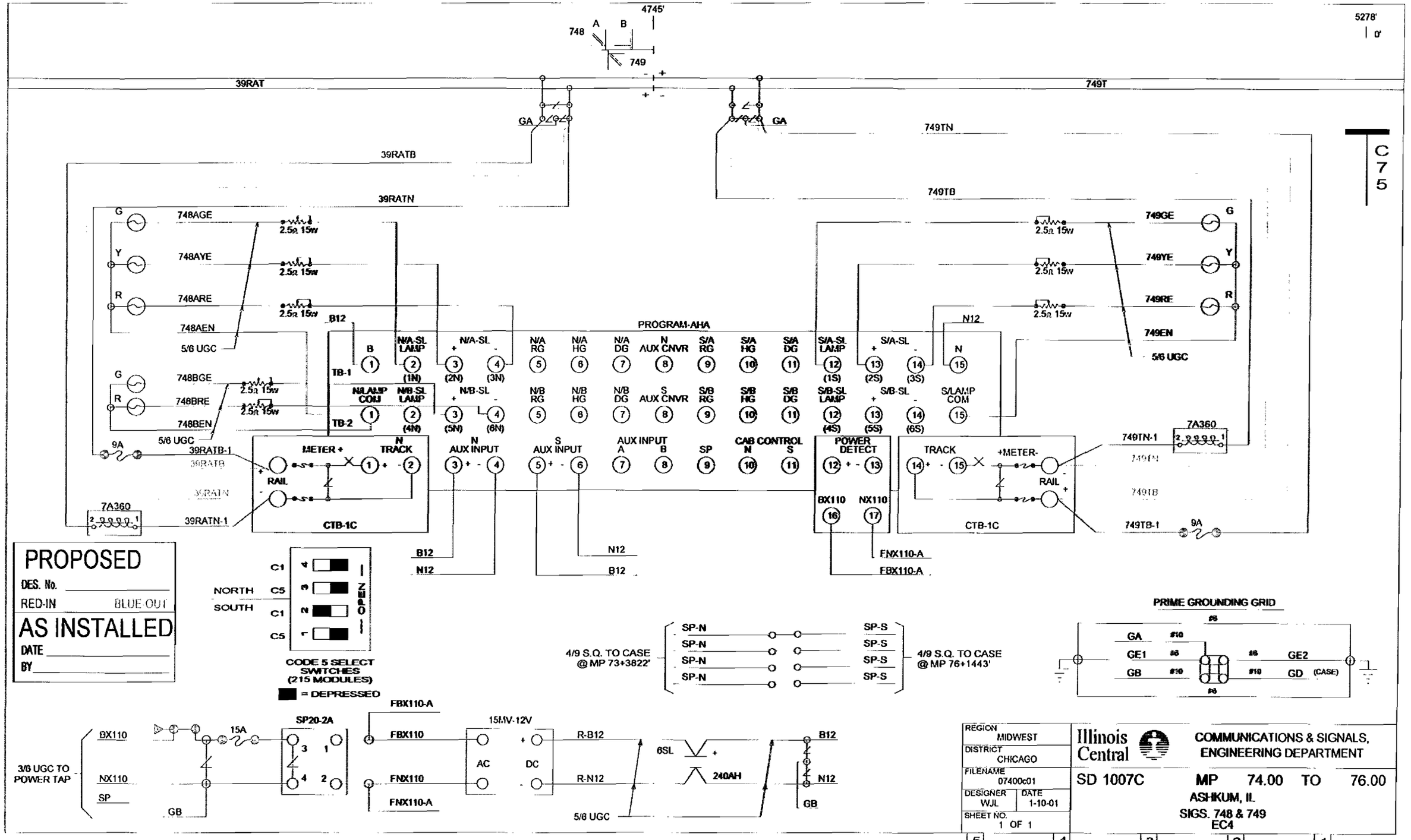
4745'
5278'
0'
748
749
A
B
39RAT
749T
GA
39RATB
39RATN
749TN
749TB
748AGE
748AYE
748ARE
748AEN
5/6 UGC
748BGE
748BRE
748BEN
2.5Ω 15W
749GE
749YE
749RE
749EN
PROGRAM-AHA
N/A-SL LAMP
N/A-SL
N/A RG
N/A HG
N/A DG
N AUX CNVR
S/A RG
S/A HG
S/A DG
S/A-SL LAMP
S/A-SL
N/B LAMP COM
N/B-SL LAMP
N/B-SL
N/B RG
N/B HG
N/B DG
S AUX CNVR
S/B RG
S/B HG
S/B DG
S/B-SL LAMP
S/B-SL
S/LAMP COM
TB-1
TB-2
B12
N12
39RATB-1
39RATN-1
7A360
9A
METER +
N TRACK
RAIL
CTB-1C
N AUX INPUT
S AUX INPUT
AUX INPUT A B
SP
CAB CONTROL N S
POWER DETECT
BX110
NX110
FNX110-A
FBX110-A
TRACK
+METER-
749TN-1
749TB-1
NORTH
SOUTH
C1
C5
ZERO
CODE 5 SELECT SWITCHES (215 MODULES)
= DEPRESSED
4/9 S.Q. TO CASE @ MP 73+3822'
4/9 S.Q. TO CASE @ MP 76+1443'
SP-N
SP-S
PRIME GROUNDING GRID
GA
GE1
GB
GE2
GD
(CASE)
#8
#10
3/8 UGC TO POWER TAP
BX110
NX110
SP
15A
SP20-2A
FBX110
FNX110
15MV-12V
AC
DC
R-B12
R-N12
6SL
240AH
B12
N12
GB
5/6 UGC
PROPOSED
DES. No.
RED-IN
BLUE-OUT
AS INSTALLED
DATE
BY
REGION MIDWEST
DISTRICT CHICAGO
FILENAME 07400c01
DESIGNER WJL
DATE 1-10-01
SHEET NO. 1 OF 1
Illinois Central
COMMUNICATIONS & SIGNALS, ENGINEERING DEPARTMENT
SD 1007C
MP 74.00 TO 76.00
ASHKUM, IL
SIGS. 748 & 749
EC4
4-19-94
REVISIONS
C75