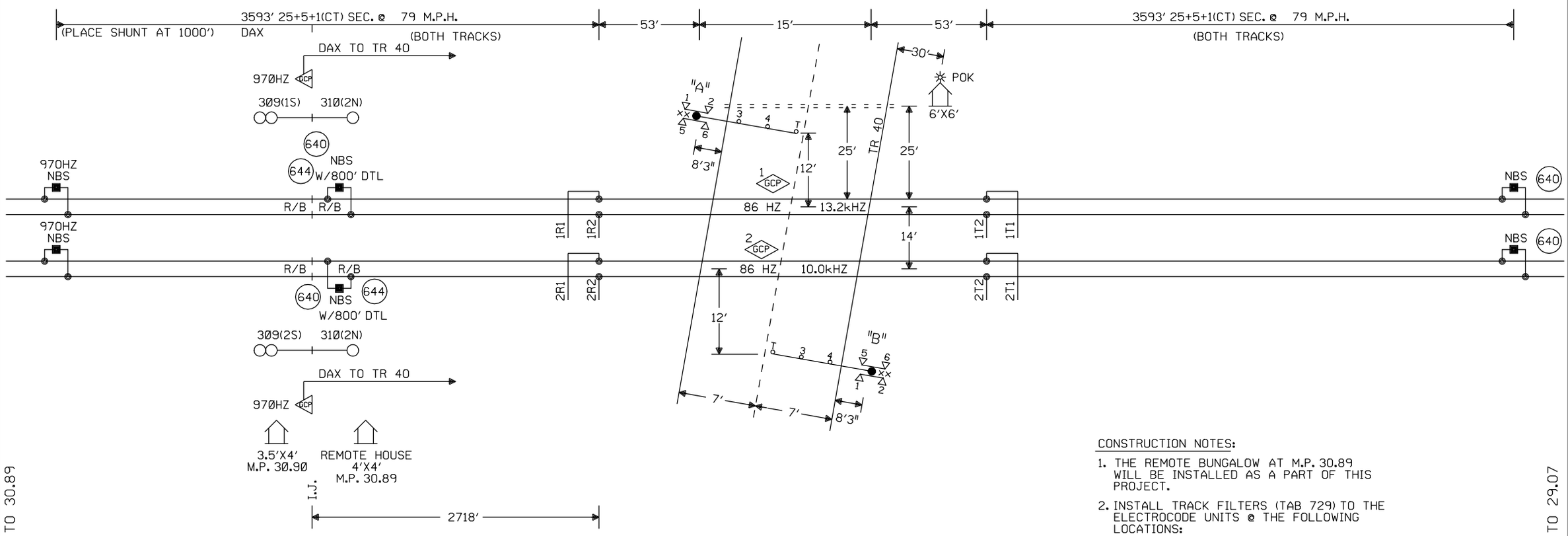

CONSTRUCTION NOTES:

1. THE REMOTE BUNGALOW AT M.P. 30.89 WILL BE INSTALLED AS A PART OF THIS PROJECT.
2. INSTALL TRACK FILTERS (TAB 729) TO THE ELECTROCODE UNITS @ THE FOLLOWING LOCATIONS:
   (2) 86 HZ - M.P. 29.07
   (2) 86 HZ - M.P. 30.90
3. 3,000' OF 5/4 CABLE NEEDED FOR 220 AC POWER TO REMOTE HOUSE.
4. ADD 2 EACH 393-6100 STOP SIGNS.

NOTES:

⊗ = TWISTED WIRES
INSULATED 1 TWIST PER FT.
ALL TRACK WIRES 2C. #6

TRANSMITTER AND RECEIVER LEADS TO BE SEPARATED BY AT LEAST 12" IN TRENCH, LENGTHS SHOULD NOT EXCEED MANUFACTURES RECOMMENDATION.

TOP OF FOUNDATION TO BE AT SAME ELEVATION AS THE SURFACE OF THE TRAVELED WAY & NO MORE THAN 4" ABOVE THE SURFACE OF THE GROUND.

ALL BUNGALOW WIRING TO BE #16 AWG FLEX UNLESS OTHERWISE SPECIFIED EXCEPT ALL GROUND WIRE TO BE #6 AWG FLEX OR LARGER.

ALL WIRING IN GATE MECHANISM TO BE #10 "AWG FLEX".

REFER TO UP STANDARD DWG FOR BUNGALOW GROUNDING.

PORTABLE GENERATOR EXTENSION CORD FOR 240V TO 240V IS PROVIDED AS WELL AS A 120V TO 240V ADAPTER.

ALL LIGHTS TO BE 12" ROUNDELS.

= = = = = = 4" X 30' CONDUIT

LIGHTS: LED LIGHTS

GATE A: 15'
GATE B: 15'

xx = BELL

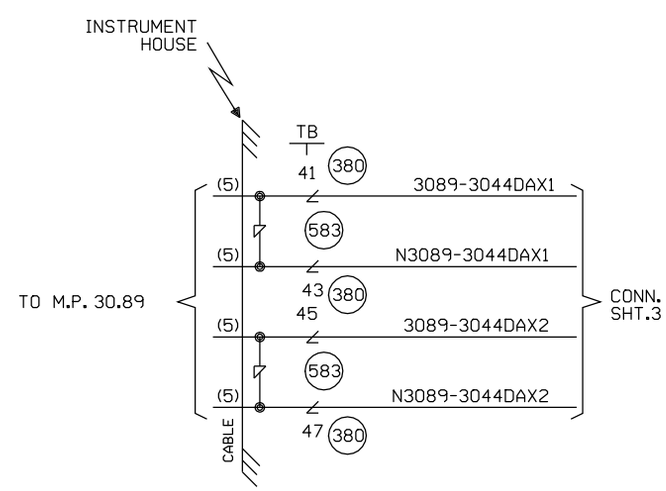

W(S) ← → E(N)

CABLE TABULATION

CABLE #5 7C #14 U.G.B.T. HOUSE TO M.P. 30.89

NEW SHEET

					Designed: 11/16/09 INSTALL FLASHERS, GATES AND CWT AT TR40 M.P. 30.44 Rec#: WO#: 02748 IS: /RLT / /NST/JTB	MODIFICATION LEVEL		UNION PACIFIC QUALITY PRODUCTIVITY SAFETY SIGNAL DESIGN	Date: 11/16/09	UNION PACIFIC RAILROAD	Sh.: 1
						Q. A. LAST LEVEL CHECKED	DS		Des: NST	MAEYSTOWN, ILLINOIS	DOT 436301C
						LAST LEVEL MOD THIS TYPICAL	DS		Chk: RLT	TR 40	MP: 30.44
						LAST LEVEL BY DESIGNER	DS		AFE: 02748	CHESTER SUBDIVISION	ID: 12753044.1X
						CHANGED FROM TYPICAL?	Y			Office of Sr AVP Engineering - Signal/TCO Omaha, Nebraska	
						REV 09.02.09 4K 2TKUGTYP.1					

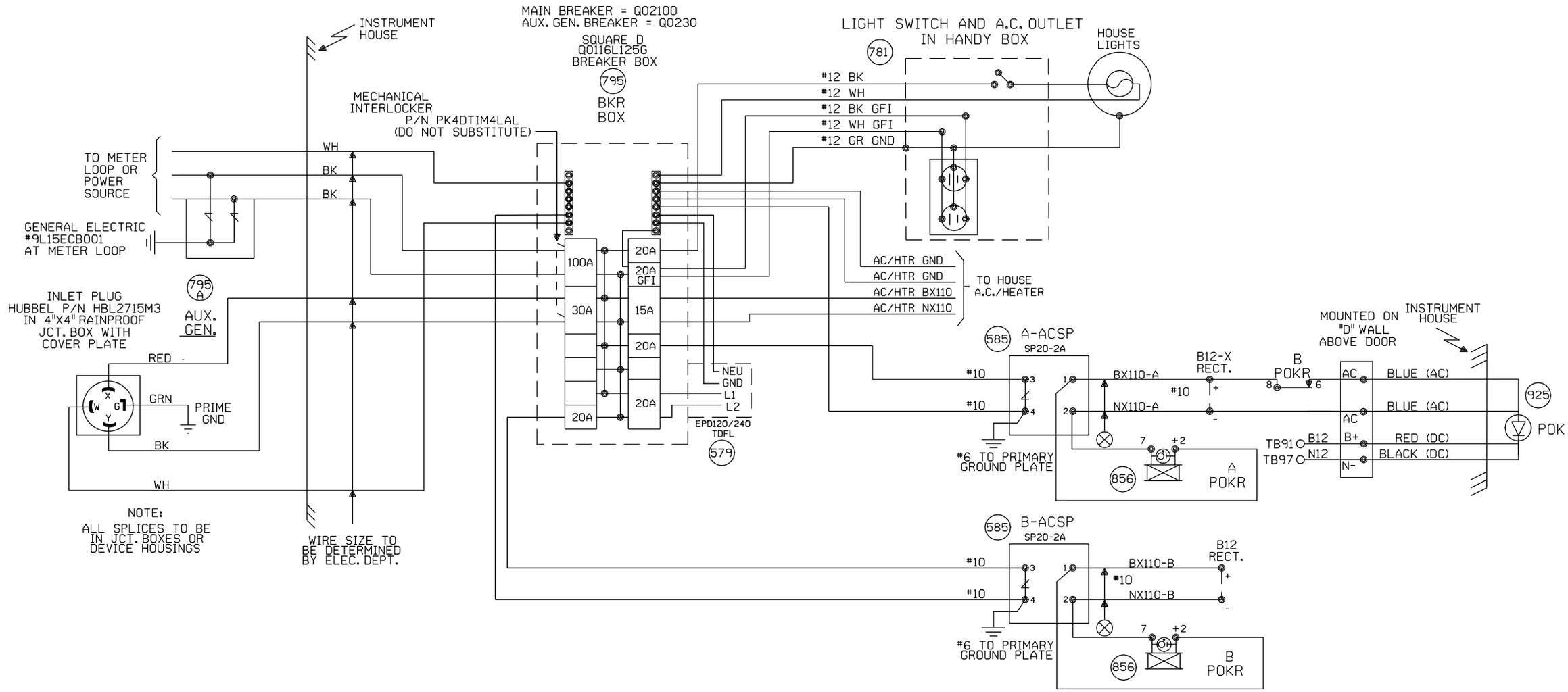

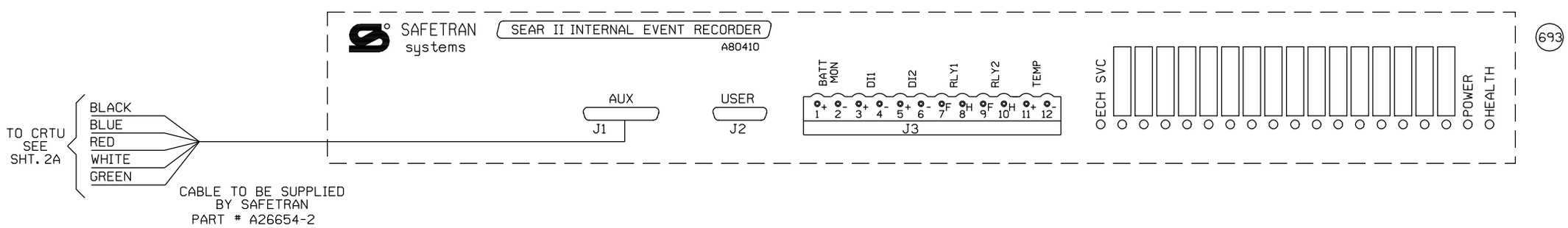

NEW SHEET

					Designed: 11/16/09 INSTALL FLASHERS, GATES AND CWT AT TR40 M.P. 30.44 Rec#: WO#: 02748 IS: /RLT / /NST/JTB	MODIFICATION LEVEL		UNION PACIFIC QUALITY PRODUCTIVITY SAFETY SIGNAL DESIGN	Date: 11/16/09	UNION PACIFIC RAILROAD	Sh.: 2
						Q. A. LAST LEVEL CHECKED	DS		Des: NST	MAEYSTOWN, ILLINOIS	DOT 436301C
						LAST LEVEL MOD THIS TYPICAL	DS		Chk: RLT	TR 40	MP: 30.44
						LAST LEVEL BY DESIGNER	DS		AFE: 02748	CHESTER SUBDIVISION	ID: 12753044.2X
						CHANGED FROM TYPICAL?	N			Office of Sr AVP Engineering - Signal/TCO Omaha, Nebraska	
						REV 09.02.09 4K SEARAC.2					

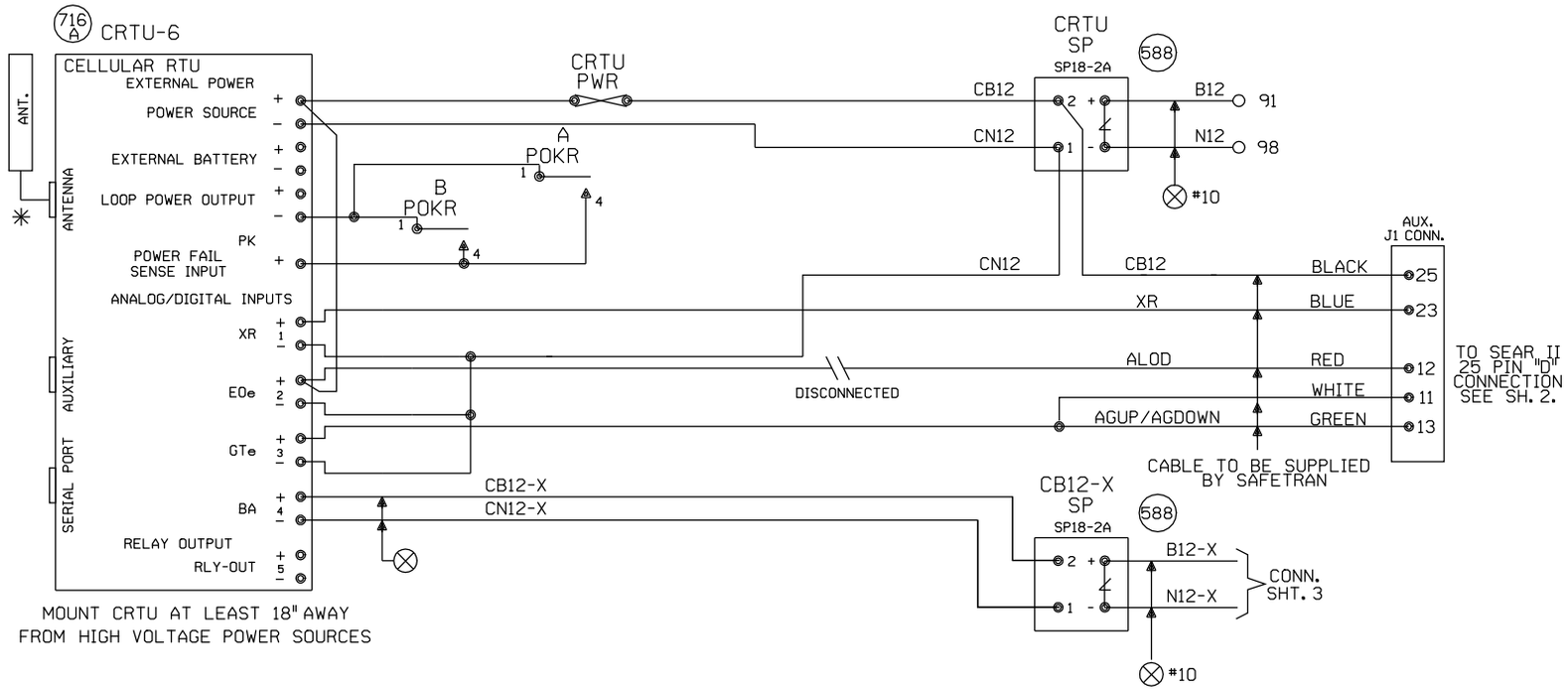

NOTES:

ALL DIODES 1N5060 OR 1N4004 UNLESS OTHERWISE NOTED.

✳ MOUNT ANTENNA ON TOP OF HOUSE.
INSTALL ANTENNA CABLE AND CHOKE PER TECH BULLENTIN #99-0015-00

ALL WIRES #18 UNLESS OTHERWISE NOTED.

ALL UNUSED 'NC' INPUTS MUST BE TIED HIGH TO BATTERY

ALL UNUSED ANALOG INPUTS MUST BE TIED HIGH TO BATTERY

ALL UNUSED 'NO' INPUTS MUST BE DISCONNECTED

NORMAL STATE FOR ANALOG CHANNELS IS EQUAL TO THE STORED NOMINAL VOLTAGE +120% OR -81%

CRTU FRONT PANEL DISPLAY CHART INDICATES NORMAL STATE

■ DIGITAL INPUT HIGH, OR POWER FAIL INPUT CLOSED □ DIGITAL INPUT LOW, OR POWER FAIL INPUT OPEN

■ L ← LATCH IS SET BECAUSE CRTU DETECTED AN ALARM CONDITION
12.06V L ←

'sRUN MODE' 'sRUN MODE-SILENT'
CRTU RADIO IS DISABLED. REPROGRAM CRTU WITH LAPTOP.

ANALOG AND AC INPUT MODULES AND SURGE PROTECTORS MUST BE MOUNTED LESS THAN 18" FROM CRTU

ANALOG MODULES CONVERT DC VOLTAGE TO A SQUARE WAVE. A WORKING ANALOG MODULE WILL HAVE 4.5VDC TO 8.0VDC BETWEEN 5VOUT+ AND 6VOUT-. WHERE, 0VOLTS = 0HZ OUT, 3OVOLTS = 10KHZ OUT, AND 15VOLTS = 5KHZ OUT
MAKE SURE CRTU IS PROGRAMMED WITH CALIBRATION SETTINGS.

CRTU CH4 CAN BE CONNECTED TO EITHER SP18 OR EQUIPMENT SIDE OF MDSA1, TAB 565

UNIT INSTALLATION AND SETUP

R.R. SITE ID WHERE; SSSS = 4 CHARACTER SUBDIVISION ID. FILL WITH PRECEDING ZEROS AS REQUIRED. THE MAIN TRACK SUBDIVISION ID* IS IN THE CURRENT TIMETABLE. INDUSTRIAL LEADS, LEASED, AND LEAD TRACKS LISTED WITHIN THE SUBDIVISION MAY HAVE THEIR OWN UNIQUE SUBDIVISION ID*. ALWAYS REFER TO CURRENT PRINTED COPY OF THE TIMETABLE.
LLLLLLLL = 8 CHARACTERS USE DOT* AT CROSSINGS, AND
WDLLLLLL = USE 'WD' THEN MP* AT WAYSIDE LOCATIONS.
EXAMPLE = 0785WD1801.5UT
HBLLLLLL = USE 'HB' THEN MP* AT HBD SITES.
EXAMPLE = 0100-HB55.62TX
THE MP* MUST USE A DECIMAL POINT TO SEPARATE NUMBERS. FILL WITH PRECEDING DASHES AS REQUIRED.
AA = 2 CHARACTER STATE NAME FOR ALL LOCATIONS. MUST BE 14 CHARACTERS LONG, NO SPACES ALLOWED.

SITE IDENTIFIER: SSSSLLLLLLLLAA	0060436301CIL
OPERATION TO RESUME: RUN	
SIGNAL STRENGTH dBm	
CARRIER ID	
FIRMWARE VERSION	2.3.
SERIAL NUMBER	
BOOT VERSION:	
CMM VERSION:	
MIN ASSIGNMENT	
ESN: (MICROBURST ONLY)	
CONFIGURATION NET	
SILENCE INTERVAL	60 MINUTES
HEALTHCHECK INTERVAL	EVERY 2 DAYS
ALARM DEFER DELAY	240 MINUTES (4 HOURS)
SIGNAL STATUS	
SCADANET STATUS	
CALIBRATION CONSTANT CH1	
CALIBRATION CONSTANT CH2	
CALIBRATION CONSTANT CH3	
CALIBRATION CONSTANT CH4	
CALIBRATION CONSTANT PS	

FIELD PROVIDES: SAMPLED NOMINAL VOLTAGES, SCADANET STATUS CALIBRATION CONSTANTS, SERIAL NUMBER, AND SIGNAL STATUS.

CHANNEL SETUP - STANDARD CONFIGURATION 32:XR,EOe,GTe,Ba

CHANNEL NORMAL STATE	SENSE (NO/NC)	NAME FUNCTION	RECOGNITION DELAY SECONDS ACTIVE	RECOGNITION DELAY SECONDS NORMAL	RETURN TO NORMAL	REPORTING MODE	ALARM LINKED CHANNEL	ALARM LINKED CRITERIA	EVENT LOGGING ENABLED OPTIONS
POWER FAIL (CH5) ■	POWER FAIL DETECT NO	PF1n-PK AC POWER FAIL	7,200 ALARM	300 NORMAL	ENABLED	ALERT	DISABLED	N/A	
CH1 ■	DIGITAL INPUT NC	CH1-XR XR DOWN TO LONG	1,800 ALARM	1 NORMAL	ENABLED	ALERT	DISABLED	N/A	ANALOG VALUE SENT
CH2 □	DIGITAL INPUT NO	CH2-EOe LIGHT OUT	120 ALARM	10 NORMAL	ENABLED	ALERT	DISABLED	N/A	
CH3 □	DIGITAL INPUT NO	CH3-GTe GATES NOT UP/DOWN	120 ALARM	10 NORMAL	ENABLED	ALERT	DISABLED	N/A	
CH4 STORED NOMINAL VOLTAGE	ANALOG INPUT N/A	CH4-Ba/V BATTERY MONITOR BATTERY LOW	600 ALARM	1200 NORMAL	ENABLED	ALERT W/UPDATE	DISABLED	N/A	DIGITAL EVENTS
POWER SOURCE (CH6)	ANALOG INPUT N/A	PS-Ba/V BATTERY MONITOR BATTERY LOW	600 ALARM	1200 NORMAL	ENABLED	ALERT W/UPDATE	DISABLED	N/A	PF1n-PK CH1-XR CH2-EOe CH3-GTe

ANALOG CHANNEL	USEFUL RANGE VOLTS LOW	USEFUL RANGE VOLTS HIGH	DISPLAYED RANGE VOLTS LOW	DISPLAYED RANGE VOLTS HIGH	RELATIVE ALARM POINT LOW	RELATIVE ALARM POINT HIGH	ABSOLUTE ALARM POINT LOW	ABSOLUTE ALARM POINT HIGH	AUTOMATIC UPDATE INTERVAL	STORED NOMINAL VOLTAGE	SAMPLED NOMINAL VOLTAGE
CH4	0.0	30.00	0.0	30.00	81%	120%	10.0	29.0	14 DAYS	12.69	
POWER SOURCE	0.0	30.00	0.0	30.00	81%	120%	10.0	29.0	14 DAYS	12.69	
RELAY OUTPUT	NAME RLY-OUT		ACTIVE SET-UP-OPEN		NORMAL CLR-DN-CLOSE		PULSE DURATION		15 SECONDS	StdCfg Ver: 2.3.3 REV'D 9-20-02	

MAINTENANCE OPERATIONS

TO START OR ABORT ANY PROCEDURE

1. PRESS THE 'CANCEL' BUTTON FIRST

WHEN RESPONDING TO A CALL, PUT THE CRTU IN THE 'SILENCE ALARMS' MODE

1. PRESS 'SELECT' AND THEN '+ ARROW' BUTTON UNTIL
   DISPLAY: ACTION?
   SILENCE ALARMS
2. PRESS THE 'SELECT' BUTTON TWICE
3. CORRECT PROBLEM AND SIMULATE NORMAL TRAIN MOVEMENT THROUGH THE LOCATION
4. EXAMINE EACH CHANNEL ON THE CRTU
5. PRESS THE '+/- ARROW' BUTTON
   VERIFY ALL CHANNELS INDICATE A NORMAL STATE
NORMAL STATES ARE ON THE CHANNEL SETUP CHART

CLEAR TIMERS, LATCHES AND SEND ALL NORMAL

1. DO STEPS #1 - #5 ABOVE, AND PRESS 'CANCEL'.
2. PRESS 'SELECT' AND THEN '- ARROW' BUTTON UNTIL
   DISPLAY: ACTION?
   SERVICE MODE
3. PRESS 'SELECT' AGAIN TO RESET TIMERS, AND IF
   DISPLAY: SERVICE MODE
   ALL NORMAL
4. PRESS 'SELECT' AGAIN TO CLEAR LATCHES, AND SEND ALL NORMAL. SKIP STEPS #5-#6.
5. HOWEVER, IF ALARMS ARE NOT CLEARED;
   DISPLAY: SERVICE MODE
   ALARMS PENDING/PRESENT
6. PRESS 'CANCEL', CORRECT PROBLEM AND REPEAT STEPS #2 THRU #5 UNTIL ALL NORMAL SENT.

TO CANCEL THE 'SILENCE ALARMS' MODE

1. PRESS 'SELECT' AND THEN '+ ARROW' BUTTON UNTIL
   DISPLAY: ACTION?
   CANCEL SILENCE
2. PRESS THE 'SELECT' BUTTON AGAIN

EXAMINE & SET BATTERY VOLTAGE NOMINAL VALUE

1. PRESS THE '+ ARROW' OR '- ARROW' BUTTON UNTIL THE DESIRED CHANNEL IS DISPLAYED.
   DISPLAY: PS-BA:
   13.83V NORMAL
2. VERIFY THE DISPLAYED READING WITH A DIGITAL VOLTMETER
3. PRESS THE 'SELECT' BUTTON, AND THE CRTU DISPLAY WILL SWITCH BETWEEN CURRENT/SAVED NOMINAL VOLTAGE VALUES.
   DISPLAY: NOMINAL ON #6? (CURRENT)
   13.83
   DISPLAY: SAVED NOMINAL 6 (STORED)
   12.69
4. PRESS THE 'SELECT' BUTTON AND THE CURRENT OR 'NOMINAL ON' VALUE WILL BE SAMPLED AND STORED AS THE 'SAVED NOMINAL' VALUE
5. VERIFY THE 'NOMINAL ON' AND 'SAVED NOMINAL' VALUES ARE EQUIVALENT, REPEAT STEPS #1 THRU #3 & PRESS THE 'CANCEL' BUTTON.

NEW SHEET

Designed: 11/16/09
INSTALL FLASHERS, GATES AND CWT AT TR40 M.P. 30.44
Rec#: WO#: 02748 /RLT
IS: / /NST/JTB

MODIFICATION LEVEL	
Q.A. LAST LEVEL CHK'D.	DJ
LAST LEVEL MOD. THIS TYP.	DJ
LAST LEVEL BY DESIGNER.	DS
CHANGED FROM TYP.? Y/N	Y

UNION PACIFIC
QUALITY PRODUCTIVITY SAFETY
SIGNAL DESIGN

Date: 11/16/09
Des: NST
Chk: RLT
AFE: 02748

UNION PACIFIC RAILROAD
MAEYSTOWN, ILLINOIS
TR 40
CHESTER SUBDIVISION
Office of Sr AVP Engineering - Signal/TCO Omaha, Nebraska

Sh.: 2A
DOT 436301C
MP: 30.44
ID: 12753044.2AX

(REV.06.01.04) (CRTUCFG32-2BAT.3)

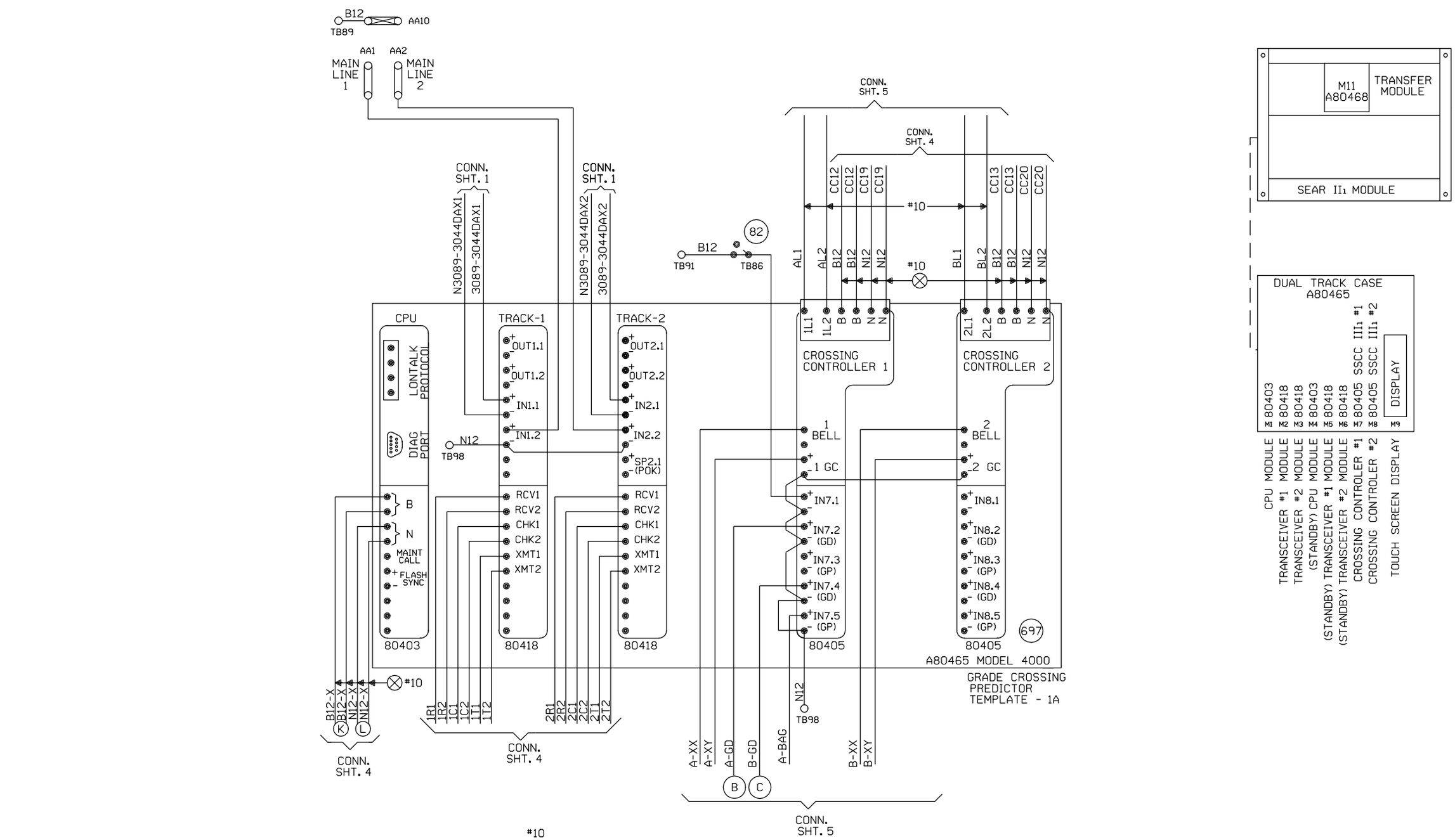

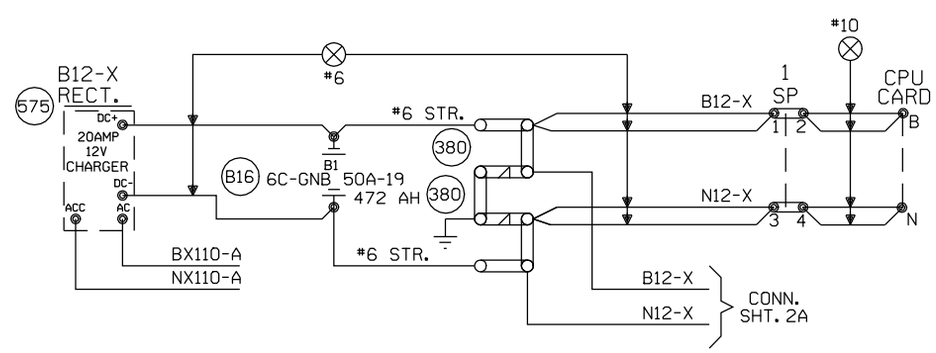

"Mf" FREQUENCY (HZ)	MAXIMUM TRANSMIT WIRE LENGTH (FEET)
86	100
114	125
156	150
211	200
285-970	250

NOTE:
EACH TRANSMITTER TO RAIL WIRE FROM XMT1 AND XMT2 MUST NOT EXCEED THE MAXIMUM LENGTH SPECIFIED IN THE TABLE SHOWN. THE RECEIVER WIRE LENGTH IS NOT CRITICAL. DOES NOT APPLY TO 6 TRACK WIRE APPLICATION.

NEW SHEET

Designed: 11/16/09
INSTALL FLASHERS, GATES AND CWT AT TR40 M.P. 30.44
Rec#: WO#: 02748
IS: /RLT /NST/JTB

MODIFICATION LEVEL	
Q. A. LAST LEVEL CHECKED	DS
LAST LEVEL MOD THIS TYPICAL	DS
LAST LEVEL BY DESIGNER	DS
CHANGED FROM TYPICAL?	Y

REV 09.02.09 4K 2TKGF.3

UNION PACIFIC
QUALITY PRODUCTIVITY SAFETY
SIGNAL DESIGN

Date: 11/16/09
Des: NST
Chk: RLT
AFE: 02748

UNION PACIFIC RAILROAD
MAEYSTOWN, ILLINOIS
TR 40
CHESTER SUBDIVISION
Office of Sr AVP Engineering - Signal/TCO Omaha, Nebraska

Sh.: 3
DOT 436301C
MP: 30.44
ID: 12753044.3X

Minimum Program Steps Report

Location and SIN

DOT Number: 436301C
Milepost Number: 30.44
Site Name: Maeystown, IL

SIN: 762010010016 *

* Parameter is part of office check number calculation.

MCF and Template Selection

MCF Name: GCP-T6X-02-1.mcf
MCF Revision: 021
MCFCRC: 6076E435

Template = 1A:6 Trk Bi *

* Parameter is part of office check number calculation.

Minimum Program Steps

TEMPLATE: module configuration
Track 2/RIO 1 Slot = Track *

TEMPLATE: track 1-Bi, Island
Track 1 : GCP Frequency = 86 Hz
Track 1 : Approach Distance = 3593 ft
Track 1 : Prime Warning Time = 26 sec
Track 1 : Prime UAX = IP *
Track 1 : Prime UAX Pickup = 15 sec *
Track 1 : GCP Transmit Level = Medium (Set in Field)
Track 1 : Isl Frequency = 13.2 kHz

TEMPLATE: track 2-Bi, Island
Track 2 : GCP Frequency = 86 Hz
Track 2 : Approach Distance = 3593 ft
Track 2 : Prime Warning Time = 26 sec
Track 2 : Prime UAX = IP *
Track 2 : Prime UAX Pickup = 15 sec *
Track 2 : GCP Transmit Level = Medium (Set in Field)
Track 2 : Isl Frequency = 10.0 kHz

TEMPLATE: AND 1 XR
AND 1 Enable Used = Yes *

TEMPLATE: SSCC
SSCC 1 : Lamp Neutral Test = Off (Set in Field)
SSCC 2 : Lamp Neutral Test = Off (Set in Field)

TEMPLATE: OOS
OOS Control = OOS IPs *

TEMPLATE: IP assignment 1
IN 1.1 = T1 Prime UAX *
IN 1.2 = Out Of Service IP 1 *
IN 2.1 = T2 Prime UAX *
IN 2.2 = Out Of Service IP 2 *

TEMPLATE: IP assignment SSCC
IN 7.1 = AND 1 XR Enable *

* Parameter is part of office check number calculation.

Check Numbers

Office Check No. (DT 4.6.0): 5054552C
Office Check Number: 5054552C
Config. Check Number: 52C4F4BD
(Based on MCF Revision 021)

Parameters not part of office check number calculation:

Track 1 : GCP Frequency = 86 Hz
Track 1 : Approach Distance = 3593 ft
Track 1 : Prime Warning Time = 26 sec
Track 1 : GCP Transmit Level = Medium (Set in Field)
Track 1 : Isl Frequency = 13.2 kHz
Track 2 : GCP Frequency = 86 Hz
Track 2 : Approach Distance = 3593 ft
Track 2 : Prime Warning Time = 26 sec
Track 2 : GCP Transmit Level = Medium (Set in Field)
Track 2 : Isl Frequency = 10.0 kHz
SSCC 1 : Lamp Neutral Test = Off (Set in Field)
SSCC 2 : Lamp Neutral Test = Off (Set in Field)

Comments

<none>

Configuration Package File

Filename: 12753044 436301C.pac
Path: H:\UP\Xings\Projects\TR 40 21-267-0\PAC Files\PAC FILES 30.44\
Date/Time: 5/24/2010 14:49:00

NEW SHEET

Designed: 11/16/09
INSTALL FLASHERS, GATES AND CWT AT TR40 M.P. 30.44
Req#: WO#: 02748
IS: /RLT /NST/JTB

NOTE: Actual OFFSET and ISLAND distances must be verified by field personnel.

UNION PACIFIC
QUALITY PRODUCTIVITY SAFETY
SIGNAL DESIGN

Date:	11/16/09
Des:	NST
Chk:	RLT
AFE:	02748

UNION PACIFIC RAILROAD
MAEYSTOWN, ILLINOIS
TR 40
CHESTER SUBDIVISION
Office of Sr AVP Engineering - Signal/TCO Omaha, Nebraska

Sh.:	3A
DOT	436301C
MP:	30.44
ID:	12753044.3AX

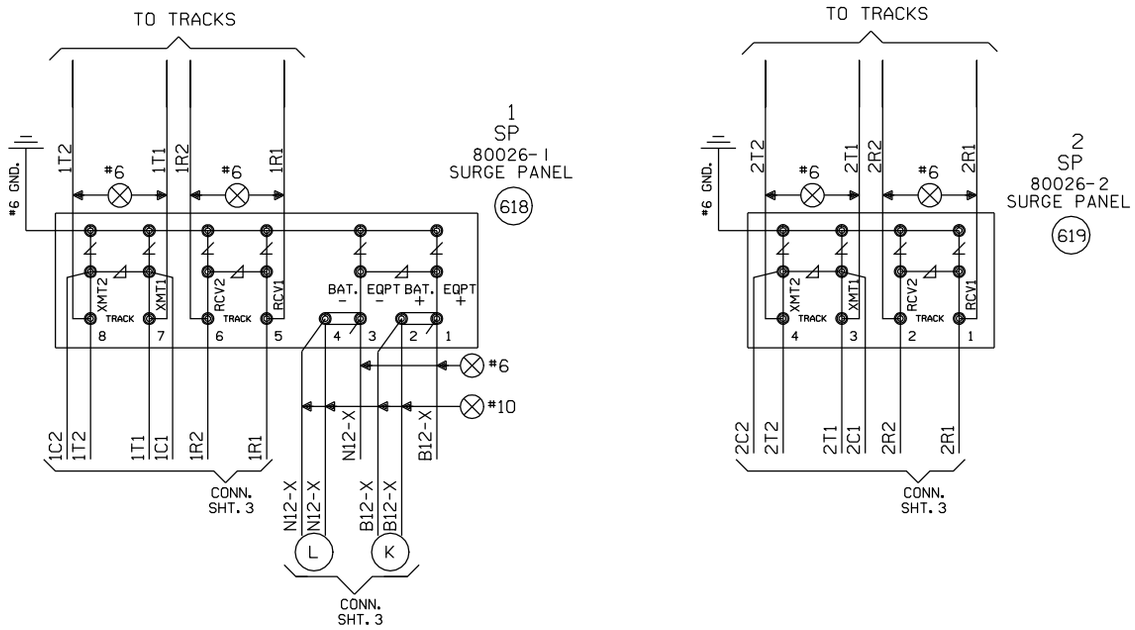

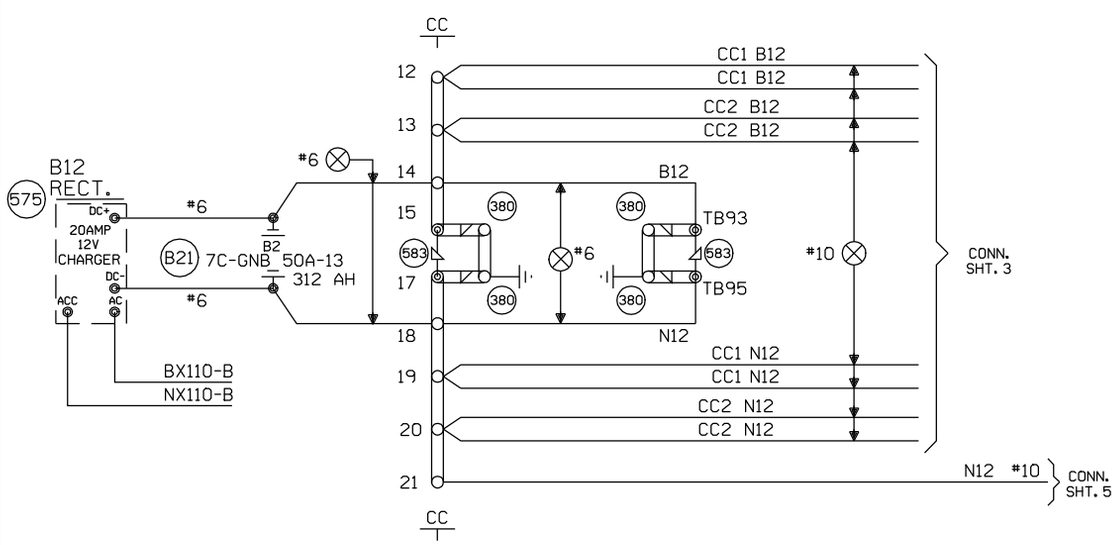

NEW SHEET

Designed: 11/16/09 INSTALL FLASHERS, GATES AND CWT AT TR40 M.P. 30.44 Rec#: WO#: 02748 IS: /RLT / /NST/JTB	MODIFICATION LEVEL		UNION PACIFIC QUALITY PRODUCTIVITY SAFETY SIGNAL DESIGN	Date: 11/16/09 Des: NST Chk: RLT AFE: 02748	UNION PACIFIC RAILROAD MAEYSTOWN, ILLINOIS TR 40 CHESTER SUBDIVISION Office of Sr AVP Engineering - Signal/TCO Omaha, Nebraska
	Q. A. LAST LEVEL CHECKED	DS			
	LAST LEVEL MOD THIS TYPICAL	DS			
	LAST LEVEL BY DESIGNER	DS			
	CHANGED FROM TYPICAL?	Y			
	REV 09.02.09 4K 4TKSPGFC.4				

Sh.:	4
DOT	436301C
MP:	30.44
ID:	12753044.4X

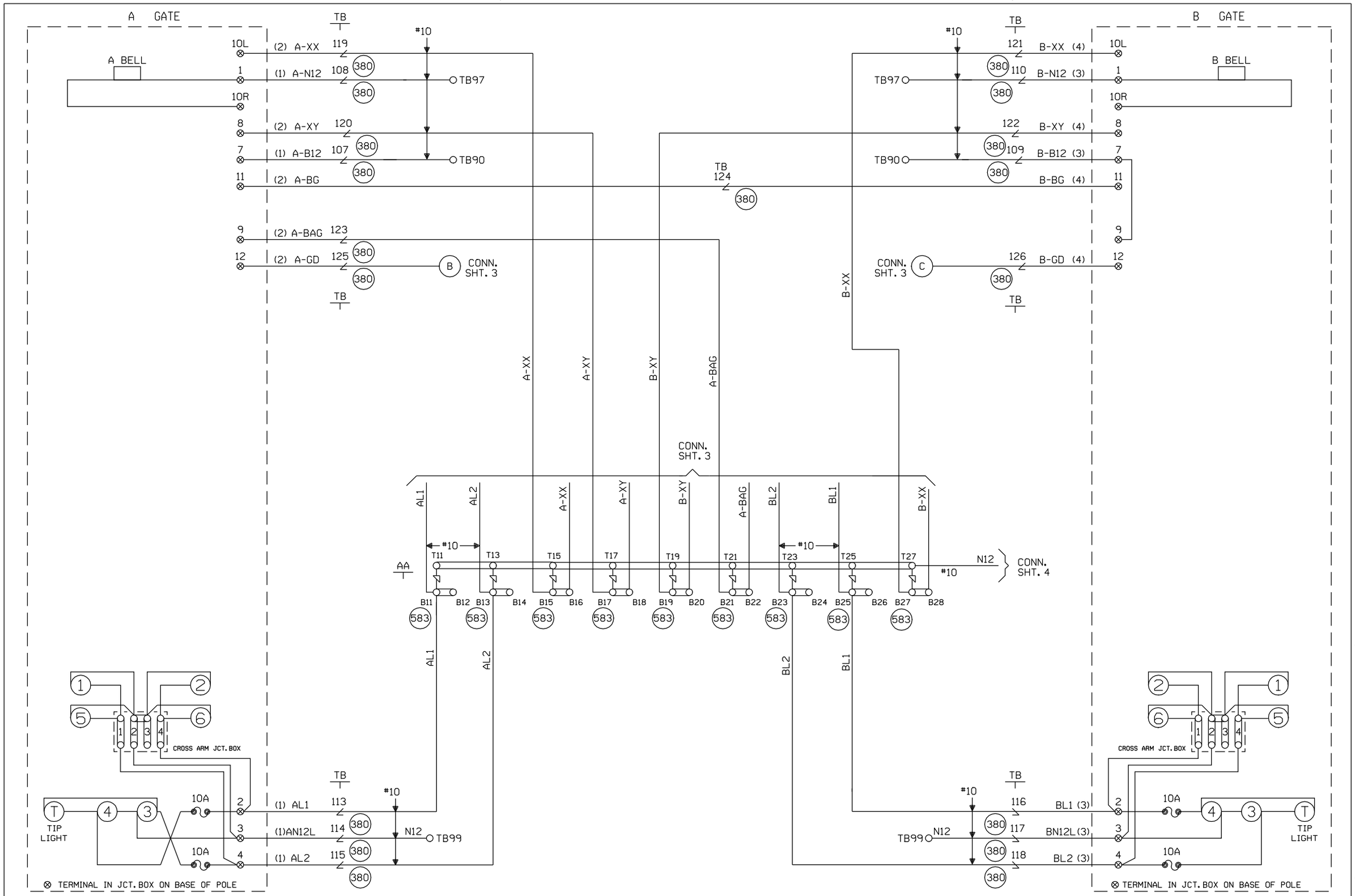

CABLE TABULATION

CABLE NO. 1 5C. NO.6 U.G.B.T. TO GATE A
CABLE NO. 2 7C. NO.14 U.G.B.T. TO GATE A
CABLE NO. 3 5C. NO.6 U.G.B.T. TO GATE B
CABLE NO. 4 7C. NO.14 U.G.B.T. TO GATE B

NEW SHEET

Designed: 11/16/09
INSTALL FLASHERS, GATES AND CWT AT TR40 M.P. 30.44
Rec#: WO#: 02748
IS: /RLT
/ /NST/JTB

MODIFICATION LEVEL	
Q. A. LAST LEVEL CHECKED	DS
LAST LEVEL MOD THIS TYPICAL	DS
LAST LEVEL BY DESIGNER	DS
CHANGED FROM TYPICAL?	Y

REV 09.02.09 4K GFCTYP.5

UNION PACIFIC
QUALITY PRODUCTIVITY SAFETY
SIGNAL DESIGN

Date: 11/16/09
Des: NST
Chk: RLT
AFE: 02748

UNION PACIFIC RAILROAD
MAEYSTOWN, ILLINOIS
TR 40
CHESTER SUBDIVISION
Office of Sr AVP Engineering - Signal/TCO Omaha, Nebraska

Sh.: 5
DOT 436301C
MP: 30.44
ID: 12753044.5X

WCH 3593-E

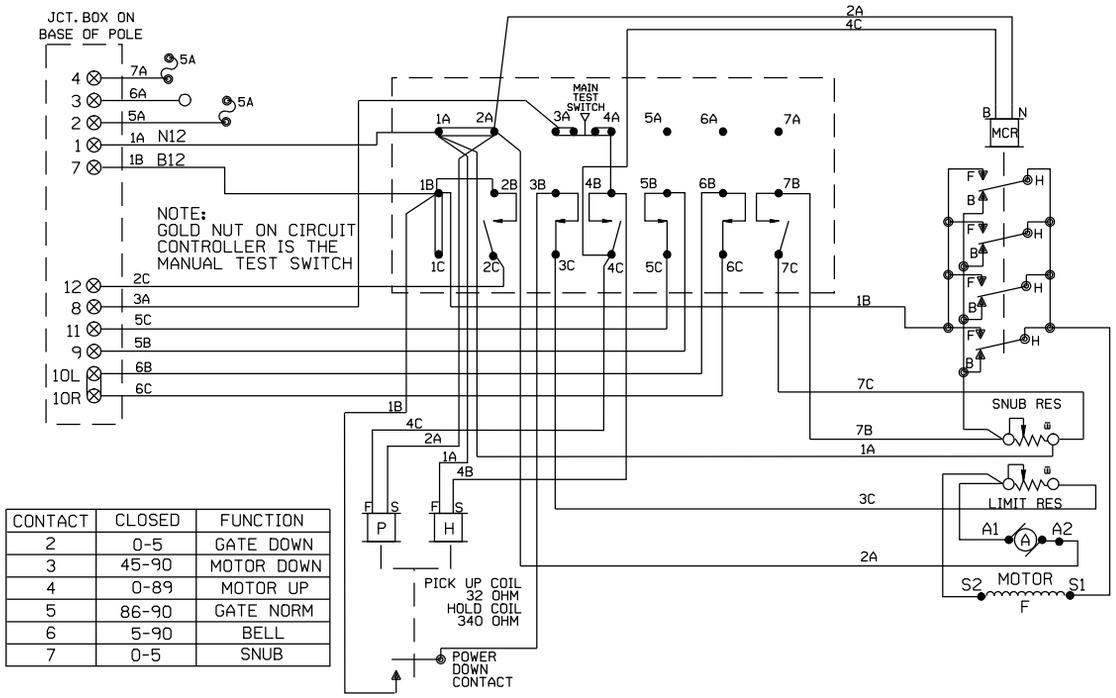

CONTACT	CLOSED	FUNCTION
2	0-5	GATE DOWN
3	45-90	MOTOR DOWN
4	0-89	MOTOR UP
5	86-90	GATE NORM
6	5-90	BELL
7	0-5	SNUB

WCH 3597-E

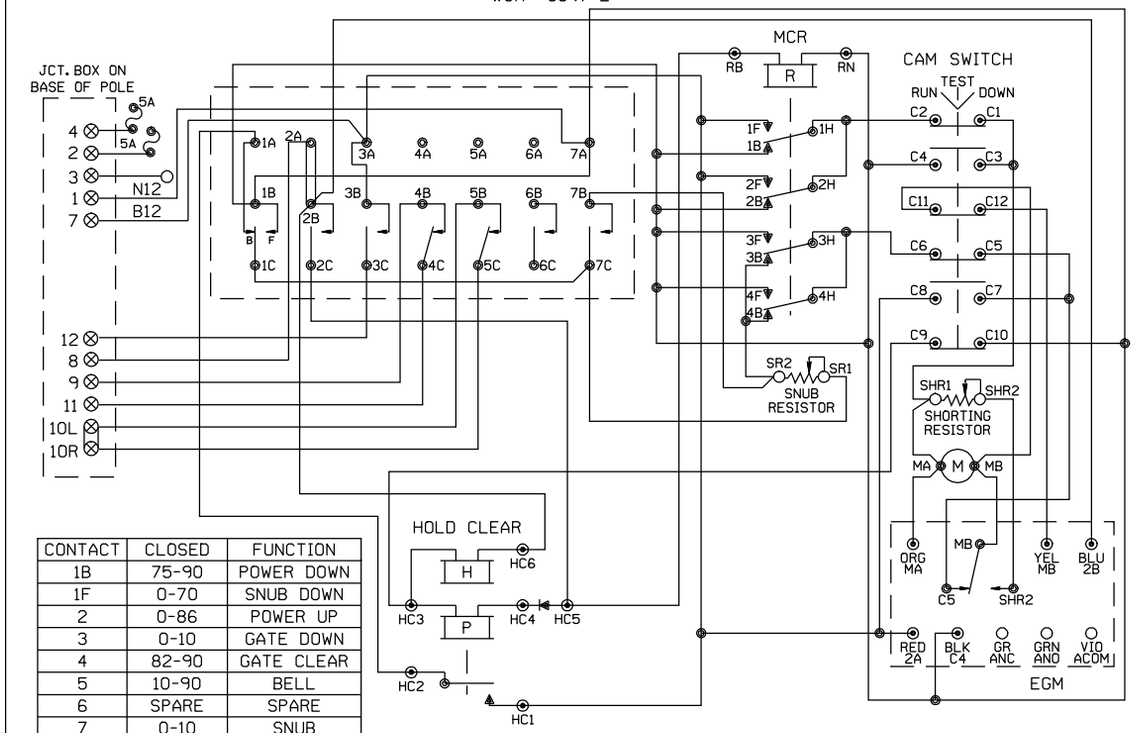

CONTACT	CLOSED	FUNCTION
1B	75-90	POWER DOWN
1F	0-70	SNUB DOWN
2	0-86	POWER UP
3	0-10	GATE DOWN
4	82-90	GATE CLEAR
5	10-90	BELL
6	SPARE	SPARE
7	0-10	SNUB

WCH 3597-RB

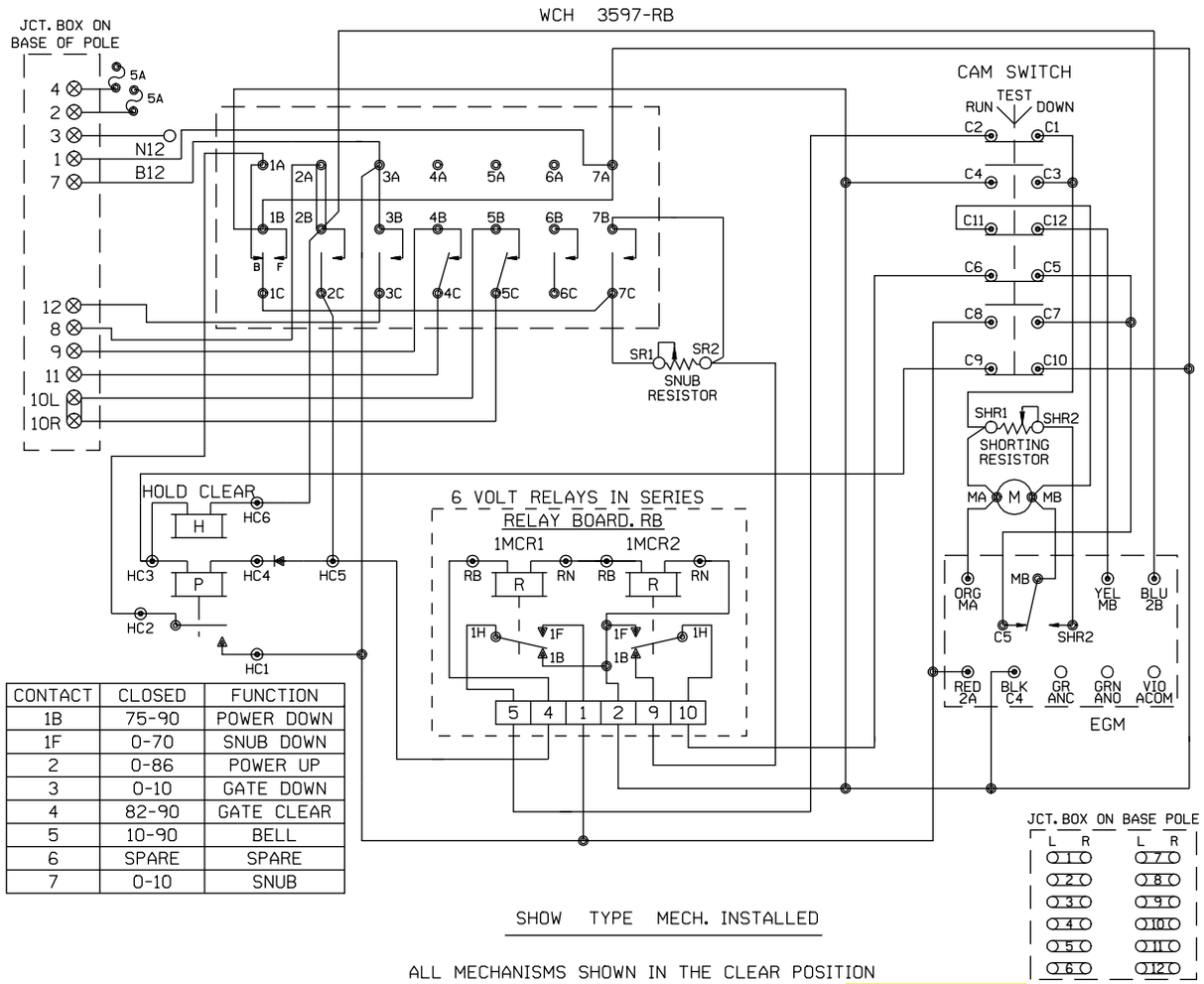

CONTACT	CLOSED	FUNCTION
1B	75-90	POWER DOWN
1F	0-70	SNUB DOWN
2	0-86	POWER UP
3	0-10	GATE DOWN
4	82-90	GATE CLEAR
5	10-90	BELL
6	SPARE	SPARE
7	0-10	SNUB

SHOW TYPE MECH. INSTALLED

ALL MECHANISMS SHOWN IN THE CLEAR POSITION

SAFETRAN S-60

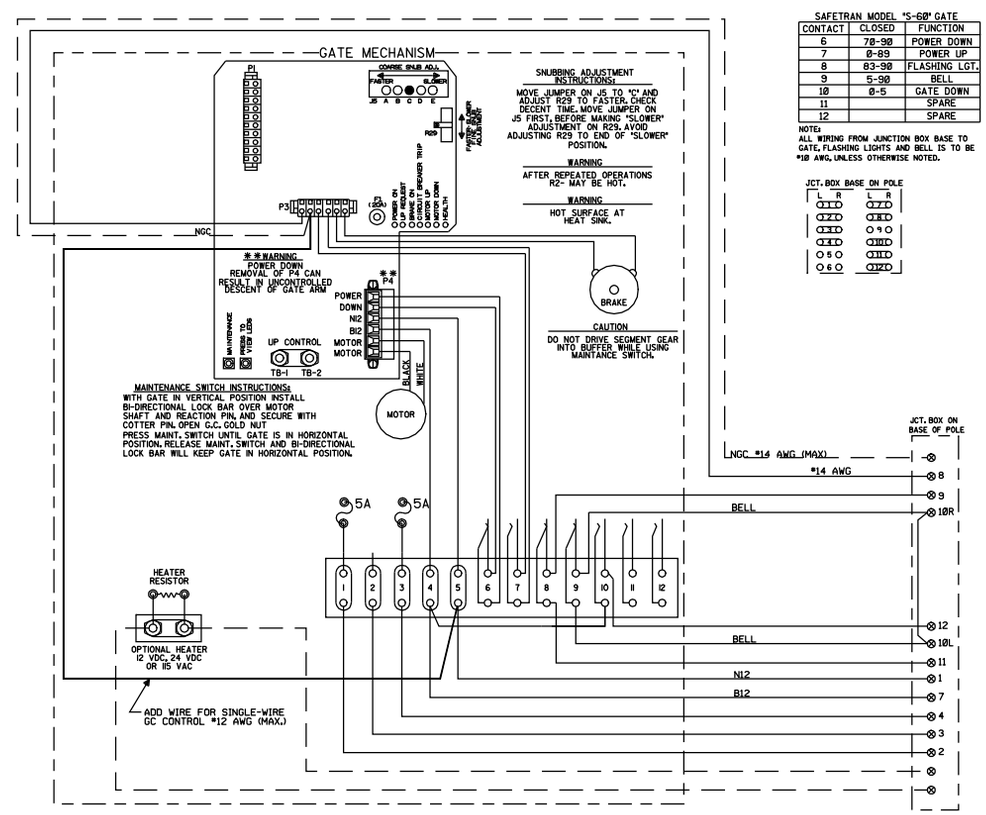

SAFETRAN MODEL "S-60" GATE

CONTACT	CLOSED	FUNCTION
6	70-90	POWER DOWN
7	0-89	POWER UP
8	83-90	FLASHING LGT.
9	5-90	BELL
10	0-5	GATE DOWN
11		SPARE
12		SPARE

NOTE:
ALL WIRING FROM JUNCTION BOX BASE TO GATE, FLASHING LIGHTS AND BELL IS TO BE #10 AWG, UNLESS OTHERWISE NOTED.

JCT. BOX BASE ON POLE

NEW SHEET

Designed: 11/16/09

INSTALL FLASHERS, GATES AND CWT AT TR40 M.P. 30.44

Rec#: WO#: 02748
IS: /RLT / /NST/JTB

MODIFICATION LEVEL	
Q.A. LAST LEVEL CHECKED	DS
LAST LEVEL MOD THIS TYPICAL	DS
LAST LEVEL BY DESIGNER	DS
CHANGED FROM TYPICAL?	N

REV 09.02.09 4K GWIRING.7

UNION PACIFIC — QUALITY PRODUCTIVITY SAFETY — SIGNAL DESIGN

Date: 11/16/09
Des: NST
Chk: RLT
AFE: 02748

UNION PACIFIC RAILROAD

MAEYSTOWN, ILLINOIS
TR 40
CHESTER SUBDIVISION

Office of Sr AVP Engineering - Signal/TCO Omaha, Nebraska

Sh.: 6
DOT 436301C
MP: 30.44
ID: 12753044.6X

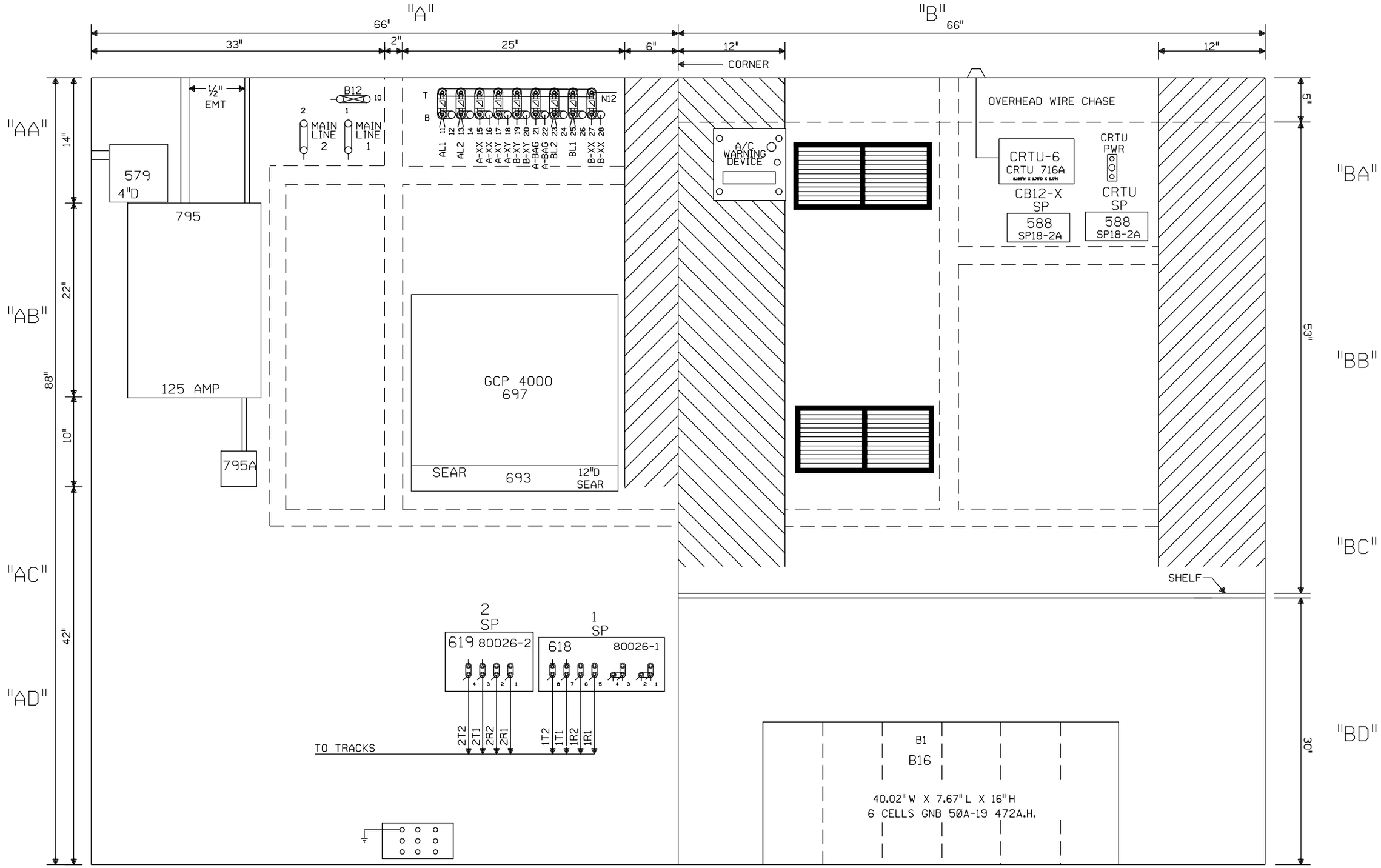

NOTE: ALL DIMENSIONS SHOWN ARE APPROXIMATE.

NEW SHEET

					Designed: 11/16/09 INSTALL FLASHERS, GATES AND CWT AT TR40 M.P. 30.44 Req#: WO#: 02748 IS: /RLT / /NST/JTB	MODIFICATION LEVEL		UNION PACIFIC SAFETY SIGNAL DESIGN	Date: 11/16/09	UNION PACIFIC RAILROAD	Sh.: 7
						Q.A. LAST LEVEL CHECKED	DS		Des: NST	MAEYSTOWN, ILLINOIS	DOT 436301C
						LAST LEVEL MOD THIS TYPICAL	DS		Chk: RLT	TR 40	MP: 30.44
						LAST LEVEL BY DESIGNER	DS		AFE: 02748	CHESTER SUBDIVISION	ID: 12753044.7X
						CHANGED FROM TYPICAL?	Y			Office of Sr AVP Engineering - Signal/TCO Omaha, Nebraska	
						REV 09.02.09 4K 4TKGFC.8					

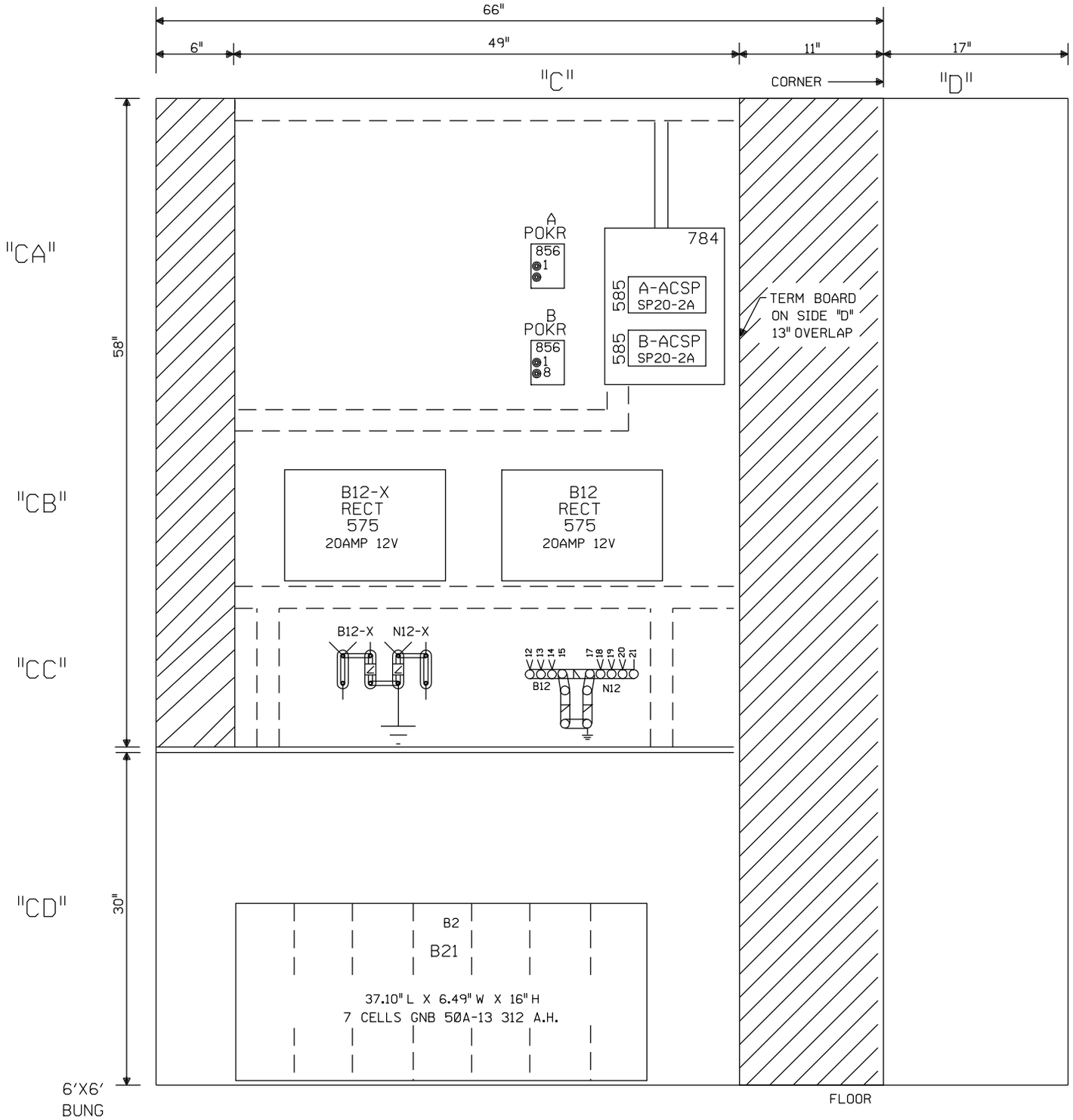

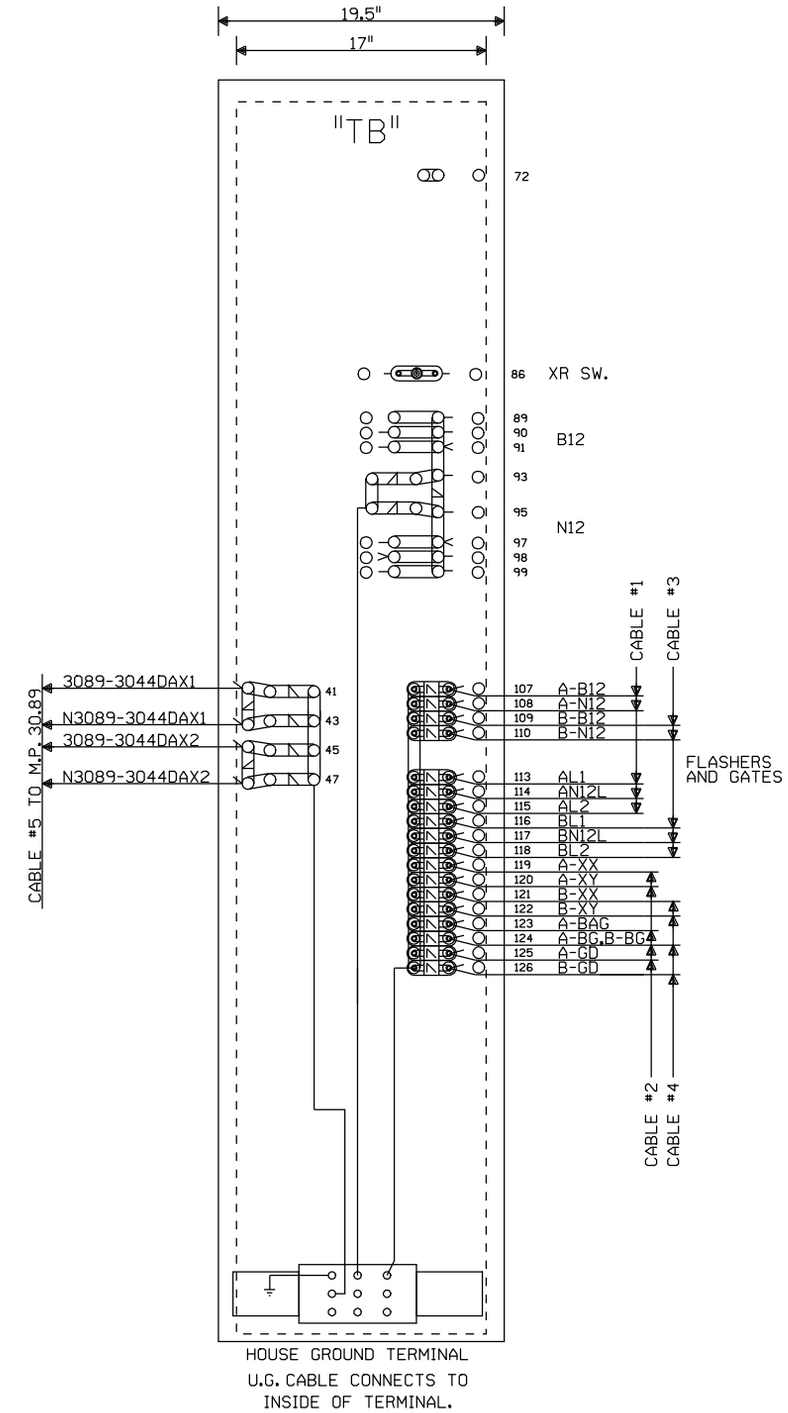

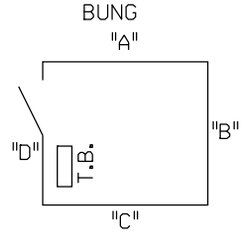

NOTE: ALL DIMENSIONS SHOWN
ARE APPROXIMATE.

NEW SHEET

					Designed: 11/16/09 INSTALL FLASHERS, GATES AND CWT AT TR40 M.P. 30.44 Rec#: WO#: 02748 IS: /RLT /NST/JTB	MODIFICATION LEVEL		UNION PACIFIC QUALITY PRODUCTIVITY SAFETY SIGNAL DESIGN	Date: 11/16/09 Des: NST Chk: RLT AFE: 02748	UNION PACIFIC RAILROAD MAEYSTOWN, ILLINOIS TR 40 CHESTER SUBDIVISION Office of Sr AVP Engineering - Signal/TCO Omaha, Nebraska	Sh.: 8 DOT 436301C MP: 30.44 ID: 12753044.8X
						Q. A. LAST LEVEL CHECKED	DS				
						LAST LEVEL MOD THIS TYPICAL	DS				
						LAST LEVEL BY DESIGNER	DS				
						CHANGED FROM TYPICAL?	Y				
						REV 09.02.09 4K GFC.9					

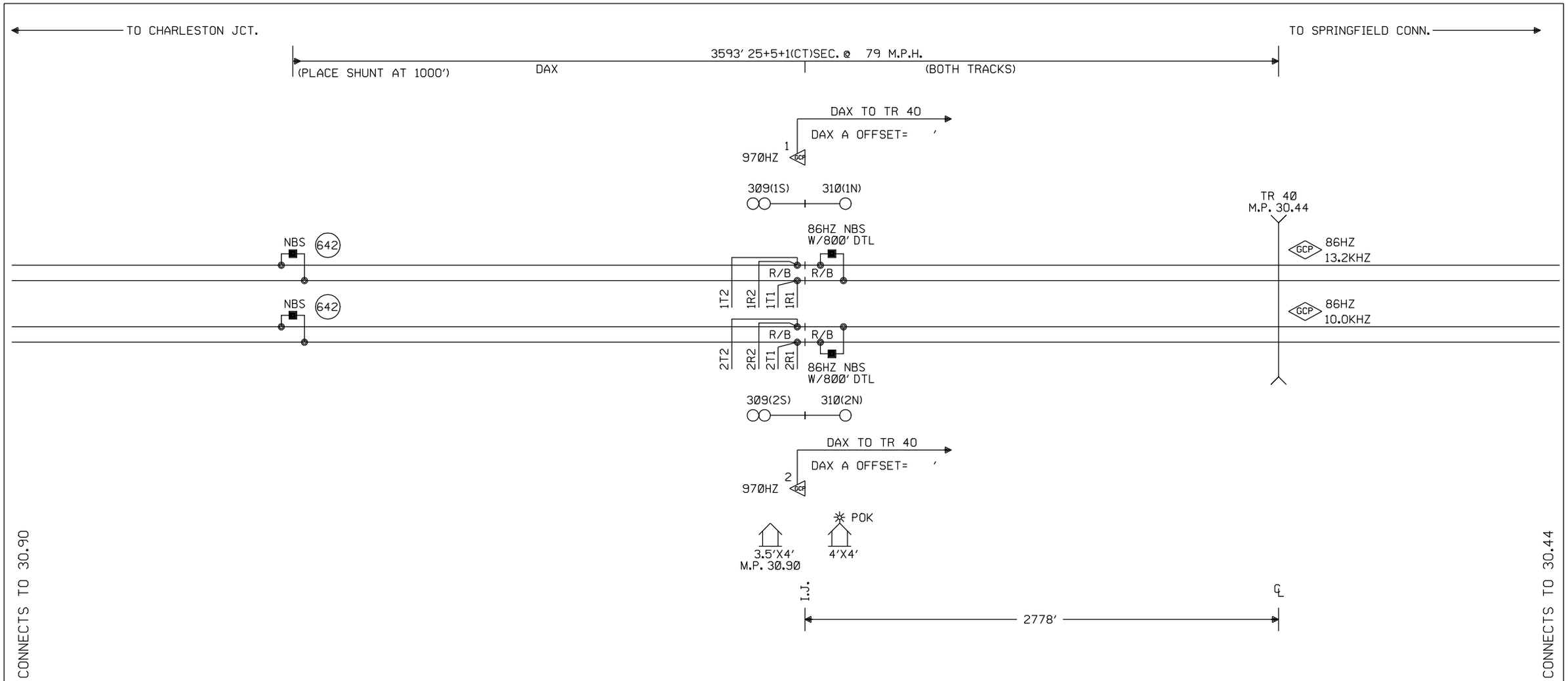

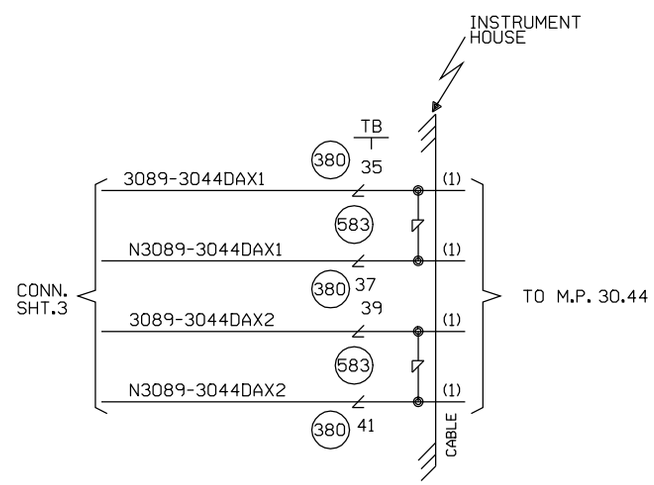

NOTES:

⊗ = TWISTED WIRES
ALL TRACK WIRES 2C. #6
INSULATED 1 TWIST PER FT.

TRANSMITTER AND RECEIVER LEADS
TO BE SEPARATED BY AT LEAST 12" IN TRENCH,
LENGTHS SHOULD NOT EXCEED MANUFACTURES
RECOMMENDATION.

ALL BUNGALOW WIRING TO BE #16 AWG FLEX
UNLESS OTHERWISE SPECIFIED EXCEPT ALL GROUND
WIRE TO BE #6 AWG FLEX OR LARGER.

REFER TO UP STANDARD DWG. FOR BUNGALOW
GROUNDING.

PORTABLE GENERATOR EXTENSION CORD
FOR 240V TO 240V IS PROVIDED AS WELL
AS A 120V TO 240V ADAPTER.

CONSTRUCTION NOTE:

1. THIS LOCATION TO BE INSTALLED IN CONJUNCTIONS WITH M.P.30.44

W(S) ◄——○——► E(N)

CABLE TABULATION

CABLE #1 7C#14 U.G.B.T. HOUSE TO MP. 30.44

NEW SHEET

Designed: 11/16/09
INSTALL FLASHERS, GATES AND CWT AT TR40 M.P. 30.44
Rec#: WO#: 02748
IS: / /RLT /NST/JTB
REV 09.02.09 4K REMOTE.1

MODIFICATION LEVEL	
Q. A. LAST LEVEL CHECKED	DS
LAST LEVEL MOD THIS TYPICAL	DS
LAST LEVEL BY DESIGNER	DS
CHANGED FROM TYPICAL?	Y

UNION PACIFIC
QUALITY PRODUCTIVITY SAFETY
SIGNAL DESIGN

Date: 11/16/09
Des: NST
Chk: RLT
AFE: 02748

UNION PACIFIC RAILROAD
MAEYSTOWN, ILLINOIS
REMOTE LOCATION
CHESTER SUBDIVISION
Office of Sr AVP Engineering - Signal/TCO Omaha, Nebraska

Sh.: 1
DOT 000000R
MP: 30.89
ID: 12753089.1X

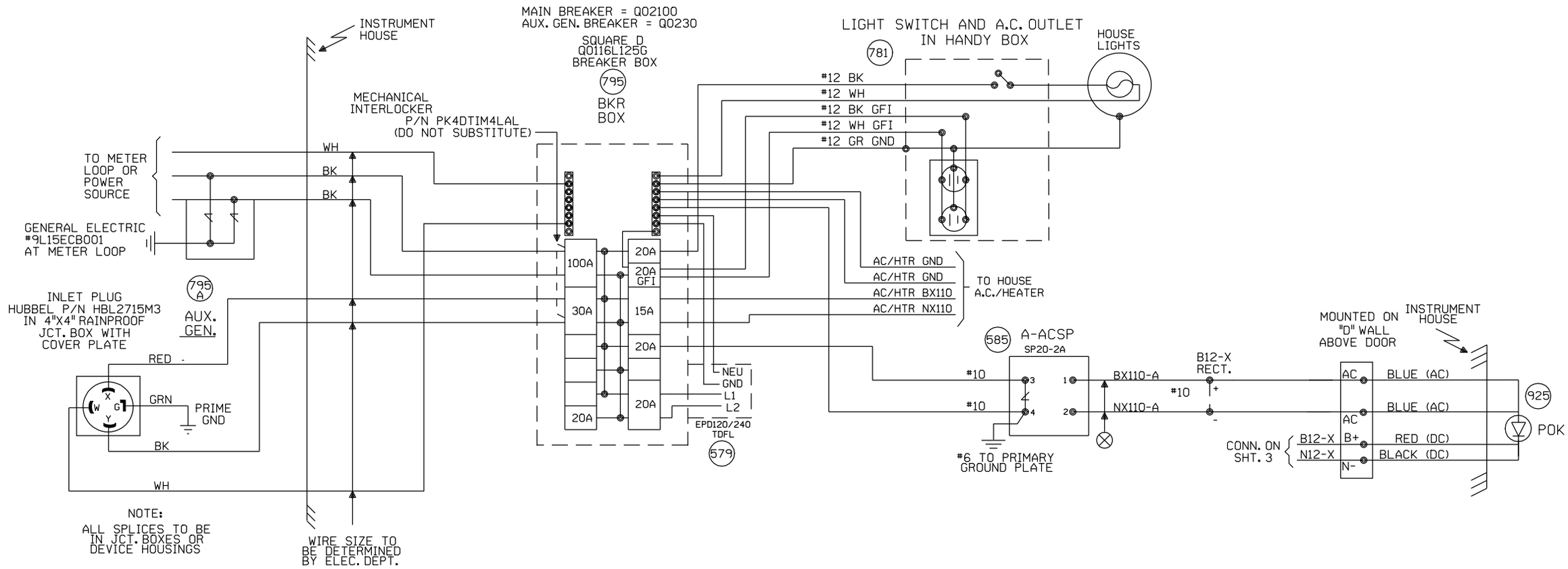

NEW SHEET

					Designed: 11/16/09 INSTALL FLASHERS, GATES AND CWT AT TR40 M.P. 30.44 Rec#: WO#: 02748 IS: /RLT / /NST/JTB	MODIFICATION LEVEL Q. A. LAST LEVEL CHECKED LAST LEVEL MOD THIS TYPICAL LAST LEVEL BY DESIGNER CHANGED FROM TYPICAL? REV 09.02.09 4K SEARAC.2	DS DS DS Y	UNION PACIFIC QUALITY PRODUCTIVITY SAFETY SIGNAL DESIGN	Date: 11/16/09 Des: NST Chk: RLT AFE: 02748	UNION PACIFIC RAILROAD MAEYSTOWN, ILLINOIS REMOTE LOCATION CHESTER SUBDIVISION Office of Sr AVP Engineering - Signal/TCO Omaha, Nebraska	Sh.: 2 DOT 000000R MP: 30.89 ID: 12753089.2X

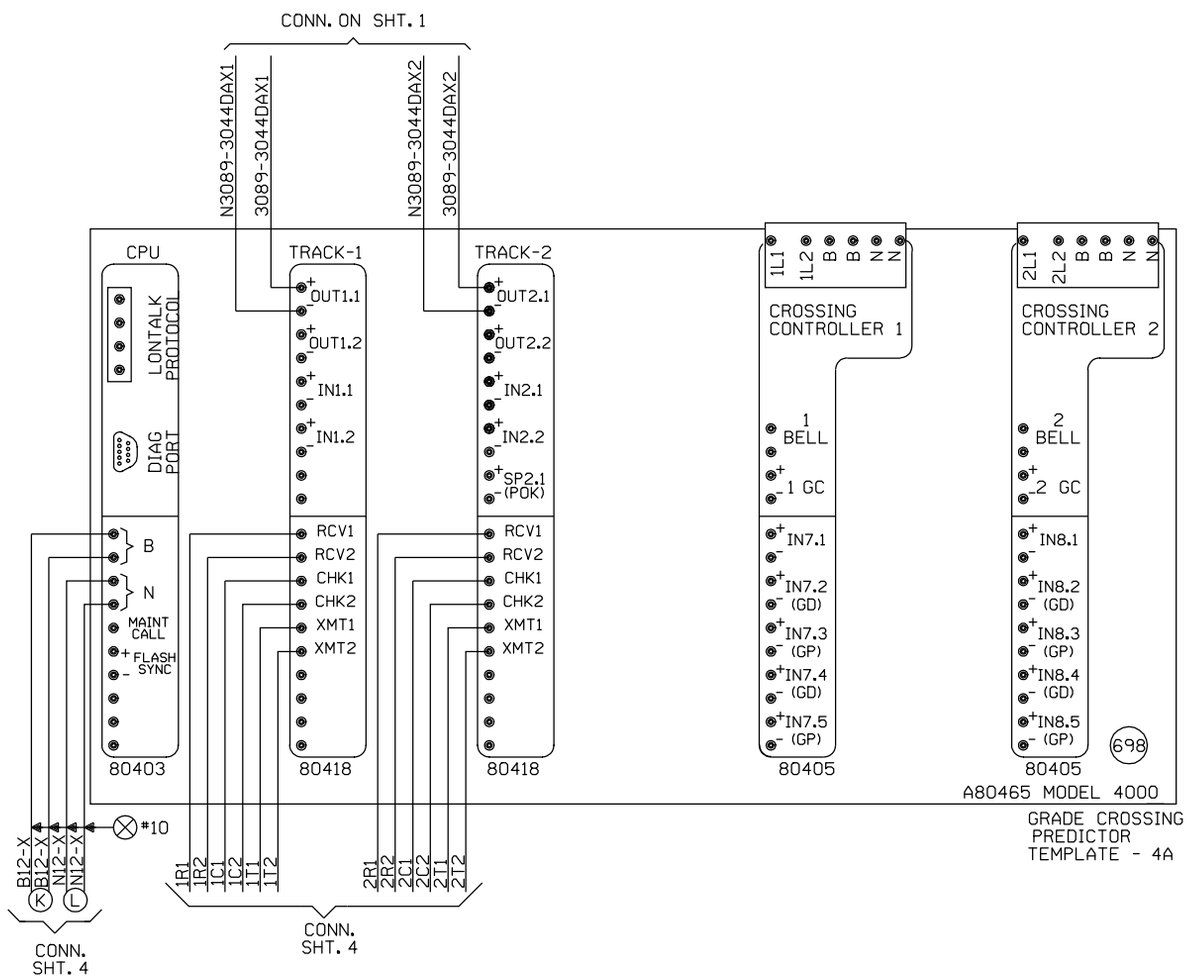

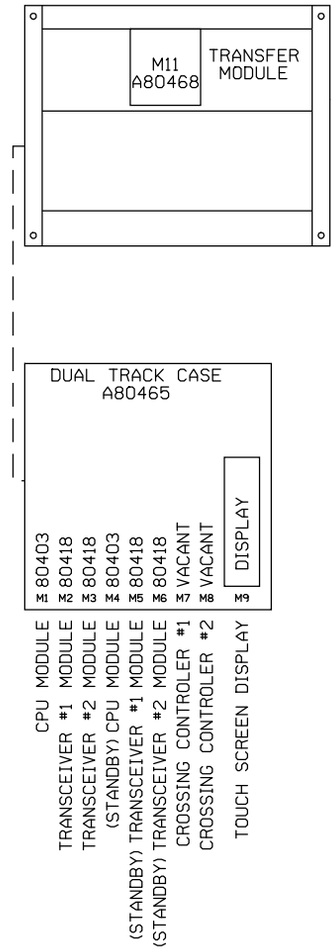

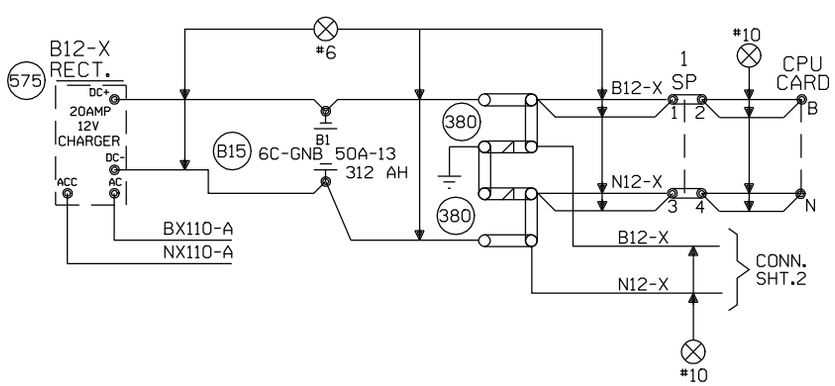

"Mf" FREQUENCY (HZ)	MAXIMUM TRANSMIT WIRE LENGTH (FEET)
86	100
114	125
156	150
211	200
285-970	250

NOTE:
EACH TRANSMITTER TO RAIL WIRE FROM XMT1 AND XMT2 MUST NOT EXCEED THE MAXIMUM LENGTH SPECIFIED IN THE TABLE SHOWN. THE RECEIVER WIRE LENGTH IS NOT CRITICAL. DOES NOT APPLY TO 6 TRACK WIRE APPLICATION.

NEW SHEET

Designed: 11/16/09
INSTALL FLASHERS, GATES AND CWT AT TR40 M.P. 30.44
Req#: WO#: 02748
IS: / /RLT /NST/JTB

MODIFICATION LEVEL	
Q. A. LAST LEVEL CHECKED	DS
LAST LEVEL MOD THIS TYPICAL	DS
LAST LEVEL BY DESIGNER	DS
CHANGED FROM TYPICAL?	Y

REV 09.02.09 4K 2TKGF.3

UNION PACIFIC
QUALITY PRODUCTIVITY SAFETY
SIGNAL DESIGN

Date: 11/16/09
Des: NST
Chk: RLT
AFE: 02748

UNION PACIFIC RAILROAD
MAEYSTOWN, ILLINOIS
REMOTE LOCATION
CHESTER SUBDIVISION
Office of Sr AVP Engineering - Signal/TCO Omaha, Nebraska

Sh.: 3
DOT 000000R
MP: 30.89
ID: 12753089.3X

```
Minimum Program Steps Report
----------------------------

Location and SIN
----------------
DOT Number: 000000R
Milepost Number: 30.89
Site Name: Maeystown, IL

SIN: 762010010016 *

* Parameter is part of office check number calculation.

MCF and Template Selection
--------------------------
MCF Name: GCP-T6X-02-1.mcf
MCF Revision: 021
MCFCRC: 6076E435

Template = 4A:6 Remotes *

* Parameter is part of office check number calculation.

Minimum Program Steps
---------------------
TEMPLATE:  module configuration
Track 2/RIO 1 Slot = Track *

TEMPLATE:  track 1-Remote Dax
Track 1 : GCP Frequency = 970 Hz
Track 1 : Approach Distance = 875 ft
Track 1 : Dax A Warning Time = 26 sec
Track 1 : Dax A Offset Distance = 2718 ft
Track 1 : GCP Transmit Level = Medium (Set in Field)

TEMPLATE:  track 2-Remote Dax
Track 2 : GCP Frequency = 970 Hz
Track 2 : Approach Distance = 875 ft
Track 2 : Dax A Warning Time = 26 sec
Track 2 : Dax A Offset Distance = 2718 ft
Track 2 : GCP Transmit Level = Medium (Set in Field)

TEMPLATE:  OP assignment 1
OUT 1.1 = T1 Dax A *
OUT 2.1 = T2 Dax A *

* Parameter is part of office check number calculation.

Check Numbers
-------------
Office Check No. (DT 4.6.0): 50A34863
Office Check Number: 50A34863
Config. Check Number: 444E9330
(Based on MCF Revision 021)

Parameters not part of office check number calculation:

Track 1 : GCP Frequency = 970 Hz
Track 1 : Approach Distance = 875 ft
Track 1 : Dax A Warning Time = 26 sec
Track 1 : Dax A Offset Distance = 2718 ft
Track 1 : GCP Transmit Level = Medium (Set in Field)
Track 2 : GCP Frequency = 970 Hz
Track 2 : Approach Distance = 875 ft
Track 2 : Dax A Warning Time = 26 sec
Track 2 : Dax A Offset Distance = 2718 ft
Track 2 : GCP Transmit Level = Medium (Set in Field)

Comments
--------
<none>

Configuration Package File
--------------------------
Filename: 12753089 000000R.pac
Path: H:\UP\Xings\Projects\TR 40 21-267-0\PAC Files\PAC FILES 30.89\
Date/Time: 6/04/2010 16:18:41
```

NEW SHEET

Designed: 11/16/09
INSTALL FLASHERS, GATES AND CWT AT TR40 M.P. 30.44
Req#: WO#: 02748 /RLT
IS: / /NST/JTB

NOTE: Actual OFFSET and ISLAND distances must be verified by field personnel.

UNION PACIFIC
QUALITY PRODUCTIVITY SAFETY
SIGNAL DESIGN

Date:	11/16/09
Des:	NST
Chk:	RLT
AFE:	02748

UNION PACIFIC RAILROAD

MAEYSTOWN, ILLINOIS
REMOTE LOCATION
CHESTER SUBDIVISION

Office of Sr AVP Engineering - Signal/TCO Omaha, Nebraska

Sh.:	3A
DOT	000000R
MP:	30.89
ID:	12753089.3AX

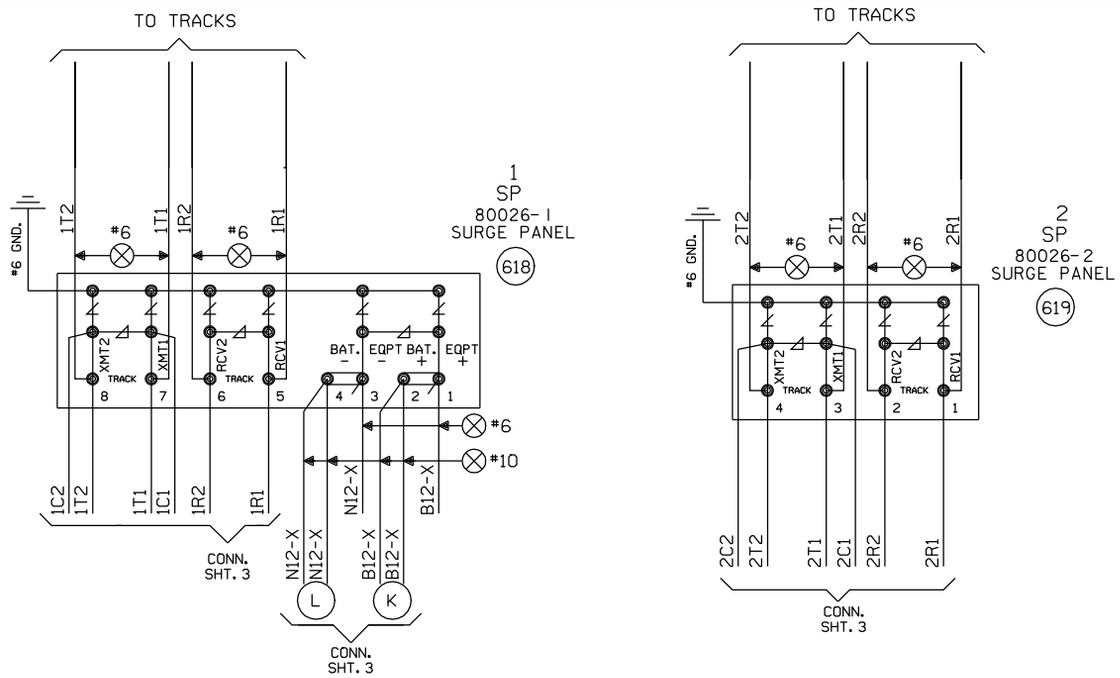

NEW SHEET

Designed: 11/16/09

INSTALL FLASHERS, GATES AND CWT AT TR40 M.P. 30.44

Rec#: WO#: 02748
IS: /RLT
/ /NST/JTB

MODIFICATION LEVEL	
Q. A. LAST LEVEL CHECKED	DS
LAST LEVEL MOD THIS TYPICAL	DS
LAST LEVEL BY DESIGNER	DS
CHANGED FROM TYPICAL?	Y

REV 09.02.09 4K REMOTE.4

UNION PACIFIC
QUALITY PRODUCTIVITY SAFETY
SIGNAL DESIGN

Date: 11/16/09
Des: NST
Chk: RLT
AFE: 02748

UNION PACIFIC RAILROAD

MAEYSTOWN, ILLINOIS
REMOTE LOCATION
CHESTER SUBDIVISION

Office of Sr AVP Engineering - Signal/TCO Omaha, Nebraska

Sh.: 4
DOT 000000R
MP: 30.89
ID: 12753089.4X

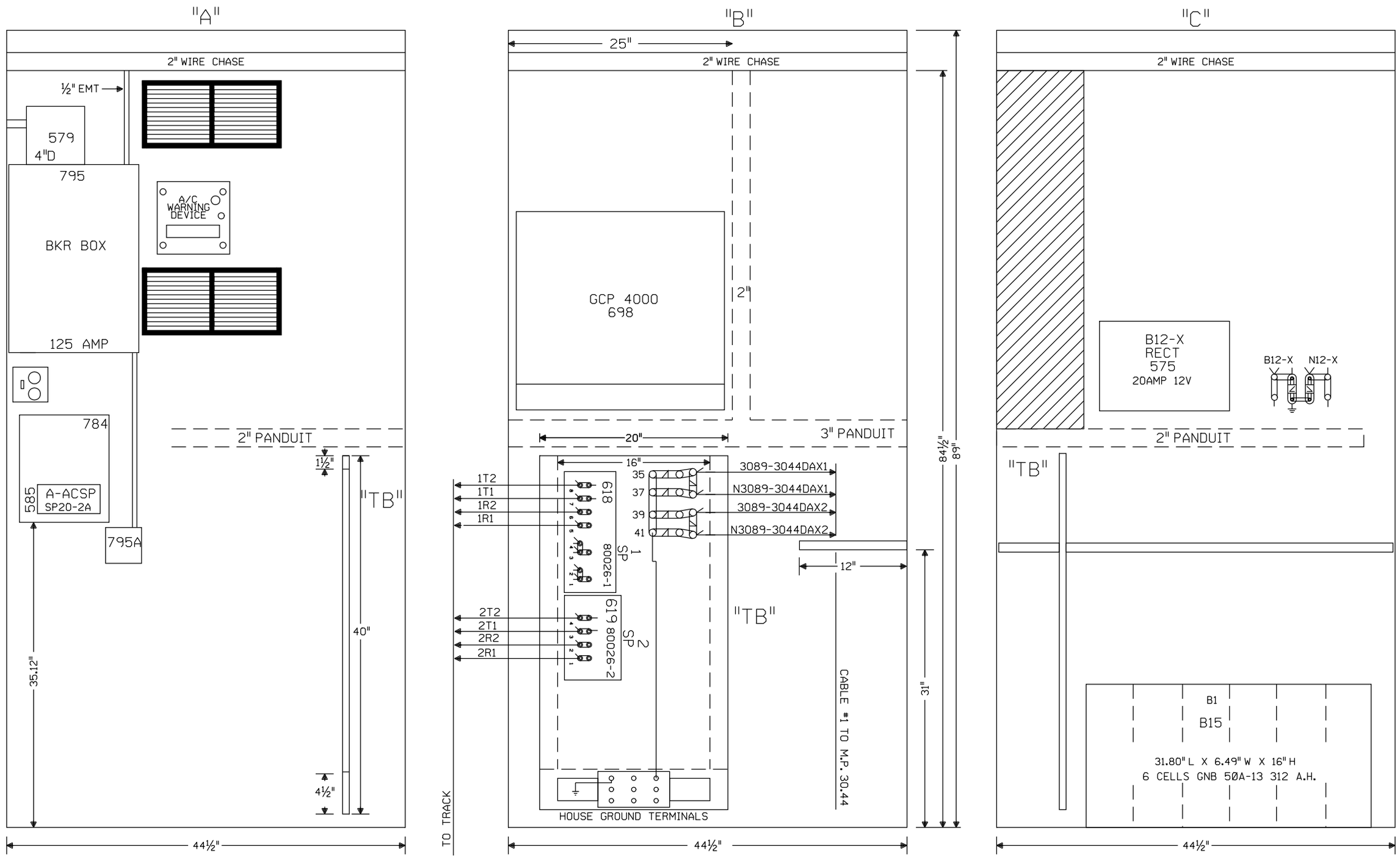

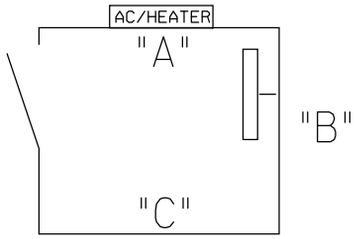

NOTE: ALL DIMENSIONS SHOWN ARE APPROXIMATE.

NEW SHEET

					Designed: 11/16/09 INSTALL FLASHERS, GATES AND CWT AT TR40 M.P. 30.44 Rec#: ISs WO#: 02748 /RLT / /NST/JTB	MODIFICATION LEVEL		UNION PACIFIC QUALITY PRODUCTIVITY SAFETY SIGNAL DESIGN	Date: 11/16/09 Des: NST Chk: RLT AFE: 02748	UNION PACIFIC RAILROAD MAEYSTOWN, ILLINOIS REMOTE LOCATION CHESTER SUBDIVISION Office of Sr AVP Engineering - Signal/TCO Omaha, Nebraska	Sh.: 5 DOT 000000R MP: 30.89 ID: 12753089.5X
						Q.A. LAST LEVEL CHECKED	DS				
						LAST LEVEL MOD THIS TYPICAL	DS				
						LAST LEVEL BY DESIGNER	DS				
						CHANGED FROM TYPICAL?	Y				
						REV 09.02.09 4K REMOTE.5					

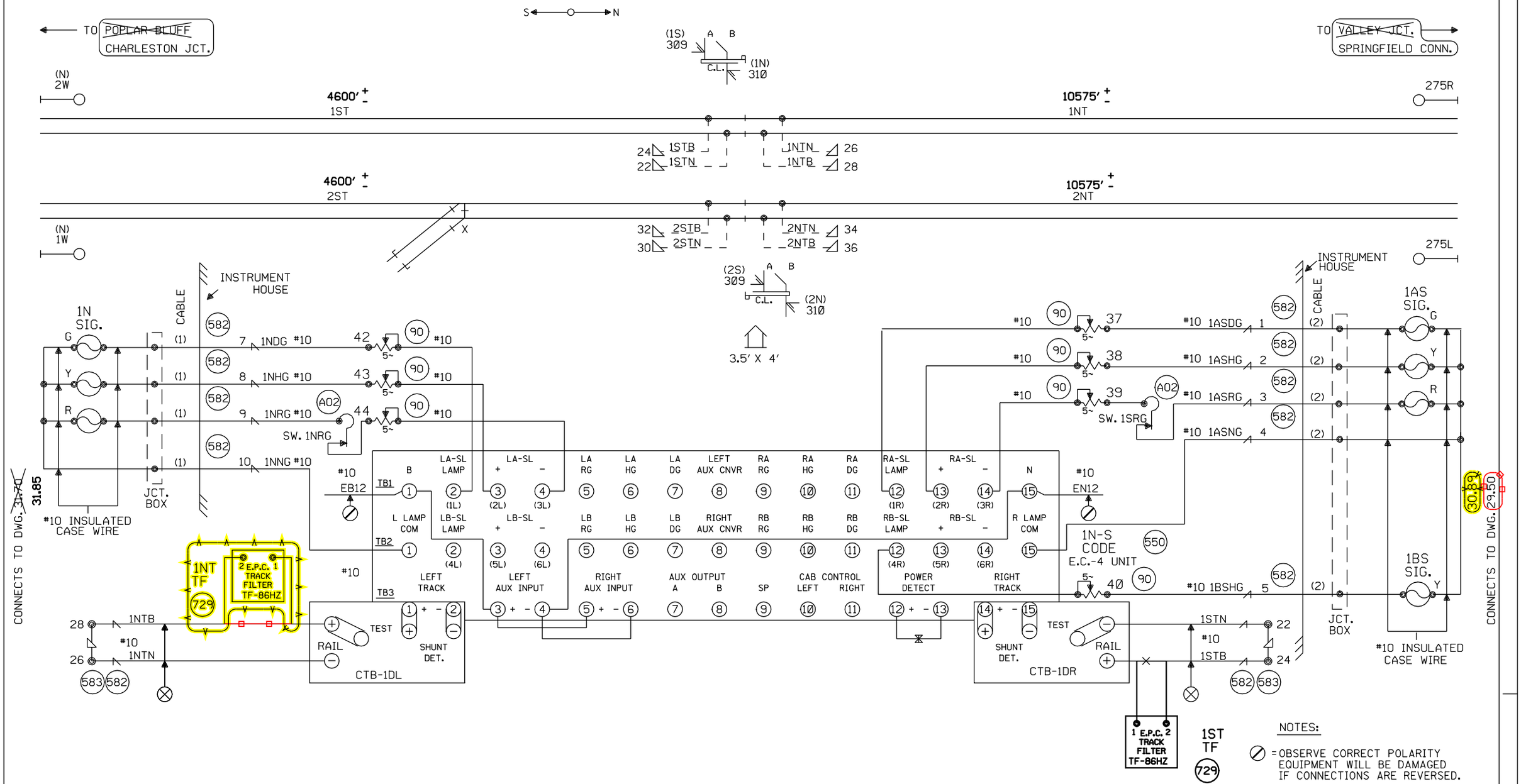

S1

RIGHT C1 C5
LEFT C1 C5

CODE 5 SELECT SWITCHES
LOCATED ON 215 MODULE
PROGRAM ID. UCN-S5 REV.H
CHASSIS TYPE EC4
CONFIG. "A"
ASSIGNED CHASSIS I.D.
STRAPPING OXXXXOXX
12345678

= EXISTING/REVISE ORIGINALS IF A.C.'D

= IN
= OUT

= IN
= OUT

NOTES:

= OBSERVE CORRECT POLARITY EQUIPMENT WILL BE DAMAGED IF CONNECTIONS ARE REVERSED.

= TWISTED WIRES.
ALL WIRING TO TRACK 2C.NO.6 U.G.B.T. CABLE

ALL HOUSE WIRING TO BE NO.16 UNLESS OTHERWISE SPECIFIED

REFER TO STANDARDS DRAWING FOR HOUSE GROUNDING SCHEMES.

ALL GROUND CONNECTIONS TO BE #6 OR LARGER, SIGNAL WIRING SHOP TO RUN ALL GROUND CONNECTIONS.

ENSURE TRACK POLARITY IS TRANSPOSED ACROSS ALL INSULATED JOINTS.

= TEST TERMINAL

CHESTER SUBDIVISION
SIGNALS 1N-S
SIGNALS 2N-S
M.P. 30.9
3.5' X 4.0' HOUSE

CABLE TABULATION

CABLE NO.1-5C.NO.6 HSE. TO SIGNAL 1N
CABLE NO.2-5C.NO.6 HSE. TO SIGNAL 1S
CABLE NO.3-5C.NO.6 HSE. TO SIGNAL 2N
CABLE NO.4-5C.NO.6 HSE. TO SIGNAL 2S

Designed: 11/16/09
INSTALL FLASHERS, GATES AND CWT AT TR40 M.P. 30.44
Rec*: IS: WO*: 02748 /RLT /NST/JTB

Designed: 11/09/09
INSTALL FLASHERS, GATES AND CWT AT TR 38-A M.P. 31.85
Rec*: IS: WO*: 02747 /RLT /NST/JTB

1 REV. 3-21-95
INSTALL EC4/FLOOD DAMAGE CONSTRUCTION M.P. 10.9-40.2
2-14-95 PH/CTC/ /GWS

MODIFICATION LEVEL	
Q.A. LAST LEVEL CHK'D.	AR
LAST LEVEL MOD. THIS TYP.	AR
LAST LEVEL BY DESIGNER.	00
CHANGED FROM TYP.? Y/N	Y

UNION PACIFIC
QUALITY PRODUCTIVITY SAFETY
SIGNAL DESIGN

DES: GWS
DIG:
CHK:
A.F.E. 12041
ID= 127503090.1:1

UNION PACIFIC RAILROAD
VALLEY JCT., ILLINOIS TO
POPLAR BLUFF, MISSOURI
C.T.C. CIRCUITS
OFFICE OF CHIEF ENG'R SIGNALS OMAHA NEBR.

DATE 8-6-93
SHEET 1 OF 3
DWG 30.90
S-1275-M

(REV. 12-15-93) (2TE4INTRC.1)

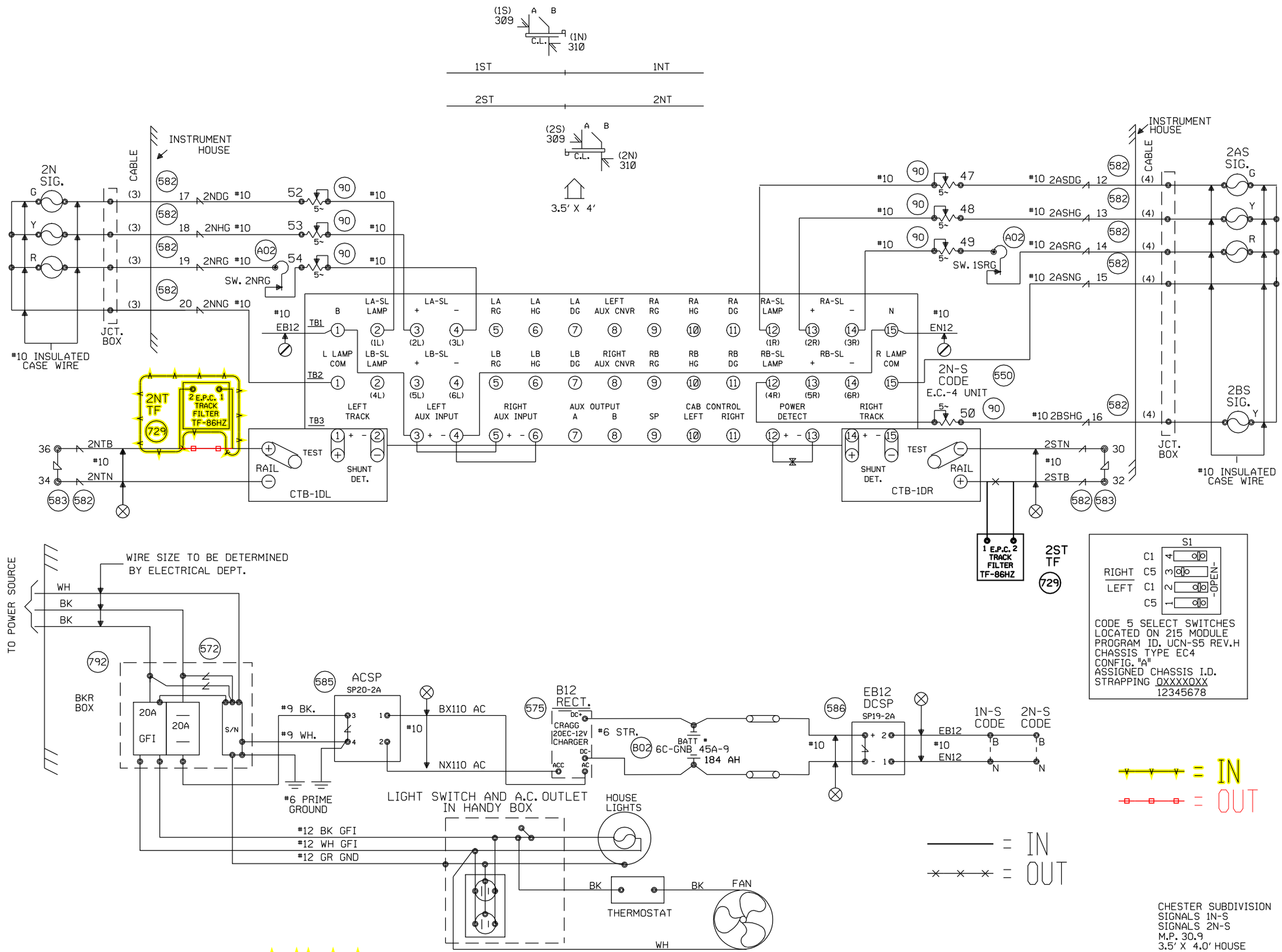

CHESTER SUBDIVISION
SIGNALS 1N-S
SIGNALS 2N-S
M.P. 30.9
3.5' X 4.0' HOUSE

Designed: 11/16/09
INSTALL FLASHERS, GATES AND CWT AT TR40 M.P. 30.44
Rec#: IS: WO#: 02748 /RLT /NST/JTB

Designed: 11/09/09
INSTALL FLASHERS, GATES AND CWT AT TR 38-A M.P. 31.85
Rec#: IS: WO#: 02747 /RLT / /NST/JTB

1 REV. 3-21-95
INSTALL EC4/FLOOD DAMAGE CONSTRUCTION M.P. 10.9-40.2
2-14-95 PH/CTC/ /GWS

MODIFICATION LEVEL	
Q.A. LAST LEVEL CHK'D.	AR
LAST LEVEL MOD. THIS TYP.	AR
LAST LEVEL BY DESIGNER.	00
CHANGED FROM TYP.? Y/N	Y

UNION PACIFIC
QUALITY PRODUCTIVITY SAFETY
SIGNAL DESIGN

DES: GWS
DIG:
CHK:
A.F.E. 12041
ID= 127503090.2;1

UNION PACIFIC RAILROAD
VALLEY JCT., ILLINOIS TO
POPLAR BLUFF, MISSOURI
C.T.C. CIRCUITS
OFFICE OF CHIEF ENG'R SIGNALS OMAHA NEBR.

DATE 8-6-93
SHEET 2 OF 3
DWG 30.90
S-1275-M

(REV. 12-15-93) (2TE4INTRC.2)

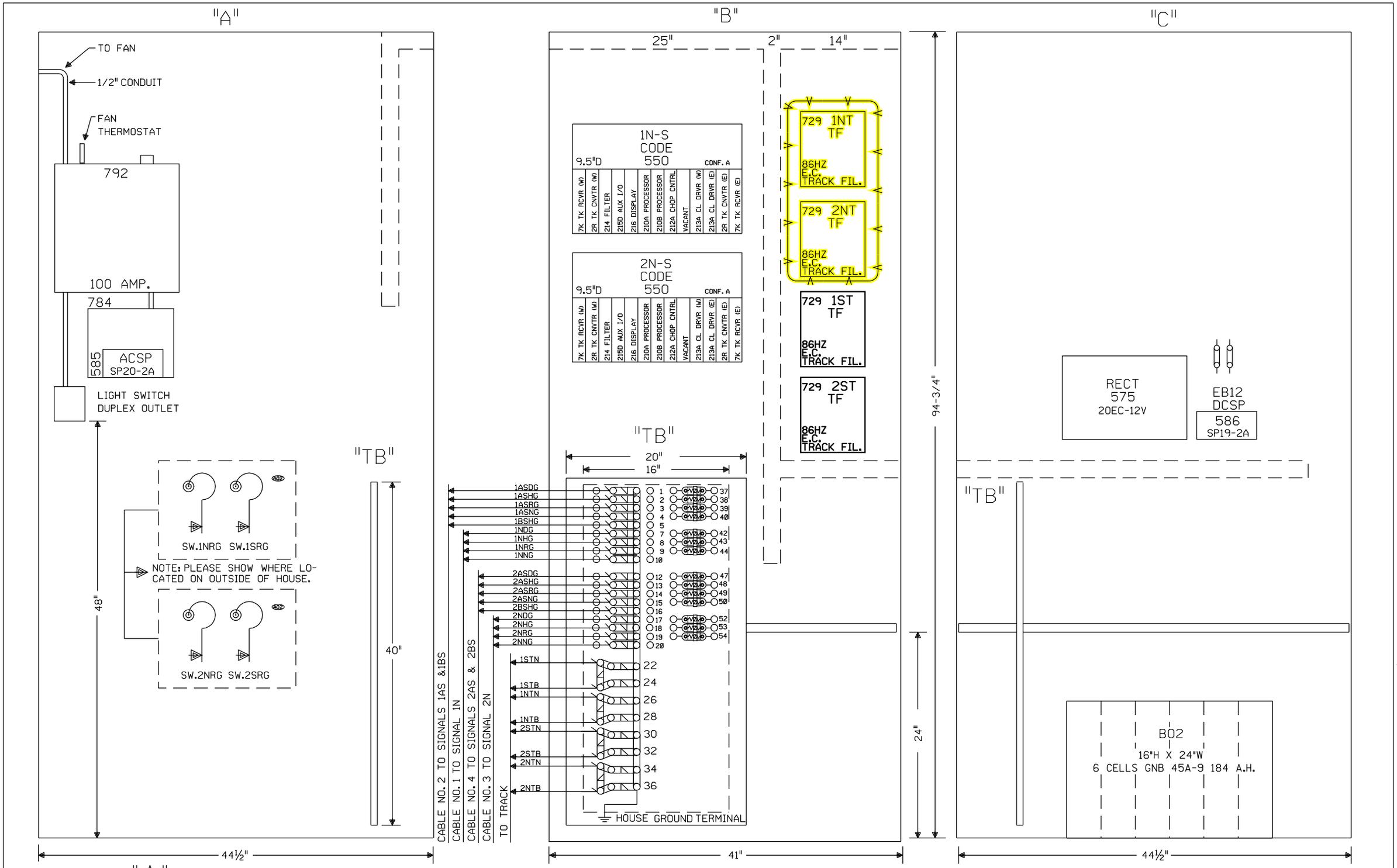

CHESTER SUBDIVISION
SIGNALS 1N-S
SIGNALS 2N-S
M.P. 30.9
3.5'X4.0' HOUSE

Designed: 11/16/09
INSTALL FLASHERS, GATES AND CWT AT TR40 M.P. 30.44
Rec#: 1St
WO#: 02748 /RLT /NST/JTB

Designed: 11/09/09
INSTALL FLASHERS, GATES AND CWT AT TR 38-A M.P. 31.85
Rec#: 5t
WO#: 02747 /RLT /NST/JTB

1 REV. 3-21-95
INSTALL EC4/FLOOD DAMAGE CONSTRUCTION M.P. 10.9-40.2
2-14-95
PH/CTC/ /GWS

MODIFICATION LEVEL	
Q.A. LAST LEVEL CHK'D.	AR
LAST LEVEL MOD. THIS TYP.	AR
LAST LEVEL BY DESIGNER.	00
CHANGED FROM TYP.? Y/N	Y

UNION PACIFIC
QUALITY PRODUCTIVITY SAFETY
SIGNAL DESIGN

DES: GWS
DIG:
CHK:
A.F.E. 12041
ID=127503090.3;1

UNION PACIFIC RAILROAD
VALLEY JCT., ILLINOIS TO
POPLAR BLUFF, MISSOURI
C.T.C. CIRCUITS
OFFICE OF CHIEF ENG'R SIGNALS OMAHA NEBR.

DATE 8-6-93
SHEET 3 OF 3
DWG 30.90
S-1275-M

(REV. 12-15-93) (2TE4INTRC.3)