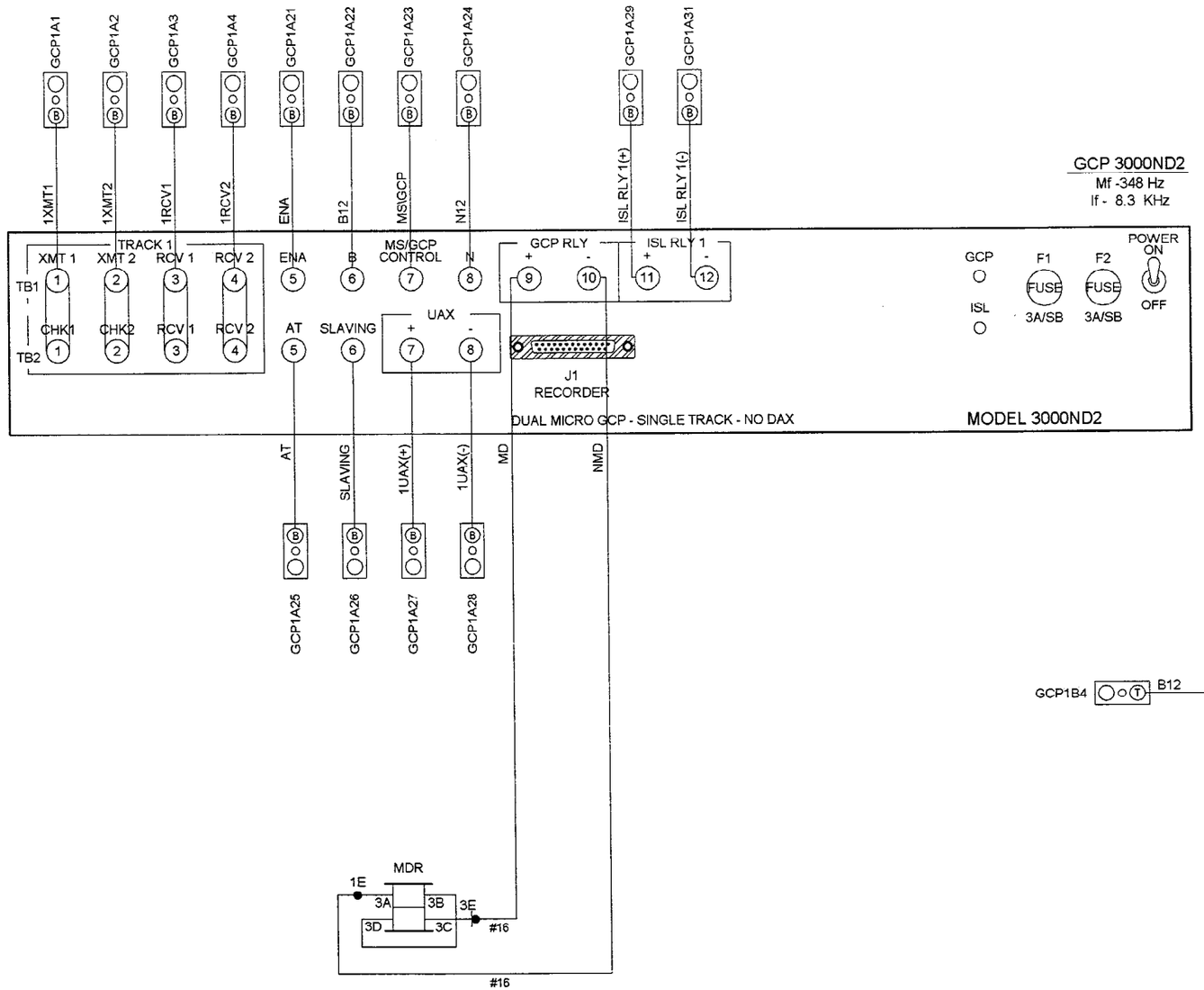

NOTES:
1. ALL WIRING #10 AWG UNLESS OTHERWISE NOTED
2. TERMINAL DESIGNATIONS:
   EC41A1 = ELECTROCODE 4 RACK #1, WAGO STRIP A, TERMINAL 1
   GCP1A1 = GCP RACK #1, WAGO STRIP A, TERMINAL 1
   SP1A1 = SURGE PANEL RACK #1, COLUMN A, TERMINAL 1
   PWR1A1 = POWER RACK #1, WAGO STRIP A, TERMINAL 1

REGION: GULF	Illinois Central — COMMUNICATIONS & SIGNALS, ENGINEERING DEPARTMENT
DISTRICT: SPARTA	
FILENAME: 58990C02.CAD	SD 1022 C MP 589.90 TO 589.70
DESIGNER: MKN / DATE: 1/16/98	Sparta, IL
SHEET NO. 2 OF 15	Burns Ave GCP 3000ND2

5 4 3 2 1 REVISIONS

3000 GCP APPLICATION HISTORY CARD

Equipment: 3000 ☐ 3000D2 ☐ 3000D2L ☐ 3000ND ☐ 3000ND2 ■ Unit/Serial No: _____ Crossing No: IC-589.78-MM

Crossing Name: BURNS AVE City: SPARTA State: IL

Date Installed: 8-27-98 Weather: _____

Island Frequency: T1: 8.3 kHz T2: _____ kHz

PROGRAMMING HISTORY

		Initial Programmed Value Date: _____	Program Change Date: _____	Program Change Date: _____
■ press PROGRAM key				
NUMBER OF TRACKS (Number of transceiver modules, 1 or 2)		1 ■ 2 ☐	1 ☐ 2 ☐	1 ☐ 2 ☐
FREQUENCY (MS/GCP)		348 Hz	Hz	Hz
UNIDIRECTIONAL/BIDIRECTIONAL	T1:	UNI ☐ BI ■	UNI ☐ BI ☐	UNI ☐ BI ☐
	T2:	UNI ☐ BI ☐	UNI ☐ BI ☐	UNI ☐ BI ☐
XMIT LEVEL	T1:	MAX ☐ MED ■	MAX ☐ MED ☐	MAX ☐ MED ☐
	T2:	MAX ☐ MED ☐	MAX ☐ MED ☐	MAX ☐ MED ☐
PREDICTOR/MOTION SENSOR	T1:	PRED ■ MS ☐	PRED ☐ MS ☐	PRED ☐ MS ☐
	T2:	PRED ☐ MS ☐	PRED ☐ MS ☐	PRED ☐ MS ☐
WARNING TIME SELECTED	T1:	25 sec.	26 sec.	sec.
	T2:	sec.	sec.	sec.
APPROACH DISTANCE SELECTED	T1:	1300 ft.	ft.	ft.
	T2:	ft.	ft.	ft.
APPROACH DISTANCE COMPUTED	T1:	ft.	ft.	ft.
	T2:	ft.	ft.	ft.
UAX PICKUP DELAY (UAX1) (0 = OFF)		0 sec.	sec.	sec.
ENA/UAX2 DELAY (0 = ENA)		0 sec.	sec.	sec.
ISLAND DISTANCE (between island track wire connections)	T1:	120 ft.	ft.	ft.
	T2:	ft.	ft.	ft.
NUMBER OF DAX'S		0 ■ 1 ☐ 2 ☐ 3 ☐ 4 ☐	0 ☐ 1 ☐ 2 ☐ 3 ☐ 4 ☐	0 ☐ 1 ☐ 2 ☐ 3 ☐ 4 ☐
DAX A TRACK ASSIGNMENT		T1 ☐ T2 ☐	T1 ☐ T2 ☐	T1 ☐ T2 ☐
DAX A DISTANCE (0=PREEMPT)		ft.	ft.	ft.
DAX A WARNING TIME		sec.	sec.	sec.
DAX B TRACK ASSIGNMENT		T1 ☐ T2 ☐	T1 ☐ T2 ☐	T1 ☐ T2 ☐
DAX B DISTANCE (0=PREEMPT)		ft.	ft.	ft.
DAX B WARNING TIME		sec.	sec.	sec.
DAX C TRACK ASSIGNMENT		T1 ☐ T2 ☐	T1 ☐ T2 ☐	T1 ☐ T2 ☐
DAX C DISTANCE (0=PREEMPT)		ft.	ft.	ft.
DAX C WARNING TIME		sec.	sec.	sec.
DAX D TRACK ASSIGNMENT		T1 ☐ T2 ☐	T1 ☐ T2 ☐	T1 ☐ T2 ☐
DAX D DISTANCE (0=PREEMPT)		ft.	ft.	ft.
DAX D WARNING TIME		sec.	sec.	sec.

PROGRAMMING HISTORY (continued)

	Initial Programmed Value Date: _____	Program Change Date: _____	Program Change Date: _____
SLAVING MASTER/SLAVE	MASTER ■ SLAVE ☐	MASTER ☐ SLAVE ☐	MASTER ☐ SLAVE ☐
PASSWORD ENABLED	DISABLED ☐	DISABLED ☐	DISABLED ☐
	ENABLED ■	ENABLED ☐	ENABLED ☐
RECORDER INSTALLED	NOT INSTALLED ☐	NOT INSTALLED ☐	NOT INSTALLED ☐
	INSTALLED ■	INSTALLED ☐	INSTALLED ☐
RS-232-C BAUD RATE	9600 bps	bps	bps
RS-232-C DATA BITS	7 ☐ 8 ■	7 ☐ 8 ☐	7 ☐ 8 ☐
RS-232-C STOP BITS	1 ■ 2 ☐	1 ☐ 2 ☐	1 ☐ 2 ☐
RS-232-C PARITY	NONE ■ MARK ☐	NONE ☐ MARK ☐	NONE ☐ MARK ☐
	ODD ☐ SPACE ☐	ODD ☐ SPACE ☐	ODD ☐ SPACE ☐
(NOTE: SET DATE & TIME AS REQUIRED)	EVEN ☐	EVEN ☐	EVEN ☐
DATE (e.g., MON 27 FEB 1995)			
TIME (e.g., 11:25:43 AM)			
DAYLIGHT SAVINGS	ON ☐ OFF ☐		

EXPANDED PROGRAMMING HISTORY (Function Mode, Optional)

		Initial Programmed Value Date: _____	Program Change Date: _____	Program Change Date: _____
■ press FUNCTION key				
SWITCH TO MS (enter EZ value)	T1:	0 EZ	EZ	EZ
	T2:	0 EZ	EZ	EZ
TRANSFER DELAY MS TO GCP (O=OFF)	T1:	0 sec.	sec.	sec.
	T2:	0 sec.	sec.	sec.
PRIME PREDICTION OFFSET (O=OFF)	T1:	0 ft.	ft.	ft.
	T2:	0 ft.	ft.	ft.
PICKUP DELAY PRIME		15 sec.	sec.	sec.
PICKUP DELAY DAX A		N/A sec.	sec.	sec.
PICKUP DELAY DAX B		N/A sec.	sec.	sec.
PICKUP DELAY DAX C		N/A sec.	sec.	sec.
PICKUP DELAY DAX D		N/A sec.	sec.	sec.
COMPENSATION VALUE	T1:			
	T2:			
NUMBER OF TRACK WIRES	T1:	4 ■ 6 ☐	4 ☐ 6 ☐	4 ☐ 6 ☐
	T2:	4 ☐ 6 ☐	4 ☐ 6 ☐	4 ☐ 6 ☐

CALIBRATION HISTORY

		CALIBRATION HISTORY		LINEARIZATION HISTORY				
		EZ/EX VALUES (TRACK UNOCCUPIED)		HARDWIRE SHUNT AT TERMINATION SHUNT		HARDWIRE SHUNT AT 50 PERCENT POINT OF TRACK		
						NO LINEARIZATION	LINEARIZATION COMPLETE	
		EZ	EX	EZ VALUE	EZ/2 VALUE	EZ VALUE	STEP ±	EZ
EAST	TRACK 1							
WEST	TRACK 1							
EAST	TRACK 2							
WEST	TRACK 2							

REGION GULF	Illinois Central — COMMUNICATIONS & SIGNALS, ENGINEERING DEPARTMENT
DISTRICT SPARTA	
FILENAME 58990C03.CAD	SD 1022 C MP 589.90 TO 589.70
DESIGNER MKN / DATE 1/16/98	Sparta, IL
SHEET NO. 3 OF 15	Burns Ave GCP Application Info.

5 4 3 2 8-27-98 1 REVISIONS

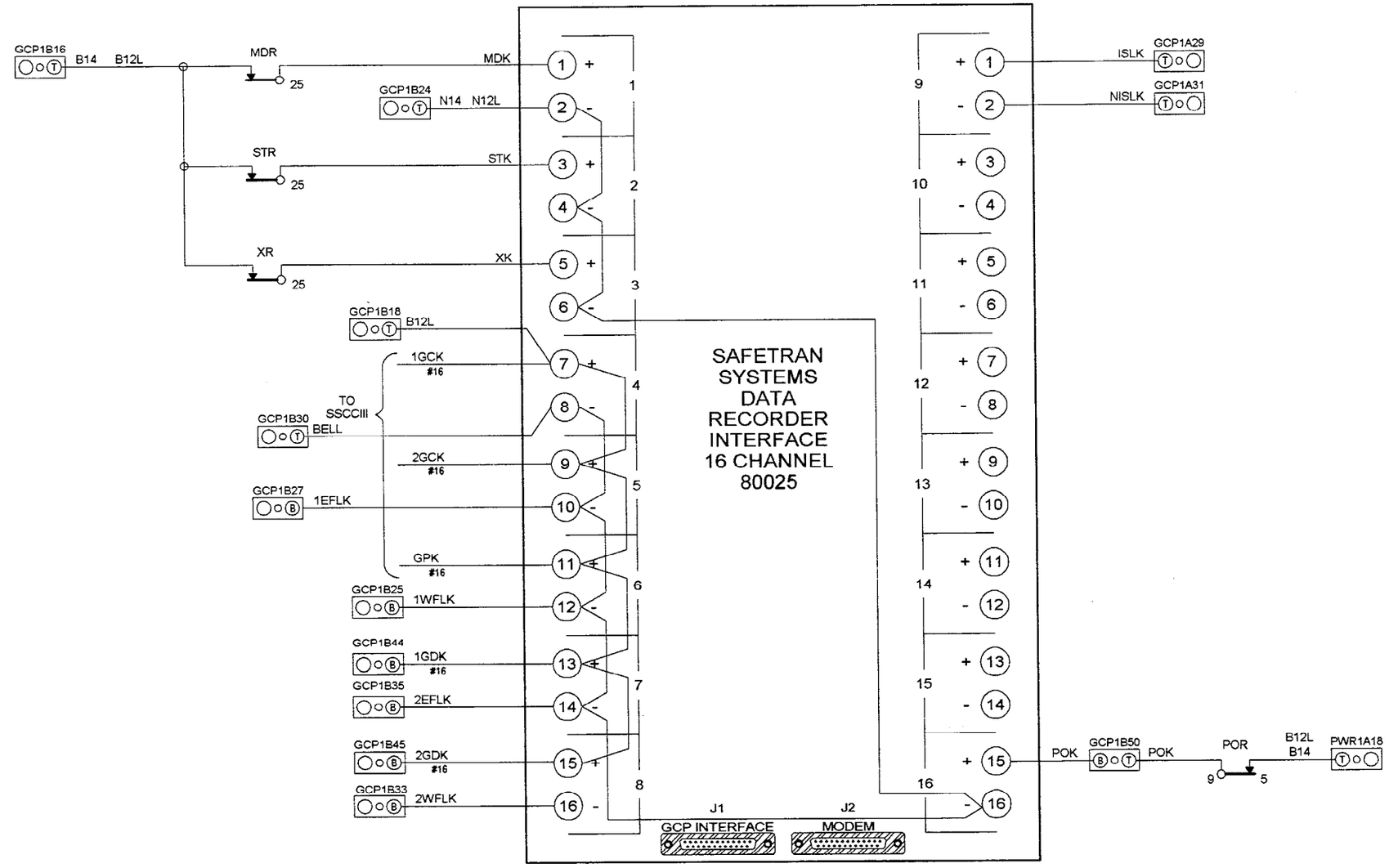

ALL WIRE THIS SHEET #16 AWG UNLESS OTHERWISE NOTED.

REGION GULF	Illinois Central	COMMUNICATIONS & SIGNALS, ENGINEERING DEPARTMENT
DISTRICT SPARTA		
FILENAME 58990C04.CAD	SD 1022 C	MP 589.90 TO 589.70
DESIGNER MKN / DATE 1/16/98	Sparta, IL	
SHEET NO. 4 OF 15	Burns Ave Data Recorder Interface	

5	4	3	2	8-27-98	1	REVISIONS

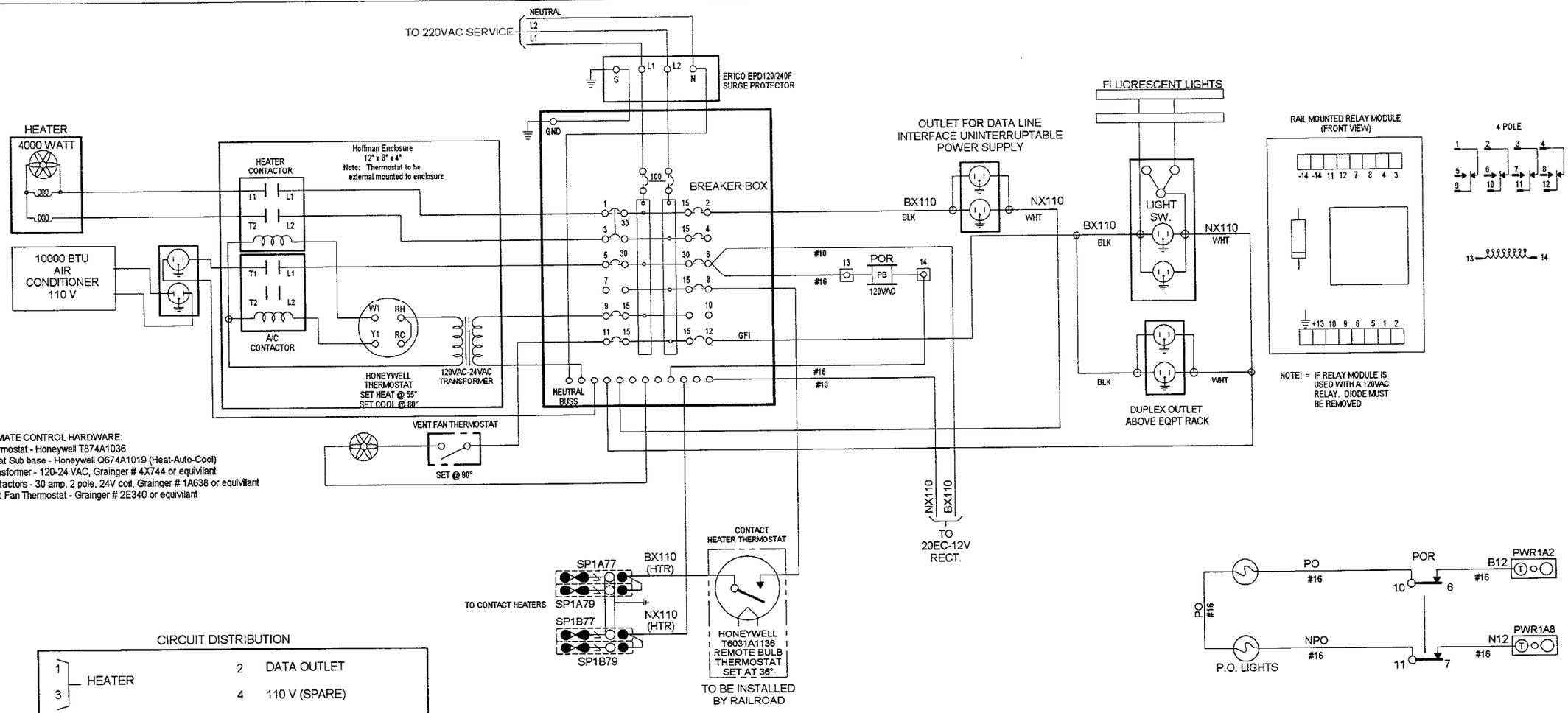

CIRCUIT DISTRIBUTION

1, 3	HEATER	2	DATA OUTLET
		4	110 V (SPARE)
		6	DC RECTIFIERS & POR
5, 7	A/C	8	CONTACT HEATERS
		10	110 V (SPARE)
		12	LIGHTS & OUTLETS
9	T-STAT CONTROL		
11	VENT FAN		

NOTE: ALL WIRING TO BE #12 THHN UNLESS OTHERWISE NOTED

REGION: GULF	Illinois Central — COMMUNICATIONS & SIGNALS, ENGINEERING DEPARTMENT
DISTRICT: SPARTA	
FILENAME: 58990C05.CAD	SD 1022 C MP 589.90 TO 589.70
DESIGNER: MKN / DATE: 1/16/98	Sparta, IL
SHEET NO. 5 OF 15	Burns Ave AC Power Distribution

5 | 4 | 3 | 2 | 8-27-98 | 1 | REVISIONS

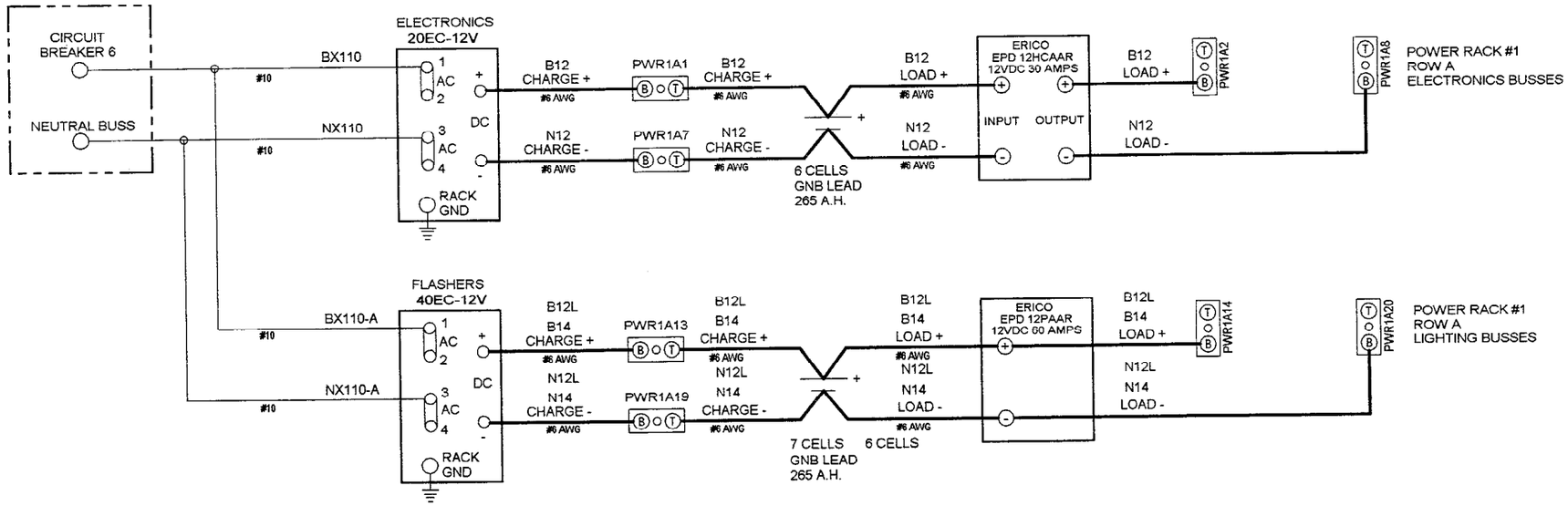

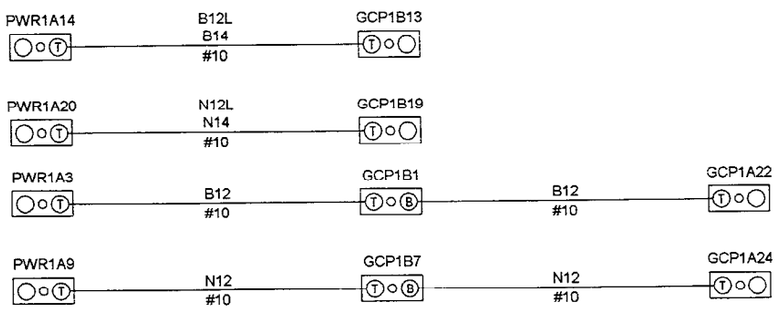

REGION GULF	Illinois Central	COMMUNICATIONS & SIGNALS, ENGINEERING DEPARTMENT
DISTRICT SPARTA		
FILENAME 58990C06.CAD	SD 1022 C	MP 589.90 TO 589.70
DESIGNER MKN / DATE 1/16/98	Sparta, IL	
SHEET NO. 6 OF 15	Burns Ave DC Power Distribution	

5 4 3 2 8-27-98 1 REVISIONS