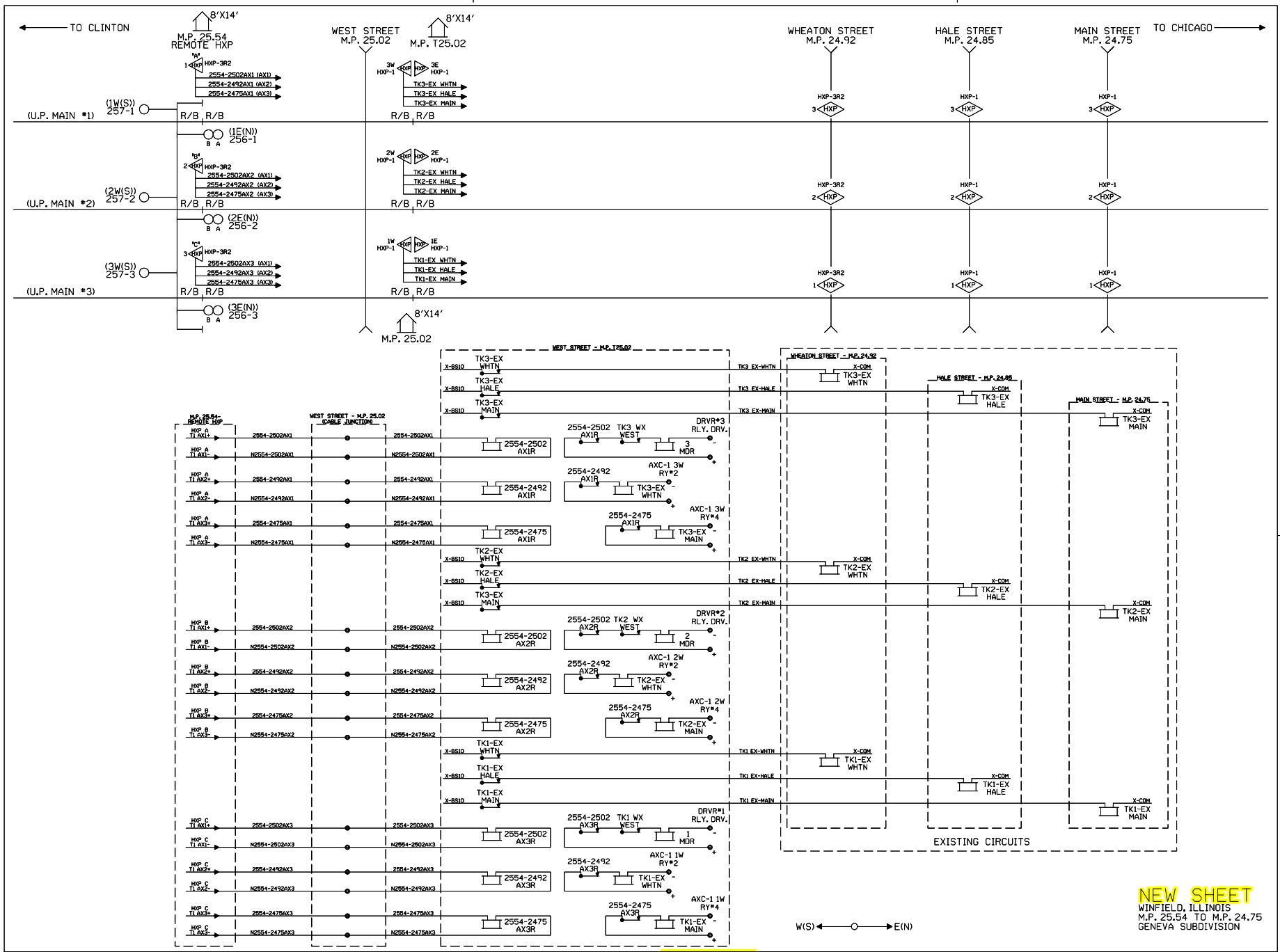

1	06-09-08
INSTALL HALF BLOCK SYSTEM FROM TURNER TO PARK, ILLINOIS. PHASE I PART I (MP. 29.50 TO MP. 25.54) AFE #88114	JJL
/	/CTC/MDF

UNION PACIFIC
QUALITY PRODUCTIVITY SAFETY
SIGNAL DESIGN

DES:	CTC
DIG:	CTC
CHK:	JJL
A.F.E.	88114
ID= GEN2502.DAX	

UNION PACIFIC RAILROAD

CHICAGO, ILLINOIS TO
CLINTON, IOWA
C.T.C. CIRCUITS

Office of Sr.AVP Engineering - Signal/TCO Omaha, Nebraska

DATE	06-09-08
SHEET	DAX
DWG	25.02
	GEN

(REV. 01.01.05) (4KDAXLAYOUT)

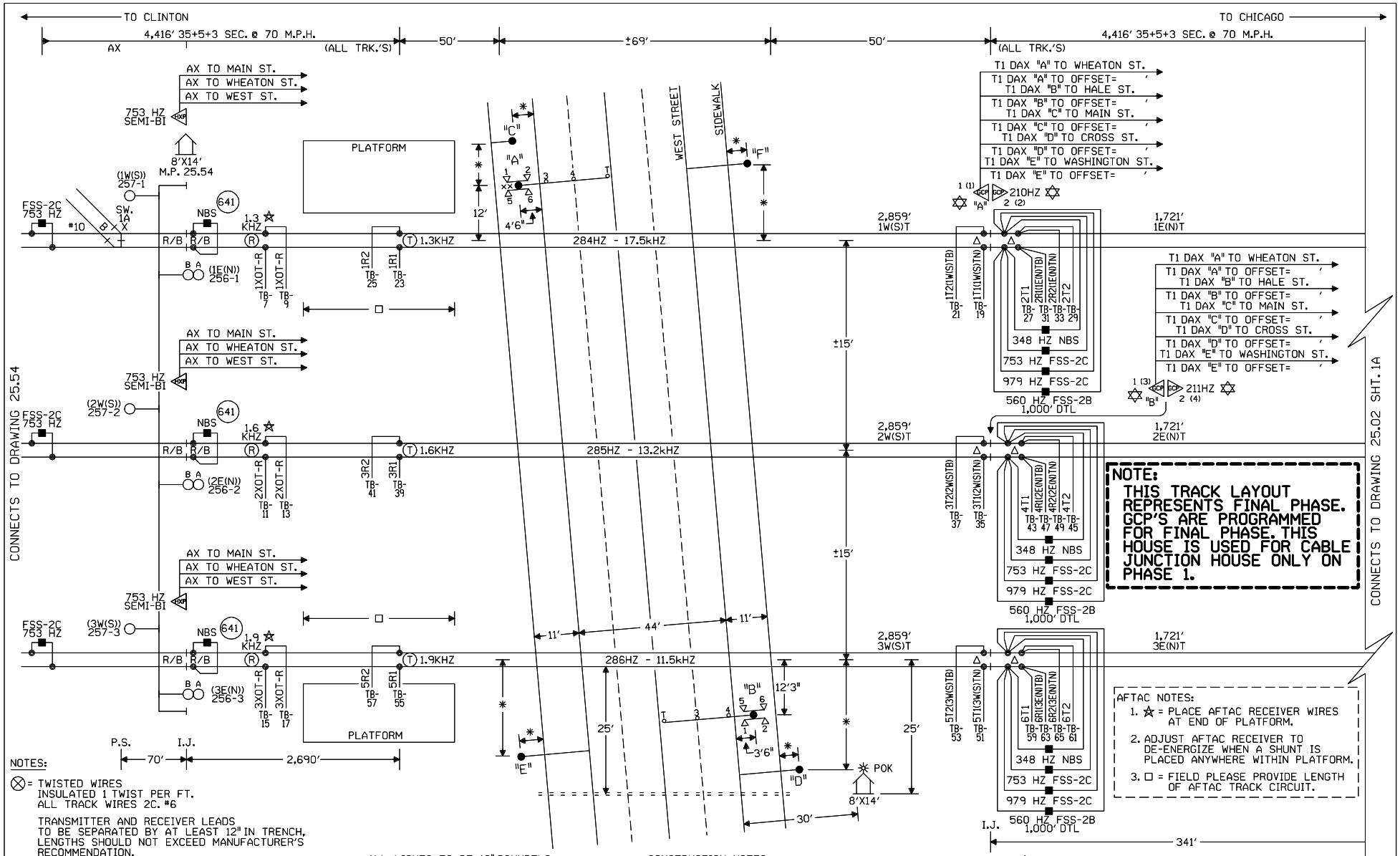

NOTES:

⊗ = TWISTED WIRES INSULATED 1 TWIST PER FT. ALL TRACK WIRES 2C. #6

TRANSMITTER AND RECEIVER LEADS TO BE SEPARATED BY AT LEAST 12" IN TRENCH. LENGTHS SHOULD NOT EXCEED MANUFACTURER'S RECOMMENDATION.

TOP OF FOUNDATION TO BE AT SAME ELEVATION AS THE SURFACE OF THE TRAVELED WAY & NO MORE THAN 4" ABOVE THE SURFACE OF THE GROUND.

ALL BUNGALOW WIRING TO BE #16 AWG FLEX UNLESS OTHERWISE SPECIFIED EXCEPT ALL GROUND WIRE TO BE #6 AWG FLEX OR LARGER.

ALL WIRING IN GATE MECHANISM TO BE #10 "AWG FLEX".

REFER TO UP STANDARD DWG FOR BUNGALOW GROUNDING.

PORTABLE GENERATOR EXTENSION CORD FOR 240V TO 240V IS PROVIDED AS WELL AS A 120V TO 240V ADAPTER.

☆ = GCP TO OPERATE IN SEMI-BI DIRECTIONAL MODE. USE TAB 627 COUPLER.

ALL LIGHTS TO BE 12" ROUNDELS.
= = = = = = 4" X 150' CONDUIT

LIGHTS: LED LIGHTS
GATE A: 24'
GATE B: 24'
← EXISTING

GATE C: ✱'
GATE D: ✱'
GATE E: ✱'
GATE F: ✱'
← FIELD TO PROVIDE GATE TYPE & LENGTHS.

CRTU = MICROBURST ← EXISTING
xx = BELL

CONSTRUCTION NOTES:

1. REUSE EXISTING GATES "A", "B", "C", "D", "E" & "F".
2. ORDER AND INSTALL (1)-INTERCONNECTION BOX (TAB 199) FOR NEW 8'X14' CROSSING HOUSE.
3. REUSE EXISTING CRTU AND ANTENNA FROM EXISTING WEST STREET XING HOUSE - M.P. 25.02.
4. ✱ = FIELD PROVIDE MEASUREMENTS.

△ FIELD ENSURE PROPER TRACK POLARITY AND "AC" ACCORDINGLY

W(S) ←—○—→ E(N)

NEW SHEET
WHEATON, ILLINOIS
WEST STREET
M.P. 25.02
GENEVA SUBDIVISION
D.O.T.#174 924K

1	07-23-09 INSTALL HALF BLOCK SYSTEM FROM TURNER TO PARK, ILLINOIS. PHASE 1 PART 1 (MP. 29.50 TO MP. 25.54) AFE #88114 JJL / /CTC/MDF	MODIFICATION LEVEL		UNION PACIFIC QUALITY PRODUCTIVITY SAFETY SIGNAL DESIGN	DES: CTC	UNION PACIFIC RAILROAD	DATE 07-23-09		
		Q. A. LAST LEVEL CHECKED	DQ		DIG: CTC	CHICAGO, ILLINOIS TO CLINTON, IOWA C.T.C. CIRCUITS	SHEET 1		
		LAST LEVEL MOD THIS TYPICAL	DQ		CHK: JJL		DWG 25.02		
		LAST LEVEL BY DESIGNER	DQ		A.F.E. 88114		GEN		
		CHANGED FROM TYPICAL?	Y		ID: GEN2502.1X	Office of Sr AVP Engineering - Signal/TCO Omaha, Nebraska			
		MEY 02.01.08 4K 1TKBG.1							

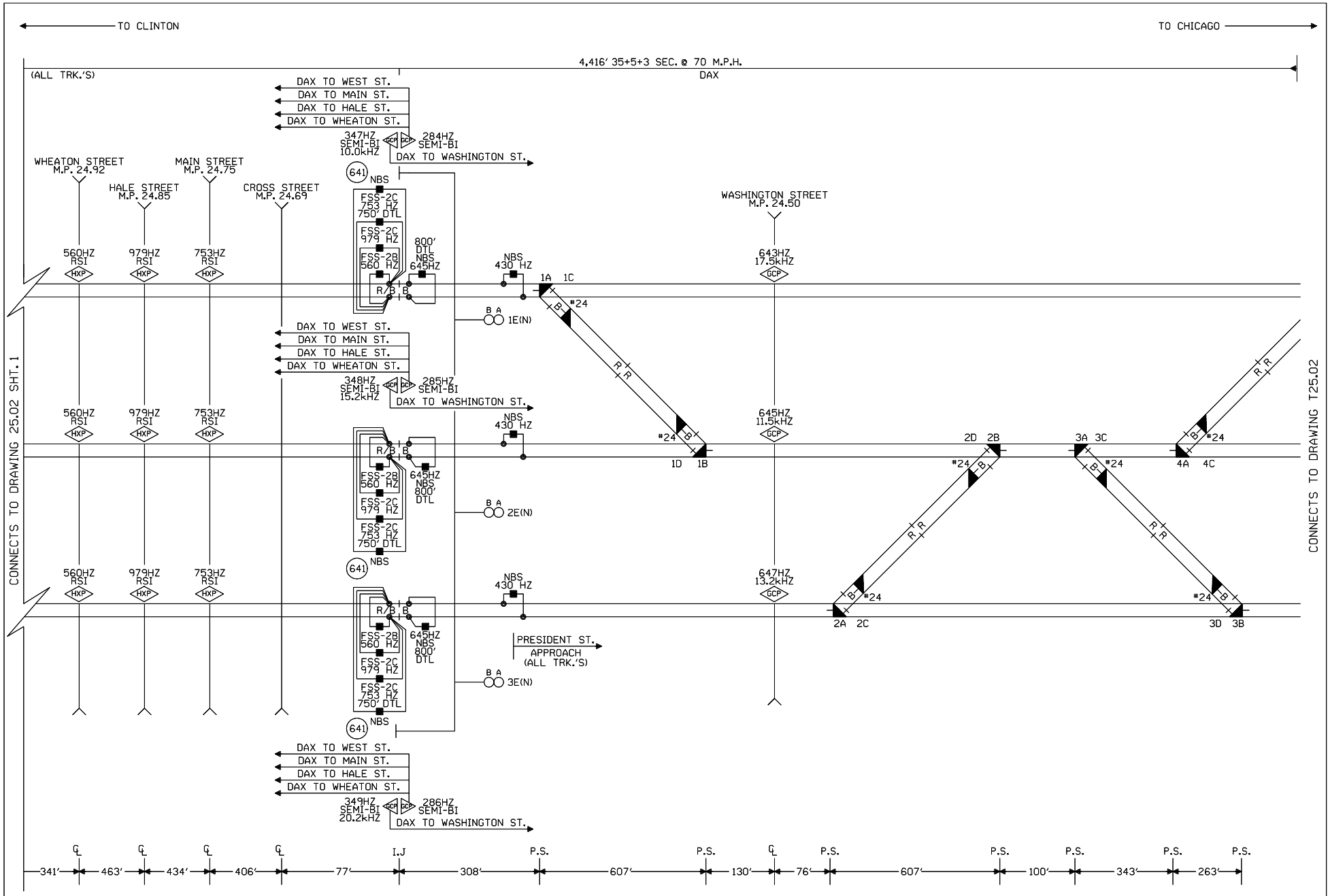

NEW SHEET
WHEATON, ILLINOIS
WEST STREET
M.P. 25.02
GENEVA SUBDIVISION
D.O.T.#174 924K

1 07-23-09 INSTALL HALF BLOCK SYSTEM FROM TURNER TO PARK, ILLINOIS. PHASE 1 PART 1 (MP. 29.50 TO MP. 25.54) AFE #88114 JJL / /CTC/MDF	MODIFICATION LEVEL		UNION PACIFIC QUALITY PRODUCTIVITY SAFETY SIGNAL DESIGN	DES: CTC
	Q. A. LAST LEVEL CHECKED	DQ		DIG: CTC
	LAST LEVEL MOD THIS TYPICAL	DQ		CHK: JJL
	LAST LEVEL BY DESIGNER	DQ		A.F.E. 88114
	CHANGED FROM TYPICAL?	Y		ID= GEN2502.1AX
	MEY 02.01.08 4K 1TKBG.1			

UNION PACIFIC RAILROAD
CHICAGO, ILLINOIS TO
CLINTON, IOWA
C.T.C. CIRCUITS
Office of Sr AVP Engineering - Signal/TCO Omaha, Nebraska

DATE 07-23-09
SHEET 1A
DWG 25.02
GEN

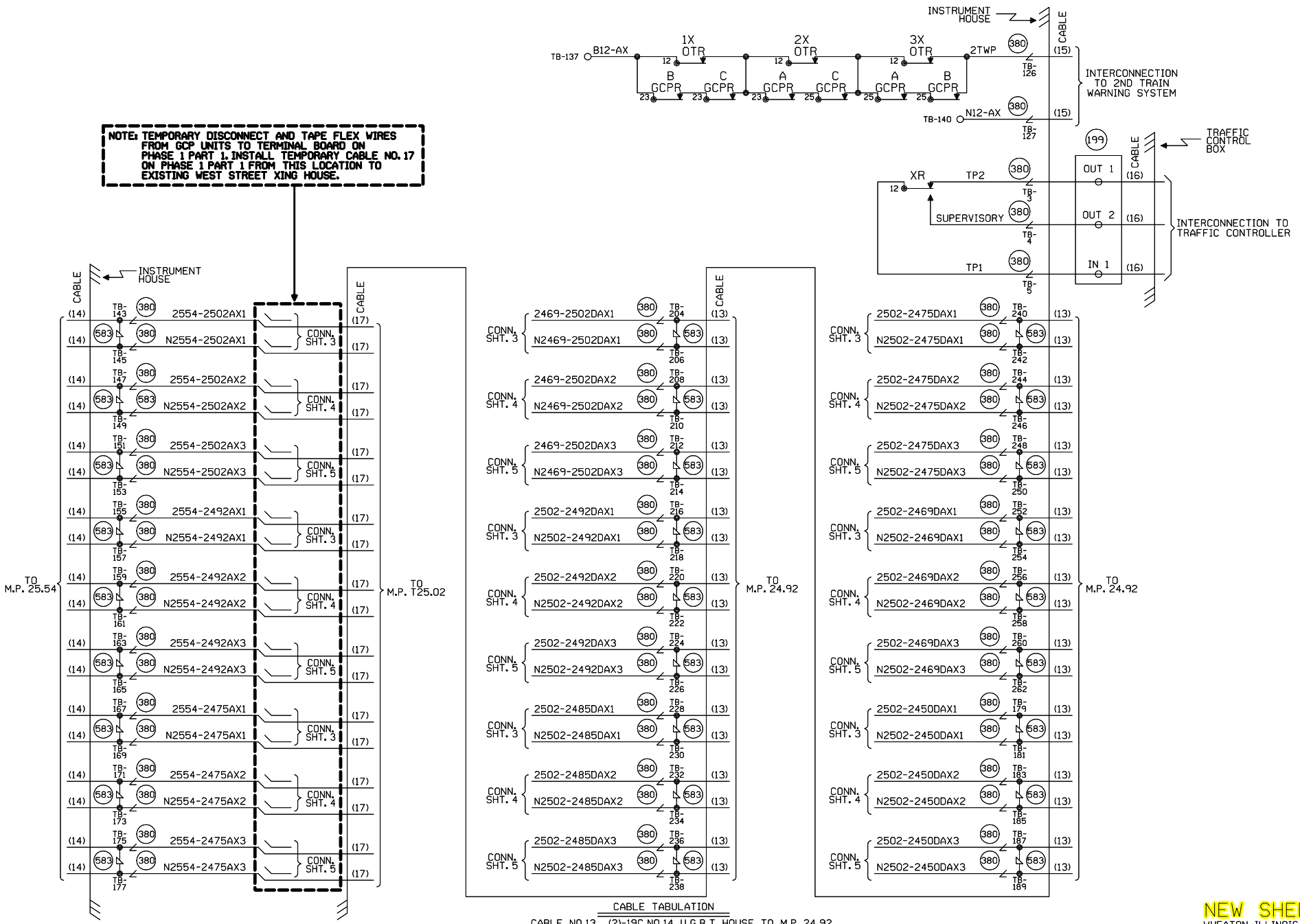

CABLE TABULATION

CABLE NO.13 (2)-19C.NO.14 U.G.B.T. HOUSE TO M.P. 24.92.
CABLE NO.14 19C.NO.14 U.G.B.T. HOUSE TO M.P. 25.54.
CABLE NO.15 HOUSE TO 2ND TRAIN WARNING SYSTEM.
CABLE NO.16 HOUSE INTERCONNECTION TO TRAFFIC CONTROLLER.
CABLE NO.17 19C.NO.14 U.G.B.T. HOUSE TO M.P. T25.02.
CABLE NO.18 TO BE DETERMINED BY NATIONAL STANDARD ELECTRICAL CODE.

NEW SHEET
WHEATON, ILLINOIS
WEST STREET
M.P. 25.02
GENEVA SUBDIVISION
D.O.T.#174 924K

1	07-23-09
INSTALL HALF BLOCK SYSTEM FROM TURNER TO PARK, ILLINOIS. PHASE I PART I (MP. 29.50 TO MP. 25.54) AFE #88114	JJL
/	/CTC/MDF

UNION PACIFIC
QUALITY PRODUCTIVITY SAFETY
SIGNAL DESIGN

DES:	CTC
DIG:	CTC
CHK:	JJL
A.F.E.	88114
ID= GEN2502.1BX	

UNION PACIFIC RAILROAD
CHICAGO, ILLINOIS TO CLINTON, IOWA
C.T.C. CIRCUITS
Office of Sr AVP Engineering - Signal/TCO Omaha, Nebraska

DATE	07-23-09
SHEET	1B
DWG	25.02
	GEN

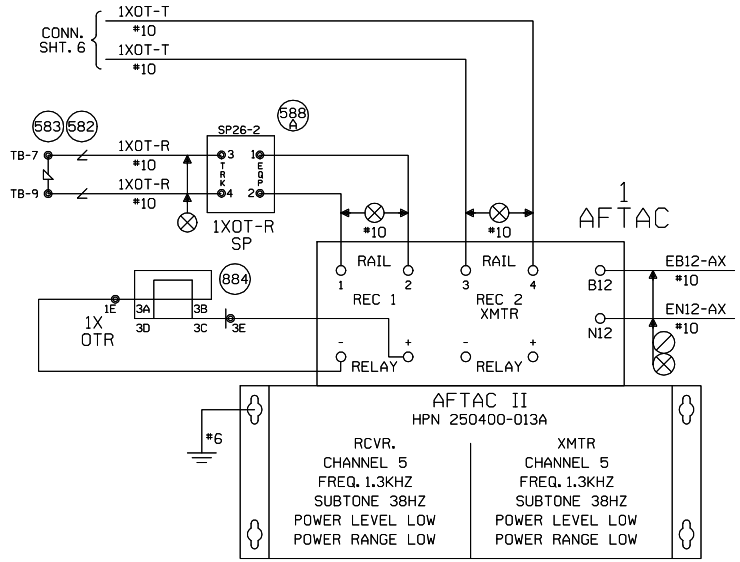

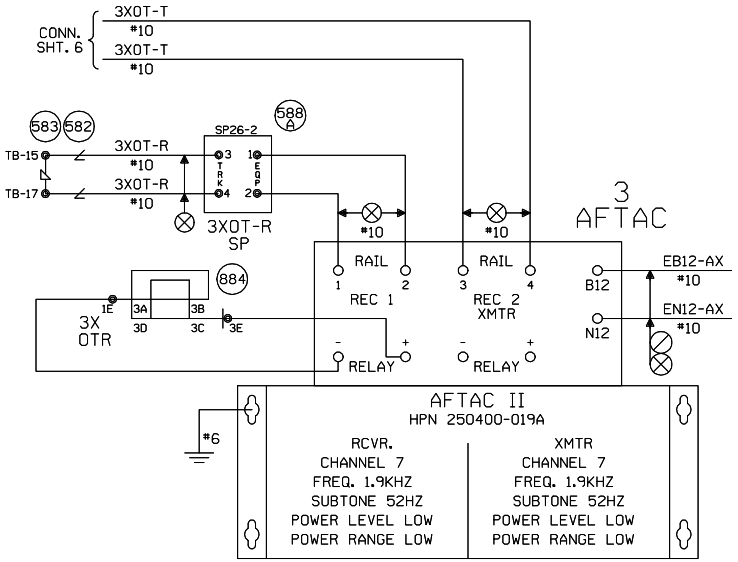

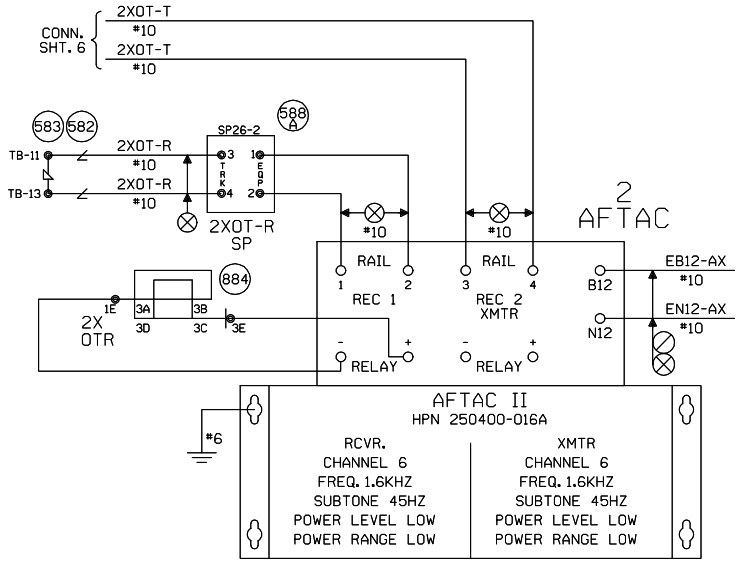

NEW SHEET

WHEATON, ILLINOIS
WEST STREET
M.P. 25.02
GENEVA SUBDIVISION
D.O.T.#174 924K

1 07-23-09
INSTALL HALF BLOCK SYSTEM FROM TURNER TO PARK, ILLINOIS. PHASE I PART I (MP. 29.50 TO MP. 25.54) AFE #88114
/ /CTC/MDF JJL

UNION PACIFIC
QUALITY PRODUCTIVITY SAFETY
SIGNAL DESIGN

DES:	CTC
DIG:	CTC
CHK:	JJL
A.F.E.	88114
ID= GEN2502.1CX	

UNION PACIFIC RAILROAD

CHICAGO, ILLINOIS TO
CLINTON, IOWA
C.T.C. CIRCUITS

Office of Sr AVP Engineering - Signal/TCO Omaha, Nebraska

DATE	07-23-09
SHEET	1C
DWG	25.02
	GEN