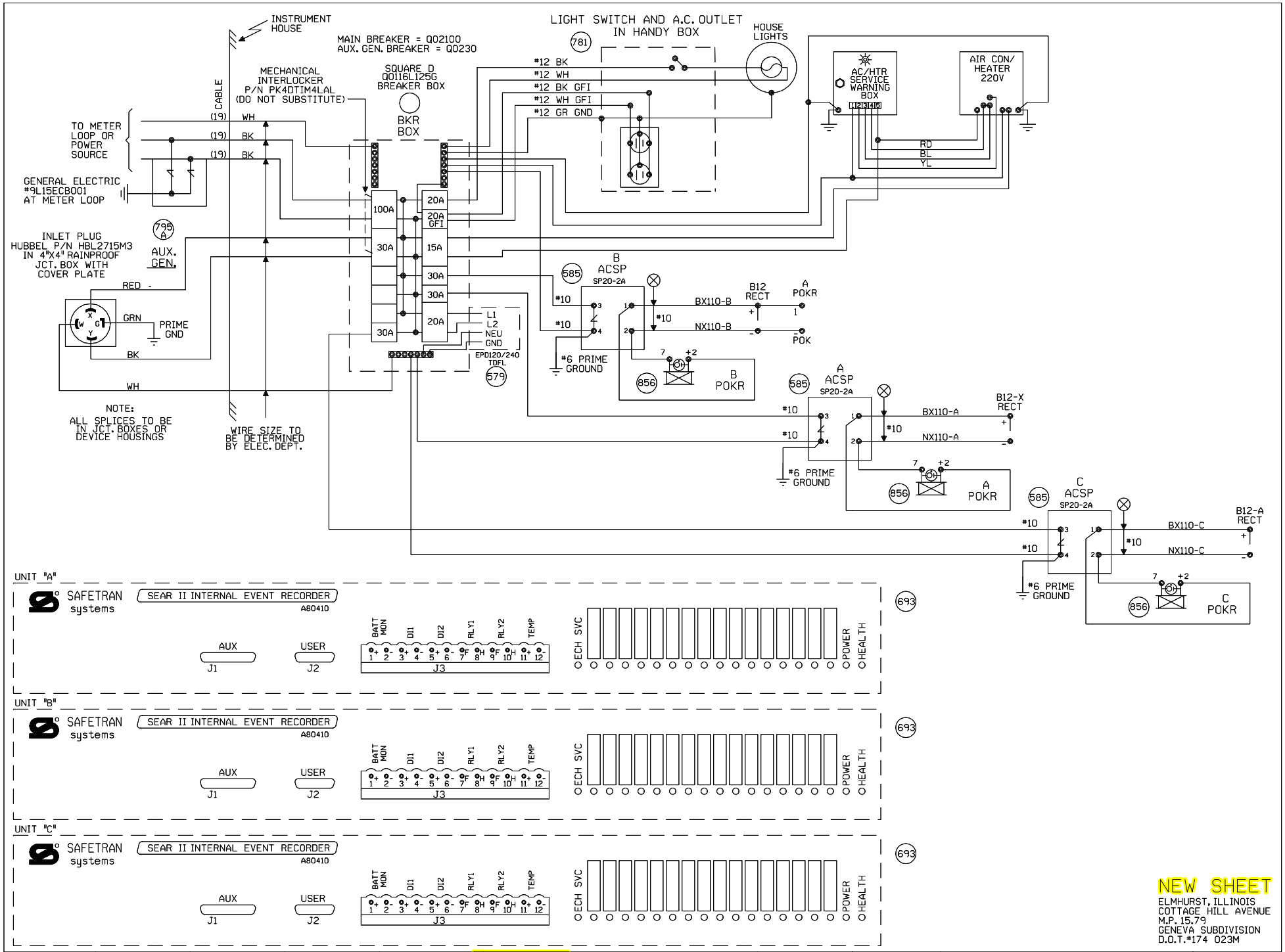

NEW SHEET
ELMHURST, ILLINOIS
COTTAGE HILL AVENUE
M.P. 15.79
GENEVA SUBDIVISION
D.O.T.#174 023M

1	07-23-09	MODIFICATION LEVEL		UNION PACIFIC	DES: CTC	UNION PACIFIC RAILROAD	DATE 07-23-09
INSTALL HALF BLOCK SYSTEM FROM VILLA PARK TO PARK, ILLINOIS. PHASE 3 PART 3 (MP. 18.24 TO MP. 15.50) AFE #89951	DLD /CTC/MDF	Q. A. LAST LEVEL CHECKED	DQ	QUALITY PRODUCTIVITY SAFETY	DIG: CTC	CHICAGO, ILLINOIS TO CLINTON, IOWA C.T.C. CIRCUITS	SHEET 2
		LAST LEVEL MOD THIS TYPICAL	DQ	SIGNAL DESIGN	CHK: DLD		DWG 15.79
		LAST LEVEL BY DESIGNER	DQ		A.F.E. 89951		GEN
		CHANGED FROM TYPICAL?	Y		ID= GEN1579.2X	Office of Sr AVP Engineering - Signal/TCO Omaha, Nebraska	
		REV 02.01.08 4K SEARAC.2					

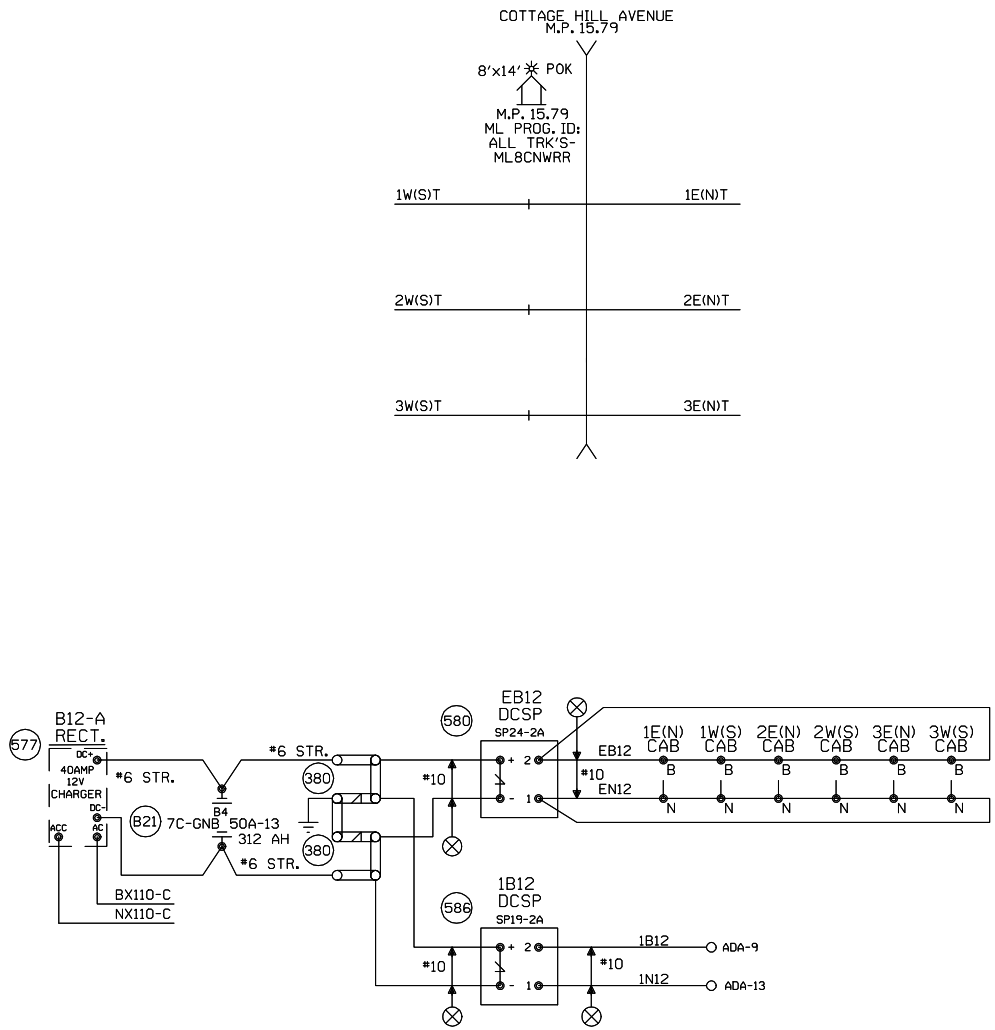

NEW SHEET

ELMHURST, ILLINOIS
COTTAGE HILL AVENUE
M.P. 15.79
GENEVA SUBDIVISION
D.O.T.#174 023M

1	07-23-09
INSTALL HALF BLOCK SYSTEM FROM VILLA PARK TO PARK, ILLINOIS. PHASE 3 PART 3 (MP. 18.24 TO MP. 15.50) AFE #89951	
	DLD
/	/CTC/MDF

MODIFICATION LEVEL	
Q. A. LAST LEVEL CHECKED	DQ
LAST LEVEL MOD THIS TYPICAL	DQ
LAST LEVEL BY DESIGNER	DQ
CHANGED FROM TYPICAL?	Y
REV 02/01/08 2TMLINTC.4	

UNION PACIFIC
QUALITY PRODUCTIVITY SAFETY
SIGNAL DESIGN

DES:	CTC
DIG:	CTC
CHK:	DLD
A.F.E.	89951
ID= GEN1579.2AS	

UNION PACIFIC RAILROAD

CHICAGO, ILLINOIS TO
CLINTON, IOWA
C.T.C. CIRCUITS

Office of Sr AVP Engineering - Signal/TCO Omaha, Nebraska

DATE	07-23-09
SHEET	2A
DWG	15.79
	GEN

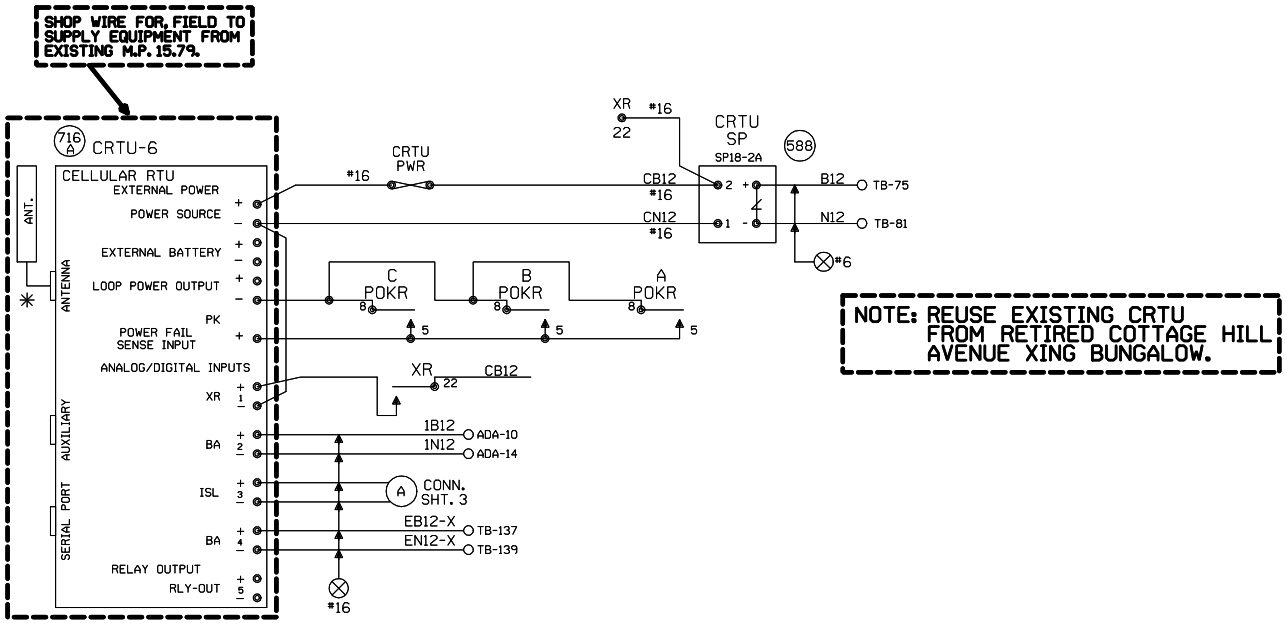

NOTES:
ALL DIODES 1N5060 OR 1N4004 UNLESS OTHERWISE NOTED.
✳ MOUNT ANTENNA ON TOP OF HOUSE.
ALL WIRES #18 UNLESS OTHERWISE NOTED.
ALL UNUSED 'NC' INPUTS MUST BE TIED HIGH TO BATTERY
ALL UNUSED ANALOG INPUTS MUST BE TIED HIGH TO BATTERY
ALL UNUSED 'NO' INPUTS MUST BE DISCONNECTED
NORMAL STATE FOR ANALOG CHANNELS IS EQUAL TO THE STORED NOMINAL VOLTAGE +120% OR -81%
CRTU FRONT PANEL DISPLAY CHART INDICATES NORMAL STATE
■ DIGITAL INPUT HIGH, OR POWER FAIL INPUT CLOSED □ DIGITAL INPUT LOW, OR POWER FAIL INPUT OPEN

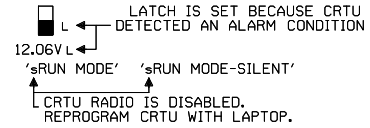

UNIT INSTALLATION AND SETUP

R.R. SITE ID WHERE; SSSS = 4 CHARACTER SUBDIVISION ID. FILL WITH PRECEDING ZEROS AS REQUIRED. THE MAIN TRACK SUBDIVISION ID* IS IN THE CURRENT TIMETABLE. INDUSTRIAL LEADS, LEASED, AND LEAD TRACKS LISTED WITHIN THE SUBDIVISION MAY HAVE THEIR OWN UNIQUE SUBDIVISION ID*. ALWAYS REFER TO CURRENT PRINTED COPY OF THE TIMETABLE.
LLLLLLLL = 8 CHARACTERS USE DOT* AT CROSSINGS, AND
WDLLLLLL = USE 'WD' THEN MP* AT WAYSIDE LOCATIONS.
EXAMPLE = 0785WD1801.5UT
HBLLLLLL = USE 'HB' THEN MP* AT HBD SITES.
EXAMPLE = 0100-HB55.62TX
THE MP* MUST USE A DECIMAL POINT TO SEPARATE NUMBERS. FILL WITH PRECEDING DASHES AS REQUIRED.
AA = 2 CHARACTER STATE NAME FOR ALL LOCATIONS.
MUST BE 14 CHARACTERS LONG, NO SPACES ALLOWED.

SITE IDENTIFIER: SSSSLLLLLLLLAA	0001-174023MIL
OPERATION TO RESUME:	RUN
SIGNAL STRENGTH dBm	85dBm
CARRIER ID	00020
FIRMWARE VERSION	2.3.06
BOOT VERSION:	
CMM VERSION:	
SERIAL NUMBER	03-03110-2801
MIN ASSIGNMENT	
ESN: (MICROBURST ONLY)	
CONFIGURATION NET	MICROBURST
SILENCE INTERVAL	60 MINUTES
HEALTHCHECK INTERVAL	EVERY 2 DAYS
ALARM DEFER DELAY	240 MINUTES (4 HOURS)
SIGNAL STATUS	GOOD
SCADANET STATUS	GOOD
CALIBRATION CONSTANT CH1	
CALIBRATION CONSTANT CH2	7.48VDC
CALIBRATION CONSTANT CH3	
CALIBRATION CONSTANT CH4	
CALIBRATION CONSTANT PS	13.27VDC

FIELD PROVIDES: SAMPLED NOMINAL VOLTAGES, SCADANET STATUS CALIBRATION CONSTANTS, SERIAL NUMBER, AND SIGNAL STATUS.

CHANNEL SETUP - STANDARD CONFIGURATION 14:XR,Ba,ISL,Ba

CHANNEL NORMAL STATE	SENSE (NO/NC)	NAME FUNCTION	RECOGNITION DELAY SECONDS ACTIVE	RECOGNITION DELAY SECONDS NORMAL	RETURN TO NORMAL	REPORTING MODE	ALARM LINKED CHANNEL	ALARM LINKED CRITERIA	EVENT LOGGING ENABLED OPTIONS
POWER FAIL (CH5) ■	POWER FAIL DETECT NO	PFin-PK AC POWER FAIL	7,200 ALARM	300 NORMAL	ENABLED	ALERT	DISABLED	N/A	
CH1 □	DIGITAL INPUT NO	CH1-XR XR DOWN TO LONG	1,800 ALARM	1 NORMAL	ENABLED	ALERT	DISABLED	N/A	
CH2 STORED NOMINAL VOLTAGE	ANALOG INPUT N/A	CH2-Ba/V BATTERY MONITOR BATTERY LOW	600 ALARM	1200 NORMAL	ENABLED	ALERT W/UPDATE	DISABLED	N/A	
CH3 ■	DIGITAL INPUT NC	CH3-ISL ISLAND OCCUPIED DAX, PREEMPT WARNING TIME	1 ACTIVE	1 NORMAL	DISABLED	STATUS ONLY	DISABLED	N/A	DIGITAL EVENTS
CH4 STORED NOMINAL VOLTAGE	ANALOG INPUT N/A	CH4-Ba/V BATTERY MONITOR BATTERY LOW	600 ALARM	1200 NORMAL	ENABLED	ALERT W/UPDATE	DISABLED	N/A	CH1-XR CH3-ISL
POWER SOURCE (CH6)	ANALOG INPUT N/A	PS-Ba/V BATTERY MONITOR BATTERY LOW	600 ALARM	1200 NORMAL	ENABLED	ALERT W/UPDATE	DISABLED	N/A	

ANALOG CHANNEL	USEFUL RANGE VOLTS LOW	USEFUL RANGE VOLTS HIGH	DISPLAYED RANGE VOLTS LOW	DISPLAYED RANGE VOLTS HIGH	RELATIVE ALARM POINT LOW	RELATIVE ALARM POINT HIGH	ABSOLUTE ALARM POINT LOW	ABSOLUTE ALARM POINT HIGH	AUTOMATIC UPDATE INTERVAL	STORED NOMINAL VOLTAGE	SAMPLED NOMINAL VOLTAGE
CH2	0.0	30.00	0.0	30.00	81%	120%	10.0	29.0	14 DAYS	12.69	
CH4	0.0	30.00	0.0	30.00	81%	120%	10.0	29.0	14 DAYS	12.69	
POWER SOURCE	0.0	30.00	0.0	30.00	81%	120%	10.0	29.0	14 DAYS	12.69	
RELAY OUTPUT	NAME RLY-OUT		ACTIVE SET-UP-OPEN		NORMAL CLR-DN-CLOSE		PULSE DURATION		15 SECONDS	StdCfg Ver: 2.3.3 REV'D 9-20-02	

MAINTENANCE OPERATIONS

TO START OR ABORT ANY PROCEDURE
1. PRESS THE 'CANCEL' BUTTON FIRST

WHEN RESPONDING TO A CALL, PUT THE CRTU IN THE 'SILENCE ALARMS' MODE
1. PRESS 'SELECT' AND THEN '+ ARROW' BUTTON UNTIL
   DISPLAY: ACTION?
   SILENCE ALARMS
2. PRESS THE 'SELECT' BUTTON TWICE
3. CORRECT PROBLEM AND SIMULATE NORMAL TRAIN MOVEMENT THROUGH THE LOCATION
4. EXAMINE EACH CHANNEL ON THE CRTU
5. PRESS THE '+/- ARROW' BUTTON
   VERIFY ALL CHANNELS INDICATE A NORMAL STATE
NORMAL STATES ARE ON THE CHANNEL SETUP CHART

CLEAR TIMERS, LATCHES AND SEND ALL NORMAL
1. DO STEPS #1 - #5 ABOVE, AND PRESS 'CANCEL'.
2. PRESS 'SELECT' AND THEN '- ARROW' BUTTON UNTIL
   DISPLAY: ACTION?
   SERVICE MODE
3. PRESS 'SELECT' AGAIN TO RESET TIMERS, AND IF
   DISPLAY: SERVICE MODE
   ALL NORMAL
4. PRESS 'SELECT' AGAIN TO CLEAR LATCHES, AND SEND ALL NORMAL. SKIP STEPS #5-#6.
5. HOWEVER, IF ALARMS ARE NOT CLEARED;
   DISPLAY: SERVICE MODE
   ALARMS PENDING/PRESENT
6. PRESS 'CANCEL', CORRECT PROBLEM AND REPEAT STEPS #2 THRU #5 UNTIL ALL NORMAL SENT.

TO CANCEL THE 'SILENCE ALARMS' MODE
1. PRESS 'SELECT' AND THEN '+ ARROW' BUTTON UNTIL
   DISPLAY: ACTION?
   CANCEL SILENCE
2. PRESS THE 'SELECT' BUTTON AGAIN

EXAMINE & SET BATTERY VOLTAGE NOMINAL VALUE
1. PRESS THE '+ ARROW' OR '- ARROW' BUTTON UNTIL THE DESIRED CHANNEL IS DISPLAYED.
   DISPLAY: PS-Ba:
   13.83V NORMAL
2. VERIFY THE DISPLAYED READING WITH A DIGITAL VOLTMETER
3. PRESS THE 'SELECT' BUTTON, AND THE CRTU DISPLAY WILL SWITCH BETWEEN CURRENT/SAVED NOMINAL VOLTAGE VALUES.
   DISPLAY: NOMINAL ON #6? (CURRENT)
   13.83
   DISPLAY: SAVED NOMINAL 6 (STORED)
   12.69
4. PRESS THE 'SELECT' BUTTON AND THE CURRENT OR 'NOMINAL ON' VALUE WILL BE SAMPLED AND STORED AS THE 'SAVED NOMINAL' VALUE
5. VERIFY THE 'NOMINAL ON' AND 'SAVED NOMINAL' VALUES ARE EQUIVALENT, REPEAT STEPS #1 THRU #3 & PRESS THE 'CANCEL' BUTTON.

NEW SHEET
ELMHURST, ILLINOIS
COTTAGE HILL AVENUE
M.P. 15.79
GENEVA SUBDIVISION
D.O.T.#174 023M

1 07-23-09
INSTALL HALF BLOCK SYSTEM FROM VILLA PARK TO PARK, ILLINOIS. PHASE 3 PART 3 (MP. 18.24 TO MP. 15.50) AFE #89951
DLD
/ /CTC/MDF

UNION PACIFIC
QUALITY PRODUCTIVITY SAFETY
SIGNAL DESIGN

DES:	CTC
DIG:	CTC
CHK:	DLD
A.F.E.	89951
ID:	GEN1579.2BX

UNION PACIFIC RAILROAD
CHICAGO, ILLINOIS TO CLINTON, IOWA
C.T.C. CIRCUITS
Office of Sr AVP Engineering - Signal/TCO Omaha, Nebraska

DATE	07-23-09
SHEET	2B
DWG	15.79
	GEN

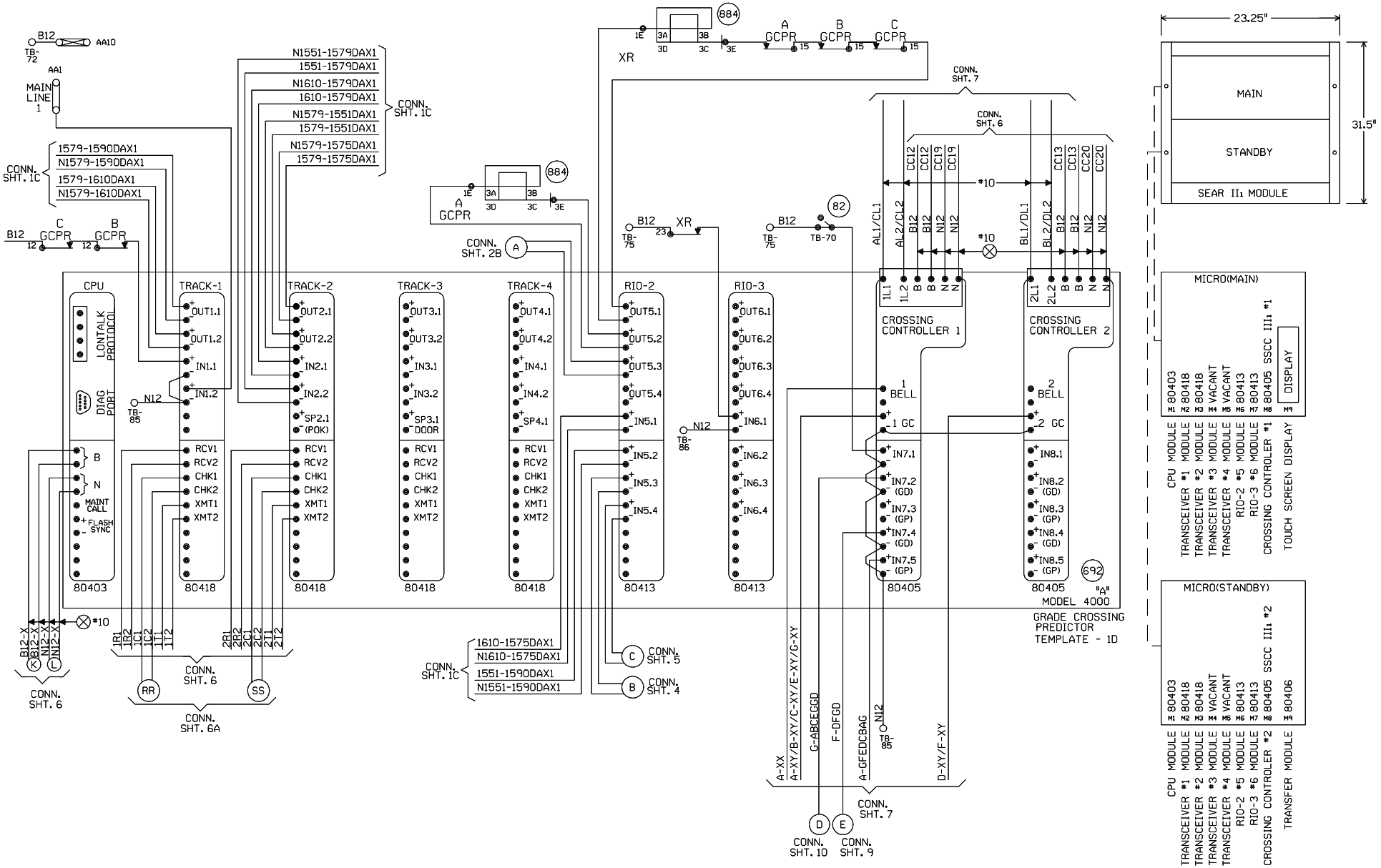

"Mf" FREQUENCY (HZ)	MAXIMUM TRANSMIT WIRE LENGTH (FEET)
86	100
114	125
156	150
211	200
285-970	250

NOTE:
EACH TRANSMITTER TO RAIL WIRE FROM XMT1 AND XMT2 MUST NOT EXCEED THE MAXIMUM LENGTH SPECIFIED IN THE TABLE SHOWN. THE RECEIVER WIRE LENGTH IS NOT CRITICAL. DOES NOT APPLY TO 6 TRACK WIRE APPLICATION.

NEW SHEET
ELMHURST, ILLINOIS
COTTAGE HILL AVENUE
M.P. 15.79
GENEVA SUBDIVISION
D.O.T.#174 023M

1 07-23-09 INSTALL HALF BLOCK SYSTEM FROM VILLA PARK TO PARK, ILLINOIS. PHASE 3 PART 3 (MP. 18.24 TO MP. 15.50) AFE #89951 DLD /CTC/MDF	MODIFICATION LEVEL		UNION PACIFIC QUALITY PRODUCTIVITY SAFETY SIGNAL DESIGN	DES: CTC DIG: CTC CHK: DLD A.F.E. 89951 ID= GEN1579.3X	UNION PACIFIC RAILROAD CHICAGO, ILLINOIS TO CLINTON, IOWA C.T.C. CIRCUITS Office of Sr AVP Engineering - Signal/TCO Omaha, Nebraska	DATE 07-23-09 SHEET 3 DWG 15.79 GEN
	Q. A. LAST LEVEL CHECKED	DQ				
	LAST LEVEL MOD THIS TYPICAL	DQ				
	LAST LEVEL BY DESIGNER	DQ				
	CHANGED FROM TYPICAL?	Y				
	REV 02.01.08 4K 4TKB4GF.3					

Minimum Program Steps Report

Location and SIN

DOT Number: 174023M
Milepost Number: 15.79
Site Name: ELMHURST, IL

SIN: 762010010016 *

* Parameter is part of office check number calculation.

MCF and Template Selection

MCF Name: GCP-T6X-02-1.mcf
MCF Revision: 021
MCFCRC: 6076E435

Template = 1D:3 Uni pairs *

* Parameter is part of office check number calculation.

Minimum Program Steps

TEMPLATE: module configuration
Track 5/RIO 2 Slot = RIO *
Track 6/RIO 3 Slot = RIO *

TEMPLATE: preemption
Preempt Logic = Simult *

TEMPLATE: track 1-Uni, Island
Track 1 : GCP Frequency = 643 Hz
Track 1 : Approach Distance = 1553 ft
Track 1 : Prime Warning Time = 32 sec
Track 1 : Prime UAX = IP *
Track 1 : Prime UAX Pickup = 15 sec *
Track 1 : GCP Transmit Level = High
Track 1 : Uni/Bi/Sim-Bidirnl = Sim. Bidirnl *
Track 1 : Isl Frequency = 13.2 kHz
Track 1 : Island Distance = 207 ft

TEMPLATE: track 1 Daxes
Track 1 : Dax A Used = Yes *
Track 1 : Dax A Warning Time = 28 sec
Track 1 : Dax A Offset Distance = 685 ft
Track 1 : Dax B Used = Yes *
Track 1 : Dax B Warning Time = 28 sec
Track 1 : Dax B Offset Distance = 1929 ft

TEMPLATE: track 2-Uni,No Island
Track 2 : GCP Frequency = 284 Hz
Track 2 : Approach Distance = 1859 ft
Track 2 : Prime Warning Time = 32 sec
Track 2 : Prime UAX = IP *
Track 2 : Prime UAX Pickup = 15 sec *
Track 2 : GCP Transmit Level = High
Track 2 : Uni/Bi/Sim-Bidirnl = Sim. Bidirnl *

TEMPLATE: track 2 Daxes
Track 2 : Dax A Used = Yes *
Track 2 : Dax A Warning Time = 28 sec
Track 2 : Dax A Offset Distance = 614 ft
Track 2 : Dax B Used = Yes *
Track 2 : Dax B Warning Time = 27 sec
Track 2 : Dax B Offset Distance = 1629 ft

TEMPLATE: track Anding
AND 2 Used = Yes *
AND 3 Used = Yes *
AND 4 Used = Yes *

TEMPLATE: AND 1 XR
AND 1 Enable Used = Yes *

TEMPLATE: AND 2
AND 2 Track 1 = Dax A *
AND 2 Enable Used = Yes *

TEMPLATE: AND 3
AND 3 Track 2 = Dax A *
AND 3 Enable Used = Yes *

TEMPLATE: AND 4
AND 4 Track 1 = Isl Only *
AND 4 Enable Used = Yes *

TEMPLATE: SSCC
SSCC 1 : Lamp Neutral Test = Off (Set in Field)
SSCC 2 : Lamp Neutral Test = Off (Set in Field)

TEMPLATE: OOS
OOS Control = OOS IPs *
T2 OOS Control = OOS Input 1 *

TEMPLATE: OP assignment 1
OUT 1.1 = AND 2 *
OUT 1.2 = T1 Dax B *
OUT 2.1 = AND 3 *
OUT 2.2 = T2 Dax B *

TEMPLATE: OP assignment 2
OUT 5.1 = Sim Preempt *
OUT 5.2 = AND 5 *
OUT 5.3 = AND 4 *

TEMPLATE: IP assignment 1
IN 1.1 = AND 1 XR Enable *
IN 1.2 = Out Of Service IP 1 *
IN 2.1 = T2 Prime UAX *
IN 2.2 = T1 Prime UAX *

TEMPLATE: IP assignment 2
IN 5.1 = AND 3 Enable *
IN 5.2 = AND 2 Enable *
IN 5.3 = AND 4 Enable *
IN 5.4 = AND 4 Enable *
IN 6.1 = Preempt Health *

TEMPLATE: IP assignment SSCC
IN 7.1 = AND 1 XR Enable *

GCP: track 1
Track 1 : GCP Freq Category = Offset *

GCP: track 2
Track 2 : GCP Freq Category = Offset *

AND: track Anding
AND 5 Used = Yes *

AND: AND 5
AND 5 Track 1 = Prime *
AND 5 Track 2 = Prime *

* Parameter is part of office check number calculation.

Check Numbers

Office Check No. (DT 4.6.0): 01D7F0E4
Office Check Number: 01D7F0E4
Config. Check Number: 0BA4818D
(Based on MCF Revision 021)

Parameters not part of office check number calculation:

Track 1 : GCP Frequency = 643 Hz
Track 1 : Approach Distance = 1553 ft
Track 1 : Prime Warning Time = 32 sec
Track 1 : GCP Transmit Level = High
Track 1 : Isl Frequency = 13.2 kHz
Track 1 : Island Distance = 207 ft
Track 1 : Dax A Warning Time = 28 sec
Track 1 : Dax A Offset Distance = 685 ft
Track 1 : Dax B Warning Time = 28 sec
Track 1 : Dax B Offset Distance = 1929 ft
Track 2 : GCP Frequency = 284 Hz
Track 2 : Approach Distance = 1859 ft
Track 2 : Prime Warning Time = 32 sec
Track 2 : GCP Transmit Level = High
Track 2 : Dax A Warning Time = 28 sec
Track 2 : Dax A Offset Distance = 614 ft
Track 2 : Dax B Warning Time = 27 sec
Track 2 : Dax B Offset Distance = 1629 ft
SSCC 1 : Lamp Neutral Test = Off (Set in Field)
SSCC 2 : Lamp Neutral Test = Off (Set in Field)

Comments

<none>

Configuration Package File

Filename: GEN1579A 174023M.pac
Path: H:\02-Way\up08233-(PhaseIII)\GCP Programs\PHASE 3\M.P. 15.79\
Date/Time: 7/23/2009 15:21:44

NEW SHEET
ELMHURST, ILLINOIS
COTTAGE HILL AVENUE
M.P. 15.79
GENEVA SUBDIVISION
D.O.T.#174 023M

1	07-23-09
INSTALL HALF BLOCK SYSTEM FROM VILLA PARK TO PARK, ILLINOIS. PHASE 3 PART 3 (MP. 18.24 TO MP. 15.50) AFE #89951	DLD
	/ /CTC/MDF

NOTE: Actual OFFSET and ISLAND distances must be verified by field personnel.

UNION PACIFIC
QUALITY PRODUCTIVITY SAFETY
SIGNAL DESIGN

DES:	CTC
DIG:	CTC
CHK:	DLD
A.F.E.	89951
ID= GEN1579.3AX	

UNION PACIFIC RAILROAD
CHICAGO, ILLINOIS TO
CLINTON, IOWA
C.T.C. CIRCUITS
Office of Sr AVP Engineering - Signal/TCO Omaha, Nebraska

DATE	07-23-09
SHEET	3A
DWG	15.79
	GEN