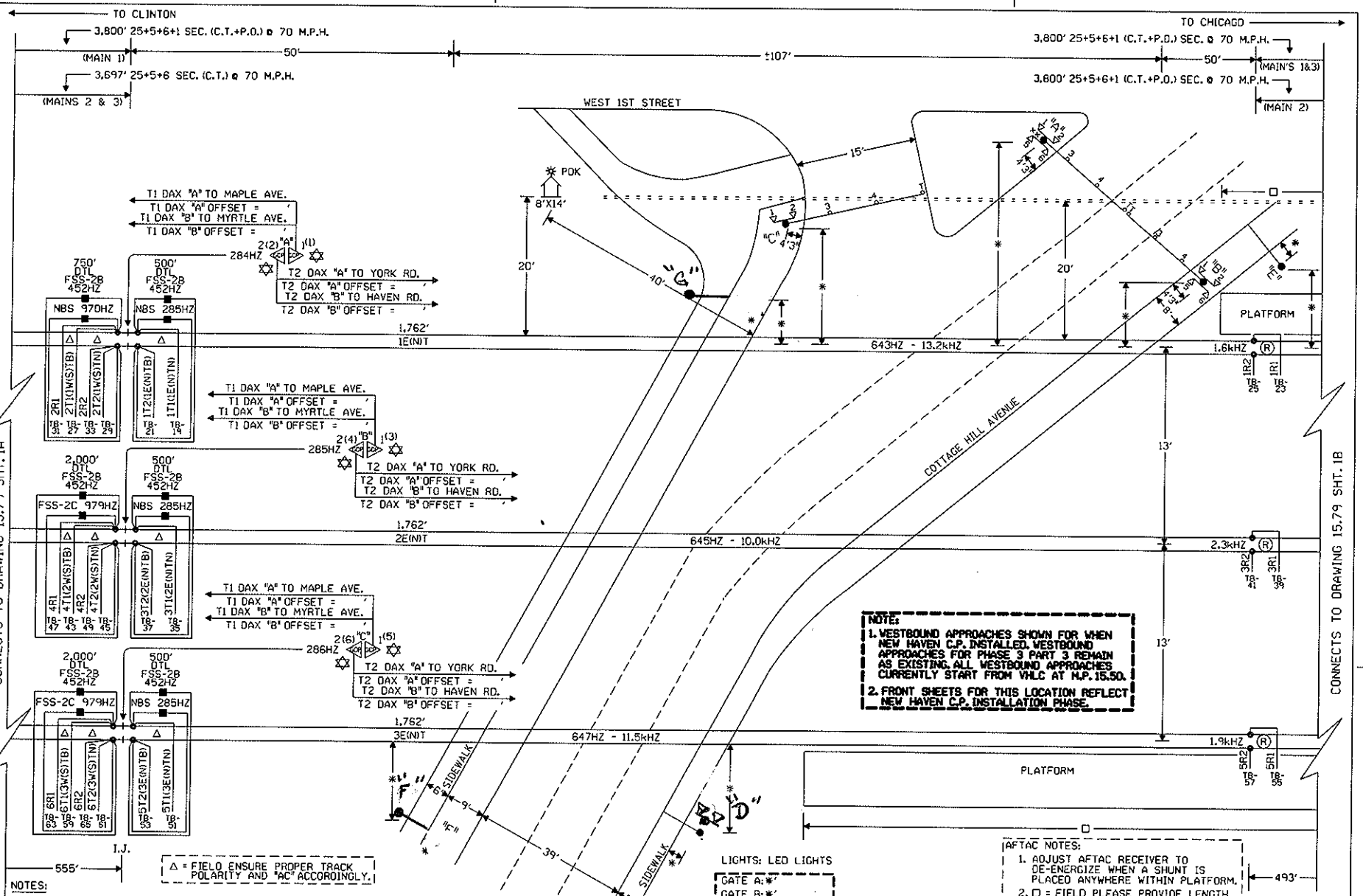

NOTE:

1. WESTBOUND APPROACHES SHOWN FOR WHEN NEW HAVEN C.P. INSTALLED. WESTBOUND APPROACHES FOR PHASE 3 PART 3 REMAIN AS EXISTING. ALL WESTBOUND APPROACHES CURRENTLY START FROM VHLC AT M.P. 15.50.
2. FRONT SHEETS FOR THIS LOCATION REFLECT NEW HAVEN C.P. INSTALLATION PHASE.

AFTAC NOTES:

1. ADJUST AFTAC RECEIVER TO DE-ENERGIZE WHEN A SHUNT IS PLACED ANYWHERE WITHIN PLATFORM.
2. □ = FIELD PLEASE PROVIDE LENGTH OF AFTAC TRACK CIRCUIT.

NOTES:

⊗ = TWISTED WIRES INSULATED 1 TWIST PER FT. ALL TRACK WIRES 2C. #6

TRANSMITTER AND RECEIVER LEADS TO BE SEPARATED BY AT LEAST 12" IN TRENCH. LENGTHS SHOULD NOT EXCEED MANUFACTURER'S RECOMMENDATION.

TOP OF FOUNDATION TO BE AT SAME ELEVATION AS THE SURFACE OF THE TRAVELED WAY & NO MORE THAN 4" ABOVE THE SURFACE OF THE GROUND.

ALL BUNGALOW WIRING TO BE #16 AWG FLEX UNLESS OTHERWISE SPECIFIED EXCEPT ALL GROUND WIRE TO BE #6 AWG FLEX OR LARGER.

ALL WIRING IN GATE MECHANISM TO BE #10 "AWG FLEX".

REFER TO UP STANDARD DWG FOR BUNGALOW GROUNDING.

PORTABLE GENERATOR EXTENSION CORD FOR 240V TO 240V IS PROVIDED AS WELL AS A 120V TO 240V ADAPTER.

ALL LIGHTS TO BE 12" ROUNDELS.

= = = = = = 4" X 130' CONDUIT

LIGHTS: LED LIGHTS

GATE A:*'
GATE B:*'
GATE C:*'
GATE D:*'
GATE E:*'
GATE F:*'
GATE G:*'
CRTU = MICROBURST

← EXISTING

xx = BELL

✡ = GCP TO OPERATE IN SEMI-BI DIRECTIONAL MODE. USE TAB 627 COUPLER.

CONSTRUCTION NOTES:

1. REUSE EXISTING GATES "A","B","C","D","E","F" & "G".
2. ORDER AND INSTALL (1)-INTERCONNECTION BOX (TAB 199) FOR NEW 8'X14' CROSSING HOUSE.
3. REUSE EXISTING CRTU AND ANTENNA FROM EXISTING WEST STREET XING HOUSE - M.P. 15.79.
4. FIELD TO REPLACE EXISTING LAMPS WITH LED LIGHTS.
5. * = FIELD PROVIDE MEASUREMENT.

W(S) ◄——○——► E(N)

NEW SHEET
ELMHURST, ILLINOIS
COTTAGE HILL AVENUE
M.P. 15.79
GENEVA SUBDIVISION
D.O.T.#174 023M

1	07-23-09	INSTALL HALF BLOCK SYSTEM FROM VILLA PARK TO PARK, ILLINOIS. PHASE 3 PART 3 (MP. 18.24 TO MP. 15.50) AFE #89951	DLD /CTC/MDF

MODIFICATION LEVEL	
O. A. LAST LEVEL CHECKED	00
LAST LEVEL MOD THIS TYPICAL	00
LAST LEVEL BY DESIGNER	00
CHANGED FROM TYPICAL?	Y

rev 02.01.08 ...4K ZTKUSTYP.1

UNION PACIFIC — QUALITY PRODUCTIVITY SAFETY — SIGNAL DESIGN

DES:	CTC
DIG:	CTC
CHK:	DLD
A.F.E.	89951
ID:	GENI579.1X

UNION PACIFIC RAILROAD

CHICAGO, ILLINOIS TO CLINTON, IOWA
C.T.C. CIRCUITS

Office of Sr. AVP Engineering - Signal/TCO Omaha, Nebraska

DATE	07-23-09
SHEET	1
DWG	15.79
	GEN

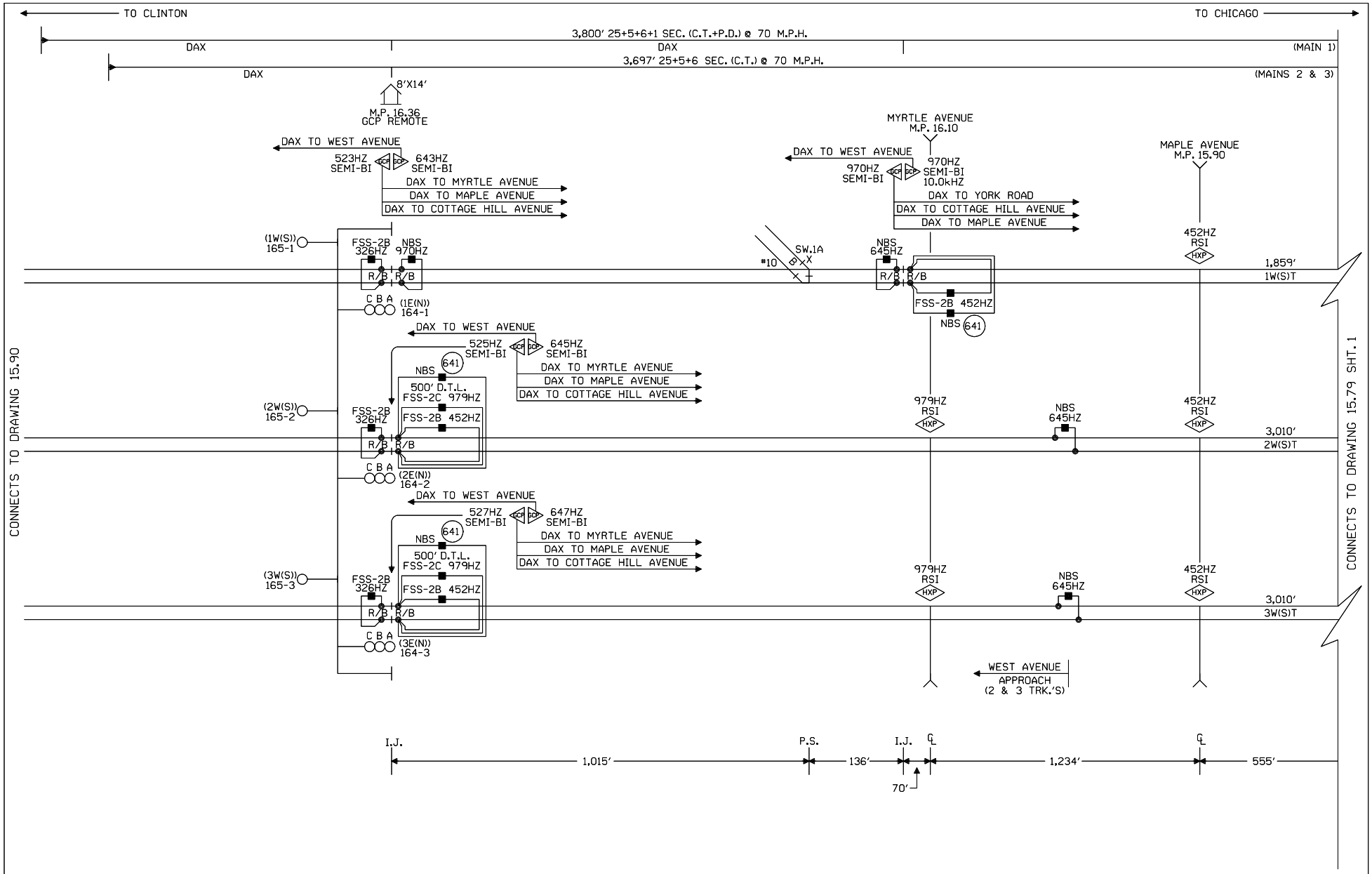

NEW SHEET

ELMHURST, ILLINOIS
COTTAGE HILL AVENUE
M.P. 15.79
GENEVA SUBDIVISION
D.O.T.#174 023M

1 07-23-09 INSTALL HALF BLOCK SYSTEM FROM VILLA PARK TO PARK, ILLINOIS. PHASE 3 PART 3 (MP. 18.24 TO MP. 15.50) AFE #89951 DLD / /CTC/MDF	MODIFICATION LEVEL		UNION PACIFIC QUALITY PRODUCTIVITY SAFETY SIGNAL DESIGN	DES: CTC
	Q. A. LAST LEVEL CHECKED	DQ		DIG: CTC
	LAST LEVEL MOD THIS TYPICAL	DQ		CHK: DLD
	LAST LEVEL BY DESIGNER	DQ		A.F.E. 89951
	CHANGED FROM TYPICAL?	Y		ID= GEN1579.1AX
	MEY 02.01.08 4K 1TKBG.1			

UNION PACIFIC RAILROAD

CHICAGO, ILLINOIS TO
CLINTON, IOWA
C.T.C. CIRCUITS

Office of Sr AVP Engineering - Signal/TCO Omaha, Nebraska

DATE	07-23-09
SHEET	1A
DWG	15.79
	GEN

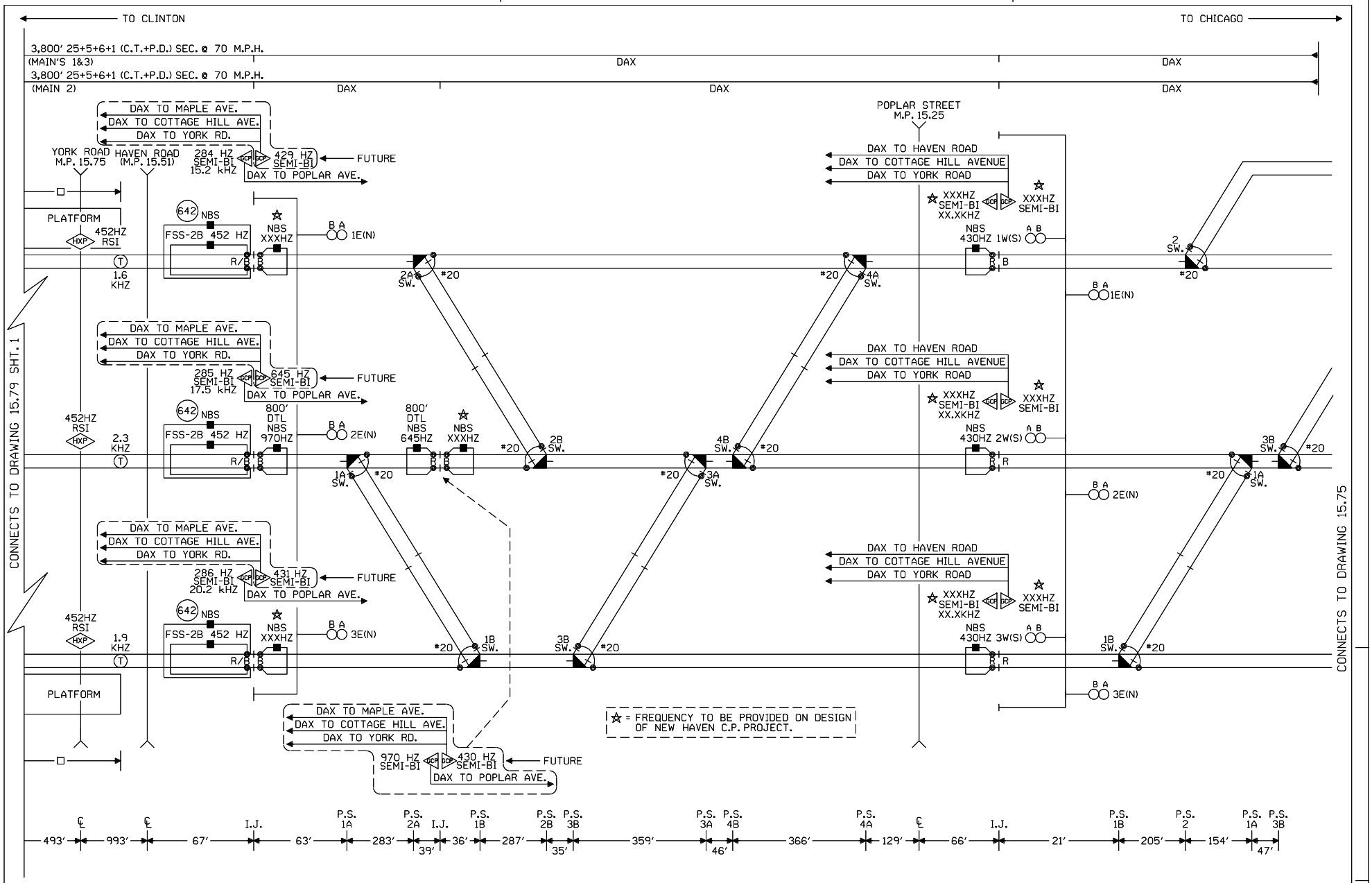

NEW SHEET

ELMHURST, ILLINOIS
COTTAGE HILL AVENUE
M.P. 15.79
GENEVA SUBDIVISION
D.O.T.#174 023M

					1 07-23-09 INSTALL HALF BLOCK SYSTEM FROM VILLA PARK TO PARK, ILLINOIS. PHASE 3 PART 3 (MP. 18.24 TO MP. 15.50) AFE #89951 DLD / /CTC/MDF	MODIFICATION LEVEL		UNION PACIFIC QUALITY PRODUCTIVITY SAFETY SIGNAL DESIGN	DES: CTC	UNION PACIFIC RAILROAD	DATE 07-23-09
						Q. A. LAST LEVEL CHECKED	DQ		DIG: CTC	CHICAGO, ILLINOIS TO CLINTON, IOWA	SHEET 1B
						LAST LEVEL MOD THIS TYPICAL	DQ		CHK: DLD	C.T.C. CIRCUITS	DWG 15.79
						LAST LEVEL BY DESIGNER	DQ		A.F.E. 89951		GEN
						CHANGED FROM TYPICAL?	Y		ID= GEN1579.1BX	Office of Sr AVP Engineering - Signal/TCO Omaha, Nebraska	
						MEY 02.01.08 4K 2TKUGTYP.1					

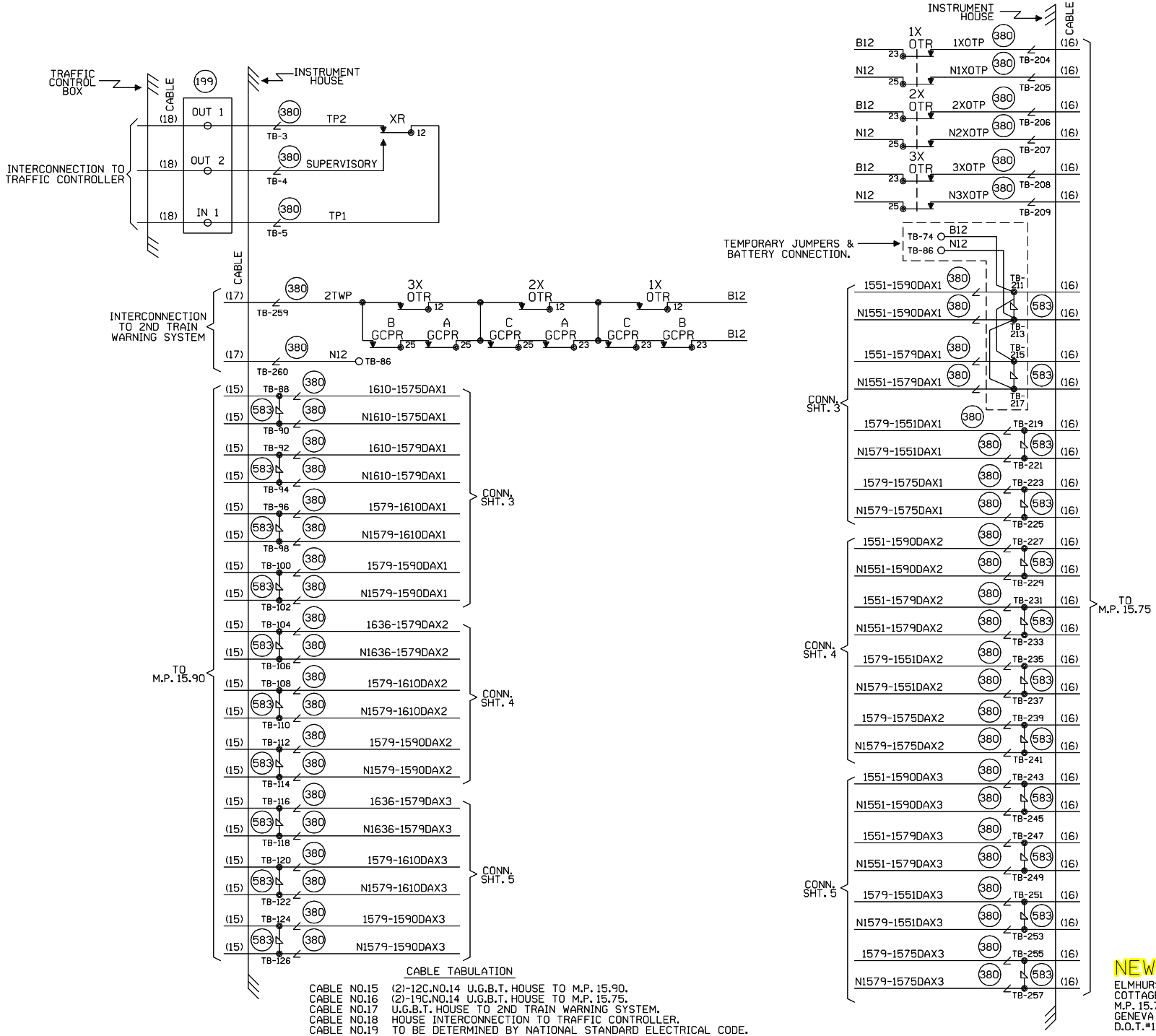

CABLE TABULATION

CABLE NO.15 (2)-12C.NO.14 U.G.B.T. HOUSE TO M.P. 15.90.
CABLE NO.16 (2)-19C.NO.14 U.G.B.T. HOUSE TO M.P. 15.75.
CABLE NO.17 U.G.B.T. HOUSE TO 2ND TRAIN WARNING SYSTEM.
CABLE NO.18 HOUSE INTERCONNECTION TO TRAFFIC CONTROLLER.
CABLE NO.19 TO BE DETERMINED BY NATIONAL STANDARD ELECTRICAL CODE.

NEW SHEET
ELMHURST, ILLINOIS
COTTAGE HILL AVENUE
M.P. 15.79
GENEVA SUBDIVISION
D.O.T.#174 023M

1	07-23-09	INSTALL HALF BLOCK SYSTEM FROM VILLA PARK TO PARK, ILLINOIS. PHASE 3 PART 3 (MP. 18.24 TO MP. 15.50) AFE #89951 DLD / /CTC/MDF

UNION PACIFIC
QUALITY PRODUCTIVITY SAFETY
SIGNAL DESIGN

DES:	CTC
DIG:	CTC
CHK:	DLD
A.F.E.	89951
ID= GEN1579.1CX	

UNION PACIFIC RAILROAD

CHICAGO, ILLINOIS TO
CLINTON, IOWA
C.T.C. CIRCUITS

Office of Sr AVP Engineering - Signal/TCO Omaha, Nebraska

DATE	07-23-09
SHEET	1C
DWG	15.79
	GEN

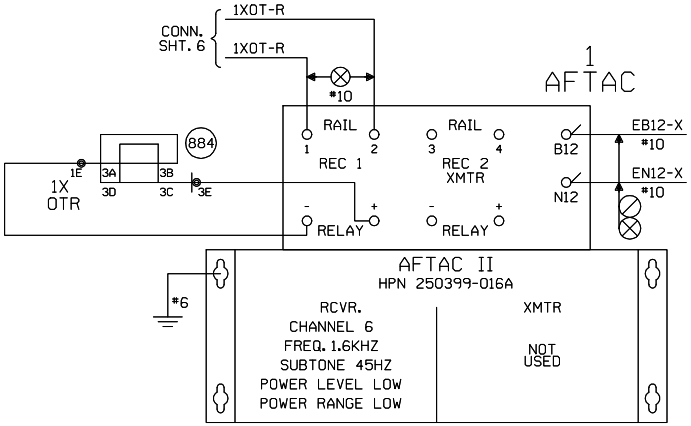

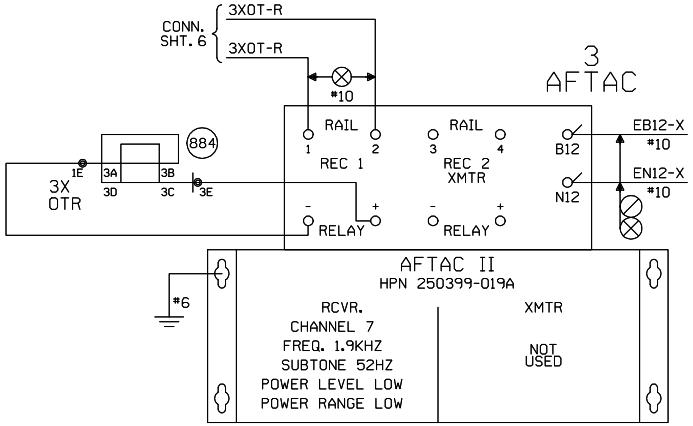

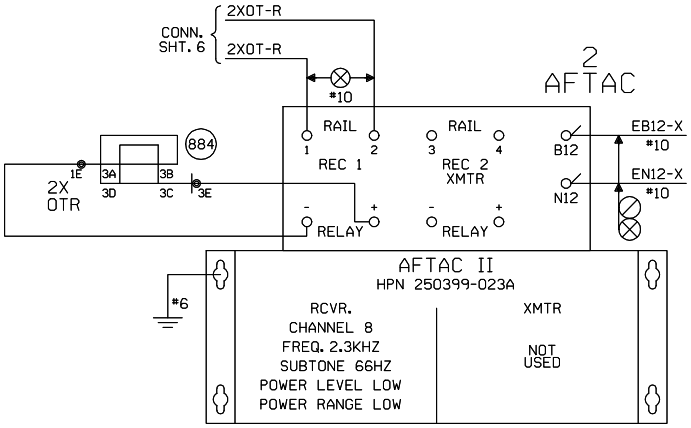

NEW SHEET

ELMHURST, ILLINOIS
COTTAGE HILL AVENUE
M.P. 15.79
GENEVA SUBDIVISION
D.O.T.#174 023M

1	07-23-09
INSTALL HALF BLOCK SYSTEM FROM VILLA PARK TO PARK, ILLINOIS. PHASE 3 PART 3 (MP. 18.24 TO MP. 15.50) AFE #89951	
	DLD
/	/CTC/MDF

UNION PACIFIC
QUALITY PRODUCTIVITY SAFETY
SIGNAL DESIGN

DES:	CTC
DIG:	CTC
CHK:	DLD
A.F.E.	89951
ID= GEN1579.1DX	

UNION PACIFIC RAILROAD

CHICAGO, ILLINOIS TO
CLINTON, IOWA
C.T.C. CIRCUITS

Office of Sr AVP Engineering - Signal/TCO Omaha, Nebraska

DATE	07-23-09
SHEET	1D
DWG	15.79
	GEN