24

2,200'± APPROACH PROVIDES A MAXIMUM OF 33 SEC WARNING TIME AT 40 MPH

KCSR TO MEASURE CLEARANCE DISTANCE AND ADD CORRECT CLEARANCE TIME TO THE WARNING TIME, REFER TO CHART

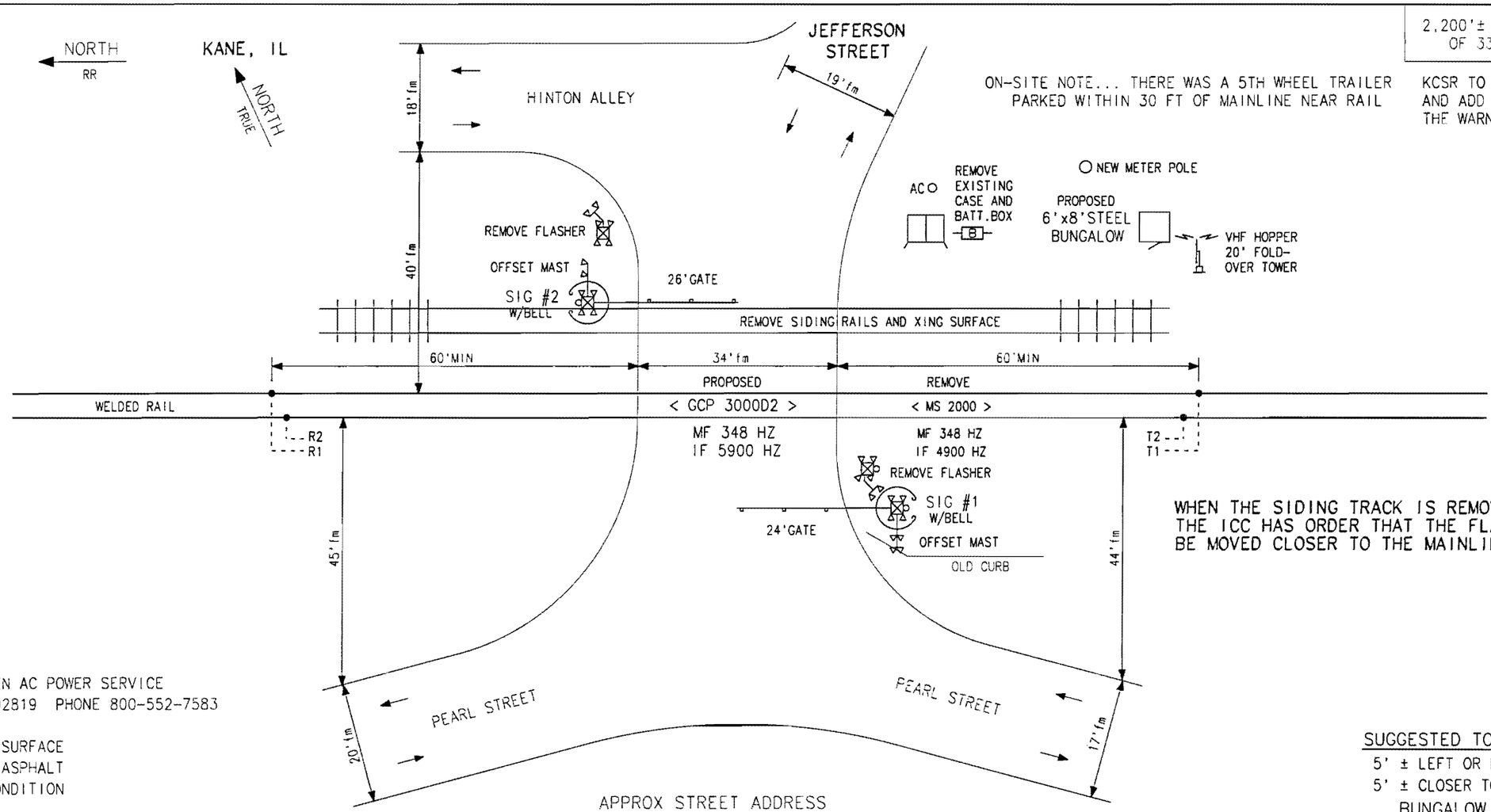

WHEN THE SIDING TRACK IS REMOVED THE ICC HAS ORDER THAT THE FLASHER BE MOVED CLOSER TO THE MAINLINE.

RECEIVED
MAY 14 2010
Illinois Commerce Commission
RAIL SAFETY SECTION

EXISTING AMEREN AC POWER SERVICE
METER NO. 51602819 PHONE 800-552-7583

EXISTING XING SURFACE
34'TIMBER & ASPHALT
IN POOR CONDITION

MAXIMUM SPEED REGULATIONS
MP 056.0 TO MP 028.0 ...40 MPH

KCSR PROPERTY – 100' FROM CENTERLINE IN ALL QUADRANTS

APPROX STREET ADDRESS

400 JEFFERSON STREET

CONSTRUCTION SUPERVISOR OR SIGNAL SUPERVISOR TO FILL OUT PIPE OR CONDUIT LOCATION CHART PROVIDED BELOW. PLEASE LABLE PIPES BY AN ALPHA DESIGNATION (EXAMPLE 4" PVC PIPE A)

UG SIGNAL CABLE PIPE LOCATION	DESTINATION QUADRANT			BUNGALOW QUADRANT		
	TO ROAD	TO RAIL	DEPTH	TO ROAD	TO RAIL	DEPTH
4" PVC PIPE A						
4" PVC PIPE B						
4" PVC PIPE C						
4" PVC PIPE D						

ALL DIMENSIONS MEASURED PERPENDICULAR TO ROAD OR PERPENDICULAR TO RAIL

SIG #1 LOCATION:

8'-3" MIN FROM THE EDGE OF PAVED ROAD, MEASURED PERPENDICULAR TO ROAD FROM CENTER OF SIGNAL POLE TO THE EDGE OF PAVED ROAD

15'-0"± FROM NEAR RAIL AT GATE BASE, MEASURED PERPENDICULAR TO RAIL FROM CENTER OF SIGNAL POLE TO THE NEAREST EDGE OF RAIL

MUTCD MINIMUM RESTRICTIONS:
8'-3" MIN. FROM EDGE OF TRAVELED ROAD
12'-0" MIN. FROM CENTERLINE OF RAIL
GATE ARM TO BE PARALLEL TO THE RAIL

SIG #2 LOCATION:

8'-3" MIN FROM THE EDGE OF PAVED ROAD, MEASURED PERPENDICULAR TO ROAD FROM CENTER OF SIGNAL POLE TO THE EDGE OF PAVED ROAD

15'-0"± FROM NEAR RAIL AT GATE BASE, MEASURED PERPENDICULAR TO RAIL FROM CENTER OF SIGNAL POLE TO THE NEAREST EDGE OF RAIL

MUTCD MINIMUM RESTRICTIONS:
8'-3" MIN. FROM EDGE OF TRAVELED ROAD
12'-0" MIN. FROM CENTERLINE OF RAIL
GATE ARM TO BE PARALLEL TO THE RAIL

SUGGESTED TOWER LOCATION:

5' ± LEFT OR RIGHT OF THE BUNGALOW
5' ± CLOSER TO TRACK THAN BUNGALOW

BUNGALOW LOCATION:

50'-0"± FROM THE EDGE OF PAVED ROAD, MEASURED ALONG THE NEAR RAIL FROM NEAREST SIDE OF BUNGALOW TO EDGE OF THE PAVED ROAD

25'-0"± FROM THE NEAR RAIL, MEASURED PERPENDICULAR TO RAIL FROM NEAREST SIDE OF BUNGALOW TO THE NEAREST EDGE OF RAIL

MUTCD SUGGESTED CLEARANCE:
30'-0"± FROM THE EDGE OF HIGHWAY
25'-0"± FROM THE NEAREST RAIL

KANSAS CITY SOUTHERN LINES SIGNAL DEPT.

DWG. NO. SD-33-2-046.99A

LOCATION JEFFERSON STREET
KANE, IL

FILE SD-33-5-046.99
DOT NO. 294-579K
MILE POST 046.99

REVISION BLOCK	FLASHERS IN SERVICE	FLSHRS & GATES IN SERVICE		ORANGE=OUT BLUE = IN GREEN=NOTE	ASSET #982688

NORTH
RR

KANE, IL

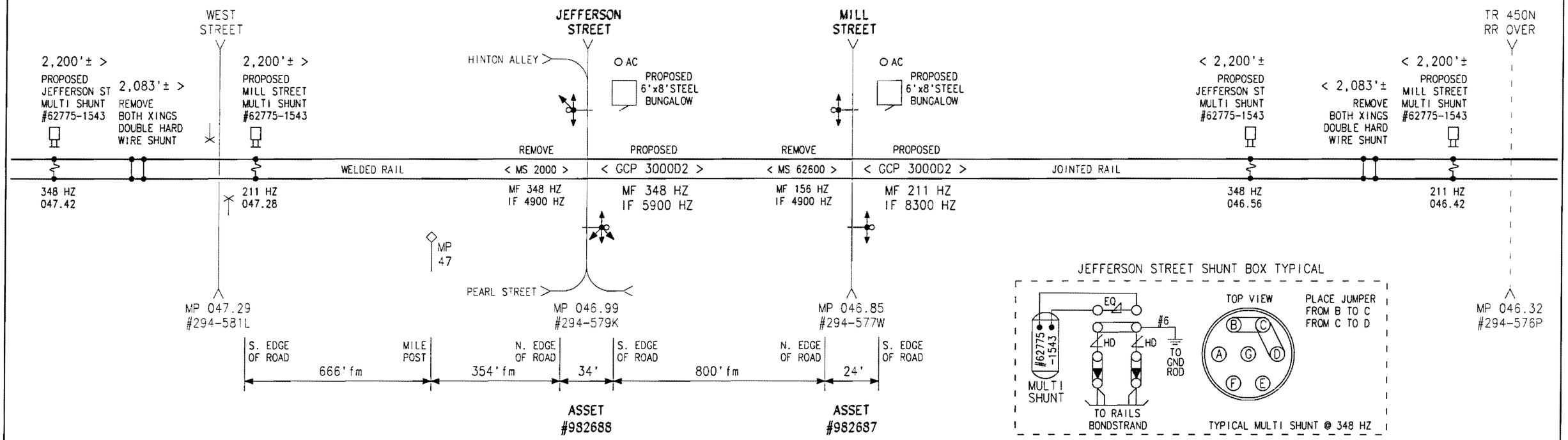

JEFFERSON STREET SHUNT BOX TYPICAL

SHUNT BOX MOUNTED 9 FT FROM NEAR RAIL
G&B SPECIALTIES PART #500400-100-03

REFERENCE GCP 3000 APPLICATIONS GUIDELINES
OR THE KCSR FIELD PRINT TYPICAL BOOK,
TABLE 12-6 FREQUENCY SELECTION JUMPERS
TABLE 12-9 INDUCTOR #8V617 CONNECTION

PARALLEL GRAVEL ROAD BETWEEN WEST ST & JEFFERSON ST DOES NOT COMPLETELY CONNECT BOTH STREETS, IS ONE CAR WIDE AND SOME OF IT IS ON RAILROAD R/W.

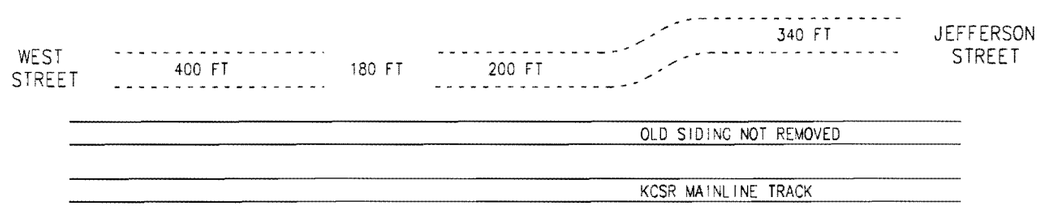

SET MATERIAL CONTAINER AND THE BUNGALOW
BE SURE TO MAINTAIN GOOD SITE DISTANCES.
NW QUADRANT AT JEFFERSON ST
'± FROM NEAREST EDGE OF ROAD
'± FROM NEAREST EDGE OF RAIL

FOR DIRECTIONS OR EXACT PLACEMENT:
CONTACT MIKE VAN TIEM (KCSR PROJECT ENGR)
OFFICE 318-676-6269, CELL 318-218-7207
OR STEVE JONES (KCSR PROJECT MANAGER)
OFFICE 318-676-6264, CELL 318-347-3210

REVISION BLOCK

KANSAS CITY SOUTHERN LINES SIGNAL DEPT.

DWG. NO. SD-33-2-046.99B

LOCATION JEFFERSON STREET
KANE, IL

FILE SD-33-5-046.99
DOT NO. 294-579K
MILE POST 046.99

INSTALLATION AND DESIGN INFORMATION

APPROACH AND WARNING TIME CALCULATIONS	GCP-T1 MAIN TRK	GCP-T1 MAIN TRK	OTHER TRK	OTHER TRK
MINIMUM WARNING TIME PLUS CLEARANCE TIME PLUS BUFFER TIME TOTAL WARNING TIME	20 SEC 0 SEC 10 SEC 30 SEC	20 SEC 0 SEC 10 SEC 30 SEC		
TOTAL WARNING TIME PLUS EQUIP RESPONSE PLUS ADVANCE PREEMPT TOTAL APPROACH TIME	30 SEC 5 SEC 0 SEC 35 SEC	30 SEC 5 SEC 0 SEC 35 SEC	ILLINOIS REQUIRES A MINIMUM OF 30 SECS. WARNING TIME FOR GATED CROSSINGS.	
MAX. TRAIN SPEED EQUATION FEET/SECOND SPEED FEET PER SECOND	60 MPH x 1.4667 88.0 FPS	40 MPH x 1.4667 58.7 FPS		
TOTAL APPROACH TIME SPEED FEET PER SECOND APPROACH DISTANCE (MESURED FROM TIE-IN POINTS)	35 SEC x 88.0 3,080'	35 SEC x 58.7 2,055'		
DISTANCE ROUNDED UP TO	3,200'±	2,200'±		

CLEARANCE DISTANCE FOR DESIGN PURPOSE WAS ESTIMATED TO BE 33'±
THIS DISTANCE SHOULD BE MEASURED EXACTLY AS PART OF THE INSTALLATION PROCESS, PER DIRECTIONS SHOWN IN CHART

PLEASE MEASURE EXACT CLEARANCE DISTANCE AS FOLLOWS:

MEASURE ALONG THE EDGE OF ROAD - FROM GATE ARM DOWN TO 6' MIN. BEYOND THE FARTHEST RAIL (6'IS MEASURED PERPENDICULAR TO RAIL)

MEASURE AT CENTER LINE OF ROAD - FROM GATE ARM DOWN TO 6' MIN. BEYOND THE FARTHEST RAIL (6'IS MEASURED PERPENDICULAR TO RAIL)

USE THE LONGEST DISTANCE MEASURED ABOVE TO DETERMINE CLEARANCE TIME IF OVER 35' MIN., AS PER THE CHART BELOW

ADD THE LONGEST CLEARANCE TIME TO THE WARNING TIME

CLEARANCE DISTANCE MEASUREMENTS

SIG #1 = AT EDGE OF ROAD ____ FT	SIG #1 = CENTER OF ROAD ____ FT	SIG #1 = LONGEST DISTANCE ____ FT	SIG #1 = CLEARANCE TIME = CT ____ SEC
SIG #2 = AT EDGE OF ROAD ____ FT	SIG #2 = CENTER OF ROAD ____ FT	SIG #2 = LONGEST DISTANCE ____ FT	SIG #2 = CLEARANCE TIME = CT ____ SEC

CT= CLEARANCE TIME		
	0' TO 35' = NONE	96' TO 105'= 7 SEC CT
	36' TO 45' = 1 SEC CT	106' TO 115'= 8 SEC CT
	46' TO 55' = 2 SEC CT	116' TO 125'= 9 SEC CT
	56' TO 65' = 3 SEC CT	126' TO 135'= 10 SEC CT
	66' TO 75' = 4 SEC CT	136' TO 145'= 11 SEC CT
	76' TO 85' = 5 SEC CT	146' TO 155'= 12 SEC CT
	86' TO 95' = 6 SEC CT	156' TO 165'= 13 SEC CT

PROJECT NOTES:

1.) PROPOSED TO INSTALL THE FOLLOWING AS PART OF THIS STATE PROJECT:
   - 2 EA. FLASHER & GATE SIGNALS WITH 12" LED LIGHTS
   - 1 EA. 6'x 8' STEEL BUNGALOW WITH A CONSTANT WARNING TIME TRAIN DETECTION DEVICE WITH EVENT RECORDING AND REPORTING SYSTEM
   - 2 EA. 2/3RDS CIRCULAR GUARD RAILS WITH END TERMINAL CURLS
   - 2 EA. SHUNT BOX ASSEMBLIES WITH MULTI SHUNTS
   - 1 EA. 20' FOLD-OVER TOWER WITH ANTENNAS MOUNTED ON TOP
   - 1 EA. 220 VAC METER POLE
2.) 4" PVC CONDUIT FOR SIGNAL CABLING UNDER ROADWAY MAY BE INSTALLED BY DIRECTIONAL BORING METHOD
3.) APPROX 150 TONS OF FILL MATERIAL REQUIRED FOR BUNGALOW & SIGNALS
4.) ANY UTILITIES THAT INTERFERE WITH PROPER SIGNAL PLACEMENT WILL BE RELOCATED AT PROJECT EXPENSE
5.) ANY POWER LINES IN AREA WILL NEED TO BE AT LEAST 10'FROM TIP OF GATE ARM IN RAISED POSITION (VERTICAL)
6.) ANY DRAINAGE WORK REQUIRED FOR THE PROPER SIGNAL OR BUNGALOW PLACEMENT WILL BE AT PROJECT EXPENSE
7.) ALL PROPOSED DIMENSIONS ARE PLUS OR MINUS AT THE DISCRETION OF THE KCS SIGNAL SUPERVISOR AND/OR THE KCS PROJECT ENGINEER, IF WITHIN THE STATE GUIDELINES

MUTCD MINIMUM RESTRICTIONS FOR LOCATION AND CLEARANCE DIMENSIONS FOR FLASHER & GATE SIGNALS SHALL BE:

WHEN THERE IS A CURB...
A HORIZONTAL CLEARANCE OF AT LEAST 2'-0" SHALL BE PROVIDED FROM THE FACE OF THE VERTICAL CURB TO THE CLOSEST PART OF THE SIGNAL OR GATE ARM IN ITS UPRIGHT POSITION.

WHEN THERE IS A SHOULDER, BUT NO CURB...
A HORIZONTAL CLEARANCE OF AT LEAST 2'-0" FROM THE EDGE OF A PAVED OR SURFACED SHOULDER SHALL BE PROVIDED, WITH A CLEARANCE OF AT LEAST 6'-0" FROM THE EDGE OF THE TRAVELED WAY.

WHEN THERE IS NO CURB OR SHOULDER...
THE MINIMUM HORIZONTAL CLEARANCE SHALL BE 6'-0" FROM THE EDGE OF THE TRAVELED WAY.

MUTCD SUGGESTED LATERAL CLEARANCE FOR EQUIPMENT HOUSING (CONTROLLER CABINETS):

EQUIPMENT HOUSING SHOULD HAVE A LATERAL CLEARANCE OF AT LEAST 30'-0" FROM THE EDGE OF THE HIGHWAY AND WHERE RAILROAD PROPERTY AND CONDITIONS ALLOW, AT LEAST 25'-0" FROM THE NEAREST RAIL.

TOWNSHIP ROAD COMMISSIONER:
MR. DEAN DAVENPORT
217-371-8685

MAYOR OF KANE:
MR. JASON SHAW

CITY CLERK:
MS. SYLVIA KALLAL

STATES IDENTIFICATION...
ILLINOIS COMMERCE COMMISSION
GCPF FY 2009-2013 5YR PLAN
ROAD: MILL STREET (CH17/CH6)
DOT NO. 294-577W
RR MP 46.85 AG
GREENE COUNTY

STATE PROJECT MANAGER:
MR. DAVID MARTH P.E.
GREENE COUNTY ENGINEER
GREENE COUNTY HIGHWAY DEPT.
R.R. 1, BOX 15
CARROLLTON, IL 62016
OFFICE: 217-942-6941
2 WEEKS NOTICE REQUIRED

SIGNAL FOREMAN TO CALL STATE PROJECT ENGINEER WHEN GANG SHOWS UP AT JOB SITE TO BEGIN WORK

REVISION BLOCK

KANSAS CITY SOUTHERN LINES SIGNAL DEPT.

DWG. NO. SD-33-2-046.99B1

LOCATION JEFFERSON STREET
KANE, IL

FILE SD-33-5-046.99
DOT NO. 294-579K
MILE POST 046.99

CABLE TABULATIONS

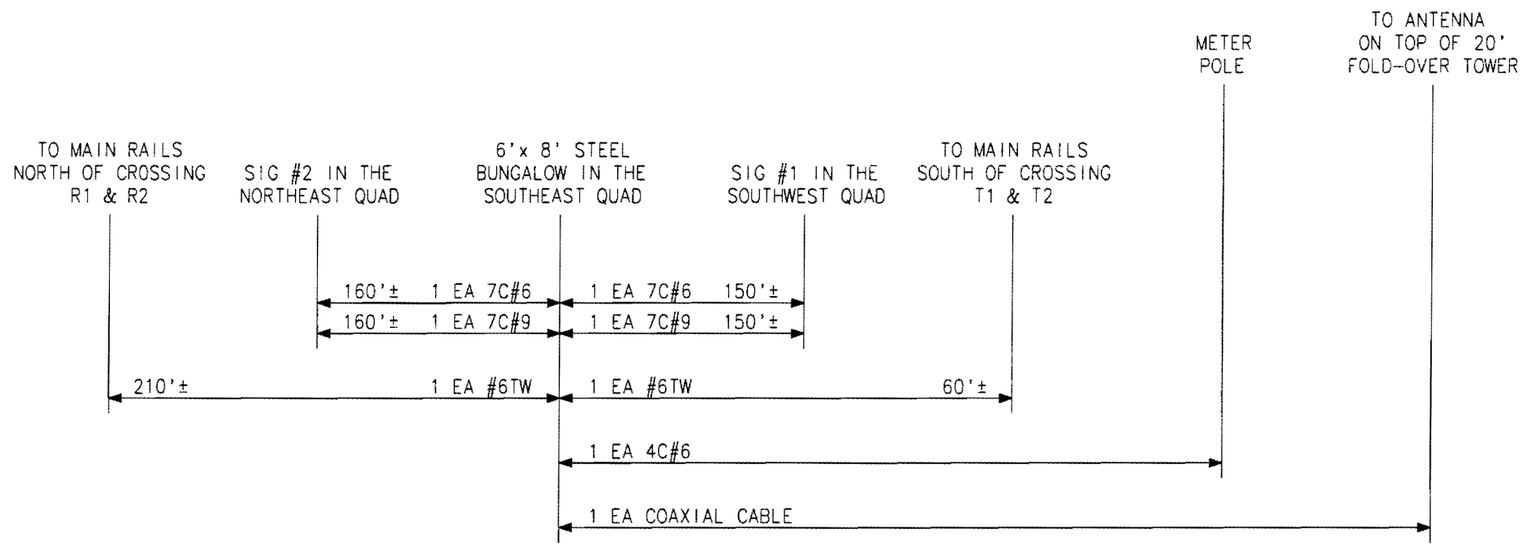

UG WIRE TOTALS

#6TW =	270'±
7C#9 =	310'±
7C#6 =	310'±
4C#6 =	200'±

KANSAS CITY SOUTHERN LINES SIGNAL DEPT.

DWG. NO. SD-33-2-046.99C

LOCATION JEFFERSON STREET
KANE, IL

FILE SD-33-5-046.99
DOT NO. 294-579K
MILE POST 046.99

REVISION BLOCK

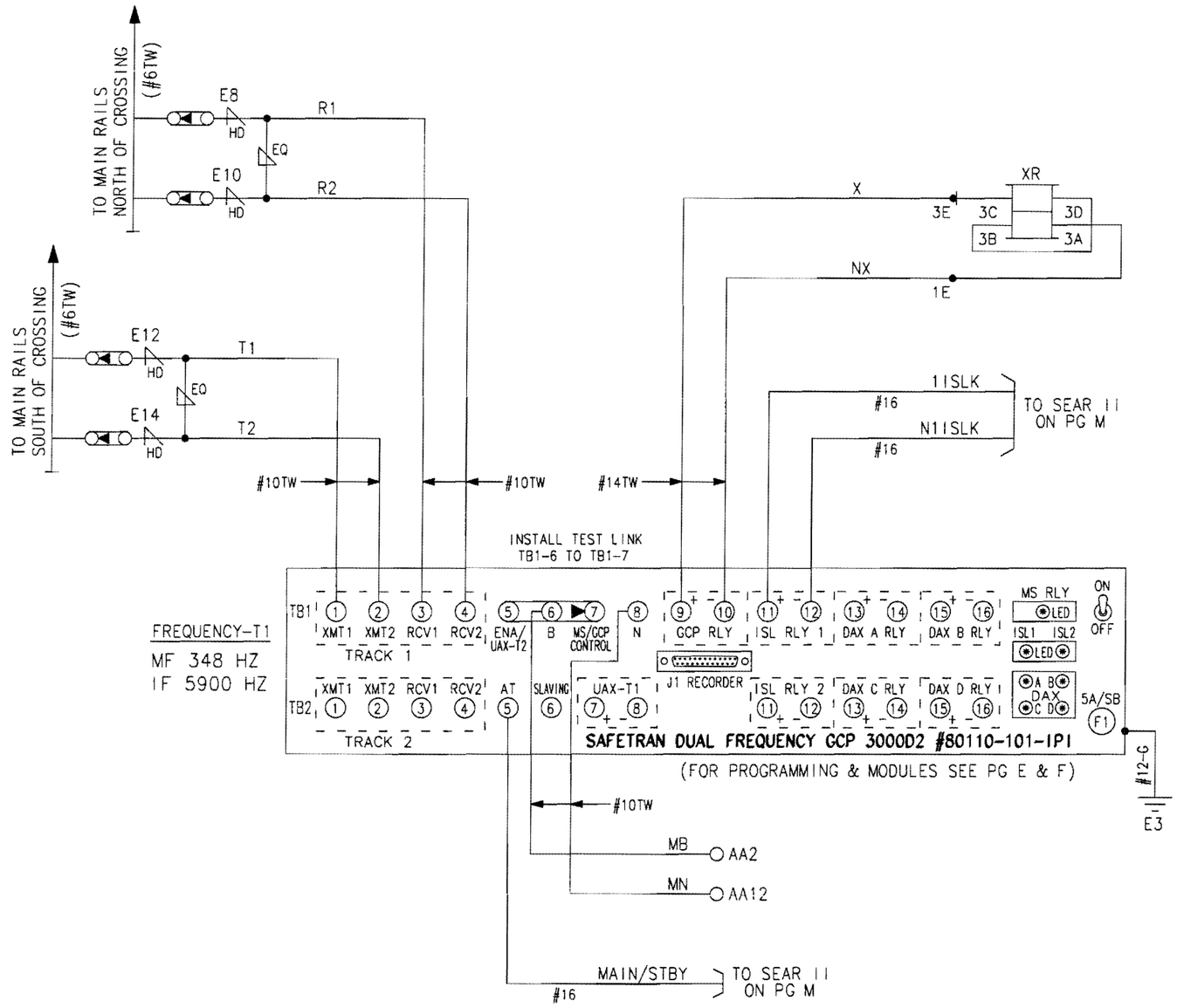

KANSAS CITY SOUTHERN LINES SIGNAL DEPT.

DWG. NO. SD-33-2-046.99D

LOCATION JEFFERSON STREET
KANE, IL

FILE SD-33-5-046.99
DOT NO. 294-579K
MILE POST 046.99

REVISION BLOCK

GCP #3000D2 / PROGRAMMING HISTORY (Press PROGRAM Key)

NUMBER OF TRACKS (NUMBER OF TRANSCEIVERS MODULES)		1 ■ 2 □
FREQUENCY (MS/GCP)	T1:	348 Hz
	T2:	N/A Hz
UNIDIRECTIONAL/BIDIRECTIONAL	T1:	UNI □ BI ■
	T2:	UNI □ BI □
XMIT LEVEL	T1:	MAX ■ MED □
	T2:	MAX □ MED □
PREDICTOR/MOTION SENSOR	T1:	PRED ■ MS □
	T2:	PRED □ MS □
WARNING TIME SELECTED	T1:	30 SEC.
	T2:	N/A SEC.
APPROACH DISTANCE SELECTED	T1:	2,200' FT.
	T2:	N/A FT.
APPROACH DISTANCE COMPUTED	T1:	SYSTEM COMPUTED FT.
	T2:	SYSTEM COMPUTED FT.
UAX1 PICKUP DELAY (0 = OFF)		0 SEC.
ENA / UAX2 DELAY (0 = OFF)		0 SEC.
ISLAND DISTANCE (BETWEEN ISLAND TRACK WIRES)	T1:	160' FT.
	T2:	N/A FT.
NUMBER OF DAX'S		0 ■ 1 □ 2 □ 3 □ 4 □
DAX A TRACK ASSIGNMENT		T1 □ T2 □
DAX A DISTANCE (0 = PREMPT)		N/A FT.
DAX A WARNING TIME		N/A SEC.
DAX B TRACK ASSIGNMENT		T1 □ T2 □
DAX B DISTANCE (0 = PREMPT)		N/A FT.
DAX B WARNING TIME		N/A SEC.
DAX C TRACK ASSIGNMENT		T1 □ T2 □
DAX C DISTANCE (0 = PREMPT)		N/A FT.
DAX C WARNING TIME		N/A SEC.
DAX D TRACK ASSIGNMENT		T1 □ T2 □
DAX D DISTANCE (0 = PREMPT)		N/A FT.
DAX D WARNING TIME		N/A SEC.
SLAVING MASTER/SLAVE		MASTER ■ SLAVE □
PASSWORD ENABLED		DISABLED ■

GCP #3000D2 / PROGRAMMING HISTORY (Press PROGRAM Key)

RECORDER INSTALLED	NOT INSTALL ■
	INSTALLED □
RS-232-C BAUD RATE	9600 BPS
RS-232-C DATA BITS	7 □ 8 ■
RS-232-C STOP BITS	1 ■ 2 □
RS-232-C PARITY	NONE ■ MARK □
	ODD □ SPACE □
	EVEN □
DATE (E.G.,MON 16 NOV 1987)	SETUP ON INSTALL
TIME (E.G.,11:25:43 AM)	SETUP ON INSTALL
DAYLIGHT SAVINGS	ON ■ OFF □

*** MANDATORY INFORMATION ***

IF "REV.M" SOFTWARE IS INSTALLED KCS FIELD PERSONNEL TO RECORD THE CONFIGURATION CHECK NUMBER (CCN), AFTER GCP INSTALLATION, PROGRAMMING AND CALIBRATION IS COMPLETE.

CCN: _____

NUMBER MUST BE RECORDED PRIOR TO RETURNING AS INSTALLED PLANS

LOCATED ON THE #80211-IPI MODULE WITH SOFTWARE REVISION A01E APRIL, 2000

INSTALL JUMPER IN HEADER POSITION	PICKUP DELAY TIME ADDED
A & B	0 SEC
A	2 SEC
B	4 SEC
NO JUMPER (A OR B)	6 SEC

FREQUENCY SELECT HEADER

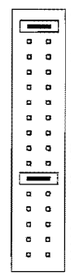

FREQ B A > JUMPER — PICKUP DELAY TIME 4 SEC

20.2
17.5
15.2
13.2
11.5
10.0
8.30
7.10
5.90 < CONNECT SHORTING BLOCK/JUMPER
4.90
4.00
3.24
2.53
2.14

GCP #3000D2 MODULE ASSEMBLIES

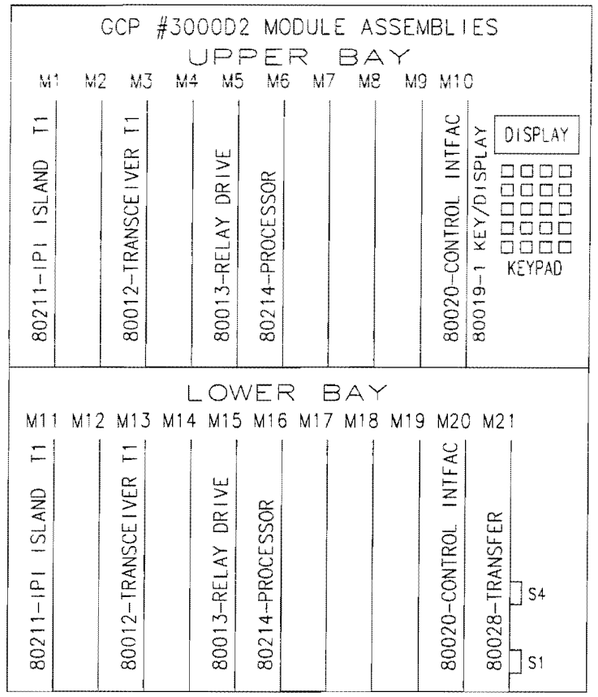

DUAL FREQUENCY GCP 3000D2 #80110-101-IPI
GCP 3000 SOFTWARE VERSION #9V121-A01M

DAX SWITCH & TRANSFER TIMER SWITCH ON TRANSFER MODULE

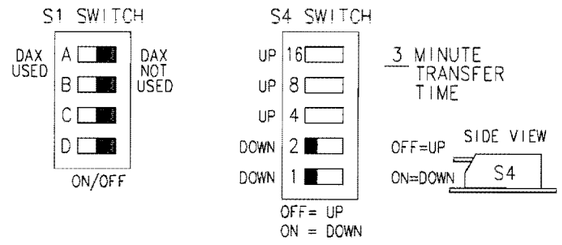

KANSAS CITY SOUTHERN LINES SIGNAL DEPT.

DWG. NO. SD-33-2-046.99E

LOCATION JEFFERSON STREET
KANE, IL

FILE SD-33-5-046.99
DOT NO. 294-579K
MILE POST 046.99

REVISION BLOCK

GCP #3000D2 / EXPANDED PROGRAMMING (Press FUNCTION Key)

SWITCH TO MS (ENTER EZ VALUE)	T1:	10	EZ
	T2:	N/A	EZ
TRANSFER DELAY MS TO GCP (0 = OFF)	T1:	0	SEC.
	T2:	N/A	SEC.
$ TRANSFER MS TO GCP PRIME (WHEN PRIME PREDICTION OFFSET IS ON)	T1:	ON ☐ OFF ☐	
	T2:	ON ☐ OFF ☐	
$ TRANSFER MS TO GCP DAX A (WHEN GCP DAX A IS ON)		T1 ☐ T2 ☐	
		ON ☐ OFF ☐	
$ TRANSFER MS TO GCP DAX B (WHEN GCP DAX B IS ON)		T1 ☐ T2 ☐	
		ON ☐ OFF ☐	
$ TRANSFER MS TO GCP DAX C (WHEN GCP DAX C IS ON)		T1 ☐ T2 ☐	
		ON ☐ OFF ☐	
$ TRANSFER MS TO GCP DAX D (WHEN GCP DAX D IS ON)		T1 ☐ T2 ☐	
		ON ☐ OFF ☐	
PRIME PREDICTION OFFSET (0 = OFF)	T1:	0	FT.
	T2:	N/A	FT.
PICKUP DELAY PRIME		25	SEC.
PICKUP DELAY DAX A		N/A	SEC.
PICKUP DELAY DAX B		N/A	SEC.
PICKUP DELAY DAX C		N/A	SEC.
PICKUP DELAY DAX D		N/A	SEC.
COMPENSATION VALUE	T1:	SYSTEM COMPUTED	
	T2:	SYSTEM COMPUTED	
^ SPEED LIMITING (DEFAULT IS ON - INDEPENDENT OF ED BELOW)	T1:	ON ■ OFF ☐	
	T2:	ON ☐ OFF ☐	
* ENHANCED DETECTION (ED) (POOR SHUNTING DETECTION)	T1:	ON ☐ OFF ■	
	T2:	ON ☐ OFF ☐	
* BACK TO BACK T1 AND T2 (WHEN ED IS ON)		NO ☐ YES ☐	
* STATION STOP TIMER (WHEN ED IS ON)	T1:	N/A	SEC.
	T2:	N/A	SEC.
NUMBER OF TRACK WIRES	T1:	4 ■ 6 ☐	
	T2:	4 ☐ 6 ☐	
* LOW EX ADJUSTMENT (0 = NORMAL)	T1:	0	
	T2:	N/A	

GCP #3000D2 / EXPANDED PROGRAMMING (Press FUNCTION Key)

# LOW EZ DETECTION	T1:	ON ☐ OFF ■	
	T2:	ON ☐ OFF ☐	
# LOW EZ DETECTION TIMER (WHEN LOW EZ DETECTION IS ON)	T1:	N/A	MIN.
	T2:	N/A	MIN.
# POSITIVE START (0 = OFF) (ENTER EZ VALUE)	T1:	0	EZ
	T2:	N/A	EZ
# POSITIVE START TIMEOUT (0 = NONE) (WHEN POSITIVE START IS ON)	T1:	N/A	MIN.
	T2:	N/A	MIN.
# SET AT OPERATION		NORMAL ■	
		DIAGNOSTIC ☐	
@! DIAGNOSTIC MESSAGES		ON ☐ OFF ■	
@! DAX MESSAGES		ON ☐ OFF ■	
! ADVANCE PREEMPT TIMER (00 = OFF)		00	SEC.
$ MOTION SENSING LEVEL (0 = NORMAL)	T1:	0	EZ
	T2:	N/A	EZ

THE FOLLOWING OPTIONS (A,B,C) ARE AVAILABLE WHEN THE ENHANCED DETECTION SCREEN IS DISPLAYED

A: ED SENSITIVITY LEVEL CAN BE REDUCED WITH ED ON.
TO REDUCE, KEY IN "NEW DATA"
THEN 1003, 1004, 1005 OR 1025.
THE LOWER THE NUMBER, THE HIGHER THE SENSITIVITY.

B: SPEED LIMITING MAY BE TURNED ON OR OFF INDEPENDENT OF ED
"^" INDICATES SPEED LIMITING IS ON DEFAULT.
TO TURN ON OR OFF, KEY IN "NEW DATA",
THEN 4000 FOR ON, OR 4001 FOR OFF.

C: PREDICTION COUNTS CAN BE CHANGED WITH ED ON.
TO INCREASE KEY IN "NEW DATA", THEN 3001, 3002 OR 3003.
3001 = A DELAY OF 0.5 SECONDS, DISPLAYED AS "ON +1"
3002 = A DELAY OF 1.0 SECONDS, DISPLAYED AS "ON +2"
3003 = A DELAY OF 1.5 SECONDS, DISPLAYED AS "ON +3"

FOLLOWING IS REQUIRED TO CONNECT GCP 3000 UNIT
TO A ECHELON NETWORK...
1 EA. 80063 ECHELON PLUG ON J1 SERIAL PORT
2 EA. 80214 PROCESSOR MODULES (E OR HIGHER)
2 EA. 80255 INTERFACE MODULES (M7/M17)

EXPANDED PROGRAMMING RESTRICTIONS...

* APPLICABLE ONLY TO GCP WITH 80044 OR 80214 PROCESSOR MODULE
# APPLICABLE ONLY TO GCP WITH 80214 PROCESSORS WITH SOFTWARE REVISION 9V121-A01C OR LATER
! APPLICABLE ONLY TO GCP WITH 80214 PROCESSORS WITH SOFTWARE REVISION 9V121-A01E OR LATER
$ APPLICABLE ONLY TO GCP WITH 80214 PROCESSORS WITH SOFTWARE REVISION 9V121-A01H OR LATER
@ APPLICABLE ONLY WHEN A SEAR NODE HAS BEEN PROGRAMMED INTO THE GCP FROM A SEAR

REVISION BLOCK

KANSAS CITY SOUTHERN LINES SIGNAL DEPT.

DWG. NO. SD-33-2-046.99F

LOCATION JEFFERSON STREET
KANE, IL

FILE SD-33-5-046.99
DOT NO. 294-579K
MILE POST 046.99

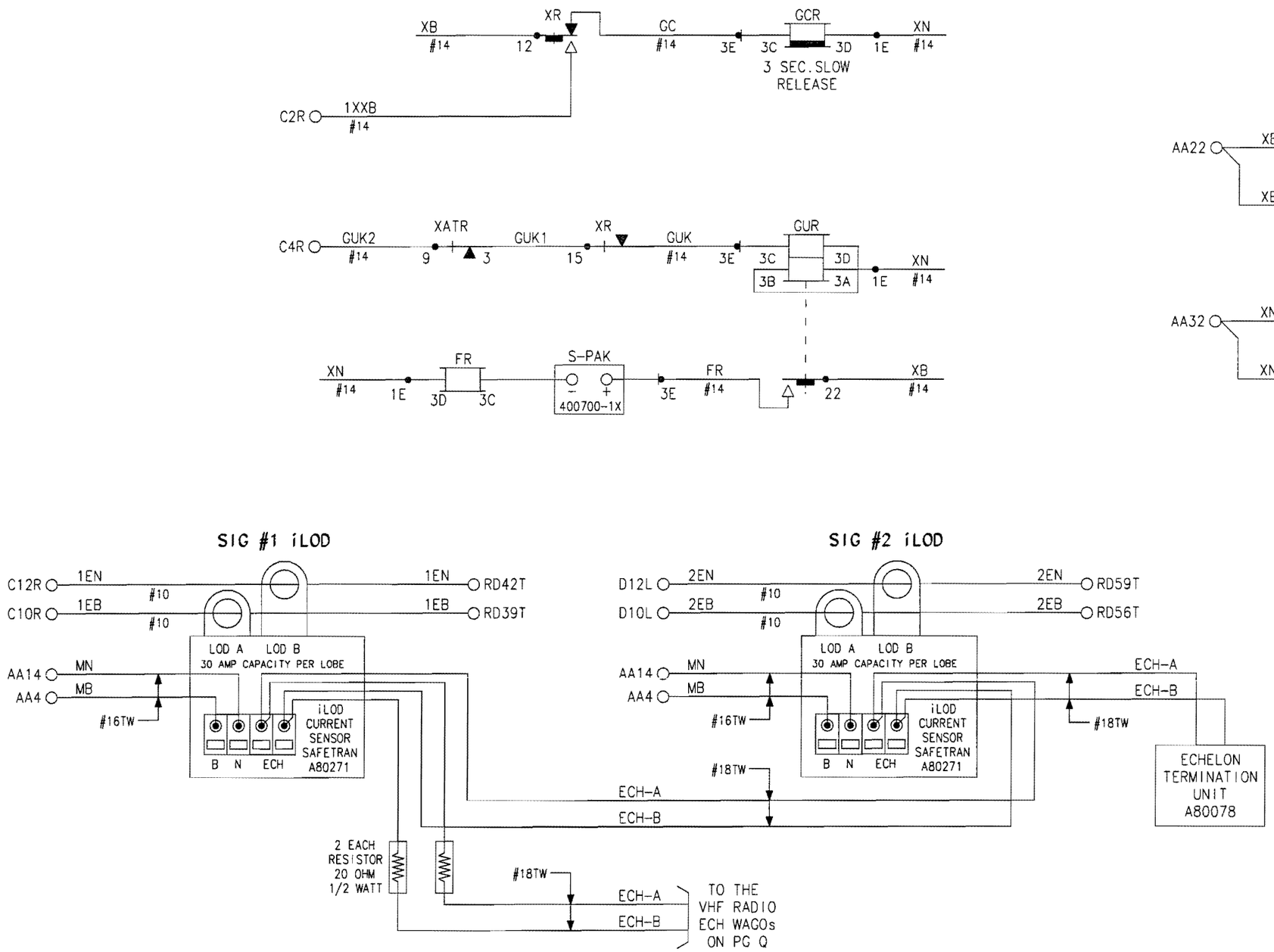

REVISION BLOCK

KANSAS CITY SOUTHERN LINES SIGNAL DEPT.

DWG. NO. SD-33-2-046.99G

LOCATION JEFFERSON STREET
KANE, IL

FILE SD-33-5-046.99
DOT NO. 294-579K
MILE POST 046.99

SIG #1 GATE CONTROL CIRCUITS

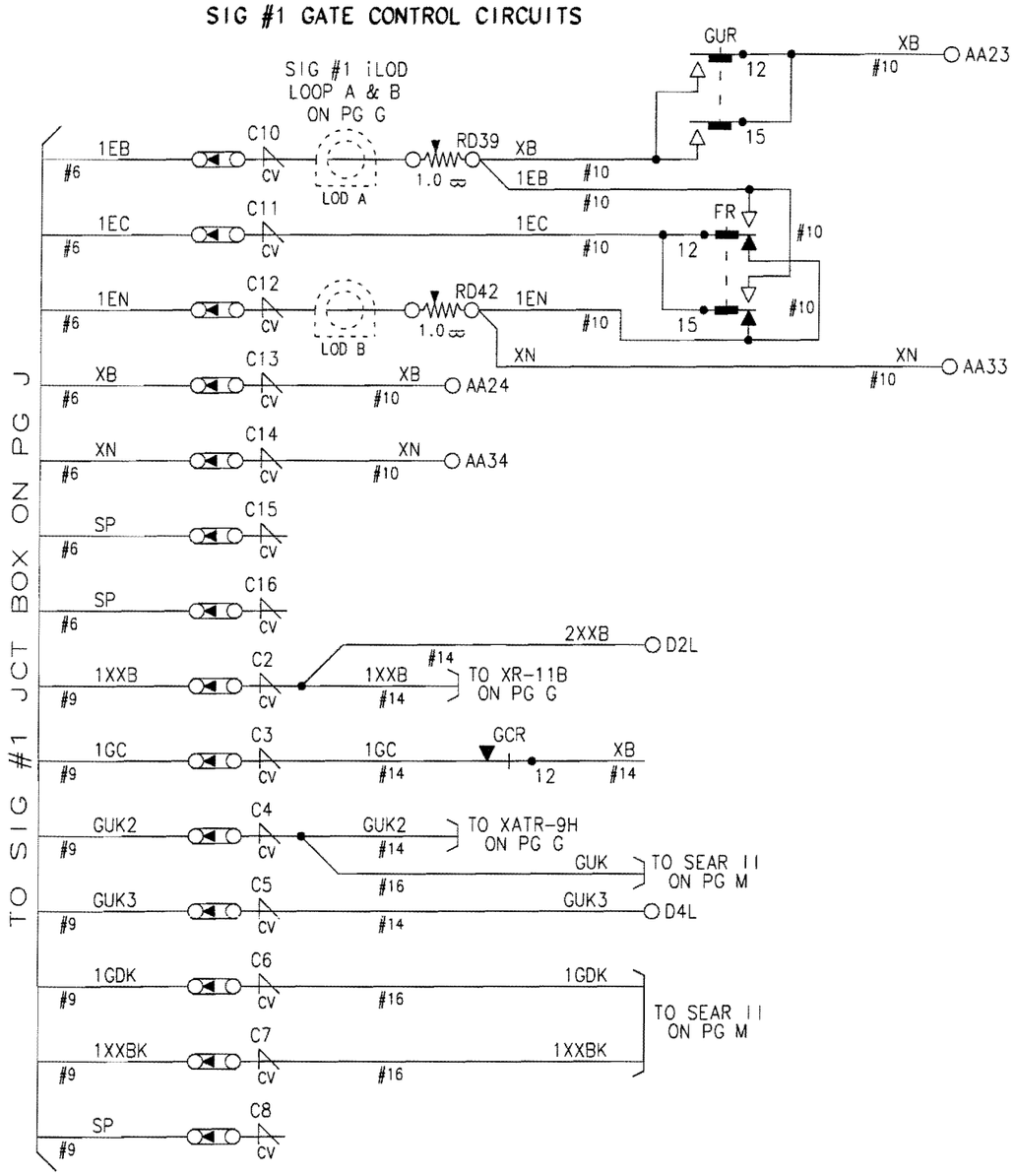

SIG #2 GATE CONTROL CIRCUITS

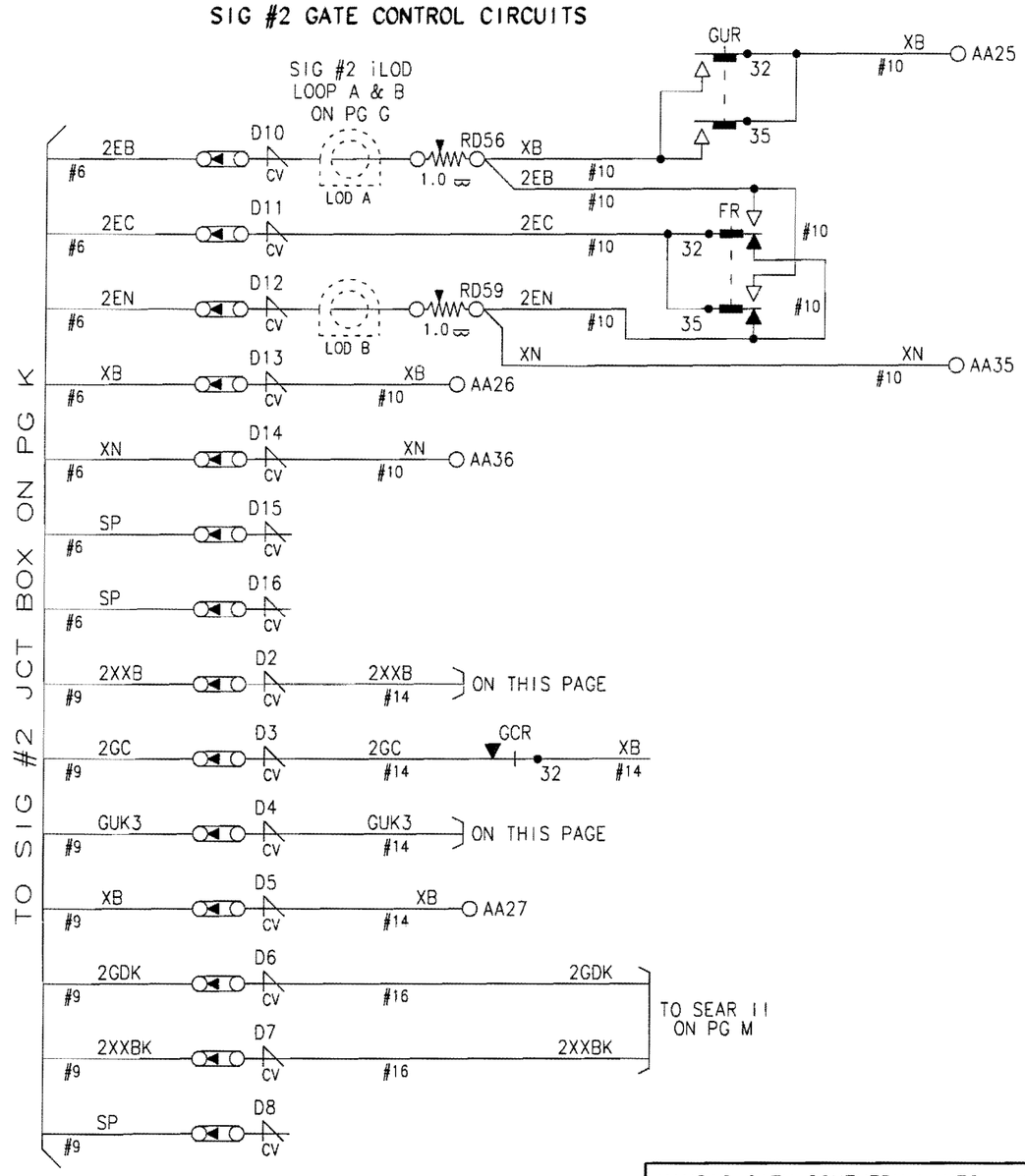

KANSAS CITY SOUTHERN LINES SIGNAL DEPT.

DWG. NO. SD-33-2-046.99H

LOCATION JEFFERSON STREET
KANE, IL

FILE SD-33-5-046.99
DOT NO. 294-579K
MILE POST 046.99

REVISION BLOCK

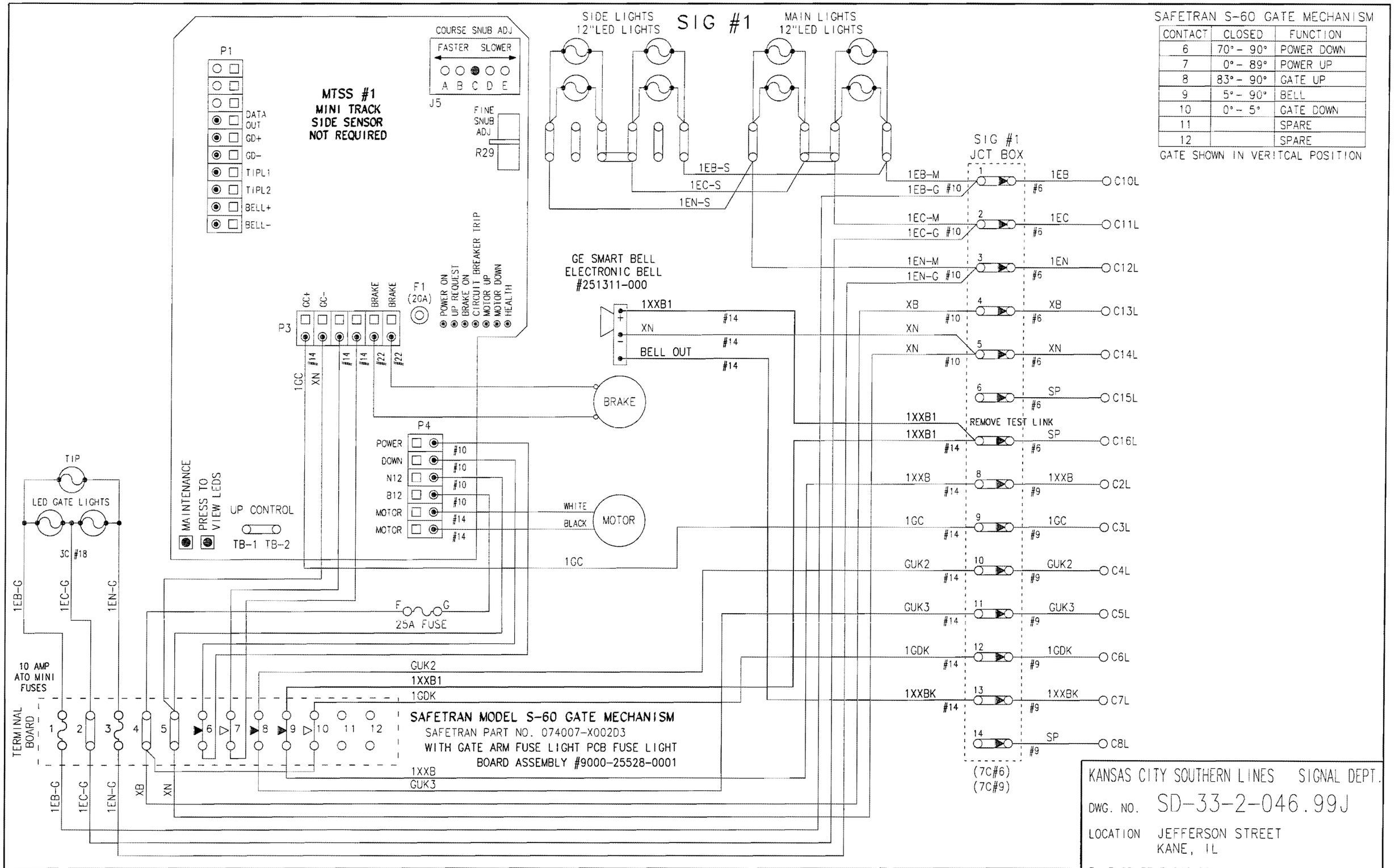

SAFETRAN S-60 GATE MECHANISM

CONTACT	CLOSED	FUNCTION
6	70° - 90°	POWER DOWN
7	0° - 89°	POWER UP
8	83° - 90°	GATE UP
9	5° - 90°	BELL
10	0° - 5°	GATE DOWN
11		SPARE
12		SPARE

GATE SHOWN IN VERITCAL POSITION

KANSAS CITY SOUTHERN LINES SIGNAL DEPT.

DWG. NO. SD-33-2-046.99J

LOCATION JEFFERSON STREET
KANE, IL

FILE SD-33-5-046.99
DOT NO. 294-579K
MILE POST 046.99

REVISION BLOCK

KCSR WIRING CHANGES REQUIRED TO S-60 STANDARD

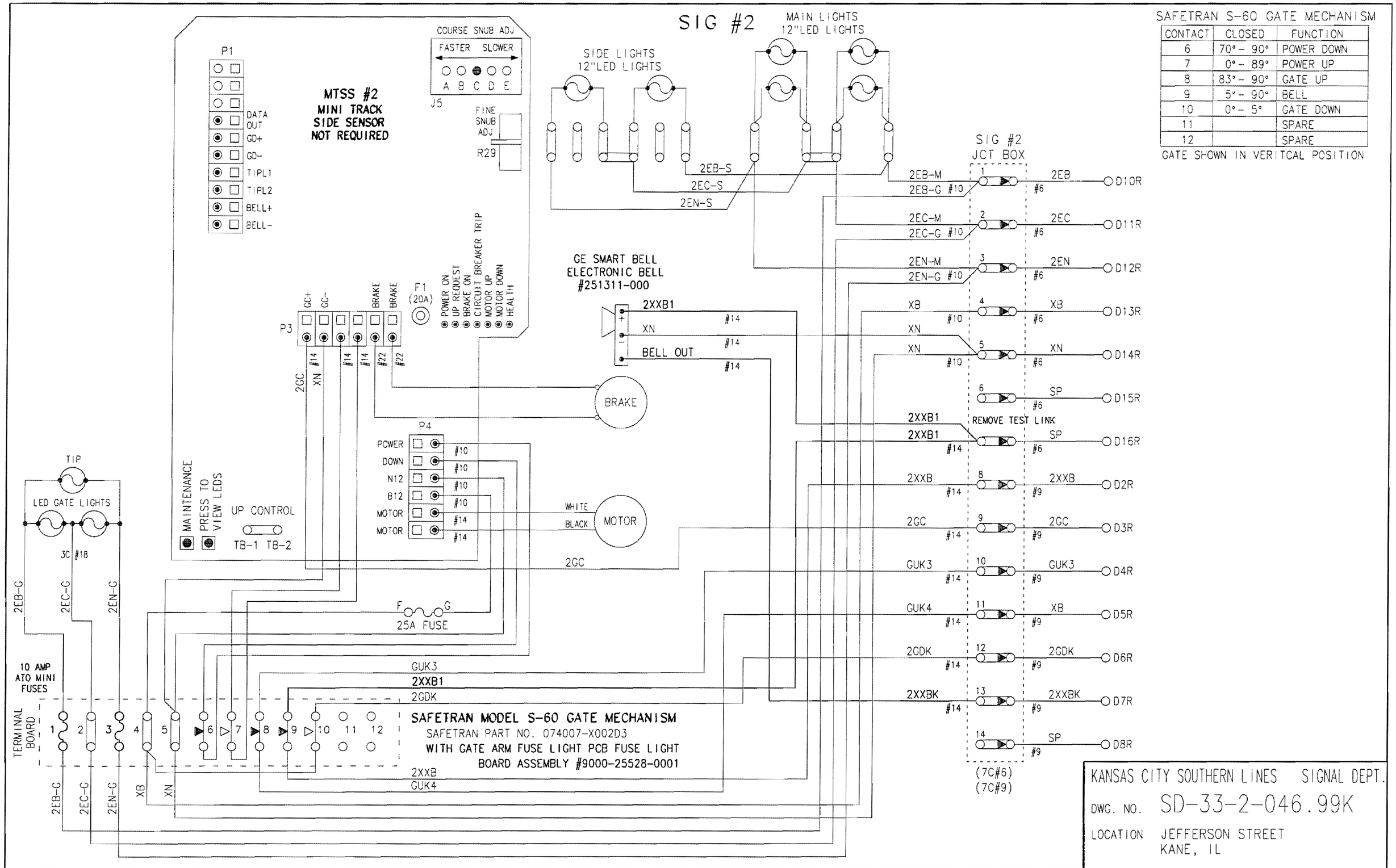

SAFETRAN S-60 GATE MECHANISM

CONTACT	CLOSED	FUNCTION
6	70° - 90°	POWER DOWN
7	0° - 89°	POWER UP
8	83° - 90°	GATE UP
9	5° - 90°	BELL
10	0° - 5°	GATE DOWN
11		SPARE
12		SPARE

GATE SHOWN IN VERITCAL POSITION

KANSAS CITY SOUTHERN LINES SIGNAL DEPT.

DWG. NO. SD-33-2-046.99K

LOCATION JEFFERSON STREET
KANE, IL

FILE SD-33-5-046.99
DOT NO. 294-579K
MILE POST 046.99

REVISION BLOCK

KCSR WIRING CHANGES REQUIRED TO S-60 STANDARD

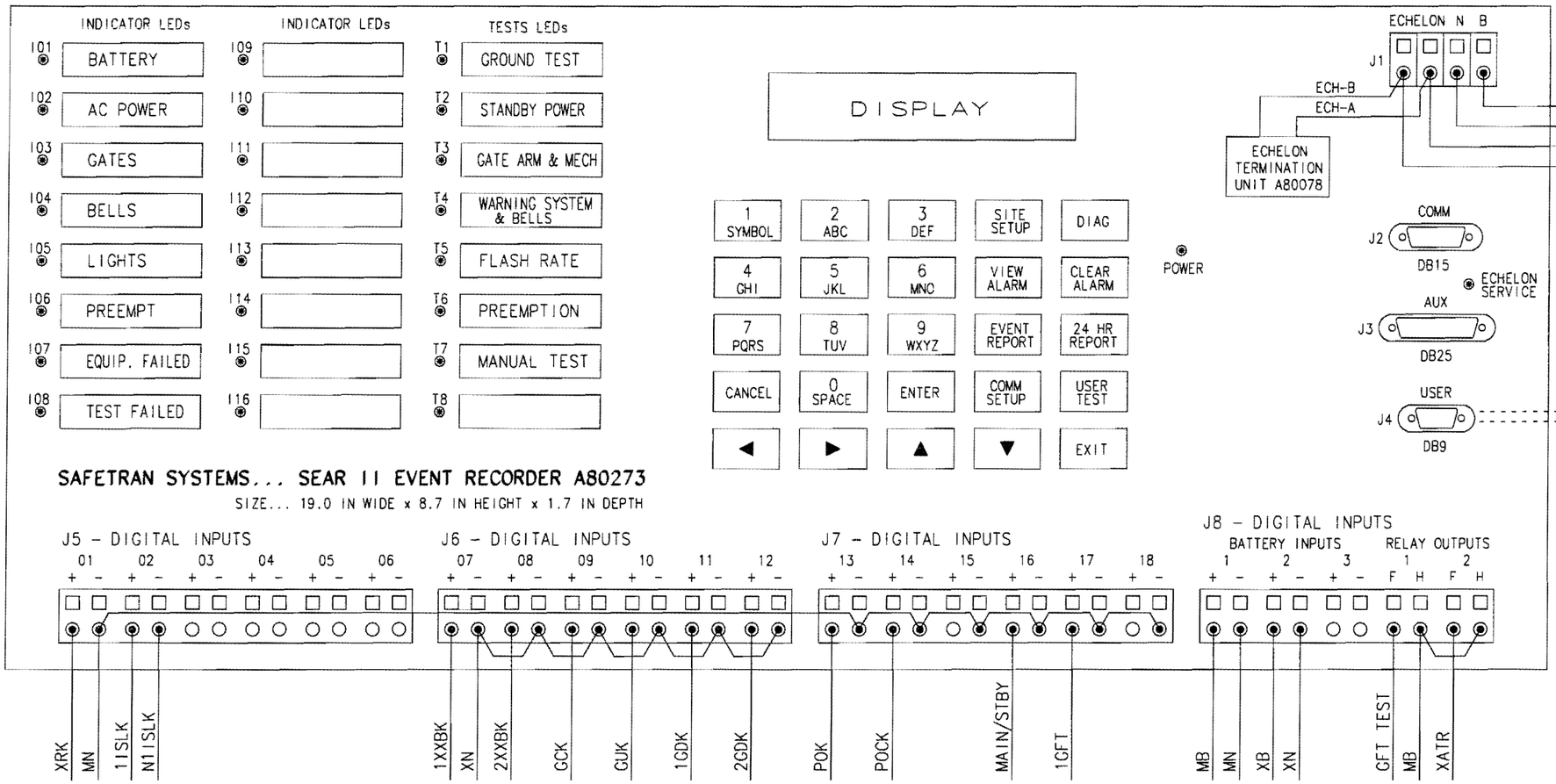

SAFETRAN SYSTEMS... SEAR II EVENT RECORDER A80273

SIZE... 19.0 IN WIDE x 8.7 IN HEIGHT x 1.7 IN DEPTH

KCSR INTENDED USE FOR 18 DIGITAL INPUTS

1	XRK	MOTION DETECTOR INDICATION
2	11SLK	ISLAND INDICATION
3	21SLK	ISLAND INDICATION
4	1AXK	AUXILIARY INDICATION
5	2AXK	AUXILIARY INDICATION
6	3AXK	AUXILIARY INDICATION
7	1XXBK	BELL AUDIO INDICATION
8	2XXBK	BELL AUDIO INDICATION
9	GCK	GATE RELAY INDICATION
10	GUK	GATE UP INDICATION
11	1GDK	GATE DOWN INDICATION
12	2GDK	GATE DOWN INDICATION
13	POK	POWER OFF INDICATION
14	POCK	POWER OFF CHECK INDICATION
15	PREEMPT	PREEMPT INDICATION
16	MAIN/STBY	GCP TRANSFER INDICATION
17	1GFT	GROUND FAULT TESTER
18	2GFT	GROUND FAULT TESTER

KCSR INTENDED USE FOR 3 BATTERY INPUTS

1	MB BATTERY	MAIN OPERATING BATTERY
2	XB BATTERY	1ST LIGHTING BATTERY
3	BATTERY #3	2ND LIGHTING BATTERY

KCSR INTENDED USE FOR 2 RELAY OUTPUTS

1	GFT TEST	GROUND FAULT RELAY
2	XATR	AC OFF CONTROL RELAY

STANDARD LED CONVENTIONS...

1. LEDs ARE OFF WHEN NO ALARM HAS BEEN GENERATED OR AN ALARM HAS BEEN CLEARED USING THE CLEAR ALARM KEY.
2. LEDs FLASH FAST WHEN AN ALARM CONDITION EXISTS.
3. LEDs ARE ON (RED) IF AN ALARM HAS OCCURRED BUT THE ALARM CONDITION NO LONGER EXISTS.
4. THE CLEAR ALARM KEY WILL NOT CLEAR OUT ALARMS IF THEY CURRENTLY EXIST.

TEST LED CONVENTIONS...

1. LEDs ARE YELLOW STEADY WHEN AUTOMATIC INSPECTIONS ARE NOT READY TO EXECUTE.
2. LEDs SLOW FLASH YELLOW WHEN INSPECTIONS ARE READY TO RUN, BUT HAVE NOT YET EXECUTED OR ARE CURRENTLY EXECUTING. (EXAMPLE: AWAITING A TRAIN ARRIVAL)
3. LEDs ARE RED STEADY WHEN AN INSPECTION HAS FAILED.
4. LEDs FAST FLASH GREEN WHEN AN INSPECTION HAS PASSED.
5. THE CLEAR ALARM KEY WILL NOT EFFECT THESE LEDs.
6. A LOCALLY EXECUTED AUTOMATIC TEST WILL RESET ALL LEDs TO SLOW FLASH YELLOW IF PREVIOUS TESTS HAVE PASSED.
7. AFTER SUCCESSFUL PASS FOR ALL TESTS, THE TESTS ARE SENT INTO THE OFFICE AND LEDs ARE GREEN STEADY.

REVISION BLOCK

KANSAS CITY SOUTHERN LINES SIGNAL DEPT.

DWG. NO. SD-33-2-046.99L

LOCATION JEFFERSON STREET
KANE, IL

FILE SD-33-5-046.99
DOT NO. 294-579K
MILE POST 046.99

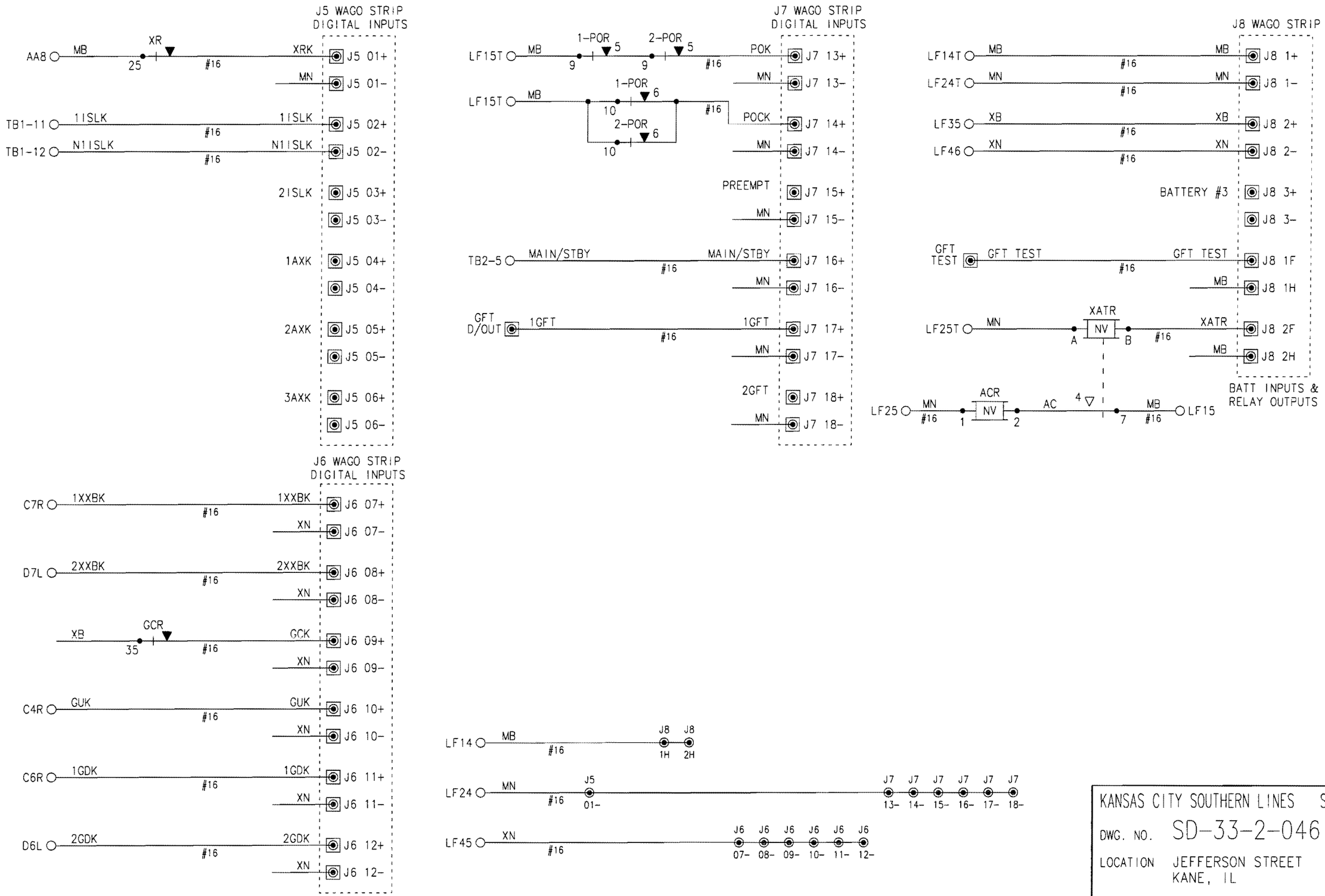

REVISION BLOCK

KANSAS CITY SOUTHERN LINES SIGNAL DEPT.

DWG. NO. SD-33-2-046.99M

LOCATION JEFFERSON STREET
KANE, IL

FILE SD-33-5-046.99
DOT NO. 294-579K
MILE POST 046.99

SEAR II EXECUTIVE PROGRAM — SITE TYPE: VHF HOPPER

MENU QUESTION ?	SITE SETUP	POSSIBLE SELECTIONS AND CONDITION FOR MENU DISPLAY
DATE / TIME ?	XX-XX-XXXX XX:XX:XX	XX-XX-XXXX XX:XX:XX
AUTOMATIC DST ADJUSTMENT ?	YES	SELECTION IS YES OR NO
TIME ZONE ?	CENTRAL	SELECTION IS EASTERN, CENTRAL, ECT.
SITE NAME ?	JEFFERSON ST KANE IL	LIMITED TO 23 CHARACTERS
MILE POST ?	046.99	LIMITED TO 7 DIGITS
DOT NUMBER ?	294579K	LIMITED TO 7 DIGITS
TESTER TYPE ?	CROSSING	SELECTION IS CROSSING OR WAYSIDE
DATE FORMAT ?	MM-DD-YYYY	SELECTION IS MM-DD-YYYY OR DD-MM-YYYY
TEMP. FORMAT ?	FAHRENHEIT	SELECTION IS FAHRENHEIT OR CELSIUS
INIDICATE HOLD (SEC) ?	0	SELECTION IS 0 TO 99
INDICATE REFRESH ?	60	SELECTION IS 0 TO 65535
SITE ATCS ADDRESS ?	7.400.103.829.99.01	TYPE 7 ATCS ADDRESS
SITE TYPE ?	NODE	SELECT NO COMMUNICATION, BULLHORN/MODBUS, DIAL-UP, NODE, COLLECTOR, CDS-902X
OFFICE ATCS ADDRESS ?	2.400.00.0000	IF SITE TYPE = NODE OR COLLECTOR
MODEM PORT ?	N/A	IF SITE TYPE = DIAL-UP SELECTION IS AUX OR COMM
POLL ID ?	N/A	IF SITE TYPE = BULLHORN/MODBUS OR COLLECTOR, SELECTION IS 1 TO 999
PRIMARY HOP ADDR ?	7.400.103.835.99.01	IF SITE TYPE = NODE TR 750N N OF KANE
BACKUP HOP ADDR 1 ?	7.400.103.826.99.01	IF SITE TYPE = NODE MILL ST KANE
BACKUP HOP ADDR 2 ?	7.400.103.835.99.01	IF SITE TYPE = NODE TR 750N N OF KANE
RADIO ATCS ADDR ?	N/A	IF OFFICE COMM DEVICE = MCM RS232, WAG ECH, MCM ECH, ENTER ATCS ADDRESS
MODE ?	N/A	IF SITE TYPE = COLLECTOR SELECTION IS GEN/ATCS OR GENISYS
WAMS XID ?	N/A	IF SITE TYPE = COLLECTOR SELECTION IS ENABLE OR DISABLE
OFFICE COMM. DEVICE ?	N/A	IF SITE TYPE = COLLECTOR, SELECTION IS DIRECT, MCM RS, WAG, MCM ECH, MODEM, S200 RADIO

SEAR II EXECUTIVE PROGRAM — SITE TYPE: VHF HOPPER

MENU QUESTION ?	SITE SETUP	POSSIBLE SELECTIONS AND CONDITION FOR MENU DISPLAY
MCM (RS232) PORT ?	N/A	IF FIELD COMM DEVICE = MCM (RS232) SELECTION IS AUX OR COMM
SPREAD SPEC (RS232) PORT ?	N/A	IF FIELD COMM DEVICE = SPREAD SPEC (RS232) SELECTION IS AUX OR COMM
VHF COMM. (RS232) PORT ?	N/A	IF FIELD COMM DEVICE = VHF COMM (RS232) SELECTION IS AUX OR COMM
DIRECT (RS232) PORT ?	N/A	IF OFFICE COMM DEVICE = DIRECT (RS232) SELECTION IS COMM OR AUX
DIAL MODEM (RS232) PORT ?	N/A	IF OFFICE COMM DEVICE = DIAL MODEM (RS232) SELECTION IS COMM OR AUX
S200 RADIO (RS422) PORT ?	N/A	IF OFFICE COMM DEVICE = S200 RADIO (RS422) SELECTION IS COMM OR AUX
FIELD COMM. DEVICE ?	VHF COMM. (ECHELON)	IF SITE TYPE = NODE OR COLLECTOR, SELECT IS VHF ECH, SPREAD-SPEC, WAG, VHF RS, NONE
PHONE # ?	N/A	IF OFFICE COMM DEVICE = DIAL MODEM (RS232) ENTER 10 DIGIT PHONE NUMBER
INIT STRING ?	N/A	IF SITE TYPE = DIAL-UP, OR OFFICE COMM. DEVICE = DIAL MODEM (RS232) LEAVE BLANK
USER PORT BAUD ? (J4)	57600	SELECTION IS 9600, 19200, 38400, 57600, 300, 600, 1200, 2400, 4800
USER PORT DATA BITS ?	8	SELECTION IS 8 OR 9
USER PORT PARITY ?	NONE	SELECTION IS NONE, ODD, EVEN
USER PORT STOP BITS ?	1	SELECTION IS 1 OR 9
USER PORT FLOW CONTROL	NONE	SELECTION IS NONE, HARDWARE, RADIO
AUX PORT BAUD ? (J3)	9600	SELECTION IS 9600, 19200, 38400, 57600, 300, 600, 1200, 2400, 4800
AUX PORT DATA BITS ?	8	SELECTION IS 8 OR 9
AUX PORT PARITY ?	NONE	SELECTION IS NONE, ODD, EVEN
AUX PORT STOP BITS ?	1	SELECTION IS 1 OR 9
AUX PORT FLOW CONTROL	NONE	SELECTION IS NONE, HARDWARE, RADIO
COMM PORT BAUD ? (J2)	9600 (SEAR II ONLY)	SELECTION IS 9600, 19200, 38400, 57600, 300, 600, 1200, 2400, 4800
COMM PORT DATA BITS ?	8	SELECTION IS 8 OR 9
COMM PORT PARITY ?	NONE	SELECTION IS NONE, ODD, EVEN
COMM PORT STOP BITS ?	1	SELECTION IS 1 OR 9
COMM PORT FLOW CONTROL	NONE	SELECTION IS NONE, HARDWARE, RADIO

N/A = MEANS THIS SELECTION WILL NOT APPEAR BECAUSE OF PRIOR SELECTIONS MADE

SEAR EXECUTIVE SOFTWARE 9V645-A01AA

KANSAS CITY SOUTHERN LINES SIGNAL DEPT.

DWG. NO. SD-33-2-046.99N

LOCATION JEFFERSON STREET
KANE, IL

FILE SD-33-5-046.99
DOT NO. 294-579K
MILE POST 046.99

REVISION BLOCK

EXECUTIVE SETUP AS OF 6/18/09

SITE TYPE = VHF HOPPER

KCS VERSION OF SEAR PROGRAM MENU ITEMS – SITE SETUP

QUESTION ?	SITE SETUP	POSSIBLE SELECTIONS AND CONDITION FOR MENU DISPLAY
XR INPUT ?	YES	SELECTION YES OR NO
ISLAND INPUTS ?	1	SELECTION 0 TO 2
BELL OUT INPUTS ?	2	SELECTION 0 TO 2
GATE CONTROL INPUT ?	YES	SELECTION YES OR NO
GATE UP INPUT ?	YES	SELECTION YES OR NO
GATE DOWN INPUTS ?	2	SELECTION 0 TO 2
POWER OFF INPUT ?	YES	SELECTION YES OR NO
POWER OFF CHECK INPUT ?	YES	SELECTION YES OR NO IF POWER OFF INPUT = YES
PREEMPT INPUT ?	NO	SELECTION YES OR NO
PREEMPT TIME SECS ?	N/A	SELECTION 0 TO 60 IF PREEMPT INPUT = YES
MAIN / STANDBY INPUT ?	YES	SELECTION YES OR NO
BATTERY INPUTS ?	2	SELECTION 0 TO 3
GFT INPUTS ?	1	SELECTION 0 TO 2 IF BATTERY INPUTS > 0
iLOD MODULES ?	2	SELECTION 0 TO 4
ANY LED BULBS USED ?	YES	SELECTION YES OR NO IF iLOD MODULES > 0
AUTO INSPECTIONS ?	YES	SELECTION YES OR NO
VHF COMMUNICATOR ?	YES	SELECTION YES OR NO
VHF CHANNEL ?	3	SELECTION 1 TO 8 IF VHF COMMUNICATOR = YES
NUMBER OF TRACKS ?	1	SELECTION 1 OR 2
CUT-OUT CIRCUITS ?	NO	SELECTION YES OR NO
TIMING DEVICE PRESENT ?	NO	SELECTION YES OR NO
HOLD CLEAR DEVICE PRESENT ?	NO	SELECTION YES OR NO

BATTERY INPUT CONFIGURATION

CHANNEL	NAME	RESOLUTION	MENU CONDITION
01	MB	1 VDC	BATTERY INPUTS > 0
02	XB	1 VDC	BATTERY INPUTS = 2
02	1XB	1 VDC	BATTERY INPUTS = 3
03	2XB	1 VDC	BATTERY INPUTS = 3

STANDARD DIGITAL AND BATTERY INPUT NAMES MUST BE USED TO ENABLE CORRESPONDING APPLICATION ALARMS. INPUTS ARE AUTOMATICALLY DETECTED BY THE APPLICATION PROGRAM.

RELAY OUTPUT CONFIGURATION

CHANNEL	NAME	DESIGNATOR	NORMAL	ENERGIZED	DE-ENERGIZED	MENU CONDITION
01	GFT TEST	GFTTEST	OFF	ON	OFF	GFT INPUTS > 0
02	AC POWER TEST	ACTEST	OFF	ON	OFF	IF AUTO INSPECTIONS = YES

SEAR APPLICATION SOFTWARE 9V505-A01A

KANSAS CITY SOUTHERN LINES SIGNAL DEPT.

DWG. NO. SD-33-2-046.99P

LOCATION JEFFERSON STREET
KANE, IL

FILE SD-33-5-046.99
DOT NO. 294-579K
MILE POST 046.99

REVISION BLOCK

APPLICATION SETUP AS OF 6/18/09

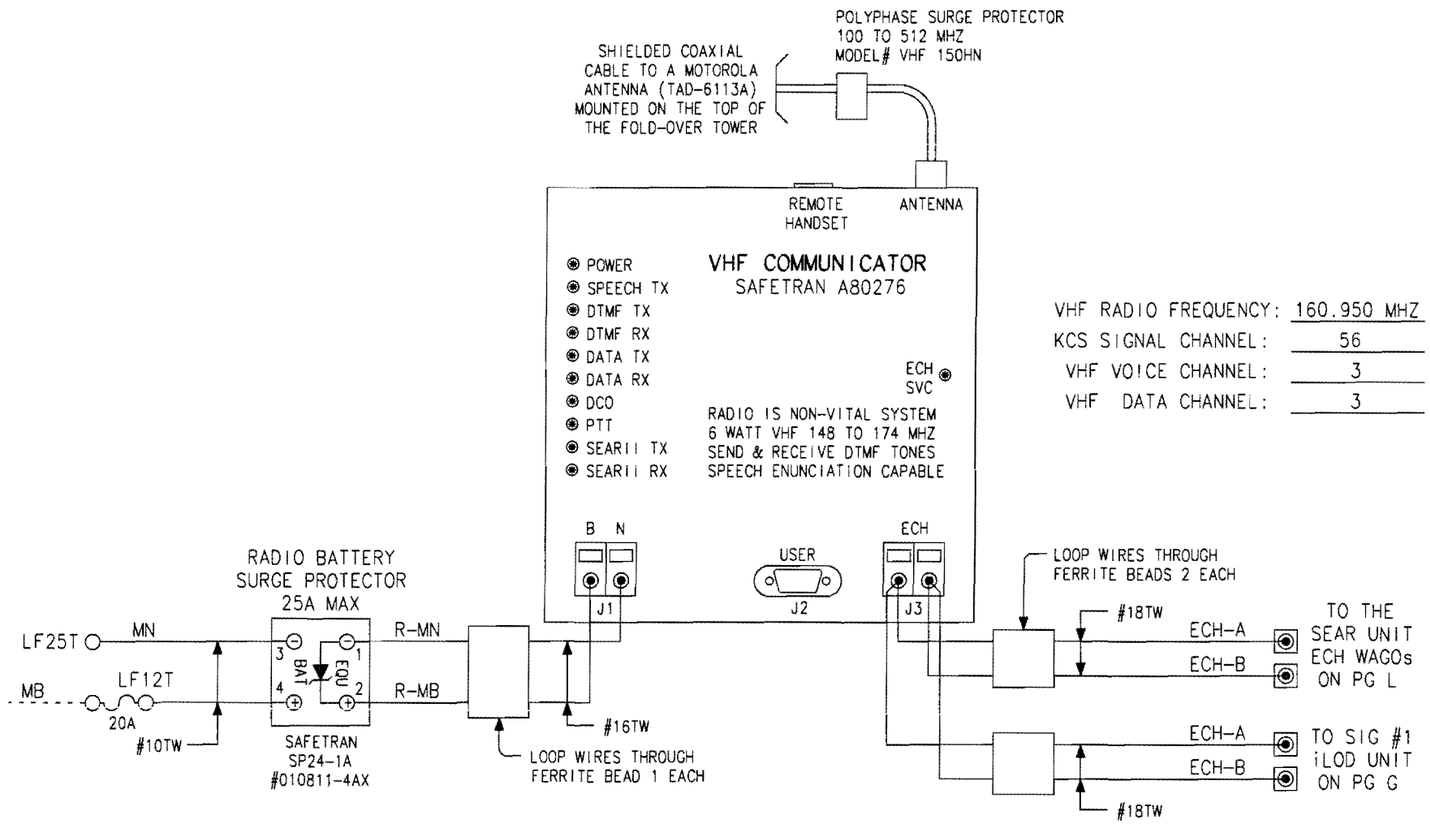

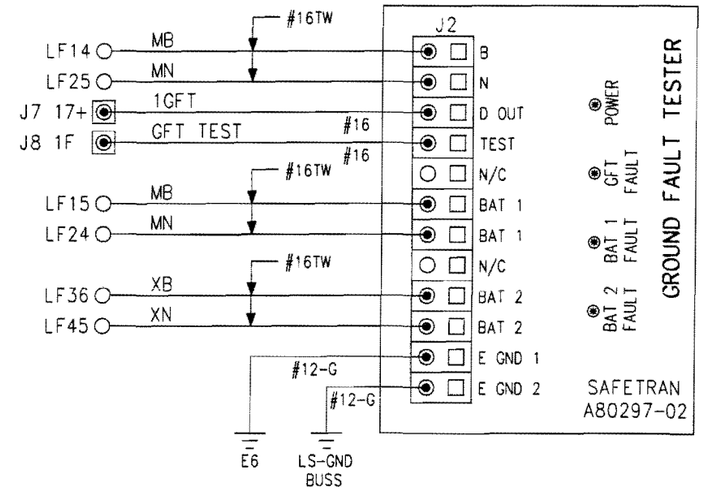

VHF RADIO FREQUENCY: 160.950 MHZ
KCS SIGNAL CHANNEL: 56
VHF VOICE CHANNEL: 3
VHF DATA CHANNEL: 3

REVISION BLOCK

KANSAS CITY SOUTHERN LINES SIGNAL DEPT.

DWG. NO. SD-33-2-046.99Q

LOCATION JEFFERSON STREET
KANE, IL

FILE SD-33-5-046.99
DOT NO. 294-579K
MILE POST 046.99

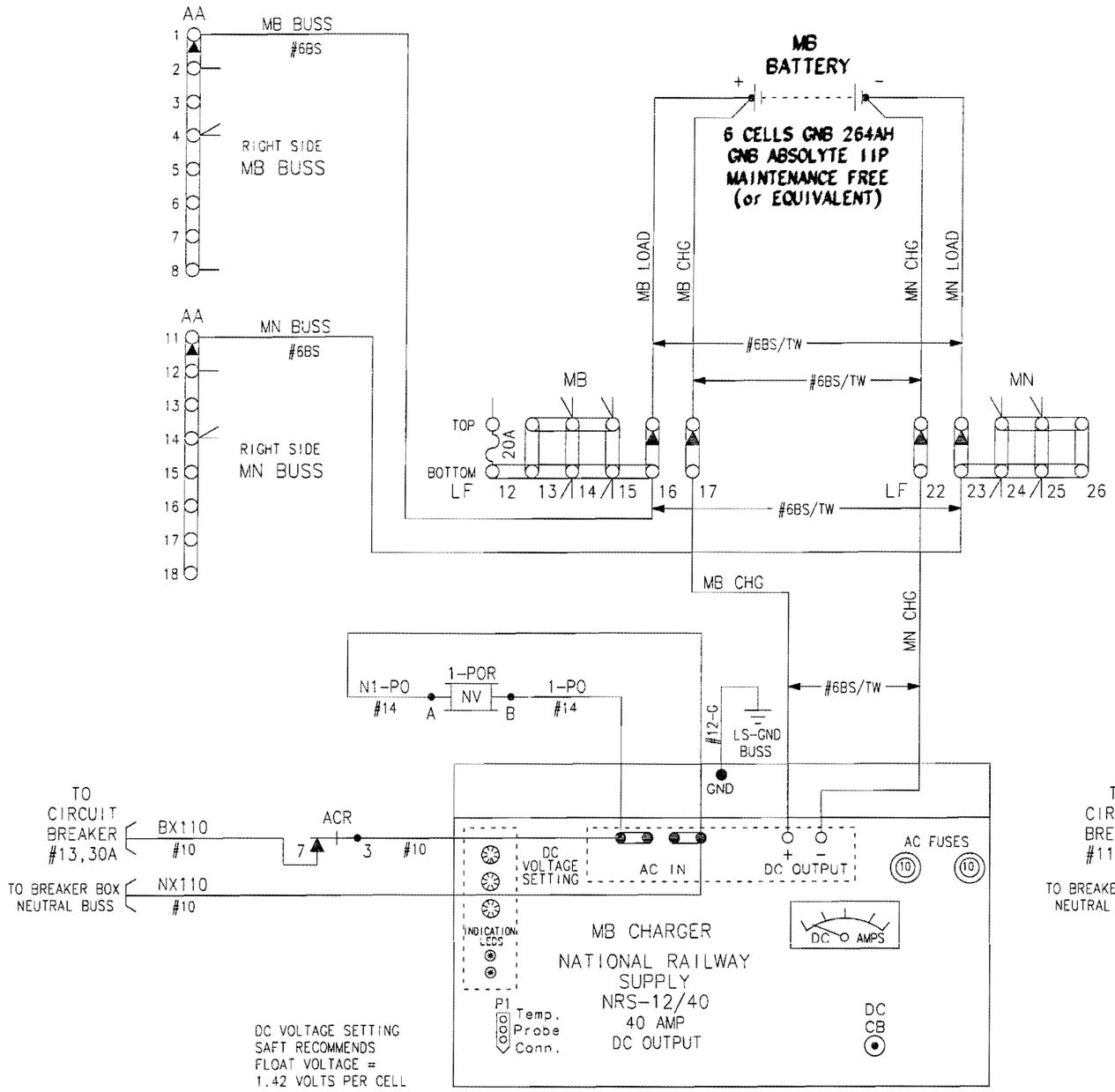

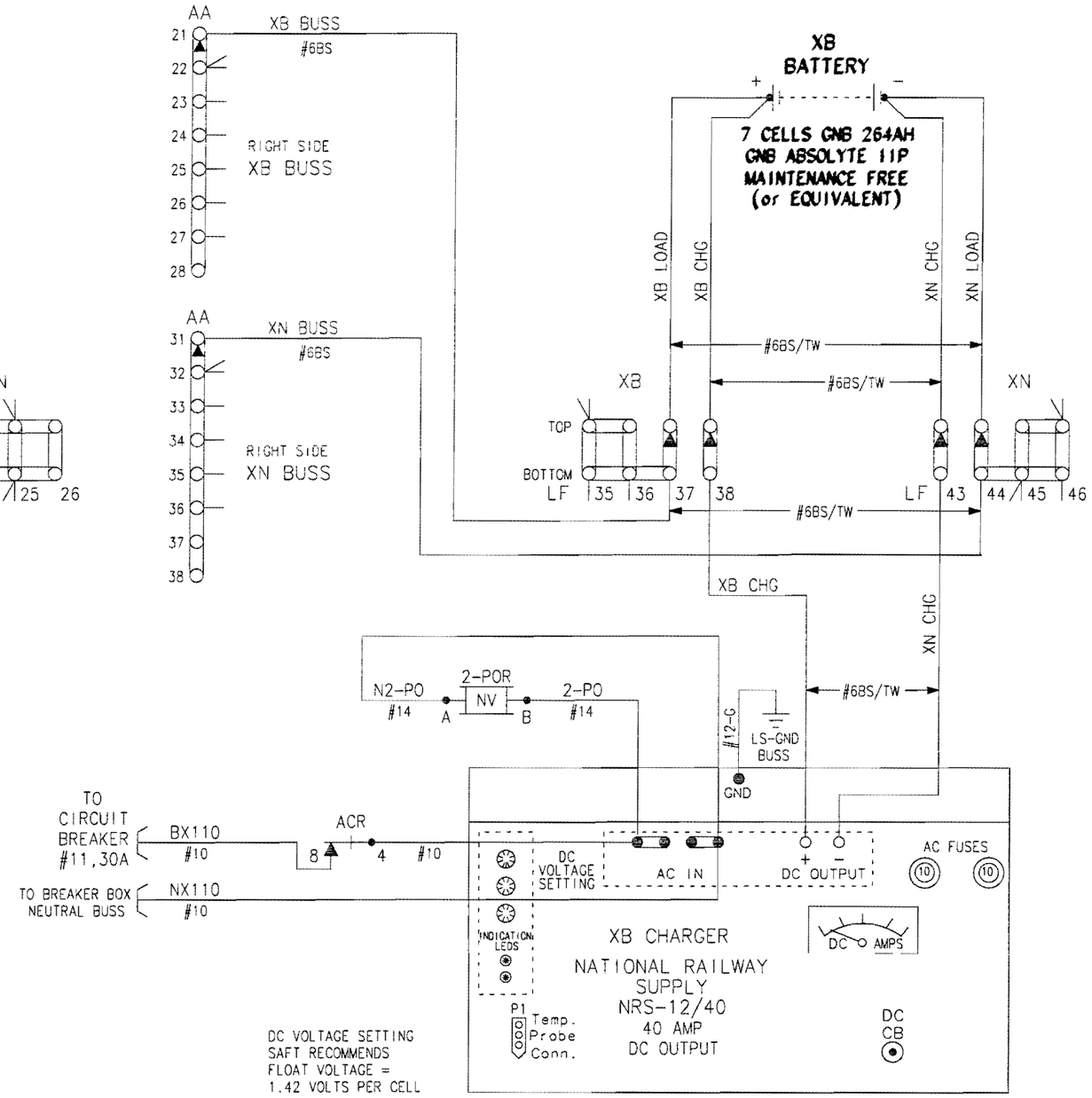

ESTIMATE MB BATTERY LOADS...

GCP 3000 UNIT	1.25	amp @ 13.2vdc
SEAR II UNIT	0.80	amp @ 13.2vdc
VHF RADIO TX		amp @ 13.2vdc
MISC EQUIP	0.60	amp @ 13.2vdc
TOTAL	2.65	amp @ 13.2vdc

BATTERY WIRING NOTE...
FOR ALL LOAD AND CHARGE WIRING
BETWEEN THE CHARGER AND BATTERY,
POSITIVE SHALL BE RED BONDSTRAND
NEGATIVE SHALL BE BLACK BONDSTRAND
CLEARLY TAGGED MB & MN, OR XB & XN

KANSAS CITY SOUTHERN LINES SIGNAL DEPT.

DWG. NO. SD-33-2-046.99R

LOCATION JEFFERSON STREET
KANE, IL

FILE SD-33-5-046.99
DOT NO. 294-579K
MILE POST 046.99

REVISION BLOCK

SPECIAL BATTERY FOR CHARLIE SHAFFER's TERRITORY, MB & XB GNB MNTCE FREE 264 AH

WITH XR DOWN AND EITHER POR DOWN, STROBE WILL BE TURNED-ON

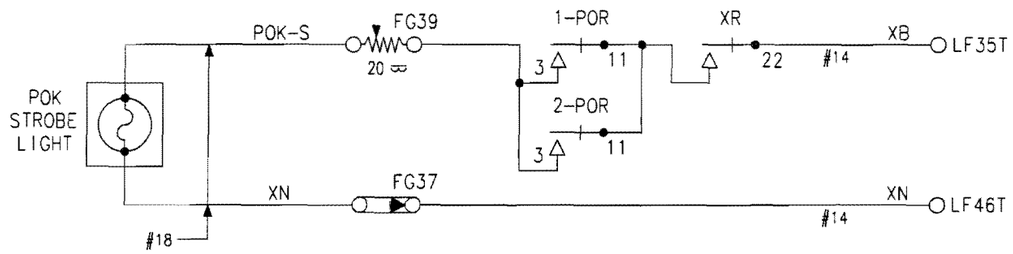

IF EITHER POR RELAY IS DOWN, POK LIGHTS ARE TURNED-OFF

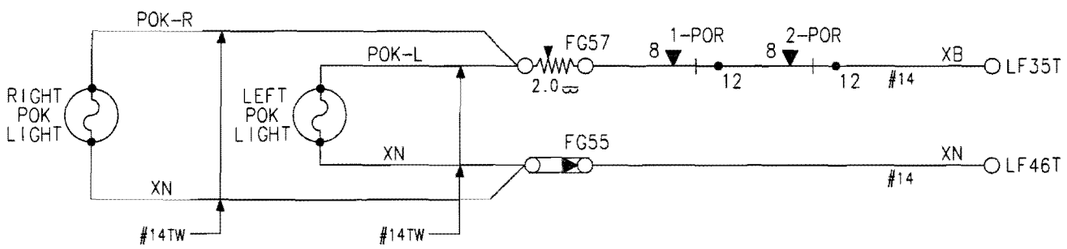

GROUNDING GRID

RIGHT SIDE OF BUNGALOW
ABOVE CABLE ENTRANCE

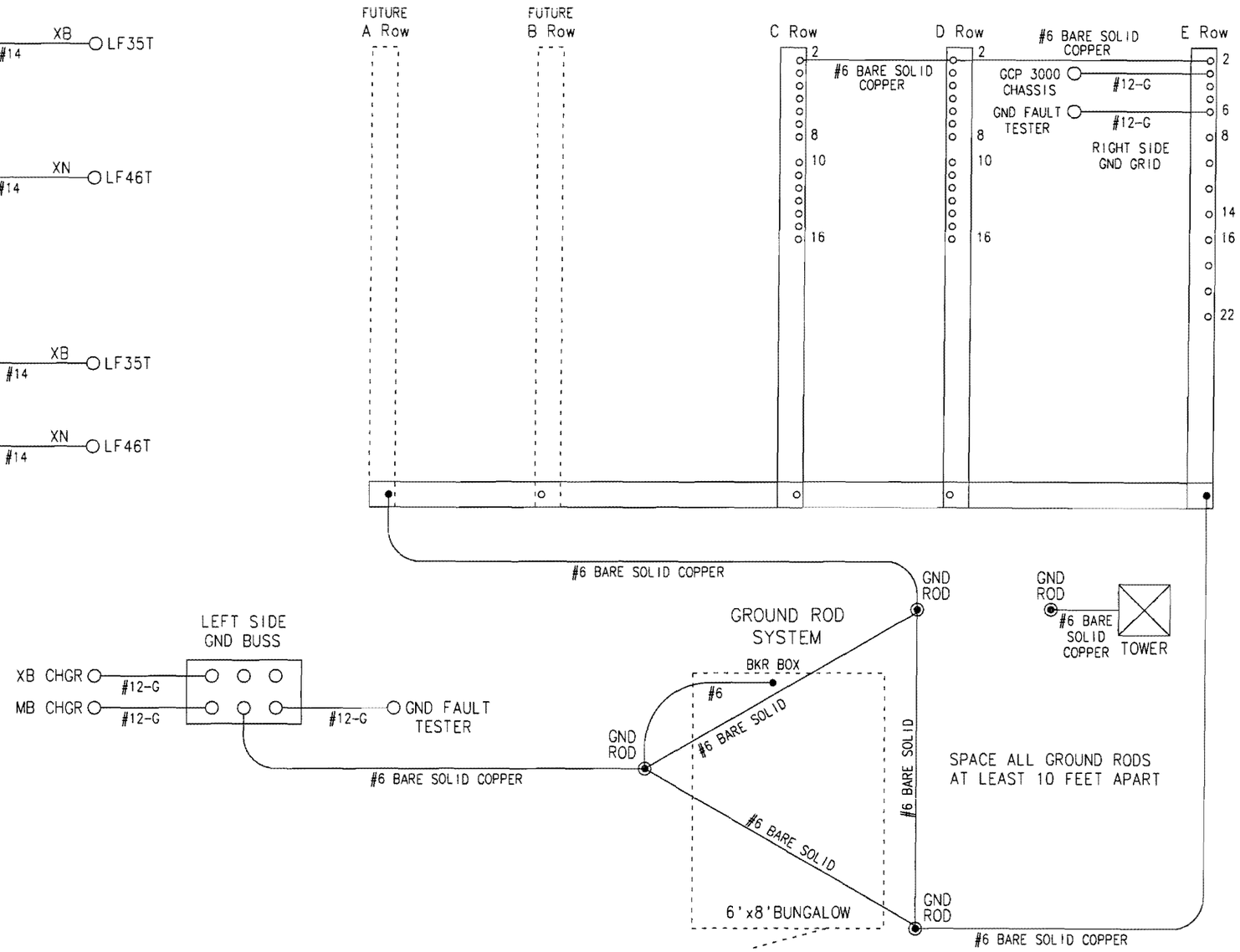

GROUND WIRE SPECIFICATIONS...

1. ALL GROUND WIRES SHALL BE SOLID COPPER CONDUCTOR.
2. ALL GROUND WIRES SHOULD NOT BE PLACED IN PANDUIT OR IN OVERHEAD CABLE TRAYS, IF NECESSARY TO CROSS THROUGH PANDUIT DO SO AT A 90° ANGLE.
3. ALL GROUND WIRES SHOULD BE ROUTED TO MINIMIZE WIRE LENGTH AND MINIMIZE SHARP BENDS IN THE WIRE.

KANSAS CITY SOUTHERN LINES SIGNAL DEPT.

DWG. NO. SD-33-2-046.99S

LOCATION JEFFERSON STREET
KANE, IL

FILE SD-33-5-046.99
DOT NO. 294-579K
MILE POST 046.99

REVISION
BLOCK

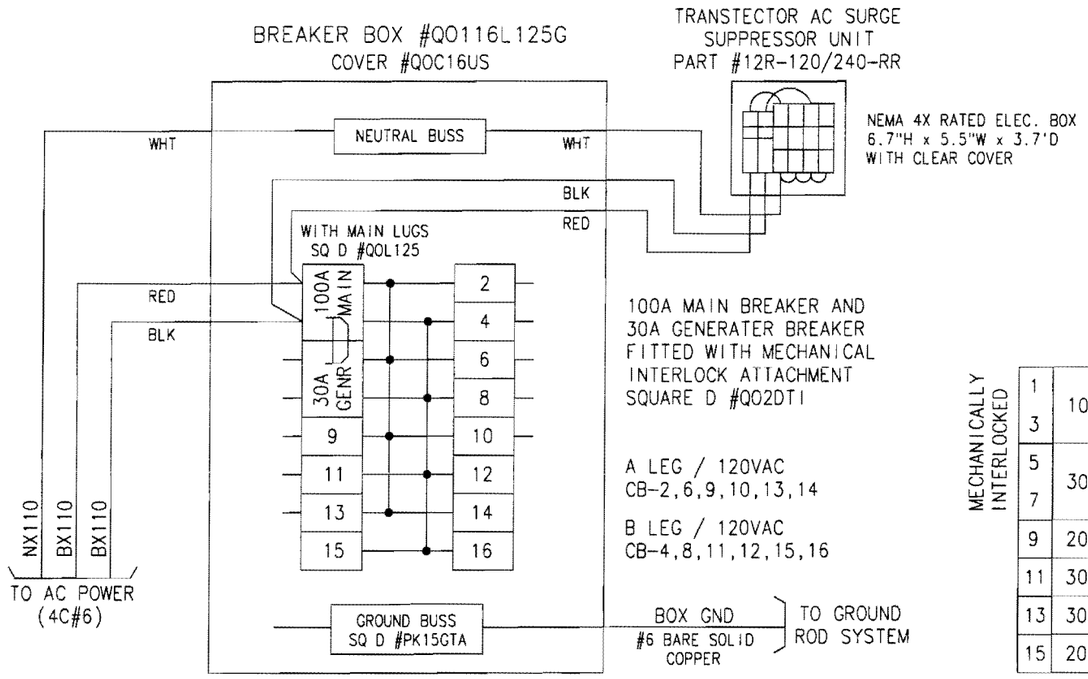

ALL NX110 (#12-W) WIRES ARE CONNECTED TO THE NEUTRAL BUSS
ALL GND (#12-G) WIRES ARE CONNECTED TO THE GND BUSS
USE #12 STRANDED WIRE ON ALL ELECTRICAL CIRCUITS

ARRANGEMENT OF BREAKERS

MECHANICALLY INTERLOCKED				
1	100A MAIN		15A EXH FAN	2
3			15A BUNG LIGHTS	4
5	30A GENERATOR		20A FRONT GFI	6
7			20A BACK GFI	8
9	20A AIR COND		20A HEATER	10
11	30A XB CHARGER		30A SPARE	12
13	30A MB CHARGER		30A SPARE	14
15	20A SPARE		20A SPARE GFI	16

1 EA. 100A BREAKER #QO2100
1 EA. 30A BREAKER #QO230
4 EA. 30A BREAKER #QO130
3 EA. 20A BREAKER #QO120
2 EA. 15A BREAKER #QO115
3 EA. 20A BREAKER #QO-GFI-120

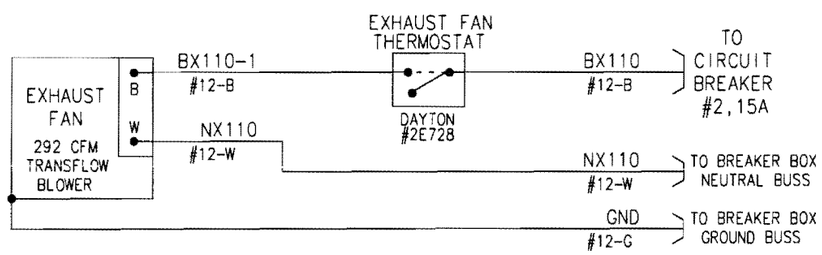

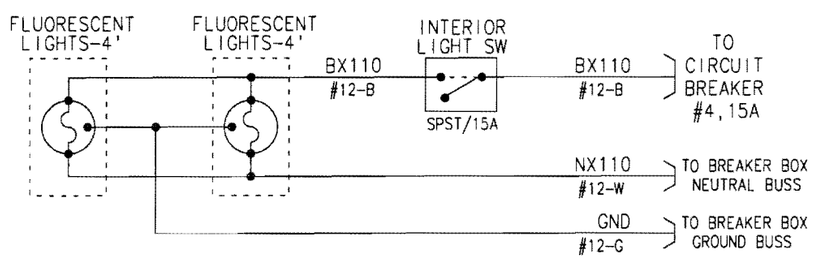

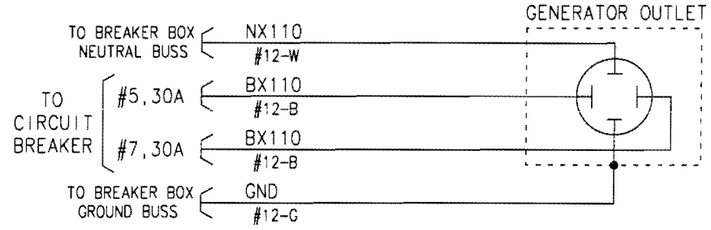

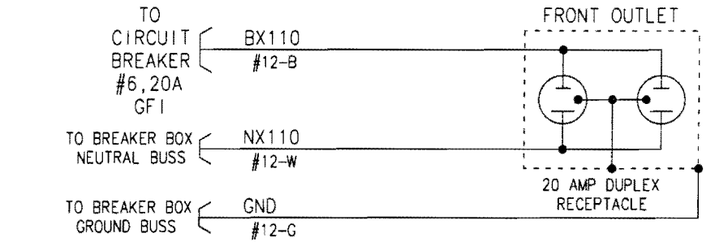

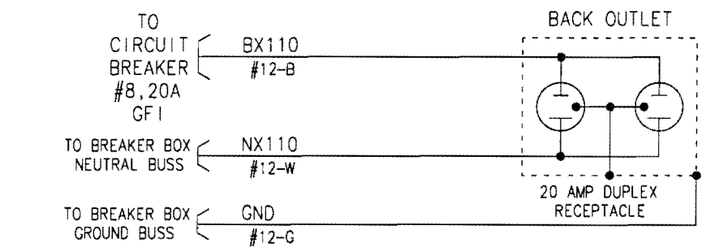

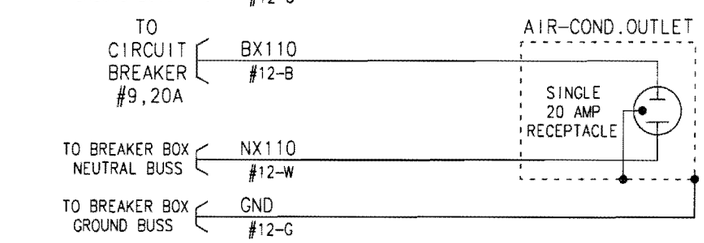

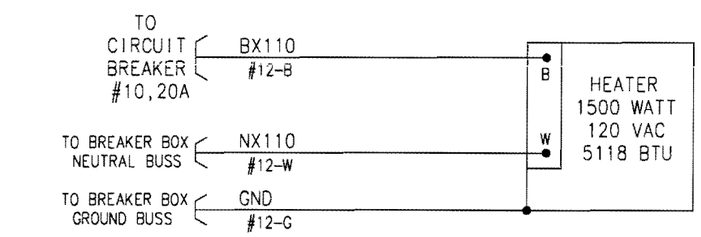

KANSAS CITY SOUTHERN LINES SIGNAL DEPT.

DWG. NO. SD-33-2-046.99T

LOCATION JEFFERSON STREET
KANE, IL

FILE SD-33-5-046.99
DOT NO. 294-579K
MILE POST 046.99

REVISION BLOCK

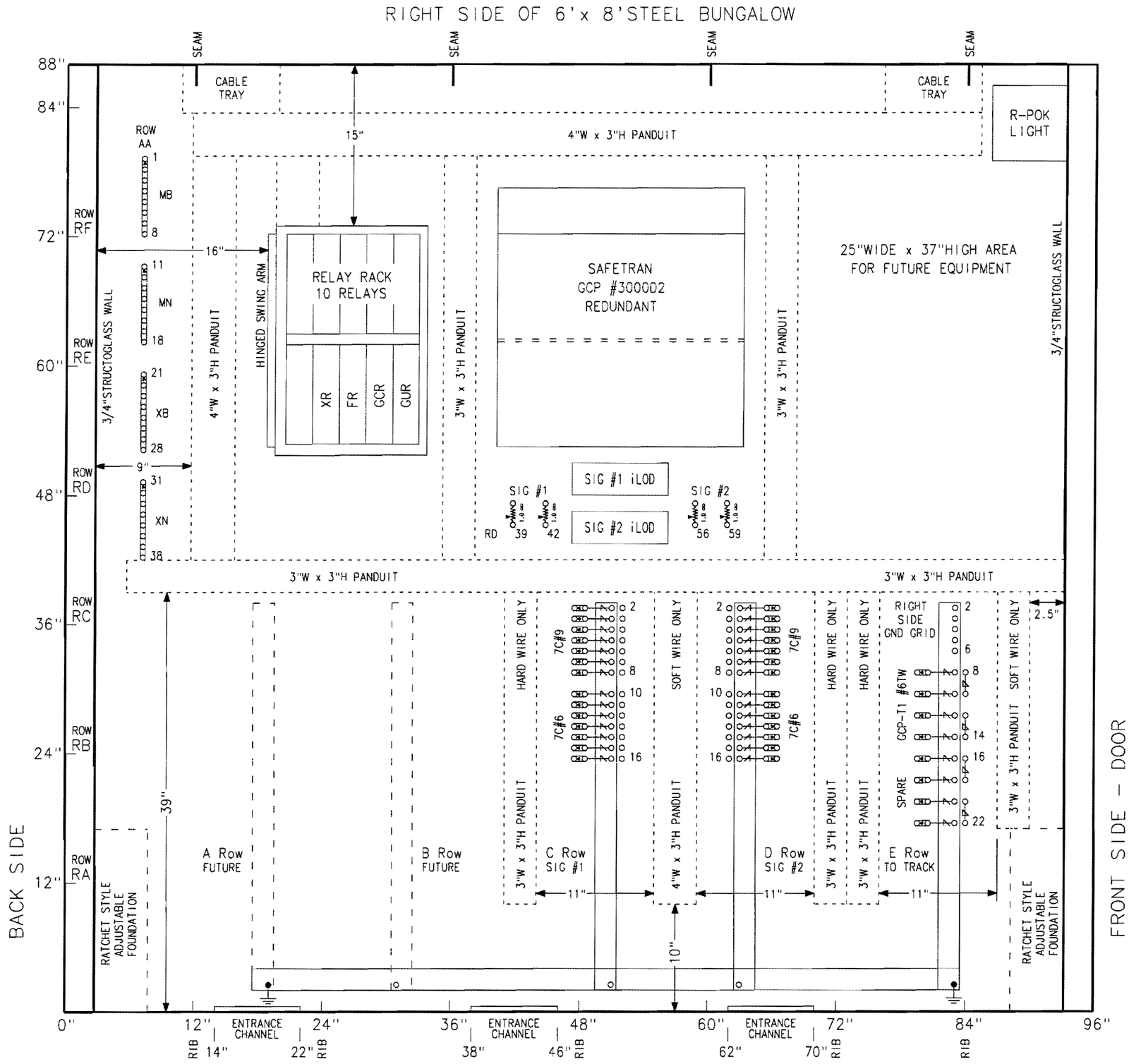

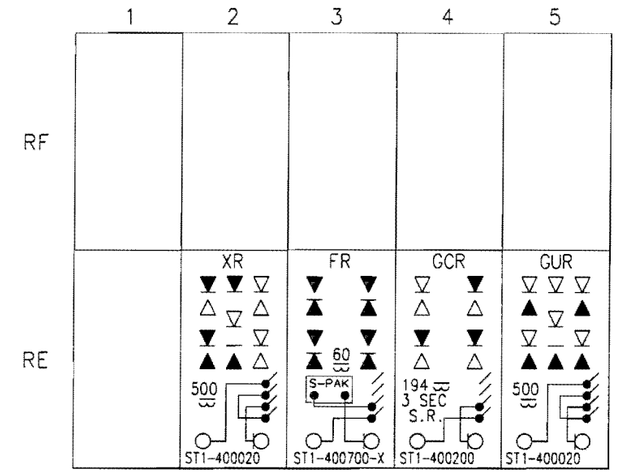

RD RESISTORS MATERIAL:

4 EA. LIGHTING RESISTORS 1.0 OHM #029602-3X

AA BATTERY BUSS MATERIAL:

4 EA. UNIVERSAL TERMINAL BLOCK (12-POST) #023390-11X
24 EA. 1"FLAT CONNECTING LINK #023839-2
4 EA. 1"INSULATED TEST LINK #024620-1X
(WITH GOLD TEST LINK NUT & CLAMP NUT)

ENTRANCE TERMINAL MATERIAL:

8 EA. HEAVY DUTY ARRESTER #022585-1X
4 EA. EQUALIZER ARRESTER #022700-1X
28 EA. CLEARVIEW ARRESTER #022485-28X
36 EA. 4-POINT TERMINALS, TO INCLUDE NUTS, WASHERS AND TEST LINKS: ERICO PART #B2700A2C1WH
3 EA. GROUND BUSS BAR 36", ERICO PART #B2700HC36T
1 EA. UNIVERSAL TERMINAL BLOCK (6-POST) #023390-11-6X
(USED AS RIGHT SIDE GND BUSS E2-E6)

REVISION BLOCK

KANSAS CITY SOUTHERN LINES SIGNAL DEPT.

DWG. NO. SD-33-2-046.99U

LOCATION JEFFERSON STREET
KANE, IL

FILE SD-33-5-046.99
DOT NO. 294-579K
MILE POST 046.99

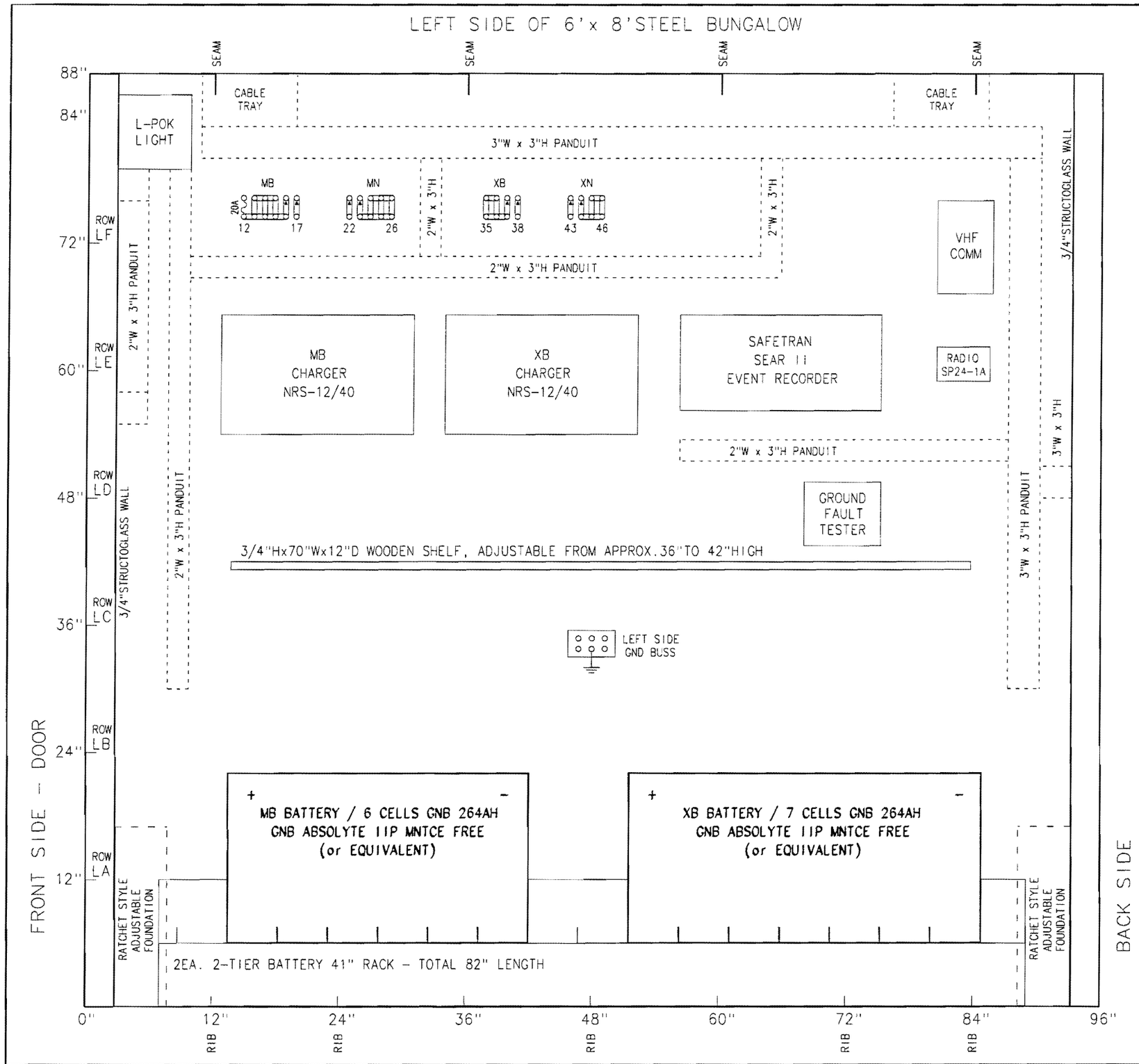

LF BATTERY BUSS MATERIAL:

18 EA. 2-POINT TERMINAL, NO CONNECTING LINK #023612-1X
10 EA. 2-3/8" FLAT CONNECTING LINK #023839-1
17 EA. 1" FLAT CONNECTING LINK #023839-2
8 EA. 2-3/8" INSULATED TEST LINK #024620-4X
(WITH GOLD TEST LINK NUT & CLAMP NUT)
1 EA. FUSE, 20A, REN-20
1 EA. FUSE HOLDER, SINGLE BAKELITE, #025618-1X

GROUND BUSS MATERIAL:

1 EA. GROUND PLATE BUSS BAR PTMW #51081
1 EA. GROUND PLATE WELDMENT PTMW #51080

KANSAS CITY SOUTHERN LINES SIGNAL DEPT.

DWG. NO. SD-33-2-046.99V

LOCATION JEFFERSON STREET
KANE, IL

FILE SD-33-5-046.99
DOT NO. 294-579K
MILE POST 046.99

REVISION BLOCK

SPECIAL BATTERY FOR CHARLIE SHAFFER's TERRITORY, MB & XB GNB MNTCE FREE 264 AH

FRONT SIDE OF 6'x 8'STEEL BUNGALOW

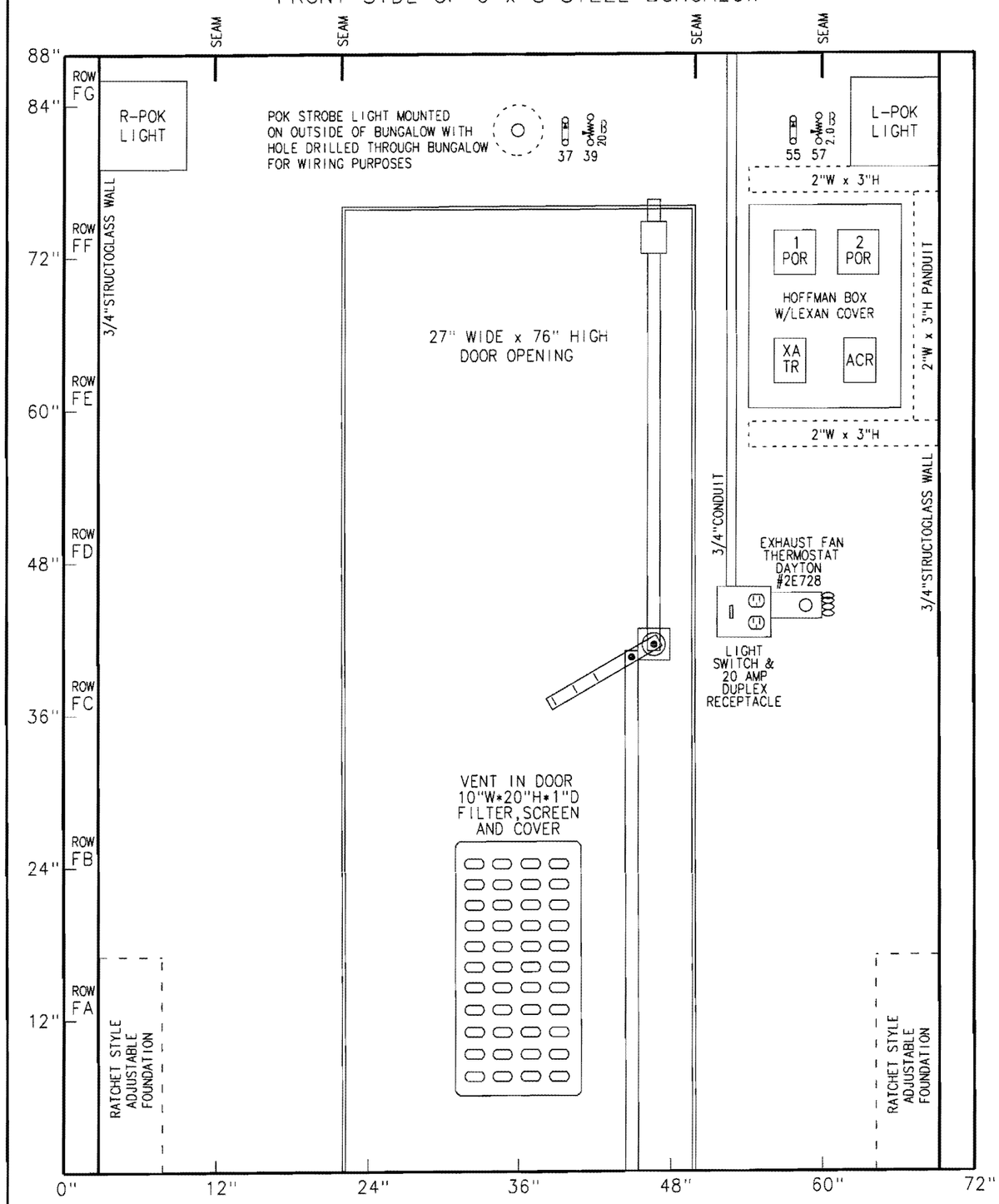

XATR RELAY & SOCKET #27E121

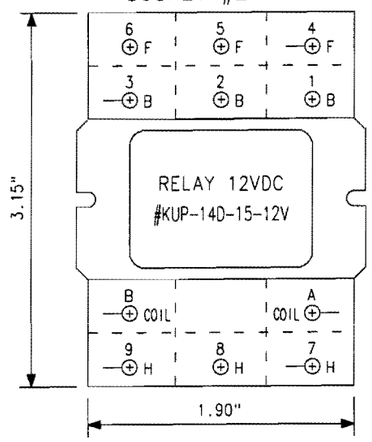

CONTACT - SOCKET TERMINAL NO.
1st CONTACT - 9H, 6F, 3B
2nd CONTACT - 8H, 5F, 2B
3rd CONTACT - 7H, 4F, 1B
CONTACT RATING: 10A MAX.
RELAY COILS - A, B (120 OHMS)

ACR RELAY

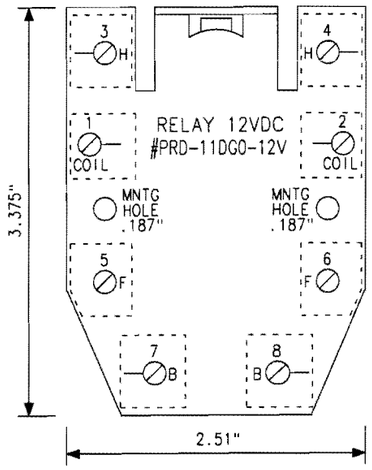

CONTACT - SOCKET TERMINAL NO.
1st CONTACT - 3H, 5F, 7B
2nd CONTACT - 4H, 6F, 8B
CONTACT RATING: 30A MAX.
RELAY COILS - 1, 2 (71 OHMS)

TYPICAL 1-POR & 2-POR RELAY & SOCKET #27E867

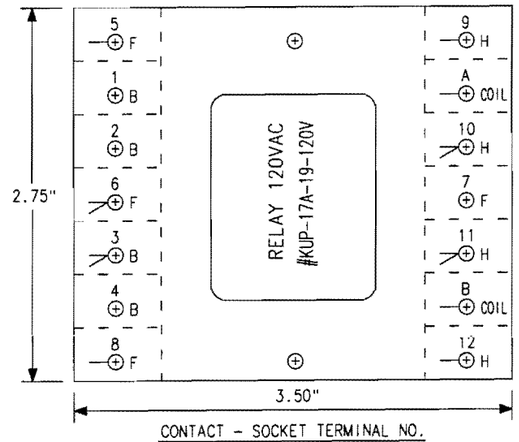

CONTACT - SOCKET TERMINAL NO.
1st CONTACT - 9H, 5F, 1B
2nd CONTACT - 10H, 6F, 2B
3rd CONTACT - 11H, 7F, 3B
4th CONTACT - 12H, 8F, 4B
CONTACT RATING: 10A MAX.
RELAY COILS - A, B (2,250 OHMS)

POWER OFF MATERIAL:

1 EA. HOFFMAN BOX WITH LEXAN COVER #ASE16X12X4
1 EA. RESISTOR 2.0 OHM ADJUSTABLE #029602-6X
1 EA. RESISTOR 20 OHM ADJUSTABLE #029603-23X
2 EA. RELAY, P&B 120 VAC, 4FB #KUP-17A-19-120V
POR - (WITH FOUR 10A CONTACTS AT 28VDC)
1 EA. RELAY, P&B 12 VDC, 3FB #KUP-14D-15-12V
XATR - (WITH THREE 10A CONTACTS AT 28VDC)
1 EA. RELAY, P&B 12 VDC, 2FB #PRD-11DG0-12V
ACR - (WITH TWO 30A CONTACTS AT 240VAC)
2 EA. RELAY SOCKET P&B, #27E867 (POR)
2 EA. INSULATOR PAD, #40G432 (POR)
2 EA. RELAY HOLD DOWN CLIP, #20C254 (POR)
1 EA. RELAY SOCKET P&B, #27E121 (XATR)
2 EA. RELAY HOLD DOWN CLIP, #20C314 (XATR)
2 EA. 2-POINT TERMINAL, NO CONNECTING LINK #023612-1X
2 EA. 2-3/8" INSULATED TEST LINK #024620-4X
(WITH GOLD TEST LINK NUT & CLAMP NUT)

KANSAS CITY SOUTHERN LINES SIGNAL DEPT.

DWG. NO. SD-33-2-046.99W

LOCATION JEFFERSON STREET
KANE, IL

FILE SD-33-5-046.99
DOT NO. 294-579K
MILE POST 046.99

REVISION BLOCK

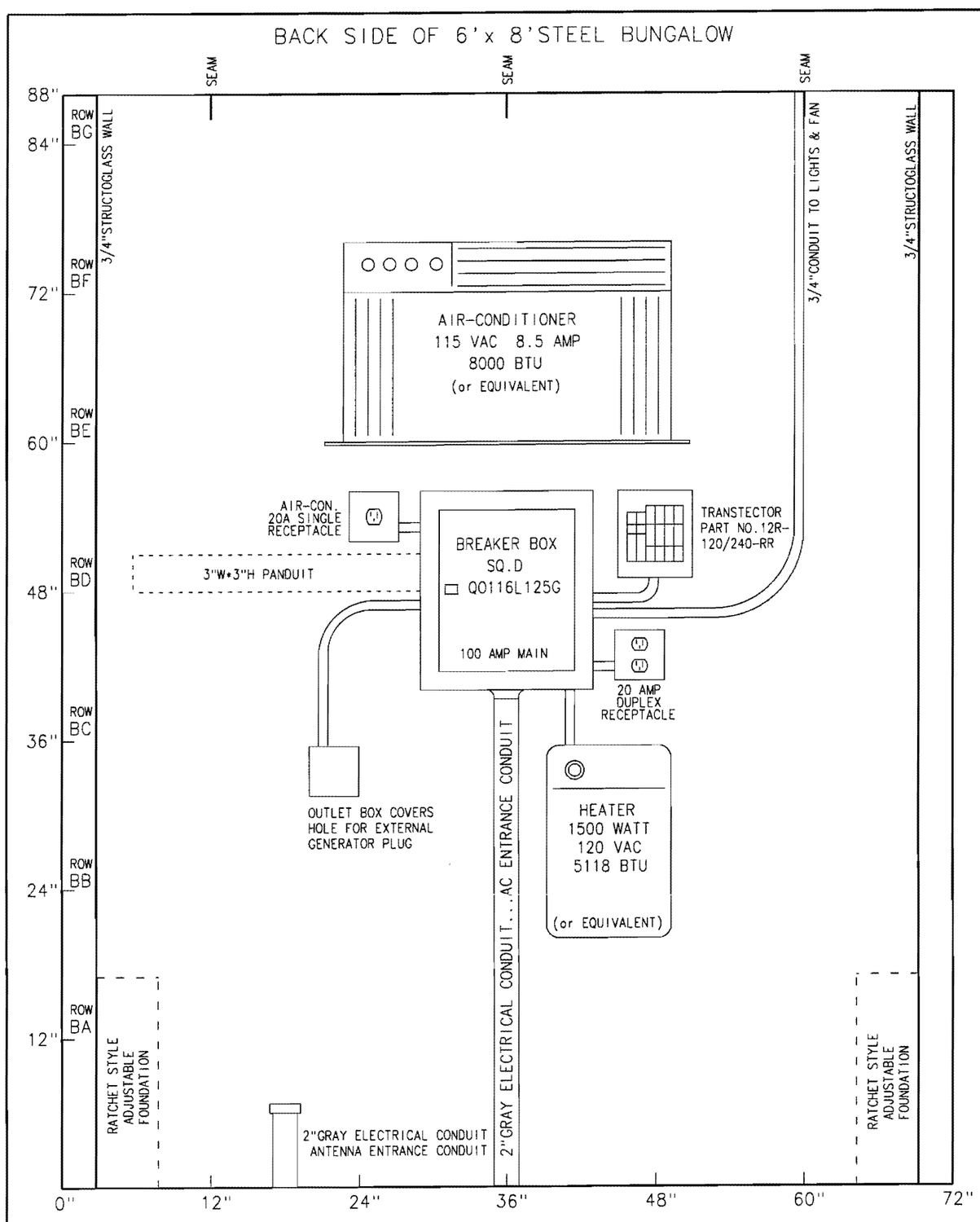

REVISION BLOCK

KANSAS CITY SOUTHERN LINES SIGNAL DEPT.

DWG. NO. SD-33-2-046.99X

LOCATION JEFFERSON STREET
KANE, IL

FILE SD-33-5-046.99
DOT NO. 294-579K
MILE POST 046.99

TOP VIEW OF 6'x 8' STEEL BUNGALOW

LEFT SIDE

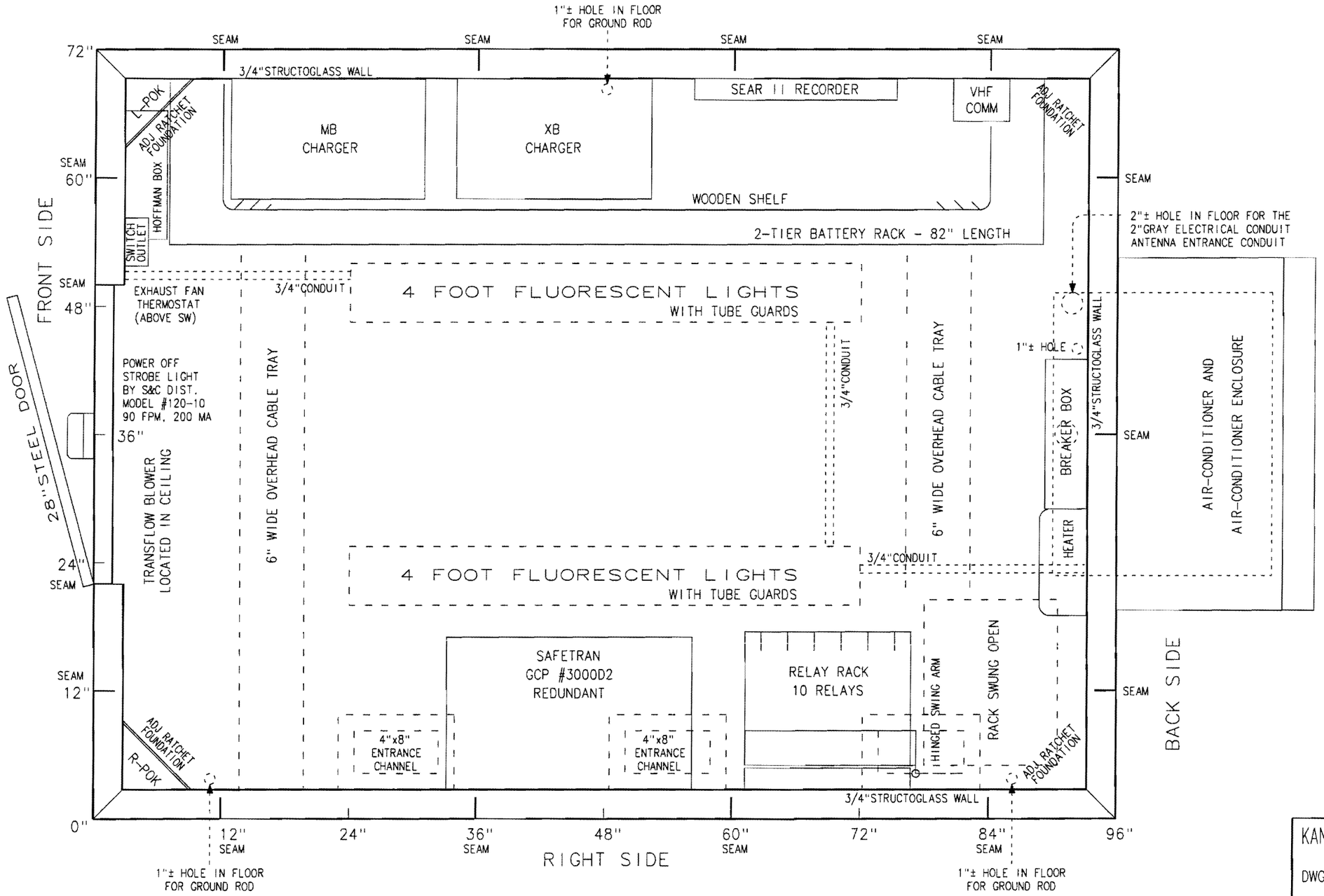

REVISION BLOCK	

KANSAS CITY SOUTHERN LINES SIGNAL DEPT.

DWG. NO. SD-33-2-046.99Y

LOCATION JEFFERSON STREET
KANE, IL

FILE SD-33-5-046.99
DOT NO. 294-579K
MILE POST 046.99