Minimum Program Steps Report

Location and SIN

DOT Number: 174939A
Milepost Number: 19.26
Site Name: LOMBARD,ILLINOIS

SIN: 762010010016 *

* Parameter is part of office check number calculation.

MCF and Template Selection

MCF Name: GCP-T6X-02-1.mcf
MCF Revision: 021
MCFCRC: 6076E435

Template = 1A:6 Trk Bi *

* Parameter is part of office check number calculation.

Minimum Program Steps

TEMPLATE: module configuration
Track 2/RIO 1 Slot = RIO *

TEMPLATE: preemption
Preempt Logic = Simult *

TEMPLATE: track 1-Bi, Island
Track 1 : GCP Frequency = 968 Hz
Track 1 : Approach Distance = 1101 ft
Track 1 : Prime Warning Time = 38 sec
Track 1 : GCP Transmit Level = High
Track 1 : Isl Frequency = 20.2 kHz

TEMPLATE: AND 1 XR
AND 1 Enable Used = Yes *

TEMPLATE: SSCC
SSCC 1 : Lamp Neutral Test = Off (Set in Field)
SSCC 2 : Lamp Neutral Test = Off (Set in Field)

TEMPLATE: OOS
OOS Control = OOS IPs *

TEMPLATE: OP assignment 1
OUT 1.2 = AND 1 XR *

TEMPLATE: IP assignment 1
IN 1.1 = AND 1 XR Enable *
IN 1.2 = Out Of Service IP 1 *
IN 2.1 = AND 1 XR Enable *
IN 2.2 = AND 1 XR Enable *
IN 2.3 = Preempt Health *

TEMPLATE: IP assignment SSCC
IN 7.1 = AND 1 XR Enable *

GCP: track 1
Track 1 : GCP Freq Category = Offset *
Track 1 : Island Distance = 185 ft *

GCP: track 1 enhanced det
Track 1 : Adv Appr Predn = Yes *
Track 1 : Adv Appr Predn Time = 64 sec *
Track 1 : Adv Appr Predn Strt EZ = 73 *
Track 1 : Adv Appr Predn Stop EZ = 43 *

GCP: track 1 prime
Track 1 : Pickup Delay Mode = Auto *

* Parameter is part of office check number calculation.

Check Numbers

Office Check No. (DT 4.6.0): 326E5242
Office Check Number: 326E5242
Config. Check Number: 007FE26F
(Based on MCF Revision 021)

Parameters not part of office check number calculation:

Track 1 : GCP Frequency = 968 Hz
Track 1 : Approach Distance = 1101 ft
Track 1 : Prime Warning Time = 38 sec
Track 1 : GCP Transmit Level = High
Track 1 : Isl Frequency = 20.2 kHz
SSCC 1 : Lamp Neutral Test = Off (Set in Field)
SSCC 2 : Lamp Neutral Test = Off (Set in Field)

Comments

<none>

Configuration Package File

Filename: GEN1926 174939A A.pac
Path: H:\02-Way\up08234-(PhaseIV)\GCP Programs\12-01-09 changes\M.P. 19.26\
Date/Time: 2/10/2010 11:35:35

NEW SHEET

Designed: 12-01-09
INSTALL HALF BLOCK SYSTEM FROM LOMBARD TO VILLA PARK, ILLINOIS
PHASE 1 PART 4
(MP: 20.41 TO MP: 18.24)
Rec*: WO*: 88113
IS: /MWK
/ /CTC/MDF

NOTE: Actual OFFSET and ISLAND distances must be verified by field personnel.

UNION PACIFIC
QUALITY PRODUCTIVITY SAFETY
SIGNAL DESIGN

Date:	12-01-09
Des:	CTC
Chk:	MWK
AFE:	88113

UNION PACIFIC RAILROAD
LOMBARD, ILLINOIS
GRACE STREET
GENEVA SUBDIVISION
Office of Sr AVP Engineering - Signal/TCO Omaha, Nebraska

Sh.:	3A
DOT	174939A
MP:	19.26
ID:	GEN1926.3AX

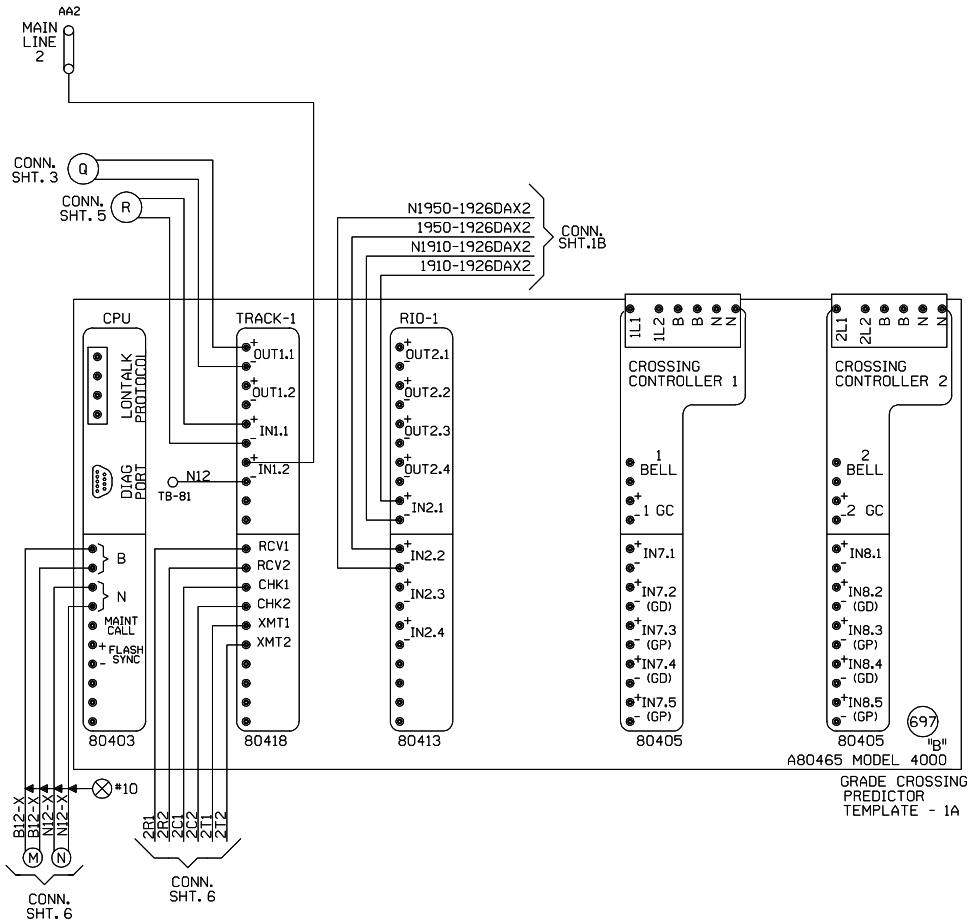

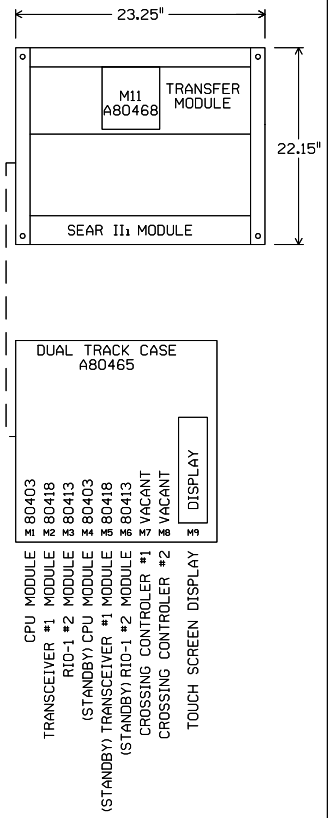

"Mf" FREQUENCY (HZ)	MAXIMUM TRANSMIT WIRE LENGTH (FEET)
86	100
114	125
156	150
211	200
285-970	250

NOTE:
EACH TRANSMITTER TO RAIL WIRE FROM XMT1 AND XMT2 MUST NOT EXCEED THE MAXIMUM LENGTH SPECIFIED IN THE TABLE SHOWN. THE RECEIVER WIRE LENGTH IS NOT CRITICAL. DOES NOT APPLY TO 6 TRACK WIRE APPLICATION.

NEW SHEET

Designed: 12-01-09
INSTALL HALF BLOCK SYSTEM FROM LOMBARD TO VILLA PARK, ILLINOIS PHASE 1 PART 4 (MP. 20.41 TO MP. 18.24)
Rec#: WO#: 88113
IS: MWK
/ /CTC/MDF

MODIFICATION LEVEL	
Q.A. LAST LEVEL CHECKED	DR
LAST LEVEL MOD THIS TYPICAL	DR
LAST LEVEL BY DESIGNER	DR
CHANGED FROM TYPICAL?	Y

MY 02.01.09 4K 2TKGF.3

UNION PACIFIC
QUALITY PRODUCTIVITY SAFETY
SIGNAL DESIGN

Date: 12-01-09
Des: CTC
Chk: MWK
AFE: 88113

UNION PACIFIC RAILROAD
LOMBARD, ILLINOIS
GRACE STREET
GENEVA SUBDIVISION
Office of Sr AVP Engineering - Signal/TCO Omaha, Nebraska

Sh.: 4
DOT 174939A
MP: 19.26
ID: GEN1926.4X

Minimum Program Steps Report

Location and SIN

DOT Number: 174939A
Milepost Number: 19.26
Site Name: LOMBARD,ILLINOIS

SIN: 762010010016 *

* Parameter is part of office check number calculation.

MCF and Template Selection

MCF Name: GCP-T6X-02-1.mcf
MCF Revision: 021
MCFCRC: 6076E435

Template = 1A:6 Trk Bi *

* Parameter is part of office check number calculation.

Minimum Program Steps

TEMPLATE: module configuration
Track 2/RIO 1 Slot = RIO *
SSCC 1 Slot = Not Used *
SSCC 2 Slot = Not Used *

TEMPLATE: track 1-Bi, Island
Track 1 : GCP Frequency = 970 Hz
Track 1 : Approach Distance = 1101 ft
Track 1 : Prime Warning Time = 38 sec
Track 1 : Prime UAX = IP *
Track 1 : Prime UAX Pickup = 15 sec *
Track 1 : GCP Transmit Level = High
Track 1 : Isl Frequency = 15.2 kHz

TEMPLATE: AND 1 XR
AND 1 Enable Used = Yes *

TEMPLATE: OOS
OOS Control = OOS IPs *

TEMPLATE: OP assignment 1
OUT 1.1 = AND 1 XR *

TEMPLATE: IP assignment 1
IN 1.1 = AND 1 XR Enable *
IN 1.2 = Out Of Service IP 1 *
IN 2.1 = T1 Prime UAX *
IN 2.2 = T1 Prime UAX *

GCP: track 1
Track 1 : Island Distance = 185 ft *

* Parameter is part of office check number calculation.

Check Numbers

Office Check No. (DT 4.6.0): 3F667C09
Office Check Number: 3F667C09
Config. Check Number: 29F44C5B
(Based on MCF Revision 021)

Parameters not part of office check number calculation:

Track 1 : GCP Frequency = 970 Hz
Track 1 : Approach Distance = 1101 ft
Track 1 : Prime Warning Time = 38 sec
Track 1 : GCP Transmit Level = High
Track 1 : Isl Frequency = 15.2 kHz

Comments

<none>

Configuration Package File

Filename: GEN1926_174939A_B.pac
Path: H:\02-Way\up08234-(PhaseIV)\GCP Programs\12-01-09 changes\M.P. 19.26\
Date/Time: 2/10/2010 11:36:54

NEW SHEET

Designed: 12-01-09
INSTALL HALF BLOCK SYSTEM FROM LOMBARD TO VILLA PARK, ILLINOIS
PHASE 1 PART 4
(MP. 20.41 TO MP. 18.24)
Rec*: WO*: 88113
IS: /MWK
/ /CTC/MDF

NOTE: Actual OFFSET and ISLAND distances must be verified by field personnel.

UNION PACIFIC
QUALITY PRODUCTIVITY SAFETY
SIGNAL DESIGN

Date:	12-01-09
Des:	CTC
Chk:	MWK
AFE:	88113

UNION PACIFIC RAILROAD
LOMBARD, ILLINOIS
GRACE STREET
GENEVA SUBDIVISION
Office of Sr AVP Engineering - Signal/TCO Omaha, Nebraska

Sh.:	4A
DOT	174939A
MP:	19.26
ID:	GEN1926.4AX

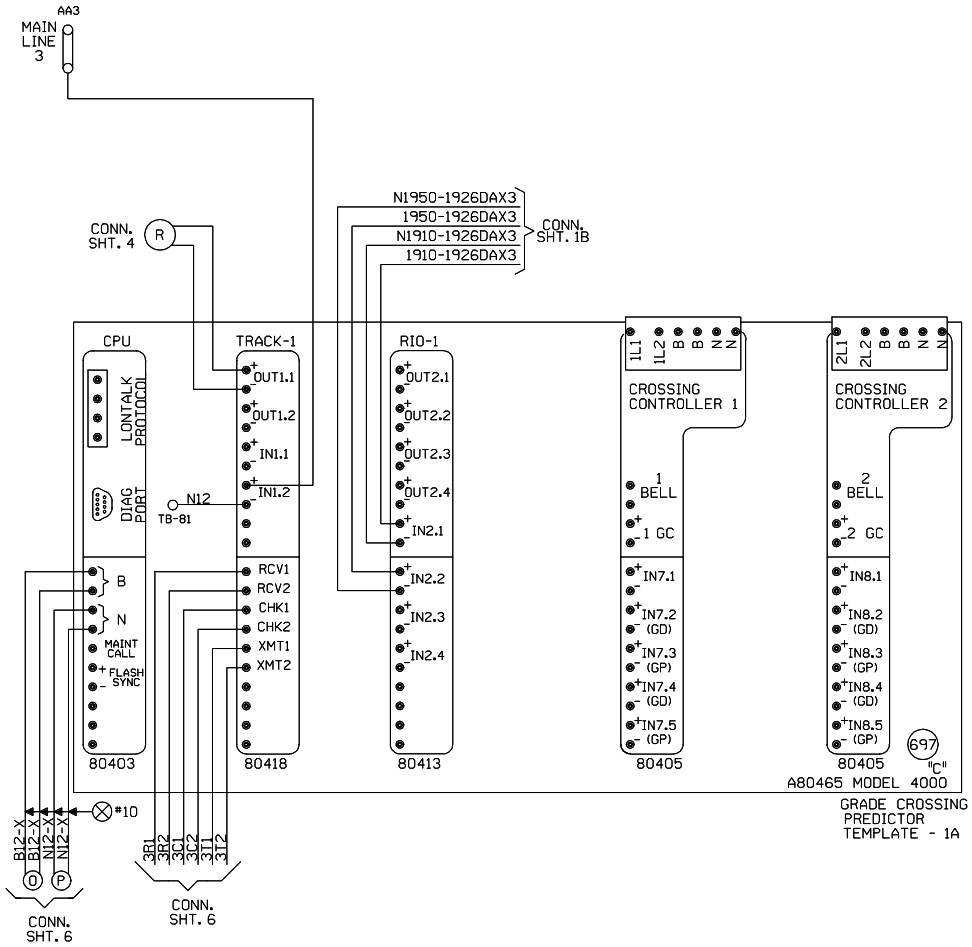

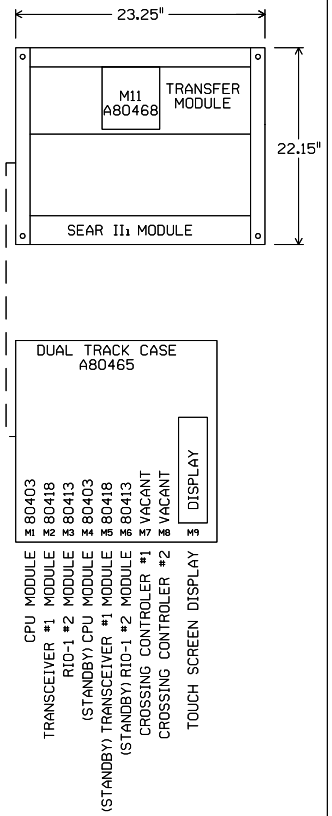

"Mf" FREQUENCY (HZ)	MAXIMUM TRANSMIT WIRE LENGTH (FEET)
86	100
114	125
156	150
211	200
285-970	250

NOTE:
EACH TRANSMITTER TO RAIL WIRE FROM XMT1 AND XMT2 MUST NOT EXCEED THE MAXIMUM LENGTH SPECIFIED IN THE TABLE SHOWN. THE RECEIVER WIRE LENGTH IS NOT CRITICAL. DOES NOT APPLY TO 6 TRACK WIRE APPLICATION.

NEW SHEET

Designed: 12-01-09
INSTALL HALF BLOCK SYSTEM FROM LOMBARD TO VILLA PARK, ILLINOIS PHASE 1 PART 4 (MP. 20.41 TO MP. 18.24)
Rec#: WO#: 88113
IS: MWK
/ /CTC/MDF

MODIFICATION LEVEL	
Q. A. LAST LEVEL CHECKED	DR
LAST LEVEL MOD THIS TYPICAL	DR
LAST LEVEL BY DESIGNER	DR
CHANGED FROM TYPICAL?	Y

MY 02.01.09 4K 2TKGF.3

UNION PACIFIC
QUALITY PRODUCTIVITY SAFETY
SIGNAL DESIGN

Date: 12-01-09
Des: CTC
Chk: MWK
AFE: 88113

UNION PACIFIC RAILROAD
LOMBARD, ILLINOIS
GRACE STREET
GENEVA SUBDIVISION
Office of Sr AVP Engineering - Signal/TCO Omaha, Nebraska

Sh.: 5
DOT 174939A
MP: 19.26
ID: GEN1926.5X

Minimum Program Steps Report

Location and SIN

DOT Number: 174939A
Milepost Number: 19.26
Site Name: LOMBARD,ILLINOIS

SIN: 762010010016 *

* Parameter is part of office check number calculation.

MCF and Template Selection

MCF Name: GCP-T6X-02-1.mcf
MCF Revision: 021
MCFCRC: 6076E435

Template = 1A:6 Trk Bi *

* Parameter is part of office check number calculation.

Minimum Program Steps

TEMPLATE: module configuration
Track 2/RIO 1 Slot = RIO *
SSCC 1 Slot = Not Used *
SSCC 2 Slot = Not Used *

TEMPLATE: track 1-Bi, Island
Track 1 : GCP Frequency = 972 Hz
Track 1 : Approach Distance = 1101 ft
Track 1 : Prime Warning Time = 38 sec
Track 1 : GCP Transmit Level = High
Track 1 : Isl Frequency = 13.2 kHz

TEMPLATE: AND 1 XR
AND 1 Enable Used = Yes *

TEMPLATE: OOS
OOS Control = OOS IPs *

TEMPLATE: OP assignment 1
OUT 1.1 = AND 1 XR *

TEMPLATE: IP assignment 1
IN 1.2 = Out Of Service IP 1 *
IN 2.1 = AND 1 XR Enable *
IN 2.2 = AND 1 XR Enable *

GCP: track 1
Track 1 : GCP Freq Category = Offset *
Track 1 : Island Distance = 185 ft *

* Parameter is part of office check number calculation.

Check Numbers

Office Check No. (DT 4.6.0): 1CE6D147
Office Check Number: 1CE6D147
Config. Check Number: 080C9E13
(Based on MCF Revision 021)

Parameters not part of office check number calculation:

Track 1 : GCP Frequency = 972 Hz
Track 1 : Approach Distance = 1101 ft
Track 1 : Prime Warning Time = 38 sec
Track 1 : GCP Transmit Level = High
Track 1 : Isl Frequency = 13.2 kHz

Comments

<none>

Configuration Package File

Filename: GEN1926_174939A_C.pac
Path: H:\02-Way\up08234-(PhaseIV)\GCP Programs\12-01-09 changes\M.P. 19.26\
Date/Time: 2/10/2010 11:38:15

NEW SHEET

Designed: 12-01-09
INSTALL HALF BLOCK SYSTEM FROM LOMBARD TO VILLA PARK, ILLINOIS
PHASE 1 PART 4
(MP. 20.41 TO MP. 18.24)
Rec*: WO*: 88113
IS: /MWK
/ /CTC/MDF

NOTE: Actual OFFSET and ISLAND distances must be verified by field personnel.

UNION PACIFIC
QUALITY PRODUCTIVITY SAFETY
SIGNAL DESIGN

Date:	12-01-09
Des:	CTC
Chk:	MWK
AFE:	88113

UNION PACIFIC RAILROAD
LOMBARD, ILLINOIS
GRACE STREET
GENEVA SUBDIVISION
Office of Sr AVP Engineering - Signal/TCO Omaha, Nebraska

Sh.:	5A
DOT	174939A
MP:	19.26
ID:	GEN1926.5AX

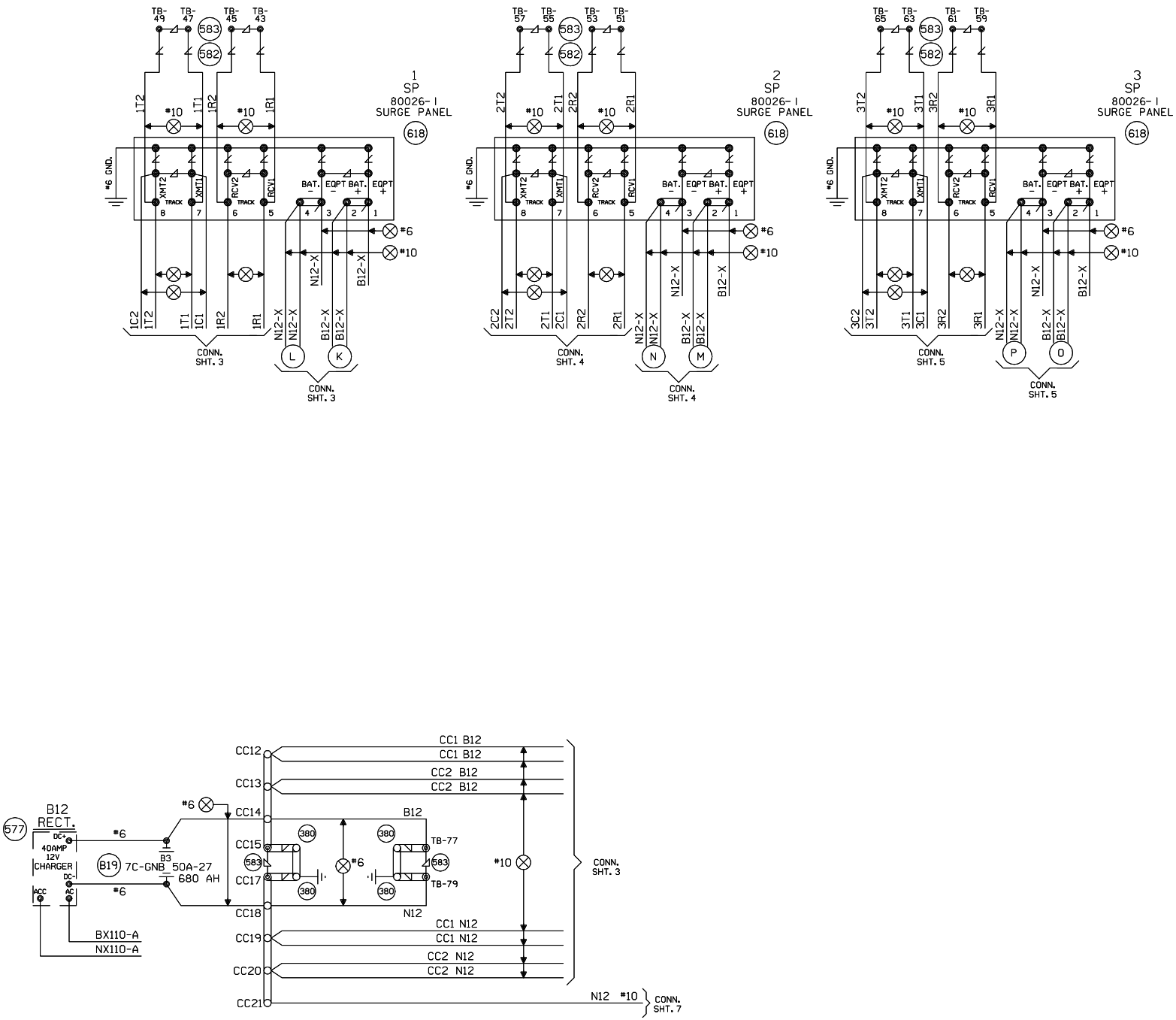

NEW SHEET

Designed: 12-01-09 INSTALL HALF BLOCK SYSTEM FROM LOMBARD TO VILLA PARK, ILLINOIS PHASE 1 PART 4 (MP. 20.41 TO MP. 18.24) Rec#: WO#: 88113 IS: MWK / CTC/MDF	MODIFICATION LEVEL		UNION PACIFIC QUALITY PRODUCTIVITY SAFETY SIGNAL DESIGN	Date: 12-01-09	UNION PACIFIC RAILROAD	Sh.: 6
	Q. A. LAST LEVEL CHECKED	DR		Des: CTC	LOMBARD, ILLINOIS	DOT 174939A
	LAST LEVEL MOD THIS TYPICAL	DR		Chk: MWK	GRACE STREET	MP: 19.26
	LAST LEVEL BY DESIGNER	DR		AFE: 88113	GENEVA SUBDIVISION	ID: GEN1926.6X
	CHANGED FROM TYPICAL? REV 02.01.09 4K 4TKSPGFC.4	Y			Office of Sr AVP Engineering - Signal/TCO Omaha, Nebraska	

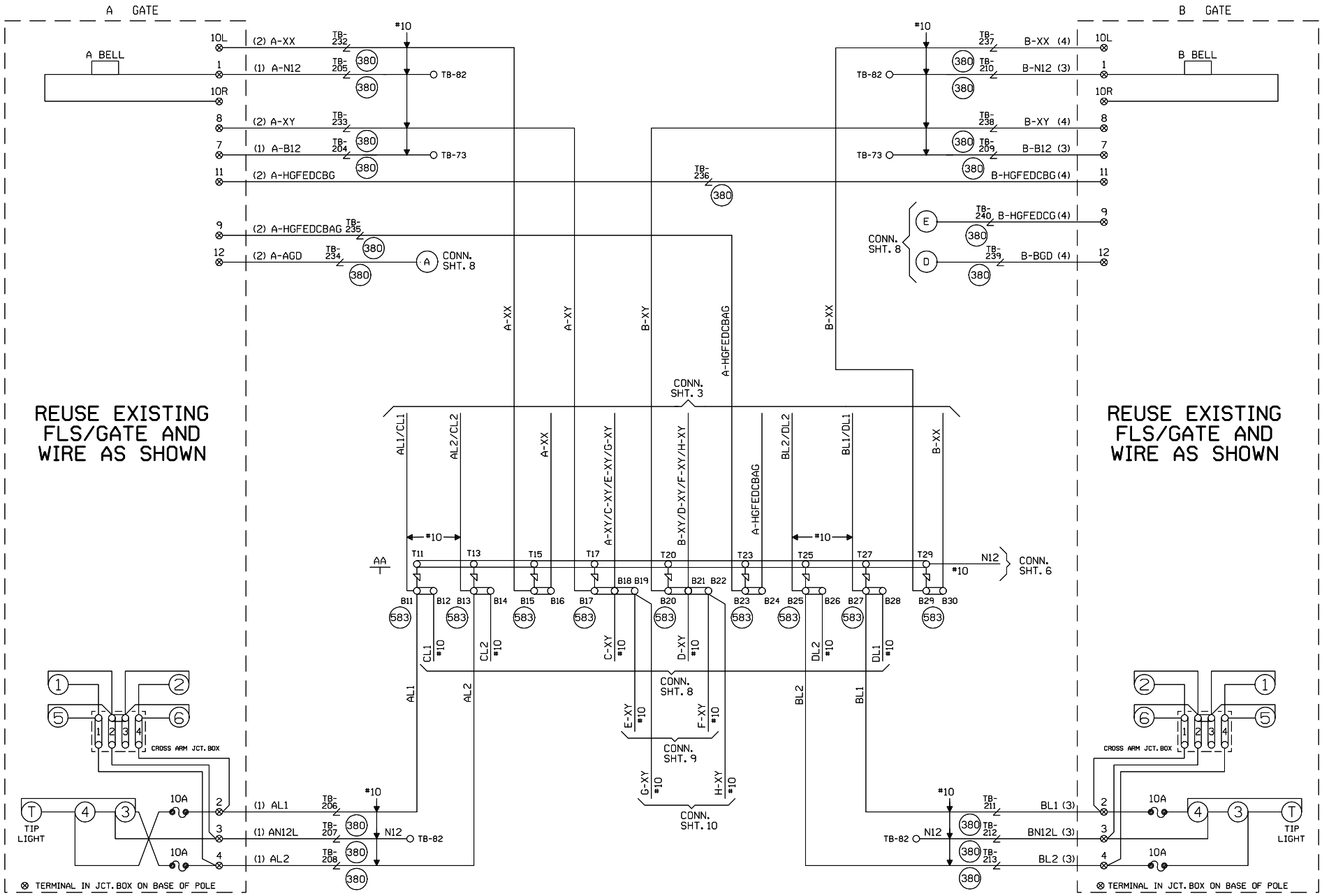

CABLE TABULATION

CABLE NO. 1 5C. NO.6 U.G.B.T.
CABLE NO. 2 7C. NO.14 U.G.B.T.
CABLE NO. 3 5C. NO.6 U.G.B.T.
CABLE NO. 4 7C. NO.14 U.G.B.T.

NEW SHEET

Designed: 12-01-09
INSTALL HALF BLOCK SYSTEM FROM LOMBARD TO VILLA PARK, ILLINOIS PHASE 1 PART 4 (MP. 20.41 TO MP. 18.24)
Rec#: WO#: 88113
IS: MWK
/ /CTC/MDF

MODIFICATION LEVEL	
Q. A. LAST LEVEL CHECKED	DR
LAST LEVEL MOD THIS TYPICAL	DR
LAST LEVEL BY DESIGNER	DR
CHANGED FROM TYPICAL?	Y

REV 02.01.09 4K 4GFTYP.5

UNION PACIFIC
QUALITY PRODUCTIVITY SAFETY
SIGNAL DESIGN

Date:	12-01-09
Des:	CTC
Chk:	MWK
AFE:	88113

UNION PACIFIC RAILROAD

LOMBARD, ILLINOIS
GRACE STREET
GENEVA SUBDIVISION

Office of Sr AVP Engineering - Signal/TCO Omaha, Nebraska

Sh.:	7
DOT	174939A
MP:	19.26
ID:	GEN1926.7X