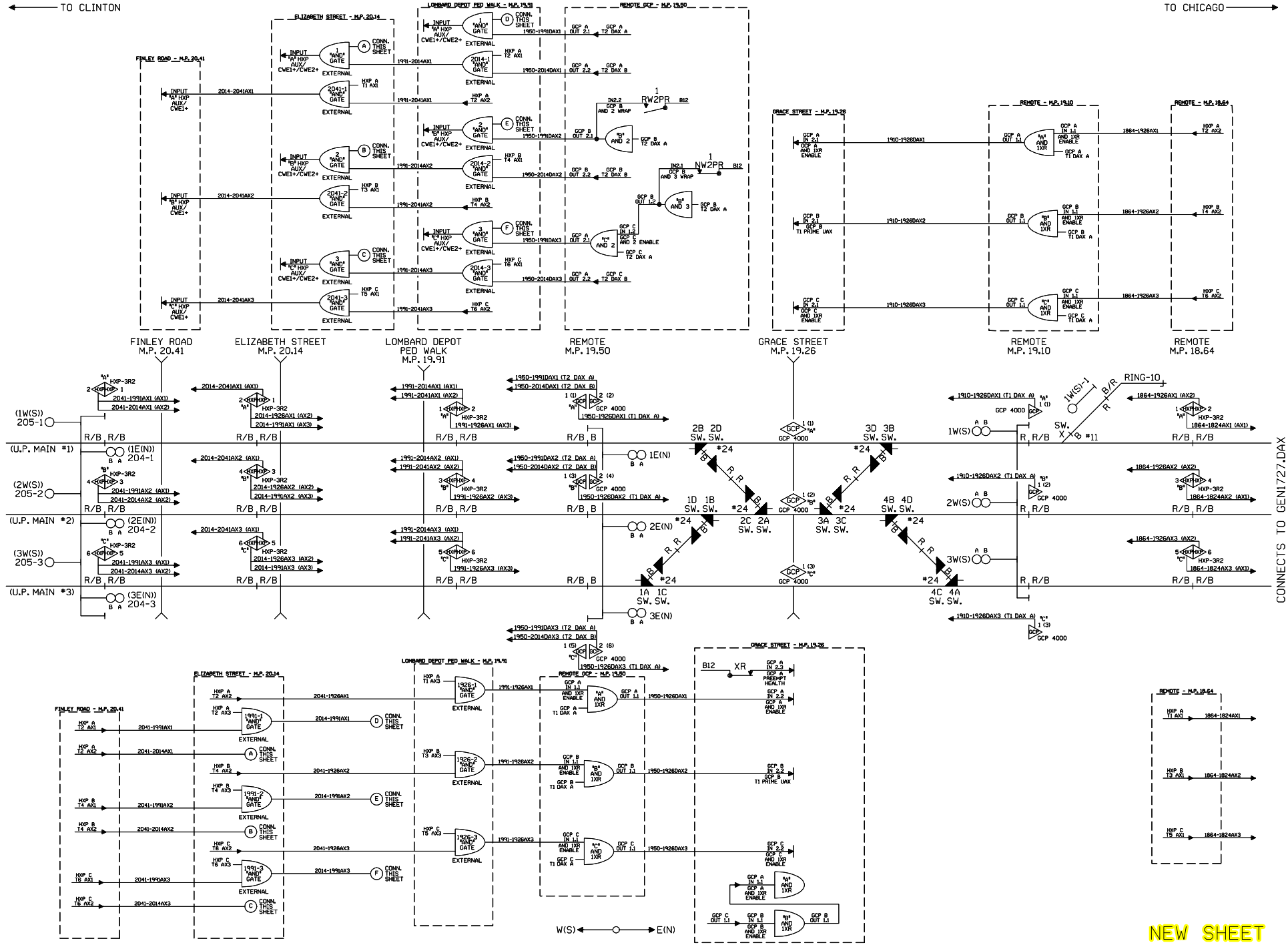

Designed: 12-01-09
INSTALL HALF BLOCK SYSTEM FROM LOMBARD TO VILLA PARK, ILLINOIS PHASE 1 PART 4 (MP. 20.41 TO MP. 18.24)
Rec#: WO#: 88113
IS: MWK / CTC/MDF

UNION PACIFIC
QUALITY PRODUCTIVITY SAFETY
SIGNAL DESIGN

Date:	12-01-09
Des:	CTC
Chk:	MWK
AFE:	88113

UNION PACIFIC RAILROAD

DAX CHART
LOMBARD, ILLINOIS
GENEVA SUBDIVISION

Office of Sr AVP Engineering - Signal/TCO Omaha, Nebraska

Sh.:	DAX
From M.P.	20.41
To MP:	18.64
ID:	GEN1926.DAX

(REV. 01.01.05) (4KDAXLAYOUT)

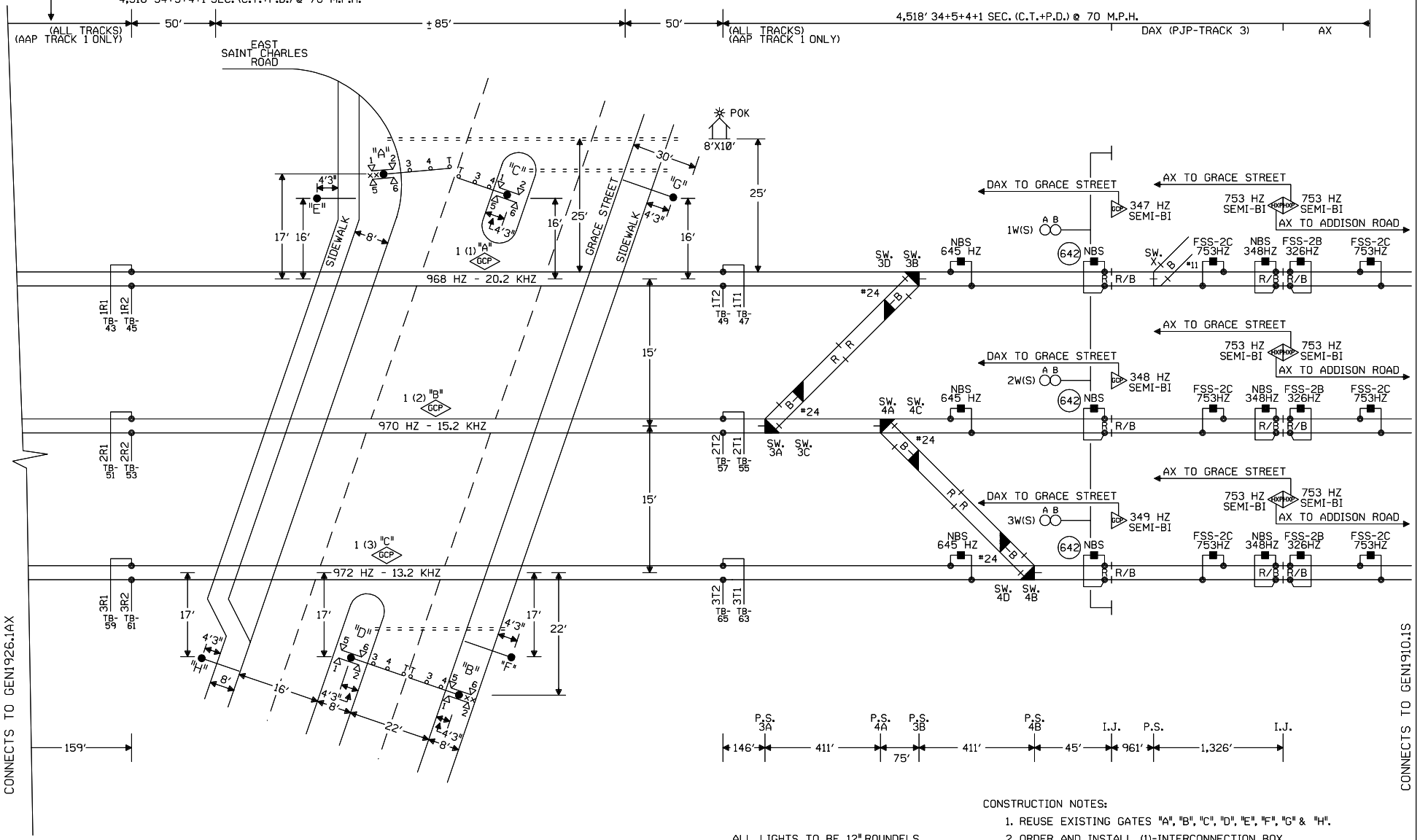

CONSTRUCTION NOTES:

1. REUSE EXISTING GATES "A", "B", "C", "D", "E", "F", "G" & "H".
2. ORDER AND INSTALL (1)-INTERCONNECTION BOX (TAB 199) FOR NEW 8'X10' CROSSING HOUSE.
3. REUSE EXISTING CRTU AND ANTENNA FROM EXISTING GRACE STREET XING HOUSE - M.P. 19.26.

ALL LIGHTS TO BE 12" ROUNDELS.

= = = = = = 4" X 200' CONDUIT
LIGHTS: LED LIGHTS
GATES A,C: 23'6"
GATES B,D: 13'10"
GATE E: 10'
GATE F: 11'2"
GATE G: 10'11"
GATE H: 10'2"
CRTU = MICROBURST

EXISTING

xx = BELL

W(S) ← → E(N)

NOTES:

⊗ = TWISTED WIRES
INSULATED 1 TWIST PER FT.
ALL TRACK WIRES 2C. #6

TRANSMITTER AND RECEIVER LEADS TO BE SEPARATED BY AT LEAST 12" IN TRENCH, LENGTHS SHOULD NOT EXCEED MANUFACTURER'S RECOMMENDATION.

TOP OF FOUNDATION TO BE AT SAME ELEVATION AS THE SURFACE OF THE TRAVELED WAY & NO MORE THAN 4" ABOVE THE SURFACE OF THE GROUND.

ALL BUNGALOW WIRING TO BE #16 AWG FLEX UNLESS OTHERWISE SPECIFIED EXCEPT ALL GROUND WIRE TO BE #6 AWG FLEX OR LARGER.

ALL WIRING IN GATE MECHANISM TO BE #10 "AWG FLEX".

REFER TO UP STANDARD DWG FOR BUNGALOW GROUNDING.

PORTABLE GENERATOR EXTENSION CORD FOR 240V TO 240V IS PROVIDED AS WELL AS A 120V TO 240V ADAPTER.

NEW SHEET

Designed: 12-01-09
INSTALL HALF BLOCK SYSTEM FROM LOMBARD TO VILLA PARK, ILLINOIS
PHASE 1 PART 4
(MP. 20.41 TO MP. 18.24)
Rec#: WO#: 88113
IS: MWK
/ /CTC/MDF

MODIFICATION LEVEL	
Q. A. LAST LEVEL CHECKED	DR
LAST LEVEL MOD THIS TYPICAL	DR
LAST LEVEL BY DESIGNER	DR
CHANGED FROM TYPICAL?	Y

REV 02.01.09 4K 4GTYP.1

UNION PACIFIC
QUALITY PRODUCTIVITY SAFETY
SIGNAL DESIGN

Date:	12-01-09
Des:	CTC
Chk:	MWK
AFE:	88113

UNION PACIFIC RAILROAD

LOMBARD, ILLINOIS
GRACE STREET
GENEVA SUBDIVISION

Office of Sr AVP Engineering - Signal/TCO Omaha, Nebraska

Sh.:	1
DOT	174939A
MP:	19.26
ID:	GEN1926.1X

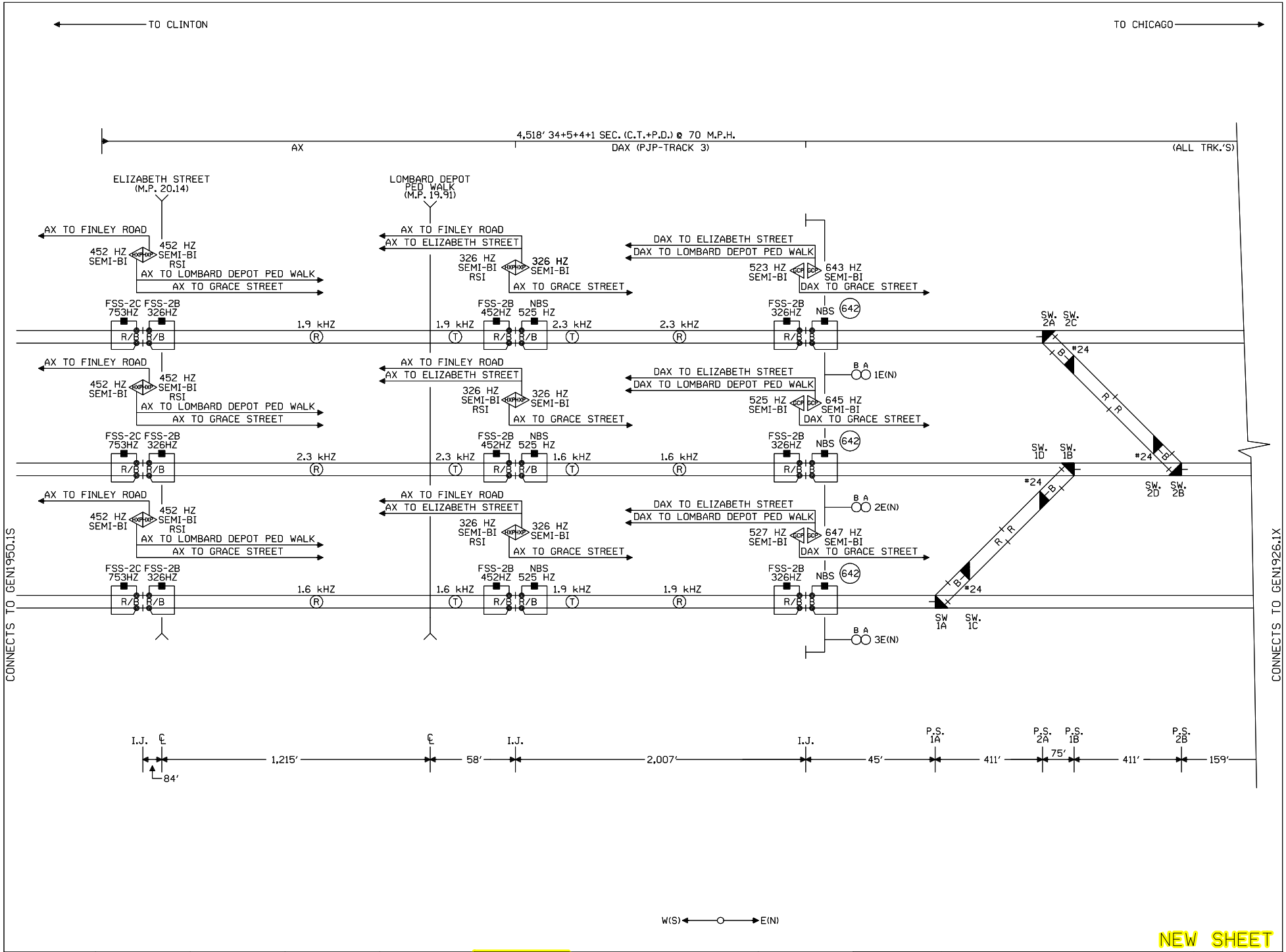

NEW SHEET

Designed: 12-01-09
INSTALL HALF BLOCK SYSTEM FROM LOMBARD TO VILLA PARK, ILLINOIS PHASE 1 PART 4 (MP. 20.41 TO MP. 18.24)
Rec#: WO#: 88113
IS: MWK
/ /CTC/MDF

MODIFICATION LEVEL	
Q. A. LAST LEVEL CHECKED	DR
LAST LEVEL MOD THIS TYPICAL	DR
LAST LEVEL BY DESIGNER	DR
CHANGED FROM TYPICAL?	Y

REV 02.01.09 4K 4GTYP.1

UNION PACIFIC
QUALITY PRODUCTIVITY SAFETY
SIGNAL DESIGN

Date:	12-01-09
Des:	CTC
Chk:	MWK
AFE:	88113

UNION PACIFIC RAILROAD

LOMBARD, ILLINOIS
GRACE STREET
GENEVA SUBDIVISION

Office of Sr AVP Engineering - Signal/TCO Omaha, Nebraska

Sh.:	1A
DOT	174939A
MP:	19.26
ID:	GEN1926.1AX

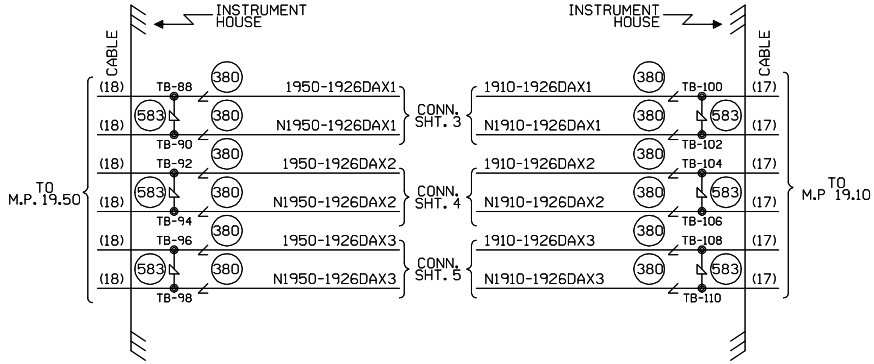

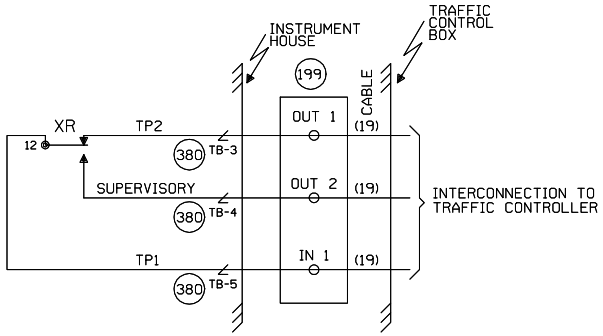

CABLE TABULATION

CABLE NO. 17 7C.NO.14 U.G.B.T. HOUSE TO M.P. 19.10.
CABLE NO. 18 7C.NO.14 U.G.B.T. HOUSE TO M.P. 19.50.
CABLE NO. 19 HOUSE INTERCONNECTION TO TRAFFIC CONTROLLER.

NEW SHEET

Designed: 12-01-09
INSTALL HALF BLOCK SYSTEM FROM LOMBARD TO VILLA PARK, ILLINOIS PHASE 1 PART 4 (MP. 20.41 TO MP. 18.24)
Rec#: WO#: 88113
IS: MWK / CTC/MDF

UNION PACIFIC
QUALITY PRODUCTIVITY SAFETY
SIGNAL DESIGN

Date:	12-01-09
Des:	CTC
Chk:	MWK
AFE:	88113

UNION PACIFIC RAILROAD

LOMBARD, ILLINOIS
GRACE STREET
GENEVA SUBDIVISION

Office of Sr AVP Engineering - Signal/TCO Omaha, Nebraska

Sh.:	1B
DOT	174939A
MP:	19.26
ID:	GEN1926.1BX

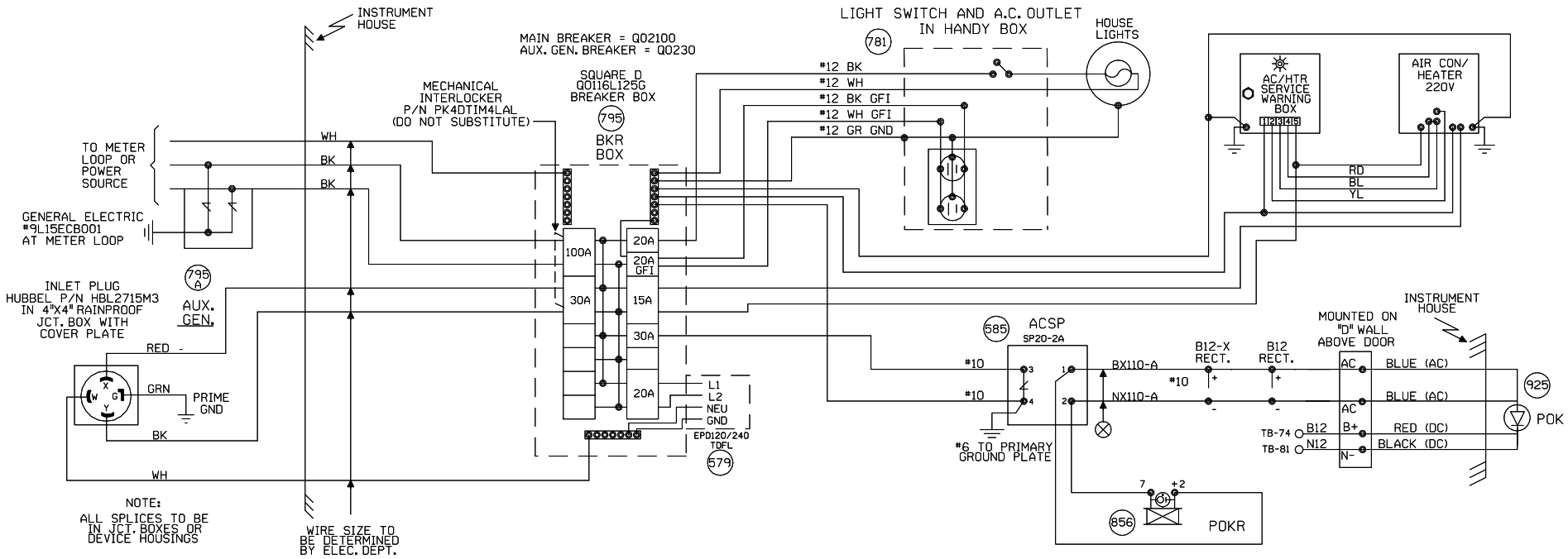
INSTRUMENT HOUSE
MAIN BREAKER = Q02100
AUX. GEN. BREAKER = Q0230
LIGHT SWITCH AND A.C. OUTLET IN HANDY BOX
781
HOUSE LIGHTS
#12 BK
#12 WH
#12 BK GFI
#12 WH GFI
#12 GR GND
MECHANICAL INTERLOCKER P/N PK4DTIM4LAL (DO NOT SUBSTITUTE)
SQUARE D Q0116L125G BREAKER BOX
795
BKR BOX
AC/HTR SERVICE WARNING BOX
AIR CON/ HEATER 220V
RD
BL
YL
TO METER LOOP OR POWER SOURCE
WH
BK
BK
GENERAL ELECTRIC #9L15ECB001 AT METER LOOP
100A
30A
20A
20A GFI
15A
30A
20A
L1
L2
NEU
GND
EPD120/240 TDFL
579
795 A
AUX. GEN.
INLET PLUG HUBBEL P/N HBL2715M3 IN 4"X4" RAINPROOF JCT. BOX WITH COVER PLATE
RED
GRN
PRIME GND
BK
WH
585
ACSP
SP20-2A
#10
#10
BX110-A
NX110-A
#6 TO PRIMARY GROUND PLATE
B12-X RECT.
B12 RECT.
#10
INSTRUMENT HOUSE
MOUNTED ON "D" WALL ABOVE DOOR
AC
AC
B+
N-
BLUE (AC)
BLUE (AC)
RED (DC)
BLACK (DC)
TB-74 B12
TB-81 N12
925
POK
7
+2
856
POKR
NOTE:
ALL SPLICES TO BE IN JCT. BOXES OR DEVICE HOUSINGS
WIRE SIZE TO BE DETERMINED BY ELEC. DEPT.

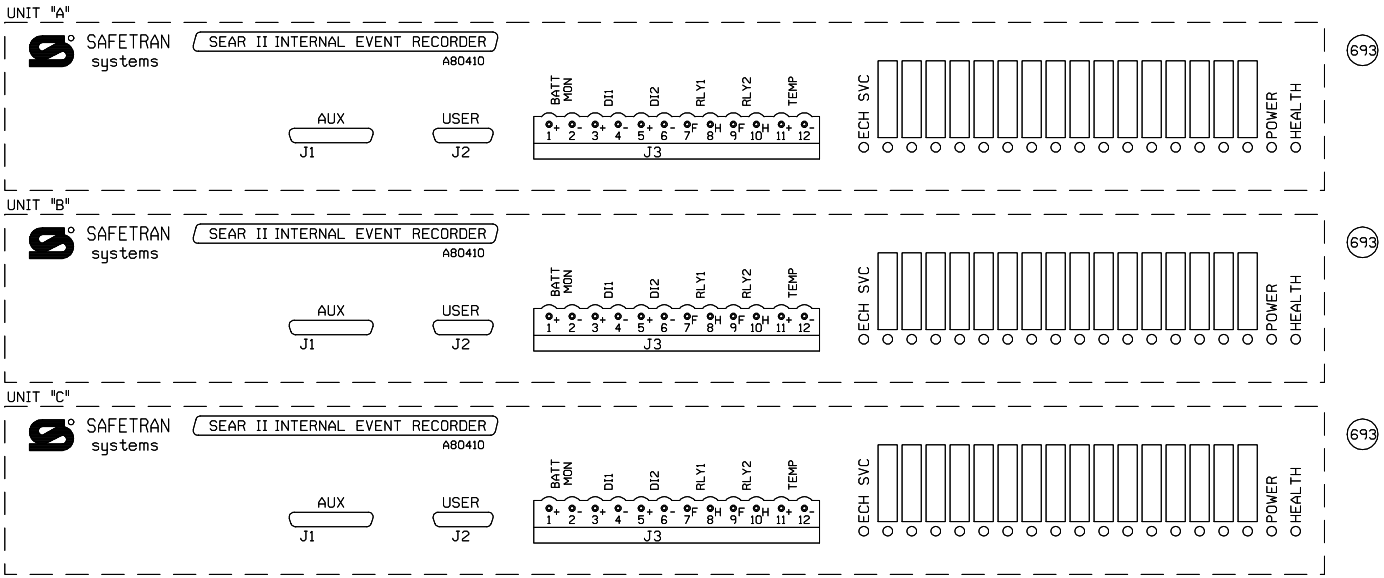
UNIT "A"
SAFETRAN systems
SEAR II INTERNAL EVENT RECORDER
A80410
AUX
J1
USER
J2
BATT MON
DI1
DI2
RLY1
RLY2
TEMP
J3
ECH SVC
POWER
HEALTH
693
UNIT "B"
SAFETRAN systems
SEAR II INTERNAL EVENT RECORDER
A80410
AUX
J1
USER
J2
J3
693
UNIT "C"
SAFETRAN systems
SEAR II INTERNAL EVENT RECORDER
A80410
AUX
J1
USER
J2
J3
693

NEW SHEET

| | | |

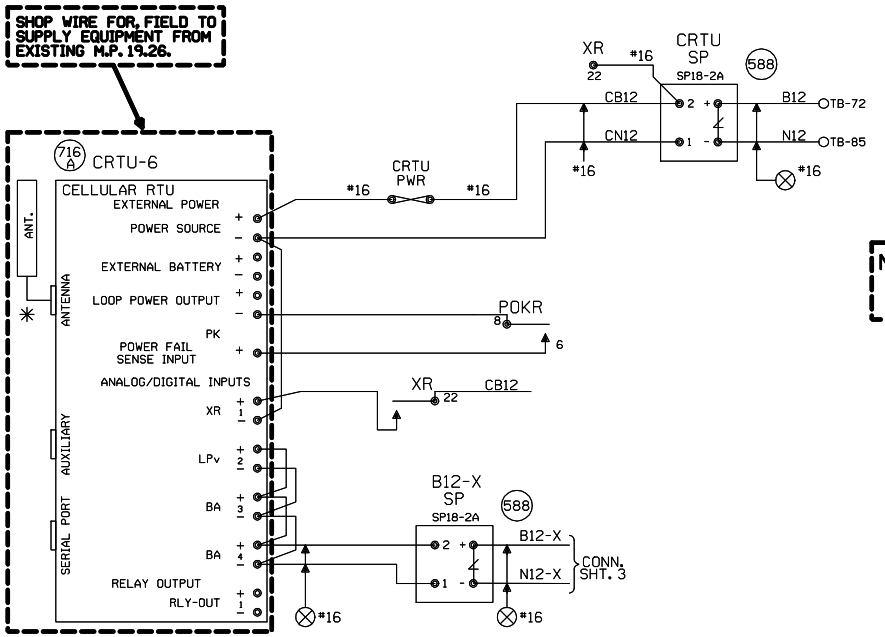

NOTE: REUSE EXISTING CRTU FROM RETIRED GRACE STREET XING BUNGALOW.

NOTES:

ALL DIODES 1N5060 OR 1N4004 UNLESS OTHERWISE NOTED.

✳ MOUNT ANTENNA ON TOP OF HOUSE.

ALL WIRES #18 UNLESS OTHERWISE NOTED.

ALL UNUSED 'NC' INPUTS MUST BE TIED HIGH TO BATTERY

ALL UNUSED ANALOG INPUTS MUST BE TIED HIGH TO BATTERY

ALL UNUSED 'NO' INPUTS MUST BE DISCONNECTED

NORMAL STATE FOR ANALOG CHANNELS IS EQUAL TO THE STORED NOMINAL VOLTAGE +120% OR -81%

CRTU FRONT PANEL DISPLAY CHART INDICATES NORMAL STATE

DIGITAL INPUT HIGH, OR POWER FAIL INPUT CLOSED — DIGITAL INPUT LOW, OR POWER FAIL INPUT OPEN

L — LATCH IS SET BECAUSE CRTU DETECTED AN ALARM CONDITION

12.06V L

'sRUN MODE' — 'sRUN MODE-SILENT' — CRTU RADIO IS DISABLED. REPROGRAM CRTU WITH LAPTOP.

UNIT INSTALLATION AND SETUP

R.R. SITE ID WHERE; SSSS = 4 CHARACTER SUBDIVISION ID. FILL WITH PRECEDING ZEROS AS REQUIRED. THE MAIN TRACK SUBDIVISION ID* IS IN THE CURRENT TIMETABLE. INDUSTRIAL LEADS, LEASED, AND LEAD TRACKS LISTED WITHIN THE SUBDIVISION MAY HAVE THEIR OWN UNIQUE SUBDIVISION ID*. DO NOT AUTOMATICALLY USE THE MAIN TRACK SUBDIVISION ID* FOR THESE OTHER TRACKS. ALWAYS DOUBLE CHECK WITH THE MOST CURRENT PRINTED COPY OF THE TIMETABLE.
LLLLLLLL = 8 CHARACTERS USE DOT* AT CROSSINGS, AND USE MP* AT WAYSIDE AND HBD SITES. FILL WITH PRECEDING DASHES AS REQUIRED.
THE MP* MUST USE A DECIMAL POINT TO SEPARATE NUMBERS.
AA = 2 CHARACTER STATE NAME FOR CROSSINGS.
AA = 'WD' FOR WAYSIDE LOCATIONS, AA = 'HB' FOR HBD SITES.
MUST BE 14 CHARACTERS LONG, NO SPACES ALLOWED.

SITE IDENTIFIER: SSSSLLLLLLLLAA	0001-174939AIL
SIGNAL STRENGTH dBm	
CARRIER ID	
FIRMWARE VERSION	2.3.06
SERIAL NUMBER	
CONFIGURATION NET	MICROBURST
SIGNAL STATUS	
SCADANET STATUS	
SILENCE INTERVAL	60 MINUTES
HEALTHCHECK INTERVAL	EVERY 2 DAYS
ALARM DEFER DELAY	240 MINUTES (4 HOURS)
OPERATION TO RESUME:	RUN
CALIBRATION CONSTANT	
CH2	
CH3	
CH4	
POWER SOURCE	

FIELD PROVIDES: SAMPLED NOMINAL VOLTAGES, SCADANET STATUS CALIBRATION CONSTANTS, SERIAL NUMBER, AND SIGNAL STATUS.

CHANNEL SETUP - STANDARD CONFIGURATION 17:XR,LPv,BA,BA

CHANNEL NORMAL STATE	SENSE (NO/NC)	NAME FUNCTION	RECOGNITION DELAY SECONDS ACTIVE	RECOGNITION DELAY SECONDS NORMAL	RETURN TO NORMAL	REPORTING MODE	ALARM LINKED CHANNEL	ALARM LINKED CRITERIA	EVENT LOGGING ENABLED OPTIONS
POWER FAIL (CH5) ■	POWER FAIL DETECT NO	PFin-PK AC POWER FAIL	7,200 ALARM	300 NORMAL	ENABLED	ALERT	DISABLED	N/A	
CH1 □ ■	DIGITAL INPUT NO	CH1-XR XR DOWN TO LONG	1,800 ALARM	1 NORMAL	ENABLED	ALERT	DISABLED	N/A	ANALOG VALUE SENT
CH2 STORED NOMINAL VOLTAGE	ANALOG INPUT N/A	CH2-LP/V GATES NOT UP/DOWN LIGHT OUT BATTERY LOW	300 ALARM	300 NORMAL	DISABLED	ALERT W/UPDATE	DISABLED	N/A	
CH3 STORED NOMINAL VOLTAGE	ANALOG INPUT N/A	CH3-BA/V BATTERY MONITOR BATTERY LOW	300 ALARM	300 NORMAL	DISABLED	ALERT W/UPDATE	DISABLED	N/A	DIGITAL EVENTS
CH4 STORED NOMINAL VOLTAGE	ANALOG INPUT N/A	CH4-BA/V BATTERY MONITOR BATTERY LOW	300 ALARM	300 NORMAL	DISABLED	ALERT W/UPDATE	DISABLED	N/A	PFin-PK CH1-XR
POWER SOURCE (CH6)	ANALOG INPUT N/A	PS-BA/V BATTERY MONITOR BATTERY LOW	300 ALARM	300 NORMAL	DISABLED	ALERT W/UPDATE	DISABLED	N/A	

ANALOG CHANNEL	USEFUL RANGE VOLTS LOW	USEFUL RANGE VOLTS HIGH	DISPLAYED RANGE VOLTS LOW	DISPLAYED RANGE VOLTS HIGH	RELATIVE ALARM POINT LOW	RELATIVE ALARM POINT HIGH	ABSOLUTE ALARM POINT LOW	ABSOLUTE ALARM POINT HIGH	AUTOMATIC UPDATE INTERVAL	STORED NOMINAL VOLTAGE	SAMPLED NOMINAL VOLTAGE
CH2	0.0	30.00	0.0	30.00	81%	120%	10.0	28.0	10 DAYS	12.69	
CH3	0.0	30.00	0.0	30.00	81%	120%	10.0	28.0	10 DAYS	12.69	
CH4	0.0	30.00	0.0	30.00	81%	120%	10.0	28.0	10 DAYS	12.69	
POWER SOURCE	0.0	30.00	0.0	30.00	81%	120%	10.0	28.0	10 DAYS	12.69	
RELAY OUTPUT	NAME RLY-OUT		ACTIVE SET-UP-OPEN		NORMAL CLR-DN-CLOSE		PULSE DURATION		15 SECONDS	CHARTS REV'D 3-2-01	

MAINTENANCE OPERATIONS

TO START OR ABORT ANY PROCEDURE

1. PRESS THE 'CANCEL' BUTTON FIRST

WHEN RESPONDING TO A CALL, PUT THE CRTU IN THE 'SILENCE ALARMS' MODE

1. PRESS 'SELECT' AND THEN '+ ARROW' BUTTON UNTIL
   DISPLAY: ACTION? SILENCE ALARMS
2. PRESS THE 'SELECT' BUTTON TWICE
3. CORRECT PROBLEM AND SIMULATE NORMAL TRAIN MOVEMENT THROUGH THE LOCATION
4. EXAMINE EACH CHANNEL ON THE CRTU
5. PRESS THE '+/- ARROW' BUTTON VERIFY ALL CHANNELS INDICATE A NORMAL STATE NORMAL STATES ARE ON THE CHANNEL SETUP CHART

CLEAR TIMERS, LATCHES AND SEND ALL NORMAL

1. DO STEPS #1 - #5 ABOVE, AND PRESS 'CANCEL'.
2. PRESS 'SELECT' AND THEN '- ARROW' BUTTON UNTIL
   DISPLAY: ACTION? SERVICE MODE
3. PRESS 'SELECT' AGAIN TO RESET TIMERS, AND IF
   DISPLAY: SERVICE MODE ALL NORMAL
4. PRESS 'SELECT' AGAIN TO CLEAR LATCHES, AND SEND ALL NORMAL. SKIP STEPS #5-#6.
5. HOWEVER, IF ALARMS ARE NOT CLEARED;
   DISPLAY: SERVICE MODE ALARMS PENDING/PRESENT
6. PRESS 'CANCEL', CORRECT PROBLEM AND REPEAT STEPS #2 THRU #5 UNTIL ALL NORMAL SENT.

TO CANCEL THE 'SILENCE ALARMS' MODE

1. PRESS 'SELECT' AND THEN '+ ARROW' BUTTON UNTIL
   DISPLAY: ACTION? CANCEL SILENCE
2. PRESS THE 'SELECT' BUTTON AGAIN

EXAMINE & SET BATTERY VOLTAGE NOMINAL VALUE

1. PRESS THE '+ ARROW' OR '- ARROW' BUTTON UNTIL THE DESIRED CHANNEL IS DISPLAYED.
   DISPLAY: PS-BA: 13.83V NORMAL
2. VERIFY THE DISPLAYED READING WITH A DIGITAL VOLTMETER
3. PRESS THE 'SELECT' BUTTON, AND THE CRTU DISPLAY WILL SWITCH BETWEEN CURRENT/SAVED NOMINAL VOLTAGE VALUES.
   DISPLAY: NOMINAL ON #6? (CURRENT) 13.83
   DISPLAY: SAVED NOMINAL 6 (STORED) 12.69
4. PRESS THE 'SELECT' BUTTON AND THE CURRENT OR 'NOMINAL ON' VALUE WILL BE SAMPLED AND STORED AS THE 'SAVED NOMINAL' VALUE
5. VERIFY THE 'NOMINAL ON' AND 'SAVED NOMINAL' VALUES ARE EQUIVALENT, REPEAT STEPS #1 THRU #3 & PRESS THE 'CANCEL' BUTTON.

NEW SHEET

Designed: 12-01-09
INSTALL HALF BLOCK SYSTEM FROM LOMBARD TO VILLA PARK, ILLINOIS
PHASE 1 PART 4
(MP. 20.41 TO MP. 18.24)
Rec*: WO*: 88113
IS: MWK
/ /CTC/MDF

UNION PACIFIC — QUALITY PRODUCTIVITY SAFETY — SIGNAL DESIGN

Date:	12-01-09
Des:	CTC
Chk:	MWK
AFE:	88113

UNION PACIFIC RAILROAD

LOMBARD, ILLINOIS
GRACE STREET
GENEVA SUBDIVISION

Office of Sr AVP Engineering - Signal/TCO Omaha, Nebraska

Sh.:	2A
DOT	174939A
MP:	19.26
ID:	GEN1926.2AX

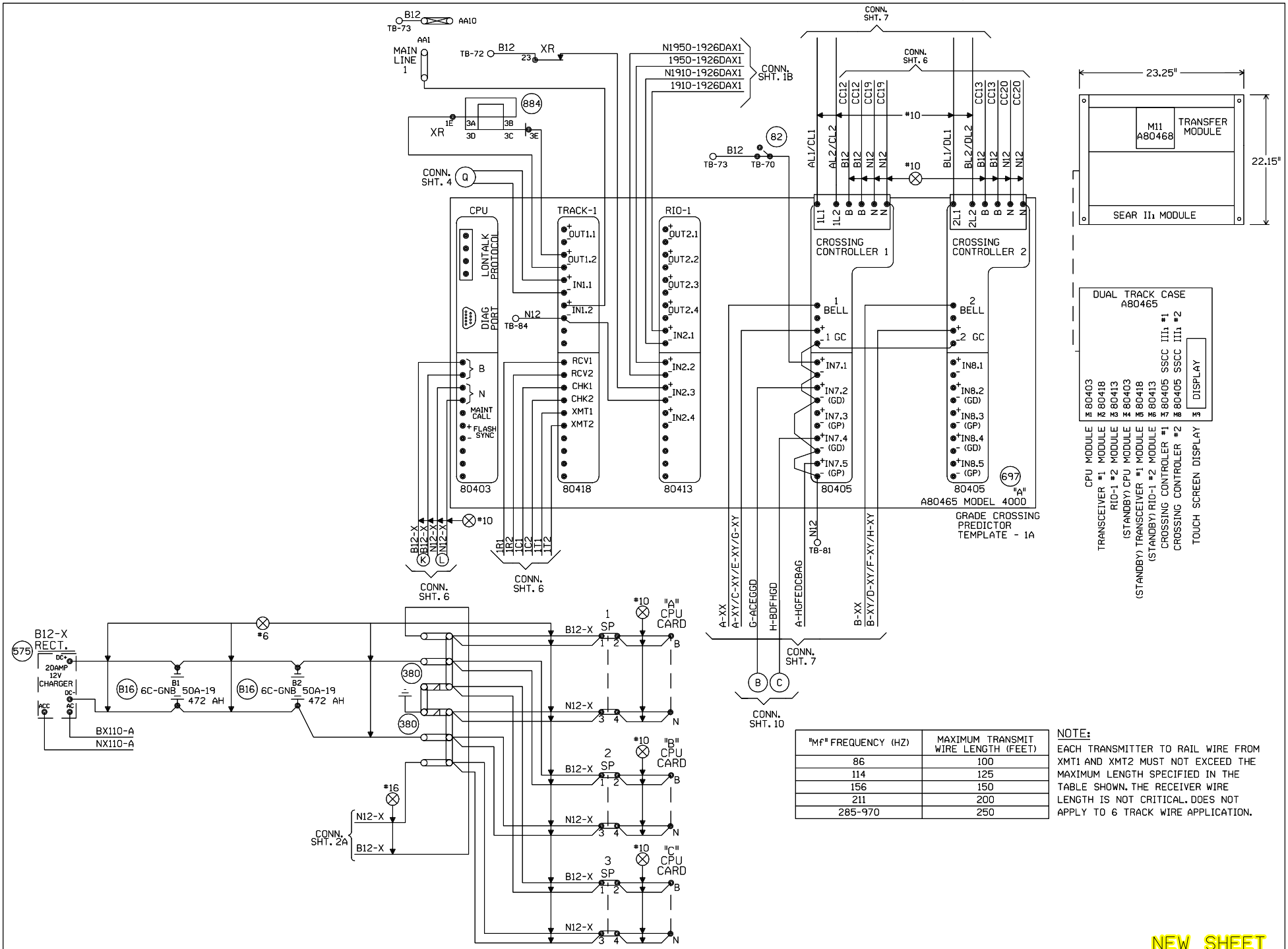

"Mf" FREQUENCY (HZ)	MAXIMUM TRANSMIT WIRE LENGTH (FEET)
86	100
114	125
156	150
211	200
285-970	250

NOTE:
EACH TRANSMITTER TO RAIL WIRE FROM XMT1 AND XMT2 MUST NOT EXCEED THE MAXIMUM LENGTH SPECIFIED IN THE TABLE SHOWN. THE RECEIVER WIRE LENGTH IS NOT CRITICAL. DOES NOT APPLY TO 6 TRACK WIRE APPLICATION.

NEW SHEET

Designed: 12-01-09
INSTALL HALF BLOCK SYSTEM FROM LOMBARD TO VILLA PARK, ILLINOIS PHASE 1 PART 4 (MP. 20.41 TO MP. 18.24)
Rec#: WO#: 88113
ISs: MWK
/ /CTC/MDF

MODIFICATION LEVEL	
Q.A. LAST LEVEL CHECKED	DR
LAST LEVEL MOD THIS TYPICAL	DR
LAST LEVEL BY DESIGNER	DR
CHANGED FROM TYPICAL?	Y

MV 02.01.09 4K 2TKGF.3

UNION PACIFIC
QUALITY PRODUCTIVITY SAFETY
SIGNAL DESIGN

Date:	12-01-09
Des:	CTC
Chk:	MWK
AFE:	88113

UNION PACIFIC RAILROAD

LOMBARD, ILLINOIS
GRACE STREET
GENEVA SUBDIVISION

Office of Sr AVP Engineering - Signal/TCO Omaha, Nebraska

Sh.:	3
DOT	174939A
MP:	19.26
ID:	GEN1926.3X