Typ: 010410 Chr Y

PLAN MUST NOT BE MODIFIED WITHOUT APPROVAL OF SIGNAL ENGINEERING

COPYRIGHT 2010 BNSF RAILWAY COMPANY. ALL RIGHTS RESERVED.

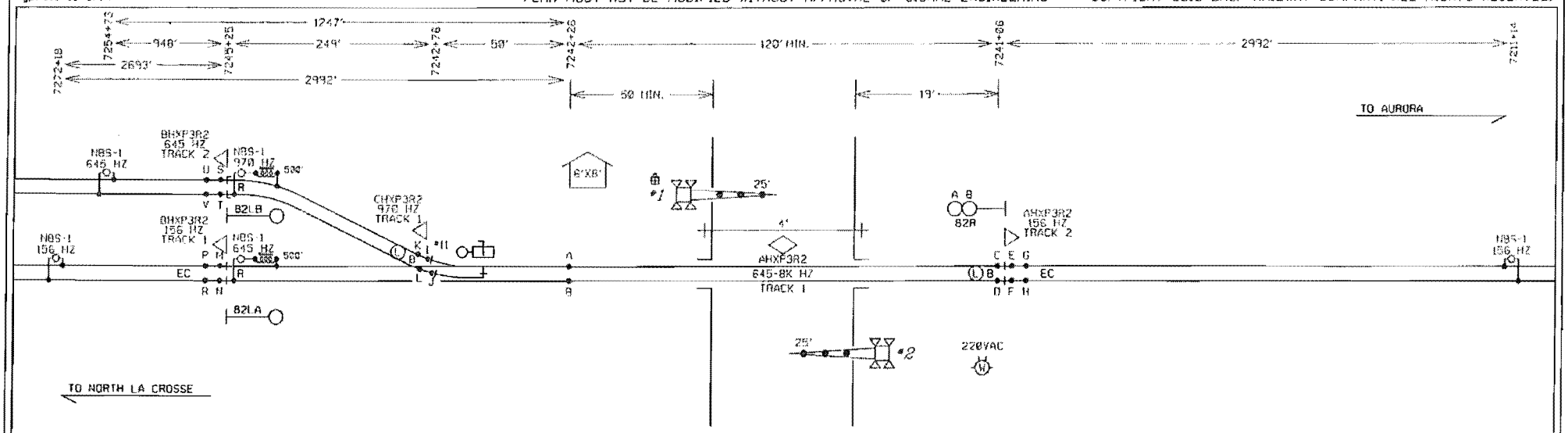

M.P. 137.15
AIRPORT ROAD
DOT # 069 895 R
℄ 7241+38

RECEIVED
MAY 10 2010
Illinois Commerce Commission
RAIL SAFETY SECTION

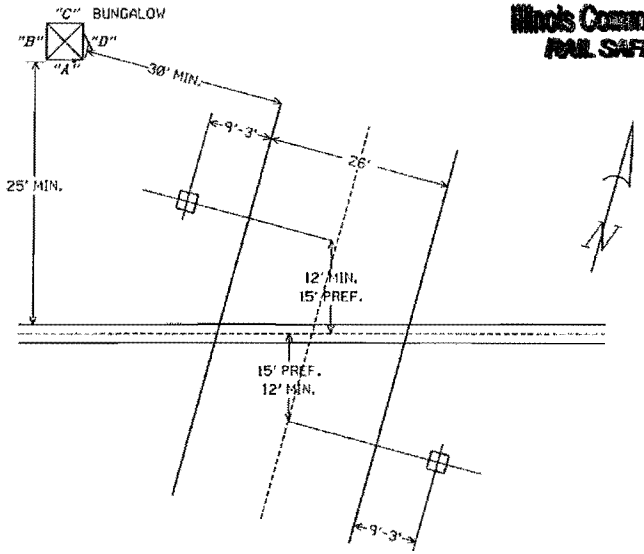

FOUNDATION PLACEMENT SKETCH
NOT TO SCALE

NOTES:
-TEST TERMINAL
-EQUALIZER
-LINE ARRESTER
-HEAVY DUTY ARRESTER
-TWISTED WIRE 2 TURNS PER FOOT
-CONNECTION TO REC./RTU

ALL WIRES #16 AWG UNLESS OTHERWISE NOTED

NOTES:

EQUIPMENT IS DESIGNED FOR 20 SECONDS MINIMUM WARNING TIME AT 60 MPH. (MAIN)
EQUIPMENT IS DESIGNED FOR 20 SECONDS MINIMUM WARNING TIME AT 25 MPH. (SIDING)
APPROACHES WERE LENGTHENED 10 SECONDS FOR SPEED VARIANCE AND BALLAST CHANGES (BT).
APPROACHES WERE LENGTHENED 4 SECONDS FOR EQUIPMENT RESPONSE TIME (ERT).
ALL LAMPS TO BE LED
GATE LENGTH SHOWN IS MEASURED FROM MAST C/L TO GATE TIP.

BURLINGTON NORTHERN SANTA FE RAILWAY

A-HXP-3R2 TRACK CIRCUITS
AIRPORT ROAD SAVANNA, IL

						DESIGNED 5-03-10 NEW XING AIRPORT ROAD XRL/JRE SEQ.# 42305	LS 0003	MP 137.15	SH 01 OF 17

0003137_15x01c_.dgn March 05, 2010

RED = IN YELLOW = OUT

TO 9-0144

PLAN MUST NOT BE MODIFIED WITHOUT APPROVAL OF SIGNAL ENGINEERING COPYRIGHT 2010 BNSF RAILWAY COMPANY. ALL RIGHTS RESERVED.

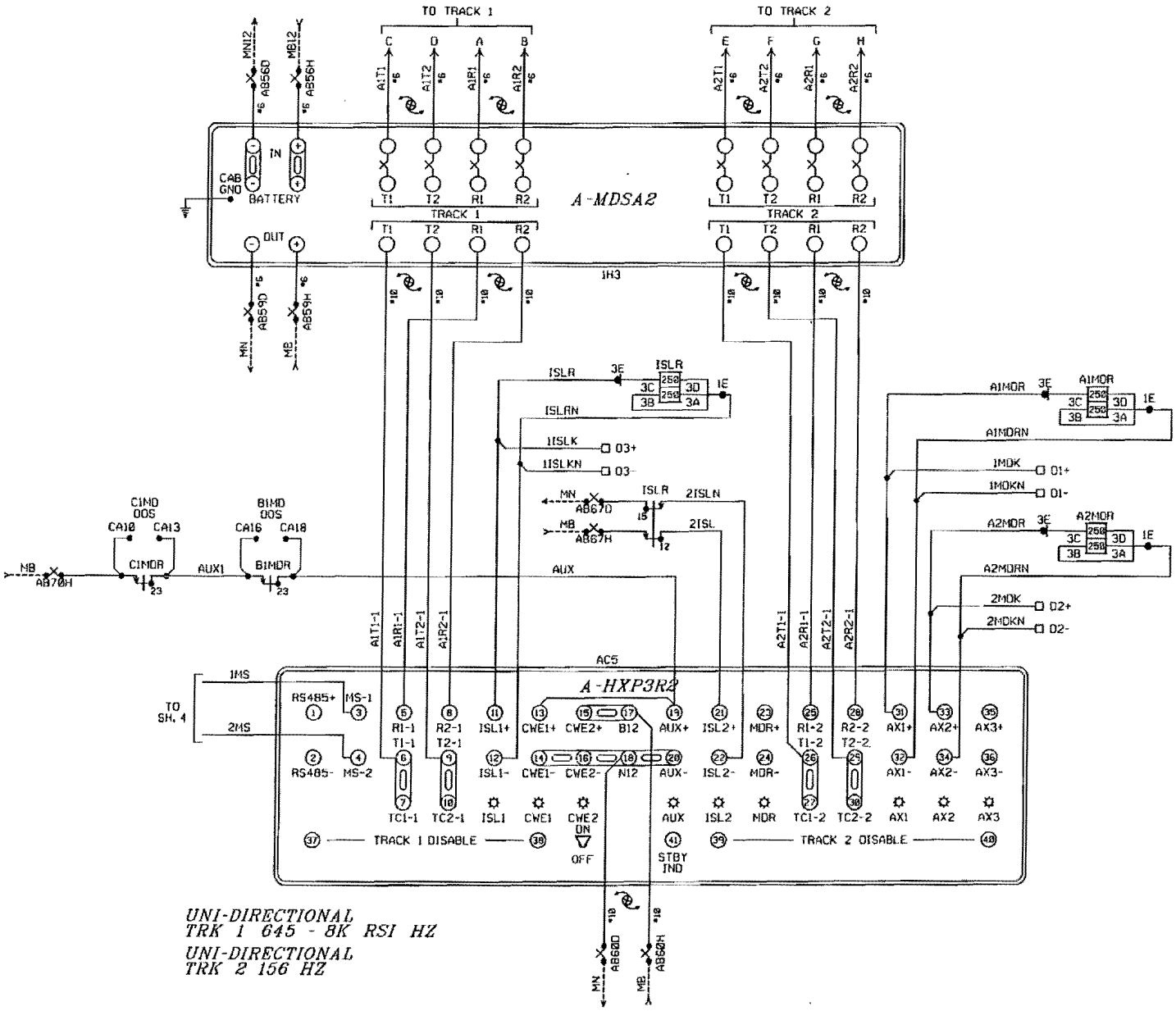

ALL NEW

BURLINGTON NORTHERN SANTA FE RAILWAY

A-HXP-3R2 TRACK CIRCUITS
AIRPORT ROAD SAVANNA, IL

DESIGNED 03-05-10
NEW JING AIRPORT ROAD
ARLYME SEC.# 42305

LS 0003 | MP 137.15 | SH 02 OF 17

0003137_15x02c..dgn March 05, 2010

PLAN MUST NOT BE MODIFIED WITHOUT APPROVAL OF SIGNAL ENGINEERING COPYRIGHT 2010 BNSF RAILWAY COMPANY. ALL RIGHTS RESERVED.

PROGRAM INFORMATION

PROGRAM VERSION 42.0 OR LATER

*=FIELD ADJUSTMENT TO BE MADE ACCORDING TO THE HXP-3 INSTRUCTION MANUAL 100052-001 ADO & SUPPLEMENTS.

HXP-3R2 ADJUST SELECT ADJUSTMENTS

NO.	ADJUSTMENT NAME	TRACK 1	TRACK 2
1	APPROACH LENGTH	2992'	299'
2	WARNING TIME	30 SEC.	30 SEC.
3	LIA	*	*
4	TC	*	*
5	MD RESTART	*	*

NOTE:

BEFORE PROGRAMMING ANY PARAMETERS/OPTIONS FOR THE HXP GO TO 'OPTION 49' AND RESET ALL LOCAL PARAMETERS TO FACTORY DEFAULT VALUES. SEE HXP-3 MANUAL 100052-001 ADO PAGE 4-14.

OPTION ADJUSTMENTS

NO.	ABBREVIATION	TRACK 1	TRACK 2
1	TK-ENA	'UP'	'UP'
2	TK FD	645 HZ	156 HZ
3	CW/MD	'C'	'C'
4	UNI-BI	'u' (UNI)	'u' (UNI)
5	NOS-C	* RX	* RX
		* FEET	* FEET
6	CWEWT	DL (80 SEC.)	DL (80 SEC.)
7	LOS	DL (16 SEC.)	DL (16 SEC.)
8	IJ-LOS	DL (5 SEC.)	DL (5 SEC.)
9	BC	*	*
10	P-COMP	*	*
11	AX1	SEE AX ADJ.	SEE AX ADJ.
12	AX2	SEE AX ADJ.	SEE AX ADJ.
13	AX3	SEE AX ADJ.	SEE AX ADJ.
17	MDR-AX/OF-TK	0'	0'
	CJ-LOS	DL (0)	DL (0)
	PJ-DET	DL (15 SEC.)	DL (15 SEC.)
	PJ-RX	DL (15)	DL (15)
18	MD-TMR	DL (10 MIN.)	DL (10 MIN.)
19	MIN-WT	DL (0)	DL (0)
20	FS-RX	DL (0)	DL (0)
	FS-TM	DL (10 MIN.)	DL (10 MIN.)
21	POS-RX	DL (0)	DL (0)
	POS-TM	DL (0)	DL (0)
22	AR-RX	DL (0)	DL (0)
	AR-TM	DL (10 MIN.)	DL (10 MIN.)
47	ATO-RX	UP	UP
48	PF-ENA	'dn'	'dn'

AX ADJUSTMENTS

NO.	ABBREVIATION	AX 1	AX 2	AX 3
1	TK-ASN	1	2	
2	OF-TK1	0'	NA	
3	OF-TK2	NA	0'	
4	WT	30 SEC.	30 SEC.	
5	MD-RST	(0)	(0)	
6	CW/MD	'C'	'C'	
7	CJ-LOS	DL (0)	DL (0)	
8	PJ-DET	DL (15 SEC.)	DL (15 SEC.)	
9	PJ-RX	DL (15)	DL (15)	
10	POS-ST	'dn'	'dn'	

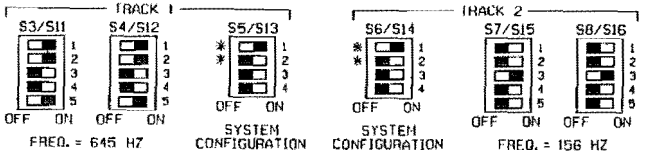

NOTES: FOR S5/S13 AND S6/S14

*1.) ACTUATOR 1 SELECTS NORMAL APPROACH WHEN SET TO ON POSITION.

*2.) WITH ACTUATOR 1 IN OFF POSITION ACTUATOR 2 SELECTS SHORT APPROACH WHEN OFF AND SELECTS VERY SHORT WHEN ON.

3.) ACTUATOR 3 OFF SELECTS HXP OPERATION.

4.) ACTUATOR 4 OFF = NORMAL MUX TABLE
ACTUATOR 4 ON = ALTERNATE MUX TABLE

SWITCH INFORMATION

SWITCH	TRACK 1	TRACK 2
MASTER/SLAVE	MASTER	MASTER
RSI FAULT JUMPER	0	0
RSI-LOS JUMPER	1	1
TLM W1 JUMPER	PINS 1-2	
TLM W2 JUMPER	PINS 1-2	
TLM W3 JUMPER	PINS 2-3	
MINUTE TIMEOUT	5 MIN	
CW/MD	CW	
STANDBY/AUTO/NORMAL	AUTO	

NOTES: DL= DEFAULT LEVEL
NA= NON APPLICABLE

ALL NEW

BURLINGTON NORTHERN SANTA FE RAILWAY

A-HXP-3R2 PROGRAM INFORMATION
AIRPORT ROAD SAVANNA, IL

DESIGNED 03-05-10
NEW KING AIRPORT ROAD
XRL/JNE SEQ.# 42335

LS 0003 MP 137.15 SH 03 OF 17

PLAN MUST NOT BE MODIFIED WITHOUT APPROVAL OF SIGNAL ENGINEERING COPYRIGHT 2010 BNSF RAILWAY COMPANY. ALL RIGHTS RESERVED.

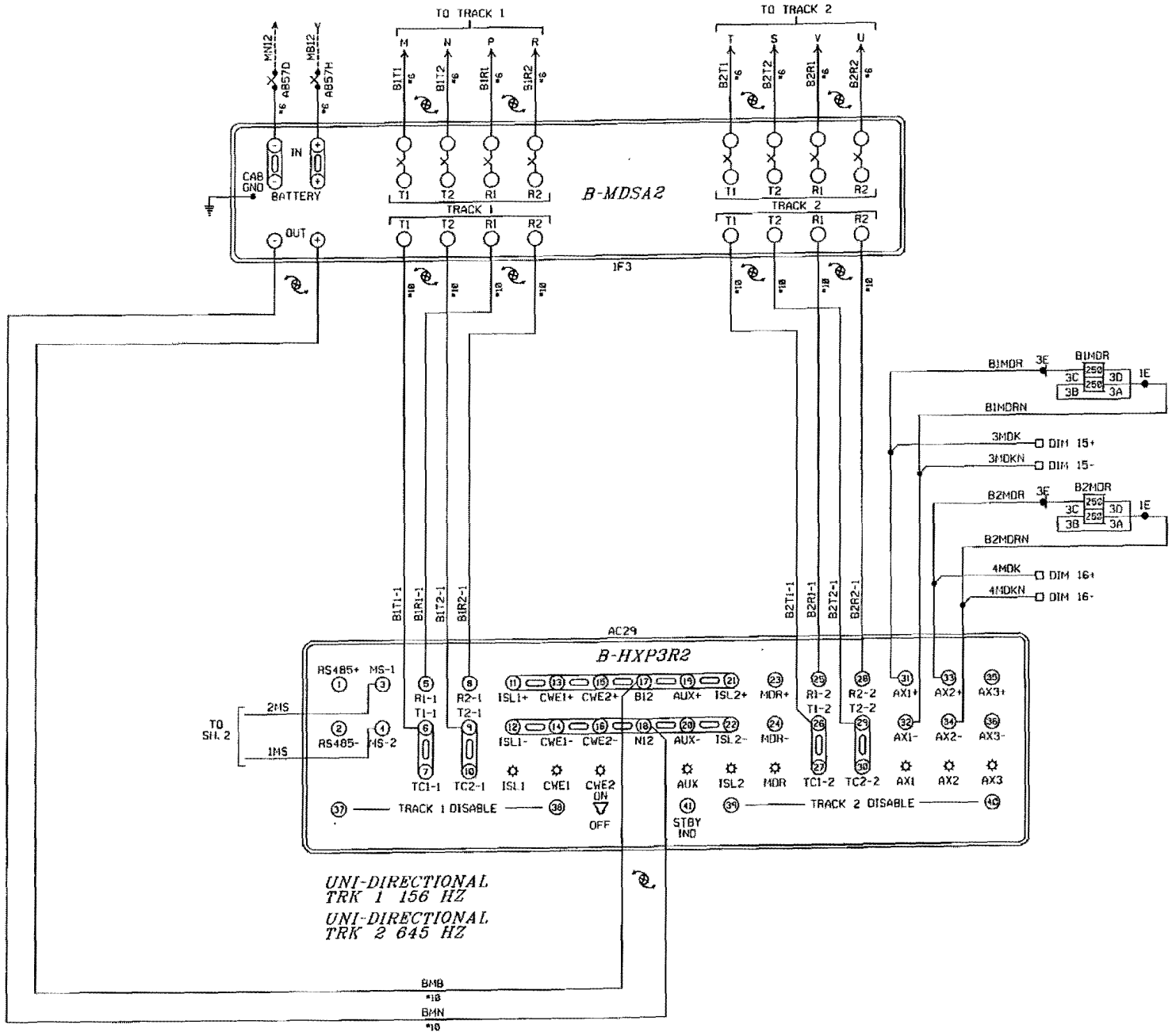

ALL NEW

BURLINGTON NORTHERN SANTA FE RAILWAY		
B-HXP-3R2 TRACK CIRCUITS AIRPORT ROAD SAVANNA, IL		
LS 0003	MP 137.15	SH 04 OF 17

PLAN MUST NOT BE MODIFIED WITHOUT APPROVAL OF SIGNAL ENGINEERING COPYRIGHT 2010 BNSF RAILWAY COMPANY. ALL RIGHTS RESERVED.

PROGRAM INFORMATION

PROGRAM VERSION 42.0 OR LATER

*=FIELD ADJUSTMENT TO BE MADE ACCORDING TO THE HXP-3 INSTRUCTION MANUAL 100052-001 ADO & SUPPLEMENTS.

HXP-3R2 ADJUST SELECT ADJUSTMENTS

NO.	ADJUSTMENT NAME	TRACK 1	TRACK 2
1	APPROACH LENGTH	2693'	948'
2	WARNING TIME	30 SEC.	30 SEC.
3	LIA	*	*
4	TC	*	*
5	MD RESTART	*	*

NOTE:

BEFORE PROGRAMMING ANY PARAMETERS/OPTIONS FOR THE HXP GO TO 'OPTION 49' AND RESET ALL LOCAL PARAMETERS TO FACTORY DEFAULT VALUES. SEE HXP-3 MANUAL 100052-001 ADO PAGE 4-14.

OPTION ADJUSTMENTS

NO.	ABBREVIATION	TRACK 1	TRACK 2
1	TK-ENA	'UP'	'UP'
2	TK FD	156 HZ	645 HZ
3	CW/MD	'C'	'C'
4	UNI-BI	'u' (UNI)	'u' (UNI)
5	NBS-C	* RX	* RX
		* FEET	* FEET
6	CWEWT	DL (80 SEC.)	DL (80 SEC.)
7	LOS	DL (16 SEC.)	DL (16 SEC.)
8	IJ-LOS	DL (5 SEC.)	DL (5 SEC.)
9	BC	*	*
10	P-COMP	*	*
11	AX1	SEE AX ADJ.	SEE AX ADJ.
12	AX2	SEE AX ADJ.	SEE AX ADJ.
13	AX3	SEE AX ADJ.	SEE AX ADJ.
17	MDR-AX/OF-TK	0'	0'
	CJ-LOS	DL (0)	DL (0)
	PJ-DET	DL (15 SEC.)	DL (15 SEC.)
	PJ-RX	DL (15)	DL (15)
18	MD-TMR	DL (10 MIN.)	DL (10 MIN.)
19	MIN-WT	DL (0)	DL (0)
20	FS-RX	DL (0)	DL (0)
	FS-TM	DL (10 MIN.)	DL (10 MIN.)
21	POS-RX	DL (0)	DL (0)
	POS-TM	DL (0)	DL (0)
22	AR-RX	DL (0)	DL (0)
	AR-TM	DL (10 MIN.)	DL (10 MIN.)
47	ATO-RX	UP	UP
48	PF-ENA	'dn'	'dn'

AX ADJUSTMENTS

NO.	ABBREVIATION	AX 1	AX 2	AX 3
1	TK-ASN	1	2	
2	OF-TK1	299'	NA	
3	OF-TK2	NA	299'	
4	WT	30 SEC.	30 SEC.	
5	MD-RST	(0)	(0)	
6	CW/MD	'C'	'C'	
7	CJ-LOS	DL (0)	DL (0)	
8	PJ-DET	DL (15 SEC.)	DL (15 SEC.)	
9	PJ-RX	DL (15)	DL (15)	
10	POS-ST	'dn'	'dn'	

SWITCH INFORMATION

SWITCH	TRACK 1	TRACK 2
MASTER/SLAVE	SLAVE	SLAVE
RSI FAULT JUMPER	0	0
RSI-LOS JUMPER	1	1
TLM W1 JUMPER	PINS 1-2	
TLM W2 JUMPER	PINS 2-3	
TLM W3 JUMPER	PINS 2-3	
MINUTE TIMEOUT	5 MIN	
CW/MD	CW	
STANDBY/AUTO/NORMAL	AUTO	

NOTES: DL= DEFAULT LEVEL
NA= NON APPLICABLE

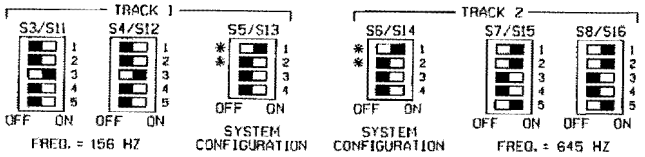

NOTES: FOR S5/S13 AND S6/S14

*1.) ACTUATOR 1 SELECTS NORMAL APPROACH WHEN SET TO ON POSITION.

*2.) WITH ACTUATOR 1 IN OFF POSITION ACTUATOR 2 SELECTS SHORT APPROACH WHEN OFF AND SELECTS VERY SHORT WHEN ON.

3.) ACTUATOR 3 OFF SELECTS HXP OPERATION.

4.) ACTUATOR 4 OFF = NORMAL MUX TABLE
ACTUATOR 4 ON = ALTERNATE MUX TABLE

ALL NEW

BURLINGTON NORTHERN SANTA FE RAILWAY

B-HXP-3R2 PROGRAM INFORMATION
AIRPORT ROAD SAVANNA, IL

DESIGNED 03-05-10
NEW 2010 AIRPORT ROAD
XRL/JRE DGN.# 42305

LS 0003 MP 137.15 SH 05 OF 17

PLAN MUST NOT BE MODIFIED WITHOUT APPROVAL OF SIGNAL ENGINEERING

COPYRIGHT 2010 BNSF RAILWAY COMPANY. ALL RIGHTS RESERVED.

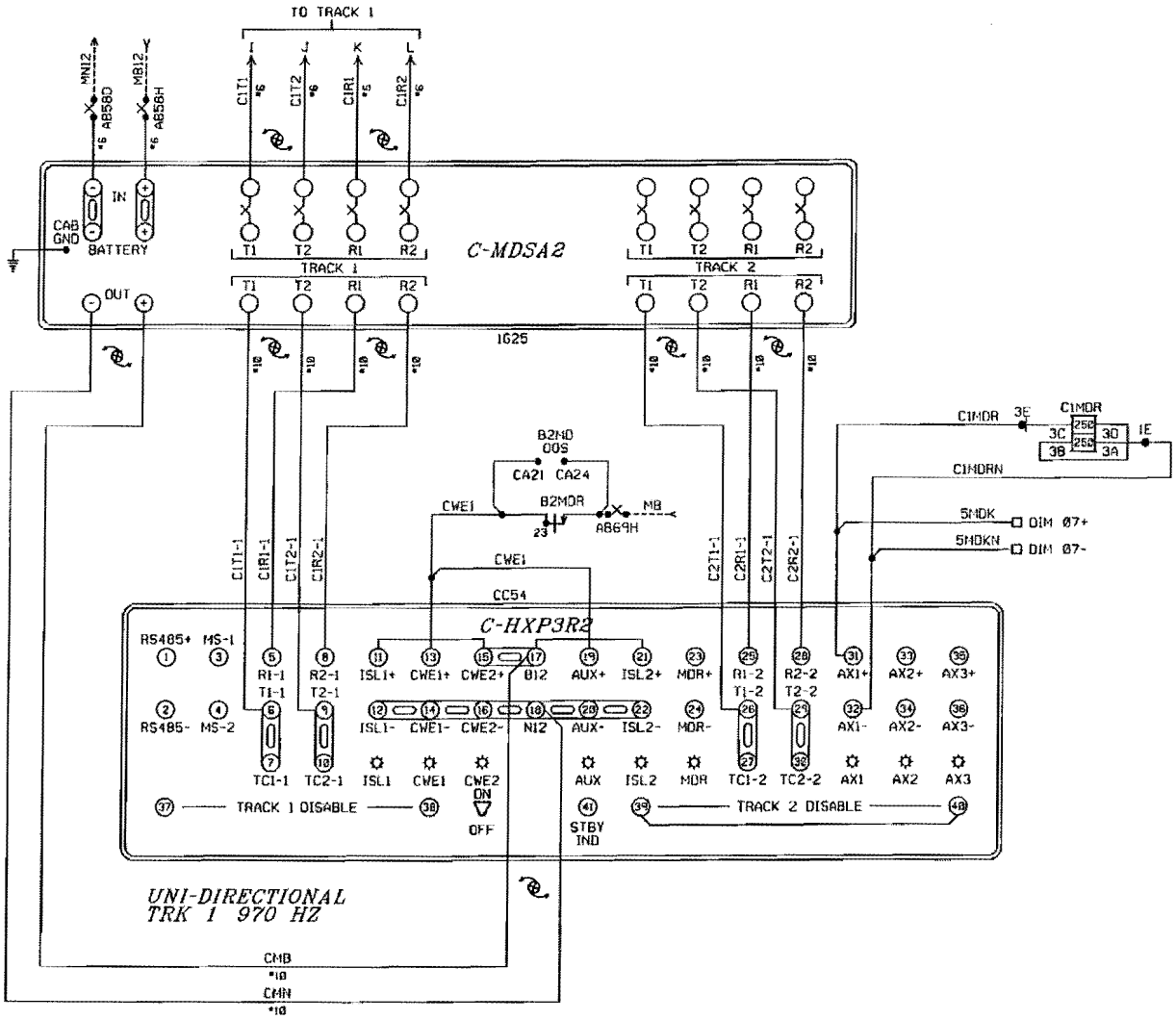

DO NOT INSTALL PERMANENT STRAP
OR TEST LINK FOR OOS TERMINALS.

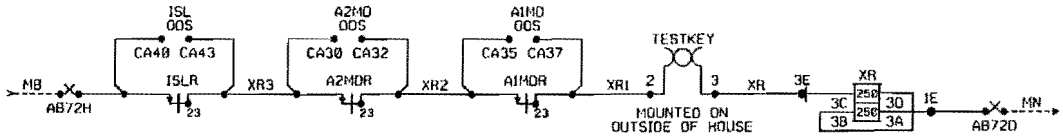

ALL NEW

BURLINGTON NORTHERN SANTA FE RAILWAY

C-HXP-3R2 TRACK CIRCUITS
AIRPORT ROAD SAVANNA, IL

						DESIGNED 01-05-10 REV XING AIRPORT ROAD XRL/JRS SCD # 42303	LS 0003	MP 137.15	SH 06 OF 17

PLAN MUST NOT BE MODIFIED WITHOUT APPROVAL OF SIGNAL ENGINEERING COPYRIGHT 2010 BNSF RAILWAY COMPANY. ALL RIGHTS RESERVED.

PROGRAM INFORMATION

PROGRAM VERSION 42.0 OR LATER

*=FIELD ADJUSTMENT TO BE MADE ACCORDING TO THE HXP-3 INSTRUCTION MANUAL 100052-001 ADO & SUPPLEMENTS.

HXP-3R2 ADJUST SELECT ADJUSTMENTS

NO.	ADJUSTMENT NAME	TRACK 1	TRACK 2
1	APPROACH LENGTH	249'	NA
2	WARNING TIME	30 SEC.	NA
3	LIA	*	*
4	TC	*	*
5	MO RESTART	*	*

NOTE:

BEFORE PROGRAMMING ANY PARAMETERS/OPTIONS FOR THE HXP GO TO 'OPTION 49' AND RESET ALL LOCAL PARAMETERS TO FACTORY DEFAULT VALUES. SEE HXP-3 MANUAL 100052-001 ADO PAGE 4-14.

OPTION ADJUSTMENTS

NO.	ABBREVIATION	TRACK 1	TRACK 2
1	TK-ENA	'UP'	'dn'
2	TK FO	970 HZ	NA
3	CW/MO	'C'	NA
4	UNI-BI	'u' (UNI)	NA
5	NBS-C	* RX	* RX
		* FEET	* FEET
6	CWEWT	DL (80 SEC.)	DL (80 SEC.)
7	LOS	DL (16 SEC.)	DL (16 SEC.)
8	IJ-LOS	DL (5 SEC.)	DL (5 SEC.)
9	BC	*	*
10	P-COMP	*	*
11	AX1	SEE AX ADJ.	SEE AX ADJ.
12	AX2	SEE AX ADJ.	SEE AX ADJ.
13	AX3	SEE AX ADJ.	SEE AX ADJ.
17	MOR-AX/OF-TK	0'	0'
	CJ-LOS	DL (0)	DL (0)
	PJ-DET	DL (15 SEC.)	DL (15 SEC.)
	PJ-RX	DL (15)	DL (15)
18	MO-TMR	DL (10 MIN.)	DL (10 MIN.)
19	MIN-WT	DL (0)	DL (0)
20	FS-RX	DL (0)	DL (0)
	FS-TM	DL (10 MIN.)	DL (10 MIN.)
21	POS-RX	DL (0)	DL (0)
	POS-TM	DL (0)	DL (0)
22	AR-RX	DL (0)	DL (0)
	AR-TM	DL (10 MIN.)	DL (10 MIN.)
47	ATO-RX	UP	UP
48	PF-ENA	'dn'	'dn'

AX ADJUSTMENTS

NO.	ABBREVIATION	AX 1	AX 2	AX 3
1	TK-ASN	1		
2	OF-TK1	50'		
3	OF-TK2	NA		
4	WT	30 SEC.		
5	MO-RST	(0)		
6	CW/MO	'C'		
7	CJ-LOS	DL (0)		
8	PJ-DET	DL (15 SEC.)		
9	PJ-RX	DL (15)		
10	POS-ST	'dn'		

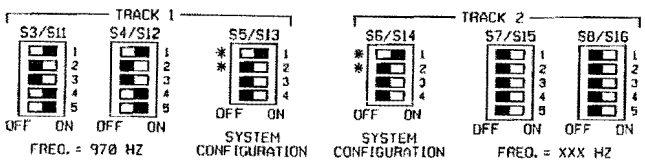

NOTES: FOR S5/S13 AND S6/S14

*1.) ACTUATOR 1 SELECTS NORMAL APPROACH WHEN SET TO ON POSITION.

*2.) WITH ACTUATOR 1 IN OFF POSITION ACTUATOR 2 SELECTS SHORT APPROACH WHEN OFF AND SELECTS VERY SHORT WHEN ON.

3.) ACTUATOR 3 OFF SELECTS HXP OPERATION.

4.) ACTUATOR 4 OFF = NORMAL MUX TABLE
ACTUATOR 4 ON = ALTERNATE MUX TABLE

SWITCH INFORMATION

SWITCH	TRACK 1	TRACK 2
MASTER/SLAVE	MASTER	NA
RSI FAULT JUMPER	0	NA
RSI-LOS JUMPER	1	NA
TLM W1 JUMPER	PINS 1-2	
TLM W2 JUMPER	PINS 2-3	
TLM W3 JUMPER	PINS 2-3	
MINUTE TIMEOUT	5 MIN	
CW/MO	CW	
STANDBY/AUTO/NORMAL	AUTO	

NOTES: DL= DEFAULT LEVEL
NA= NON APPLICABLE

ALL NEW

BURLINGTON NORTHERN SANTA FE RAILWAY

C-HXP-3R2 PROGRAM INFORMATION
AIRPORT ROAD SAVANNA, IL

DESIGNED 03-05-10 NEW XING AIRPORT ROAD XRL/JRE SEC.# 42303

LS 0003 MP 137.15 SH 07 OF 17

0003137_15x07c..dgn March 05, 2010

PLAN MUST NOT BE MODIFIED WITHOUT APPROVAL OF SIGNAL ENGINEERING

COPYRIGHT 2010 BNSF RAILWAY COMPANY. ALL RIGHTS RESERVED.

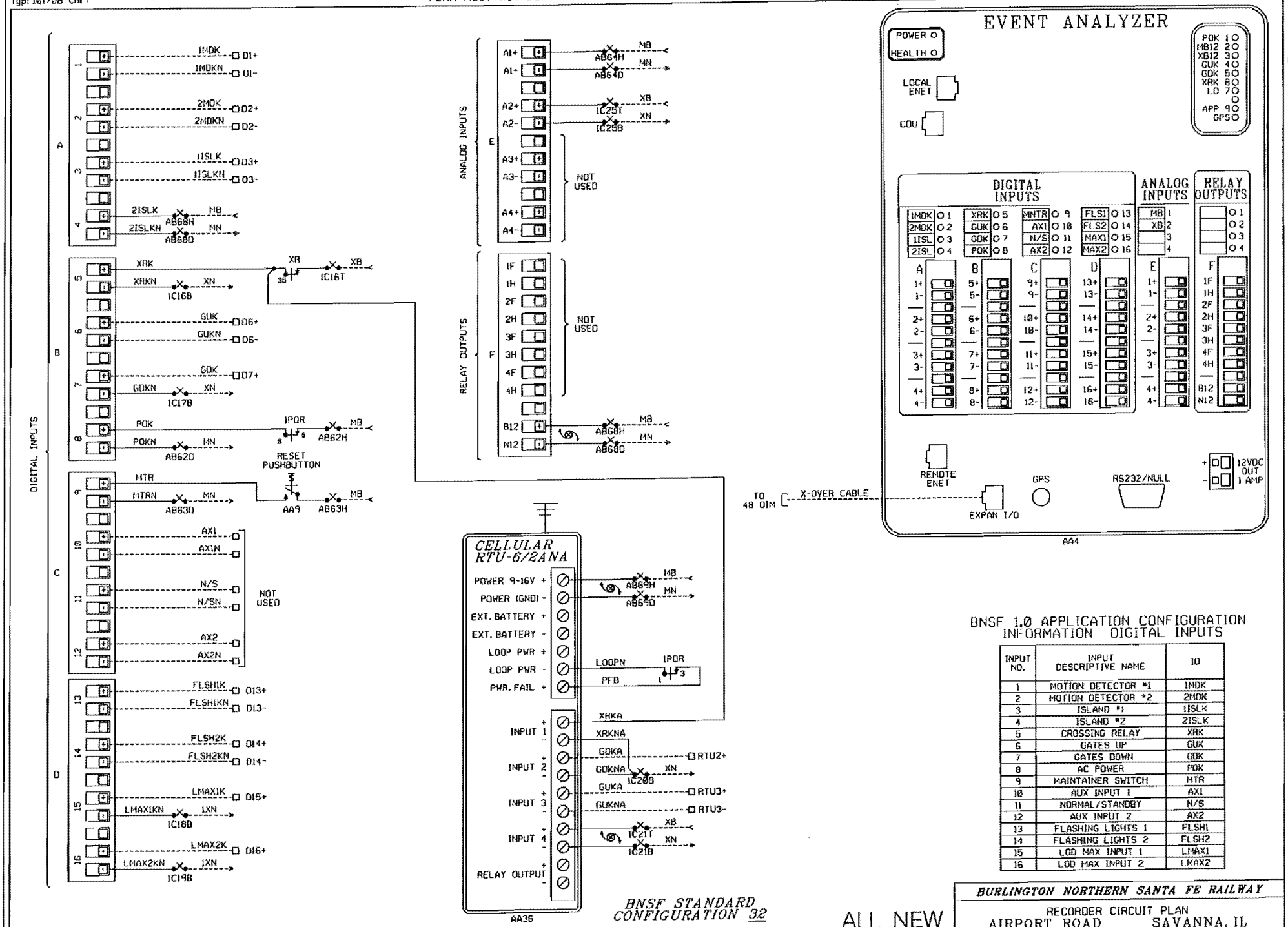

BNSF 1.0 APPLICATION CONFIGURATION INFORMATION DIGITAL INPUTS

INPUT NO.	INPUT DESCRIPTIVE NAME	ID
1	MOTION DETECTOR #1	1MDK
2	MOTION DETECTOR #2	2MDK
3	ISLAND #1	1ISLK
4	ISLAND #2	2ISLK
5	CROSSING RELAY	XRK
6	GATES UP	GUK
7	GATES DOWN	GDK
8	AC POWER	POK
9	MAINTAINER SWITCH	MTR
10	AUX INPUT 1	AX1
11	NORMAL/STANDBY	N/S
12	AUX INPUT 2	AX2
13	FLASHING LIGHTS 1	FLSH1
14	FLASHING LIGHTS 2	FLSH2
15	LOD MAX INPUT 1	LMAX1
16	LOD MAX INPUT 2	LMAX2

ALL NEW

BURLINGTON NORTHERN SANTA FE RAILWAY

RECORDER CIRCUIT PLAN
AIRPORT ROAD SAVANNA, IL

DESIGNED 03-05-10 NEW XING AIRPORT ROAD XRL/JAE DESIGN 42305

LS 0003 | MP 137.15 | SH 08 OF 17

PLAN MUST NOT BE MODIFIED WITHOUT APPROVAL OF SIGNAL ENGINEERING COPYRIGHT 2010 BNSF RAILWAY COMPANY. ALL RIGHTS RESERVED.

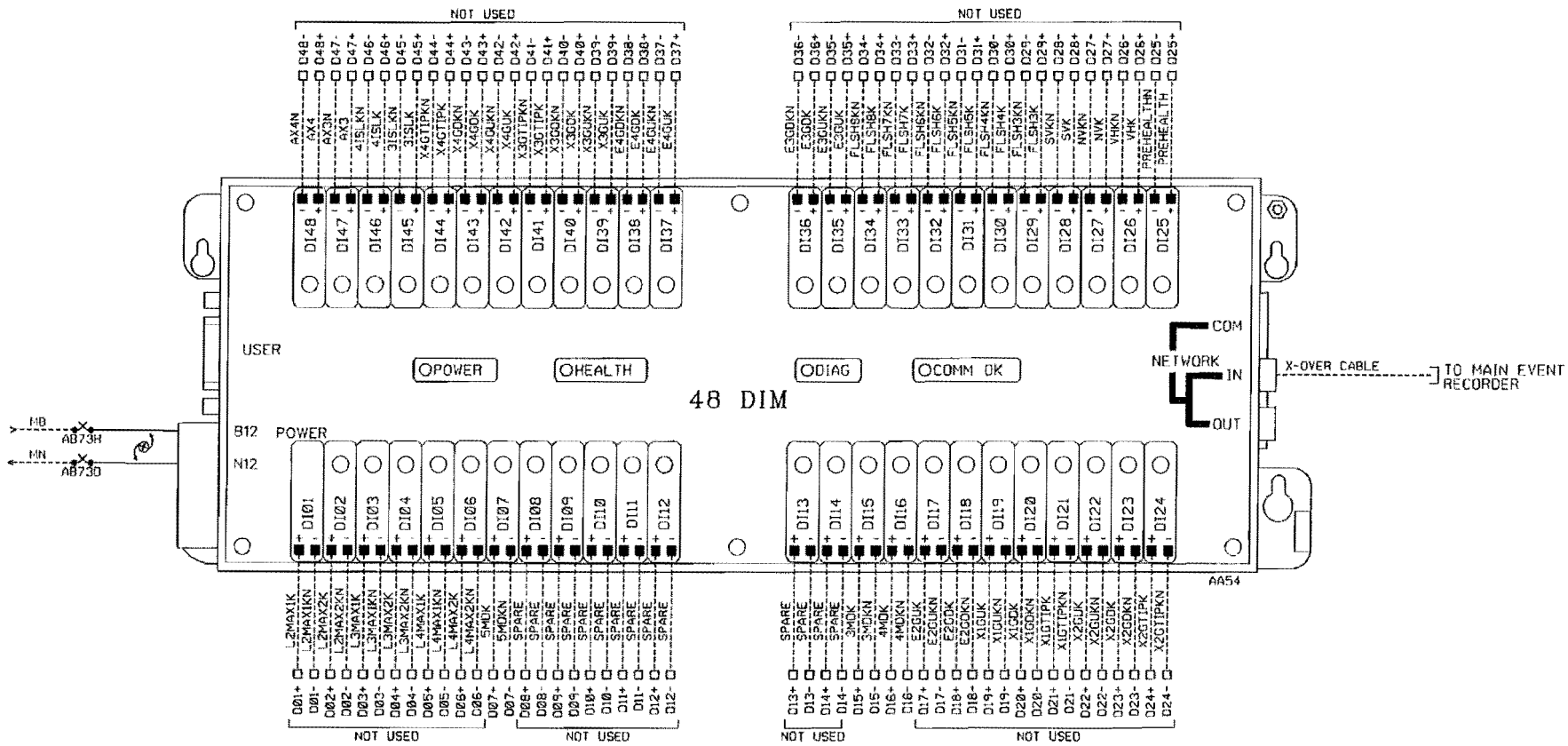

INPUT NO.	INPUT DESCRIPTIVE NAME	ID
1	LOD2 Max Input 1	L2MAX1K
2	LOD2 Max Input 2	L2MAX2K
3	LOD3 Max Input 1	L3MAX1K
4	LOD3 Max Input 2	L3MAX2K
5	LOD4 Max Input 1	L4MAX1K
6	LOD4 Max Input 2	L4MAX2K
7	* Motion Detect #5	5MDK
8	* Spare	Spare
9	* Spare	Spare
10	* Spare	Spare
11	* Spare	Spare
12	* Spare	Spare
13	* Spare	Spare
14	* Spare	Spare
15	Motion Detect #3	3MDK
16	Motion Detect #4	4MDK

INPUT NO.	INPUT DESCRIPTIVE NAME	ID
17	Entrance 2 Gate Up	E2GUK
18	Entrance 2 Gate Down	E2GDK
19	Exit 1 Gate Up	X1GUK
20	Exit 1 Gate Down	X1GDK
21	Exit 1 Gate Tip	X1GTIPK
22	Exit 2 Gate Up	X2GUK
23	Exit 2 Gate Down	X2GDK
24	Exit 2 Gate Tip	X2GTIPK
25	Preempt	PREHLTH
26	Vehicle Health	VHK
27	Northbound Vehicle	NVK
28	Southbound Vehicle	SVK
29	Flashing Light Input 3	FLSH3K
30	Flashing Light Input 4	FLSH4K
31	Flashing Light Input 5	FLSH5K
32	Flashing Light Input 6	FLSH6K

INPUT NO.	INPUT DESCRIPTIVE NAME	ID
33	Flashing Light Input 7	FLSH7K
34	Flashing Light Input 8	FLSH8K
35	Entrance 3 Gate Up	E3GUK
36	Entrance 3 Gate Down	E3GDK
37	Entrance 4 Gate Up	E4GUK
38	Entrance 4 Gate Down	E4GDK
39	Exit 3 Gate Up	X3GUK
40	Exit 3 Gate Down	X3GDK
41	Exit 3 Gate Tip	X3GTIPK
42	Exit 4 Gate Up	X4GUK
43	Exit 4 Gate Down	X4GDK
44	Exit 4 Gate Tip	X4GTIPK
45	Island #3	3ISLK
46	Island #4	4ISLK
47	Auxiliary Drive #3	AX3
48	Auxiliary Drive #4	AX4

* = USER DEFINEABLE SPARE INPUT
ALL OTHERS DEFINED BY PROGRAM, DO NOT CHANGE

ALL NEW

BURLINGTON NORTHERN SANTA FE RAILWAY

DIM-48 RECORDER MODULE
AIRPORT ROAD SAVANNA, IL

DESIGNED 03-05-10
NEW XING AIRPORT ROAD
XALVJRE SEQ.# 42305

LS 0003 MP 137.15 SH 09 OF 17

PLAN MUST NOT BE MODIFIED WITHOUT APPROVAL OF SIGNAL ENGINEERING COPYRIGHT 2010 BNSF RAILWAY COMPANY. ALL RIGHTS RESERVED.

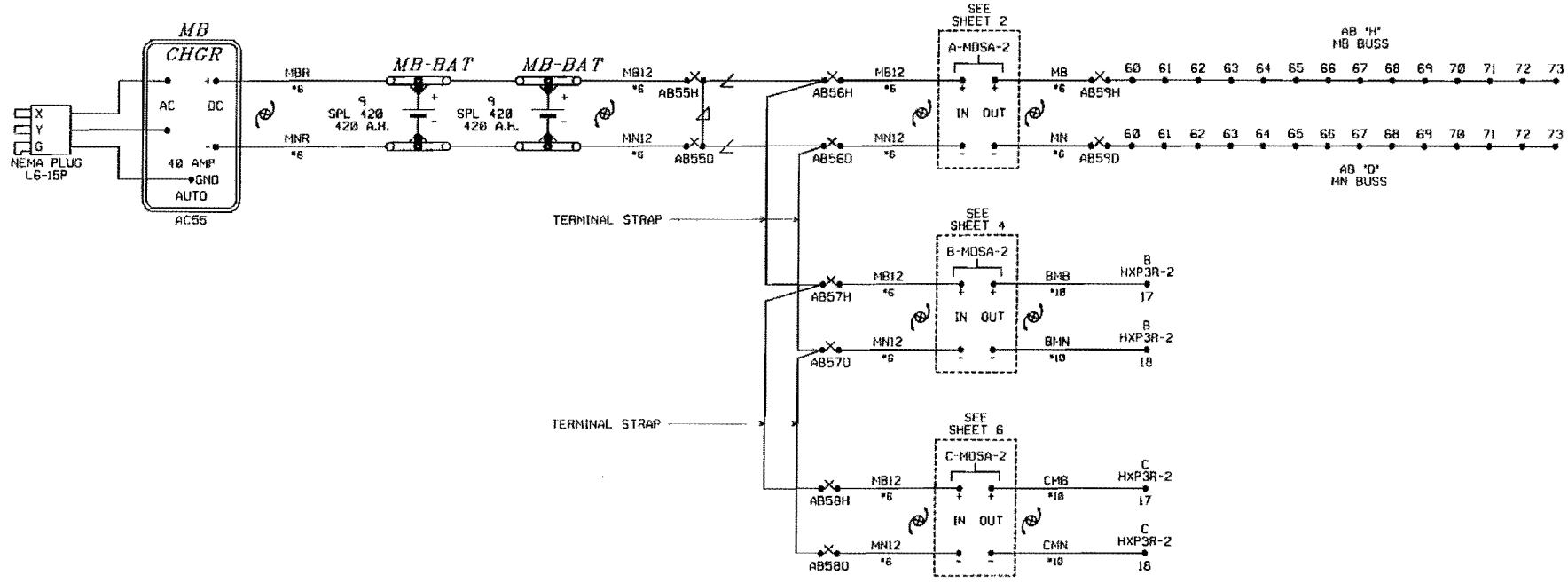

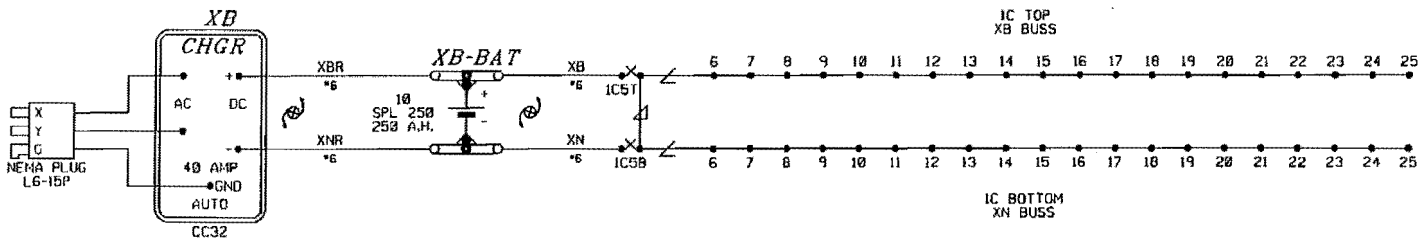

ALL NEW

BURLINGTON NORTHERN SANTA FE RAILWAY

BATTERY CIRCUIT PLAN
AIRPORT ROAD SAVANNA, IL

DESIGNED 03-05-10
NEW XING AIRPORT ROAD
KRL/JRE SEQ.# 42395

LS 0003 | MP 137.15 | SH 10 OF 17

PLAN MUST NOT BE MODIFIED WITHOUT APPROVAL OF SIGNAL ENGINEERING COPYRIGHT 2010 BNSF RAILWAY COMPANY. ALL RIGHTS RESERVED.

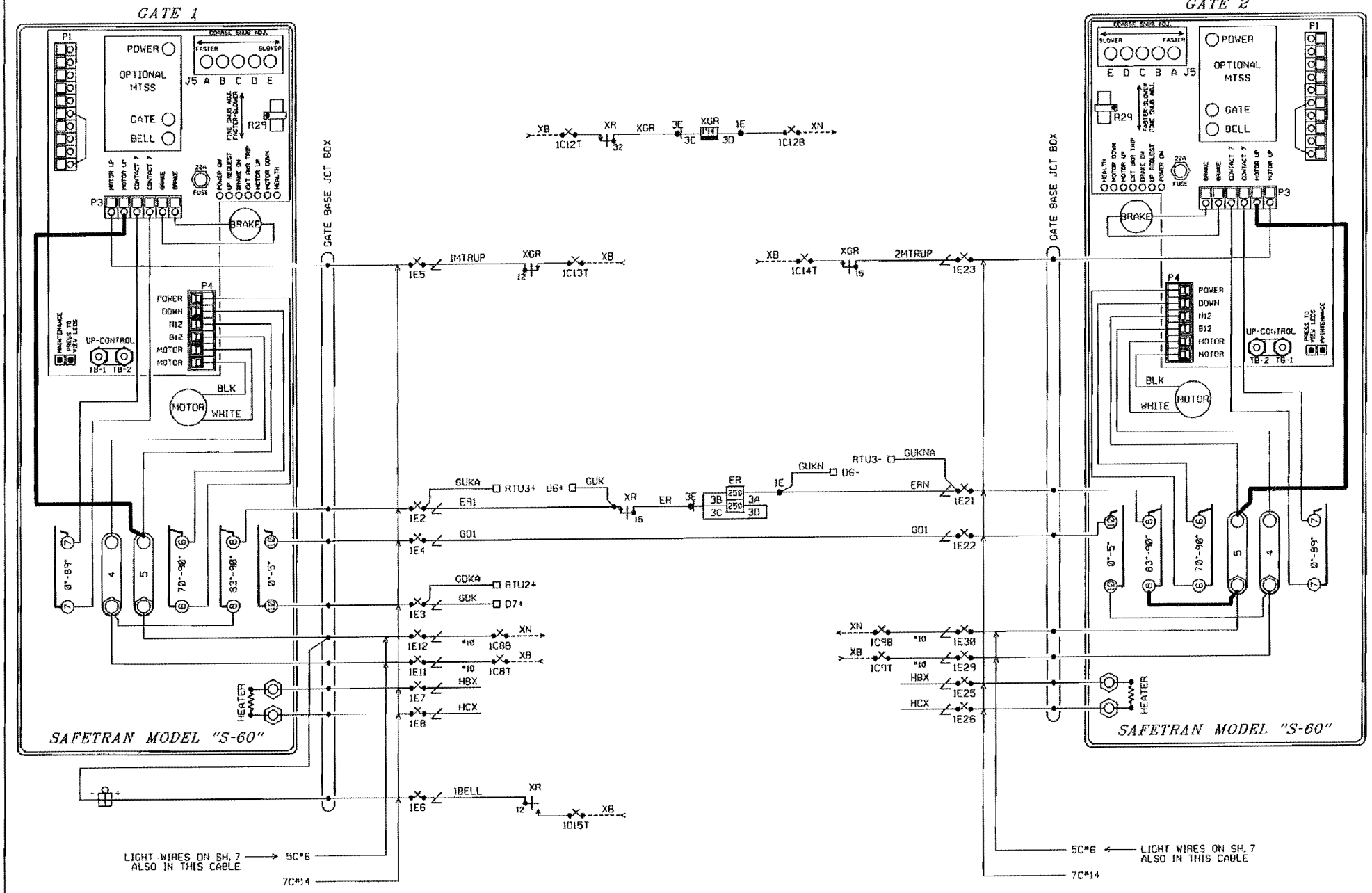

NOTES:
1. ADD JUMPERS IN GATE SHOWN IN BOLD.
2. MAXIMUM WIRE SIZE FOR TERMINAL 5 TO MOTOR UP CONTROL (-) IS #12 AWG.

ALL NEW

BURLINGTON NORTHERN SANTA FE RAILWAY		
GATE CIRCUIT PLAN AIRPORT ROAD SAVANNA, IL		
LS 0003	MP 137.15	SH 11 OF 17

PLAN MUST NOT BE MODIFIED WITHOUT APPROVAL OF SIGNAL ENGINEERING COPYRIGHT 2010 BNSF RAILWAY COMPANY. ALL RIGHTS RESERVED.

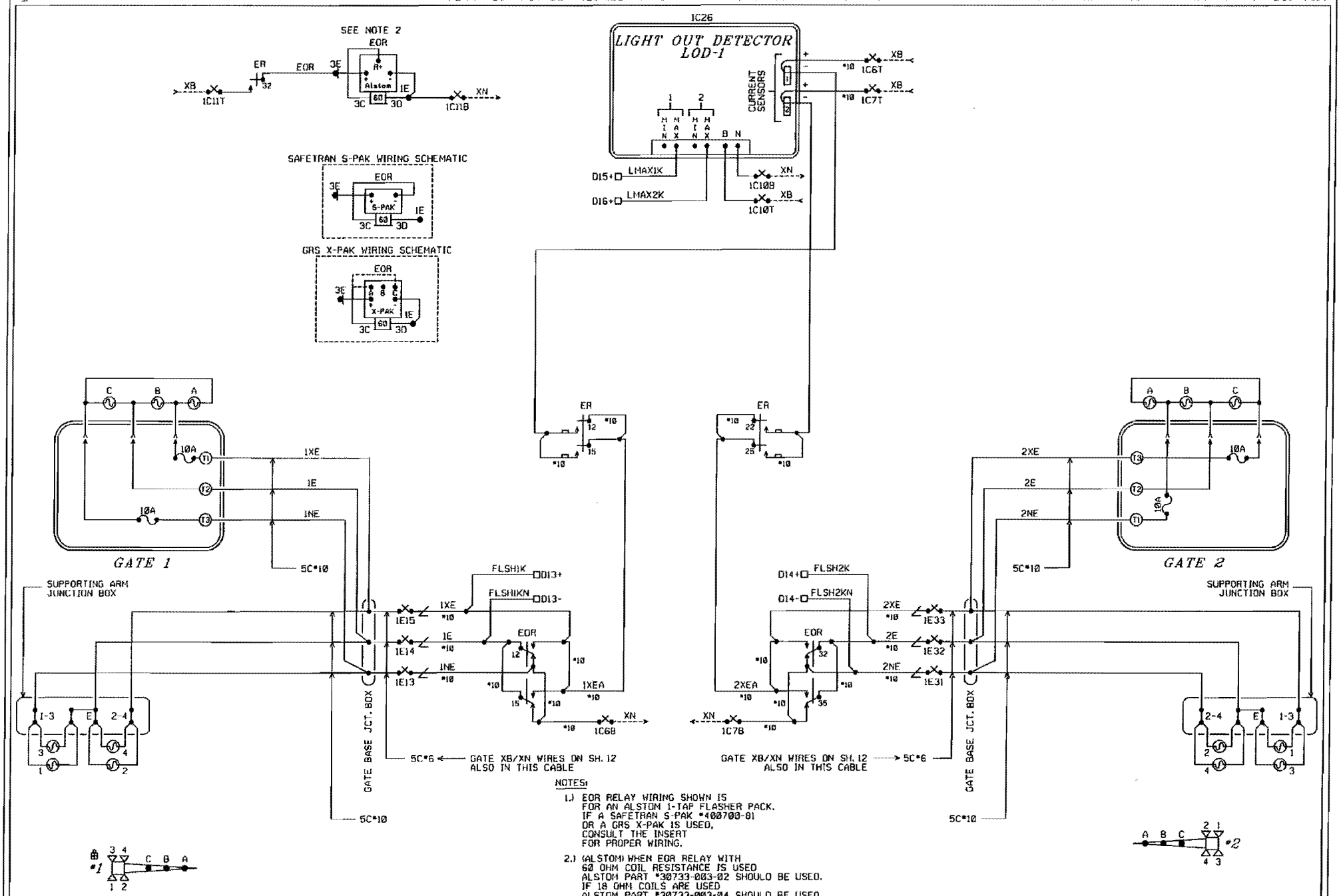

NOTES:

1.) EOR RELAY WIRING SHOWN IS FOR AN ALSTOM 1-TAP FLASHER PACK. IF A SAFETRAN S-PAK #400700-81 OR A GRS X-PAK IS USED, CONSULT THE INSERT FOR PROPER WIRING.

2.) (ALSTOM) WHEN EOR RELAY WITH 60 OHM COIL RESISTANCE IS USED ALSTOM PART #30733-003-02 SHOULD BE USED. IF 18 OHM COILS ARE USED ALSTOM PART #30733-003-04 SHOULD BE USED.

3.) (X-PAK) WHEN EOR RELAY WITH 60 OHM COIL RESISTANCE IS USED CONNECT JUMPER FROM 3C TO 'A'. IF 18 OHM COILS ARE USED CONNECT JUMPER FROM 3C TO 'C'.

4.) (S-PAK) DO NOT USE S-PAK WITH 18 OHM COILS

ALL NEW

BURLINGTON NORTHERN SANTA FE RAILWAY

FLASHER CIRCUIT PLAN
AIRPORT ROAD SAVANNA, IL

							DESIGNED 03.05.10 NEW XING AIRPORT ROAD XRL/JRE SEQ.# 42305	LS 0003	MP 137.15	SH 12 OF 17

PLAN MUST NOT BE MODIFIED WITHOUT APPROVAL OF SIGNAL ENGINEERING

COPYRIGHT 2010 BNSF RAILWAY COMPANY. ALL RIGHTS RESERVED.

NOTES:

1. USE THE FOLLOWING COLOR CODE:
   GRN - GREEN - SAFETY EQUIPMENT GROUND
   WHT - WHITE - CX110 (NEUTRAL)
   BLK - BLACK - NX220 (L2)
   RED - RED - BX220 (L1)
   EXCEPTIONS TO THE ABOVE COLOR CODE ARE THE PRE-WIRED, SEALED ARRESTOR UNITS MOUNTED ON THE BREAKER BOX WHICH HAVE TWO BLACK AND ONE WHITE WIRE EACH.
2. ■ = WIRE NUT
3. MINIMUM WIRE SIZE
   10 AMP - NO. 14 AWG THHN OR THWN SOLID
   20 AMP - NO. 12 AWG THHN OR THWN SOLID
   30 AMP - NO. 10 AWG THHN OR THWN SOLID
4. GROUND FAULT INTERRUPT (GFCI) MUST BE USED ON ALL CIRCUITS SERVING CONVENIENCE OUTLETS AND ANY EQUIPMENT OUTSIDE THE BUNGALOW. RECEPTACLE MOUNTED GFCI MAY BE USED INSTEAD OF BREAKER TYPE.
5. ISOLATION TRANSFORMER IF INSTALLED.
   OLD JUMPER WIRES BLK/YEL TO BLK/GRN WITH CX (WHT)
   JUMPER WIRES BLK TO BLK/RED WITH NX7 (BLK)
   NEW JUMPER WIRES YEL TO BRN WITH CX (WHT)
   JUMPER WIRES BLK TO BLU WITH NX7 (BLK)
6. ALL GROUND WIRES RUN TO BREAKER BOX GROUND BUSS

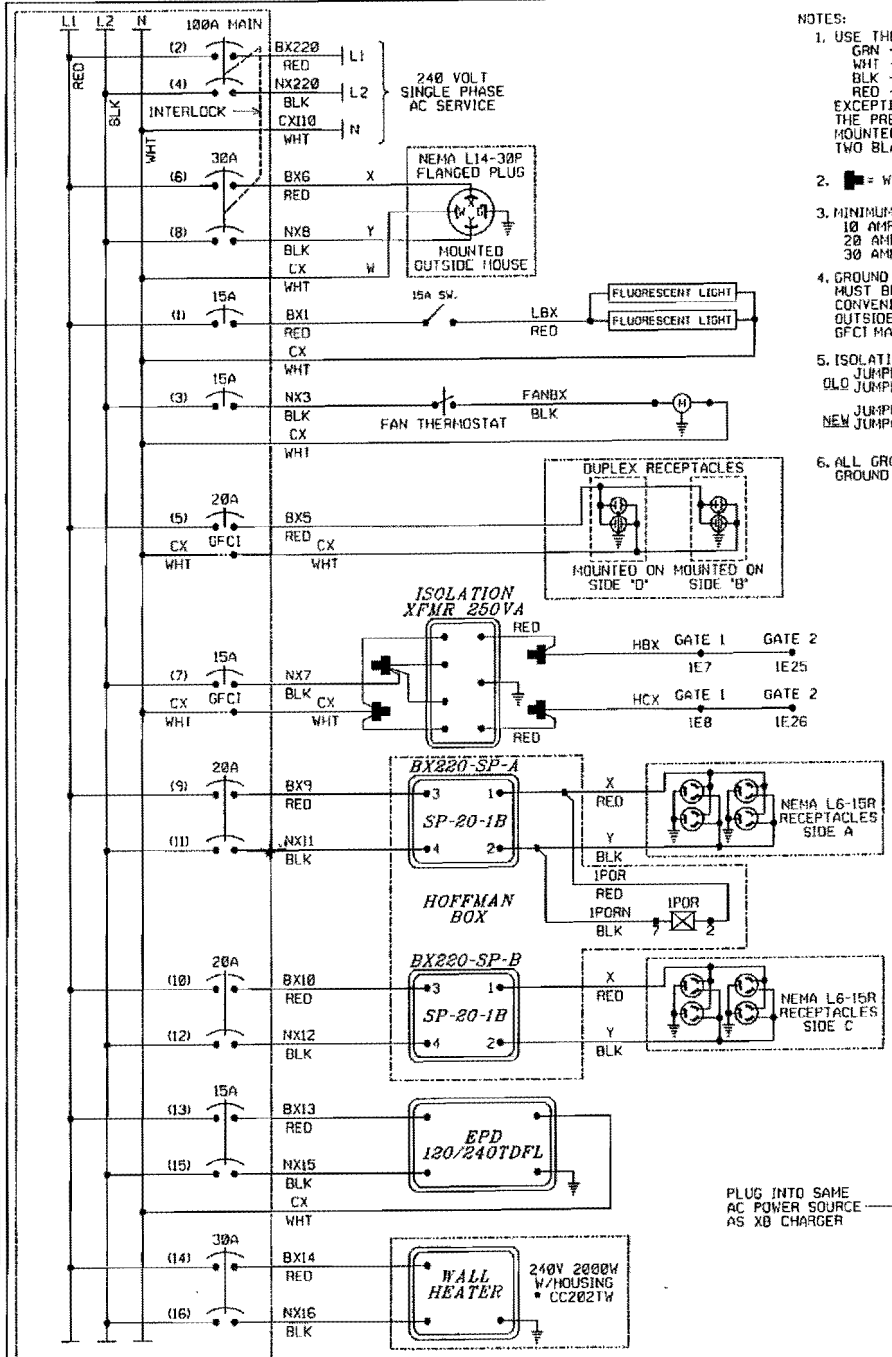

SQUARE D PART NUMBERS
BREAKER BOX: 0011GL125G
SURFACE KIT: 00C24US
GROUND KIT: PK12GTA
INTERLOCK: 002DT1

POWER OFF UNIT LAYOUT

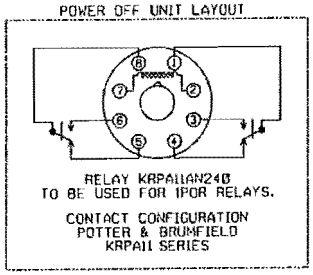

RELAY KRPA11AN24Ø
TO BE USED FOR 1POR RELAYS.

CONTACT CONFIGURATION
POTTER & BRUMFIELD
KRPA11 SERIES

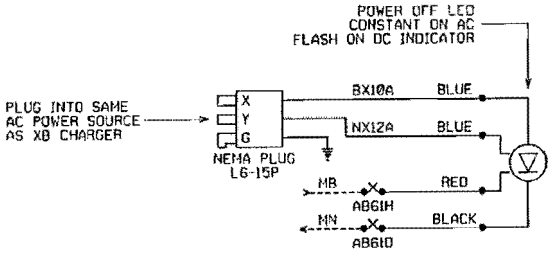

SIDE D

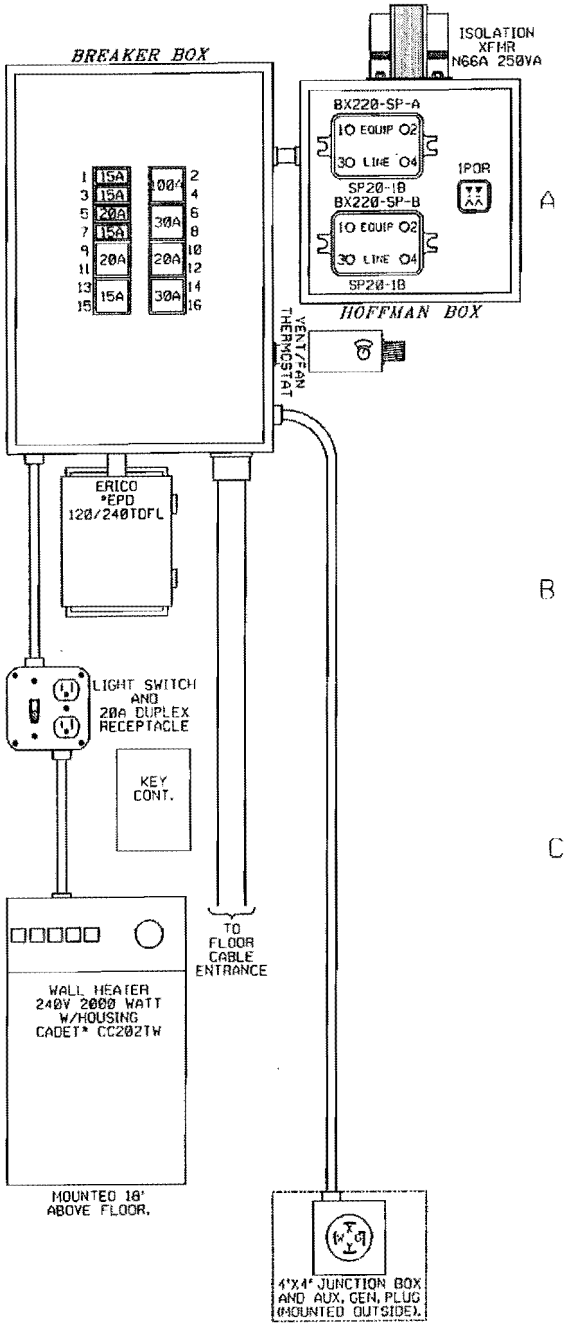

ALL NEW

BURLINGTON NORTHERN SANTA FE RAILWAY

POWER DISTRIBUTION
AIRPORT ROAD SAVANNA, IL

DESIGNED 03-05-10
NEW XING AIRPORT ROAD
XRL/JRC BED.# 42355

LS 0003 | MP 137.15 | SH 13 OF 17

PLAN MUST NOT BE MODIFIED WITHOUT APPROVAL OF SIGNAL ENGINEERING COPYRIGHT 2010 BNSF RAILWAY COMPANY. ALL RIGHTS RESERVED.

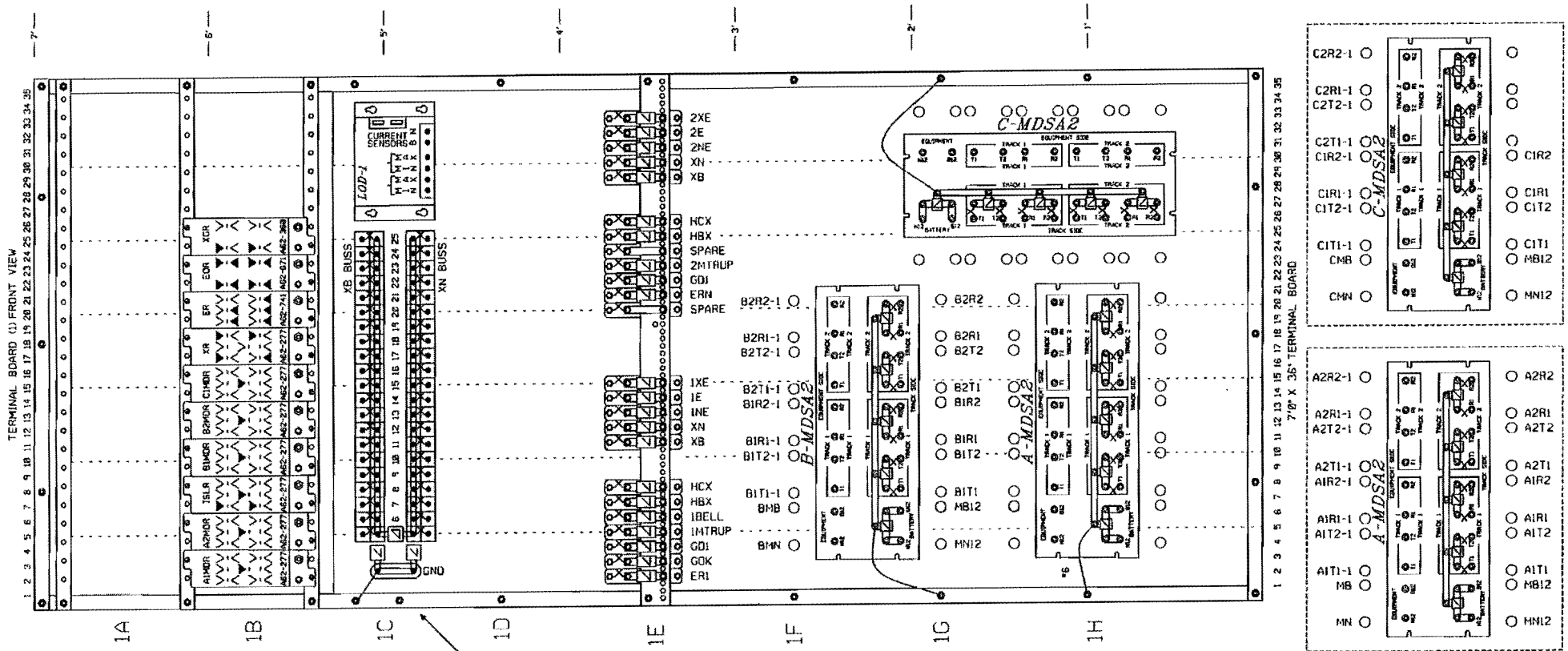

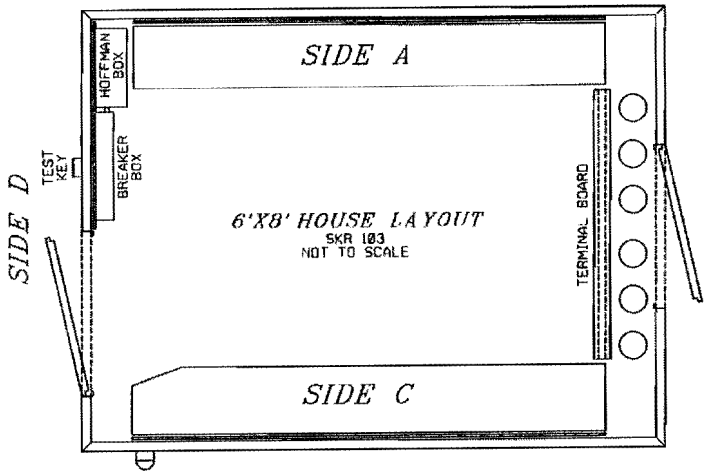

NOTE: INSTALL POWER OFF INDICATOR LIGHT ON TRACK SIDE NEAREST THE HIGHWAY AND NEAR EAVE OF HOUSE.

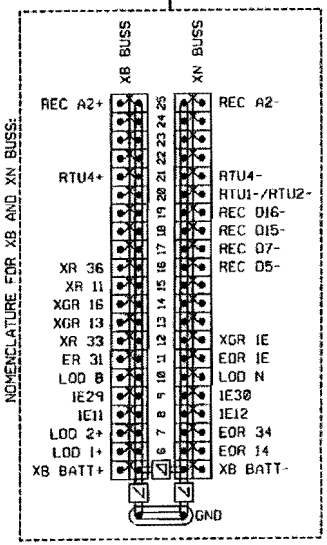

RELAY CROSS REFERENCE

GRS	SAFETRAN
A62-277	400004
A62-741	400005
A62-671	400700
A62-360	400200

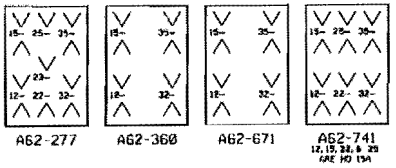

▼ = CONTACT USED

V = CONTACT NOT USED

ALL NEW

BURLINGTON NORTHERN SANTA FE RAILWAY

TERMINAL BOARD LAYOUT
AIRPORT ROAD SAVANNA, IL

DESIGNED 03-05-10
NEW XRD AIRPORT ROAD
XRD JRE SCD.# 42335

LS 0003 | MP 137.15 | SH 14 OF 17

PLAN MUST NOT BE MODIFIED WITHOUT APPROVAL OF SIGNAL ENGINEERING COPYRIGHT 2010 BNSF RAILWAY COMPANY. ALL RIGHTS RESERVED.

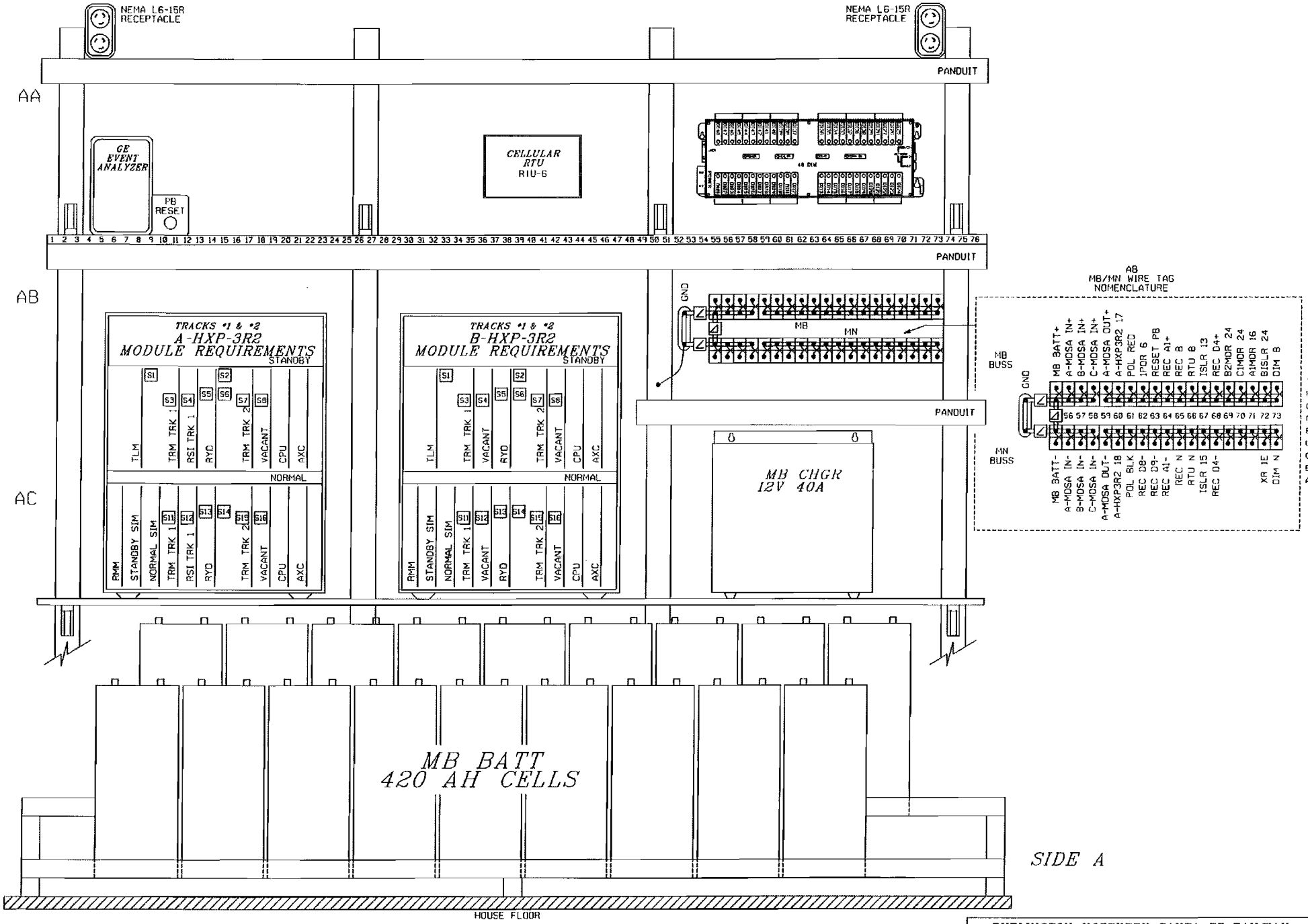

ALL NEW

BURLINGTON NORTHERN SANTA FE RAILWAY		
SIDE 'A' SHELF LAYOUT AIRPORT ROAD SAVANNA, IL		
LS 0003	MP 137.15	SH 15 OF 17

DESIGNED 03-05-10
NEW XING AIRPORT ROAD
XRL/JRE SEQ.# 42305

PLAN MUST NOT BE MODIFIED WITHOUT APPROVAL OF SIGNAL ENGINEERING COPYRIGHT 2010 BNSF RAILWAY COMPANY. ALL RIGHTS RESERVED.

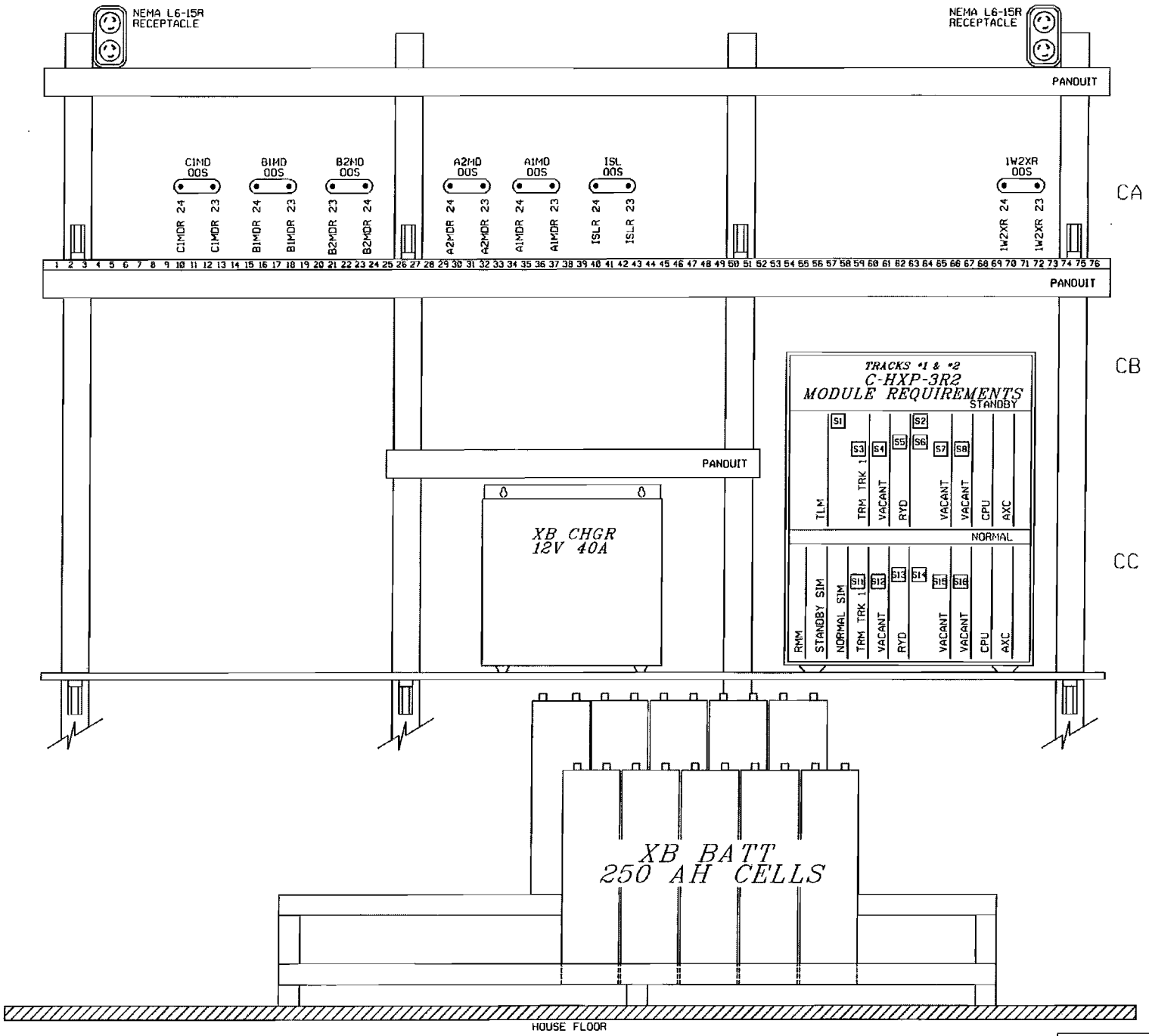

SIDE C

ALL NEW

BURLINGTON NORTHERN SANTA FE RAILWAY

SIDE 'C' SHELF LAYOUT
AIRPORT ROAD SAVANNA, IL

DESIGNED 03-05-10
NEW XING AIRPORT ROAD
XAL/JRE SEQ.# 42325

LS 0003 | MP 137.15 | SH 16 OF 17

0003137.15x16c..dgn March 05, 2010

PLAN MUST NOT BE MODIFIED WITHOUT APPROVAL OF SIGNAL ENGINEERING COPYRIGHT 2010 BNSF RAILWAY COMPANY. ALL RIGHTS RESERVED.

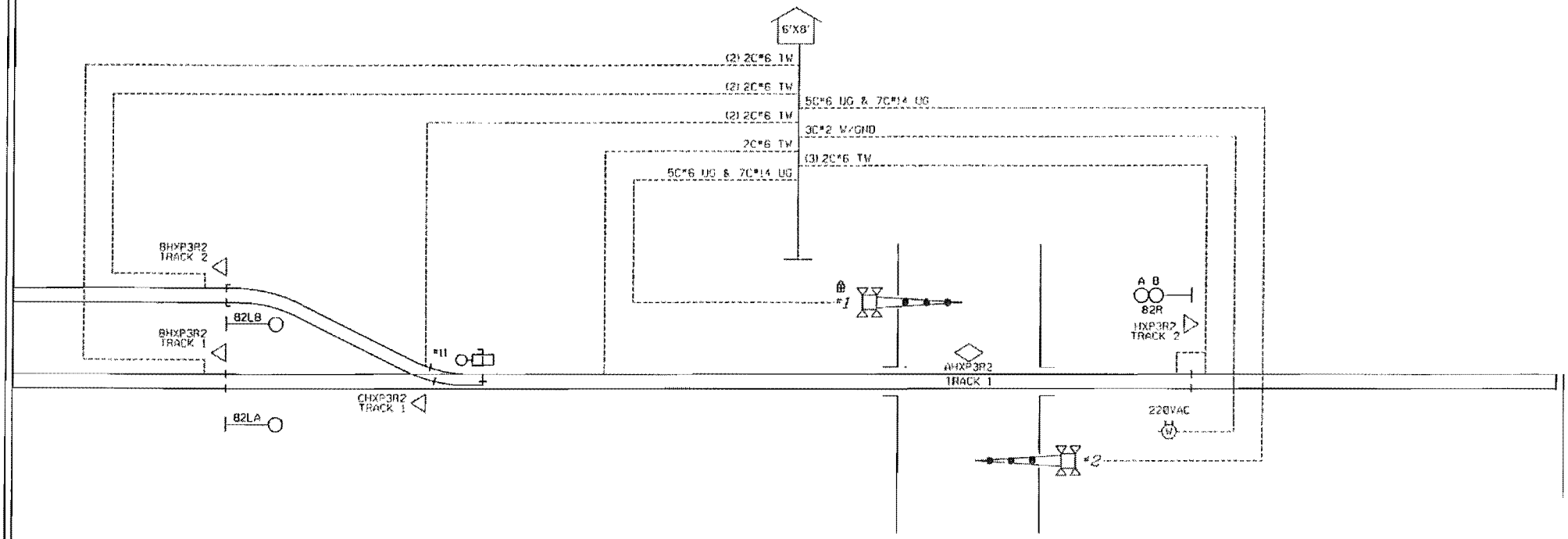

M.P. 137.15
AIRPORT ROAD
DOT # 069 895 R

BURLINGTON NORTHERN SANTA FE RAILWAY		
A-HXP-3R2 TRACK CIRCUITS AIRPORT ROAD SAVANNA, IL		
LS 0003	MP 137.15	SH 17 OF 17

DESIGNED 04-09-10
NEW 2010 AIRPORT ROAD
XSL/JRE GEO.# 42385

0003137_15x17c_.dgn March 05, 2010

RED = IN YELLOW = OUT